AUTHENTICATED
U.S. GOVERNMENT
INFORMATION
GPO

Code of Federal Regulations

26

Part 1 (§§ 1.1401 to 1.1550)

Revised as of April 1, 2006

Internal Revenue

Containing a codification of documents of general applicability and future effect

As of April 1, 2006

With Ancillaries

Published by
Office of the Federal Register
National Archives and Records
Administration

A Special Edition of the Federal Register

U.S. GOVERNMENT OFFICIAL EDITION NOTICE

Legal Status and Use of Seals and Logos

The seal of the National Archives and Records Administration (NARA) authenticates the Code of Federal Regulations (CFR) as the official codification of Federal regulations established under the Federal Register Act. Under the provisions of 44 U.S.C. 1507, the contents of the CFR, a special edition of the Federal Register, shall be judicially noticed. The CFR is prima facie evidence of the original documents published in the Federal Register (44 U.S.C. 1510).

It is prohibited to use NARA's official seal and the stylized Code of Federal Regulations logo on any republication of this material without the express, written permission of the Archivist of the United States or the Archivist's designee. Any person using NARA's official seals and logos in a manner inconsistent with the provisions of 36 CFR part 1200 is subject to the penalties specified in 18 U.S.C. 506, 701, and 1017.

Use of ISBN Prefix

This is the Official U.S. Government edition of this publication and is herein identified to certify its authenticity. Use of the 0–16 ISBN prefix is for U.S. Government Printing Office Official Editions only. The Superintendent of Documents of the U.S. Government Printing Office requests that any reprinted edition clearly be labeled as a copy of the authentic work with a new ISBN.

U.S. GOVERNMENT PRINTING OFFICE

U.S. Superintendent of Documents • Washington, DC 20402–0001

http://bookstore.gpo.gov

Phone: toll-free (866) 512-1800; DC area (202) 512-1800

Table of Contents

	Page
Explanation	v
Title 26:	
Chapter I—Internal Revenue Service, Department of the Treasury (Continued)	3
Finding Aids:	
Table of CFR Titles and Chapters	701
Alphabetical List of Agencies Appearing in the CFR	719
Table of OMB Control Numbers	729
List of CFR Sections Affected	747

Cite this Code: CFR

To cite the regulations in this volume use title, part and section number. Thus, 26 CFR 1.1401–1 *refers to title 26, part 1, section 1401–1.*

Explanation

The Code of Federal Regulations is a codification of the general and permanent rules published in the Federal Register by the Executive departments and agencies of the Federal Government. The Code is divided into 50 titles which represent broad areas subject to Federal regulation. Each title is divided into chapters which usually bear the name of the issuing agency. Each chapter is further subdivided into parts covering specific regulatory areas.

Each volume of the Code is revised at least once each calendar year and issued on a quarterly basis approximately as follows:

Title 1 through Title 16.....as of January 1
Title 17 through Title 27.....as of April 1
Title 28 through Title 41.....as of July 1
Title 42 through Title 50.....as of October 1

The appropriate revision date is printed on the cover of each volume.

LEGAL STATUS

The contents of the Federal Register are required to be judicially noticed (44 U.S.C. 1507). The Code of Federal Regulations is prima facie evidence of the text of the original documents (44 U.S.C. 1510).

HOW TO USE THE CODE OF FEDERAL REGULATIONS

The Code of Federal Regulations is kept up to date by the individual issues of the Federal Register. These two publications must be used together to determine the latest version of any given rule.

To determine whether a Code volume has been amended since its revision date (in this case, April 1, 2006), consult the ''List of CFR Sections Affected (LSA),'' which is issued monthly, and the ''Cumulative List of Parts Affected,'' which appears in the Reader Aids section of the daily Federal Register. These two lists will identify the Federal Register page number of the latest amendment of any given rule.

EFFECTIVE AND EXPIRATION DATES

Each volume of the Code contains amendments published in the Federal Register since the last revision of that volume of the Code. Source citations for the regulations are referred to by volume number and page number of the Federal Register and date of publication. Publication dates and effective dates are usually not the same and care must be exercised by the user in determining the actual effective date. In instances where the effective date is beyond the cutoff date for the Code a note has been inserted to reflect the future effective date. In those instances where a regulation published in the Federal Register states a date certain for expiration, an appropriate note will be inserted following the text.

OMB CONTROL NUMBERS

The Paperwork Reduction Act of 1980 (Pub. L. 96–511) requires Federal agencies to display an OMB control number with their information collection request.

Many agencies have begun publishing numerous OMB control numbers as amendments to existing regulations in the CFR. These OMB numbers are placed as close as possible to the applicable recordkeeping or reporting requirements.

OBSOLETE PROVISIONS

Provisions that become obsolete before the revision date stated on the cover of each volume are not carried. Code users may find the text of provisions in effect on a given date in the past by using the appropriate numerical list of sections affected. For the period before January 1, 2001, consult either the List of CFR Sections Affected, 1949–1963, 1964–1972, 1973–1985, or 1986–2000, published in 11 separate volumes. For the period beginning January 1, 2001, a ''List of CFR Sections Affected'' is published at the end of each CFR volume.

CFR INDEXES AND TABULAR GUIDES

A subject index to the Code of Federal Regulations is contained in a separate volume, revised annually as of January 1, entitled CFR INDEX AND FINDING AIDS. This volume contains the Parallel Table of Statutory Authorities and Agency Rules (Table I). A list of CFR titles, chapters, and parts and an alphabetical list of agencies publishing in the CFR are also included in this volume.

An index to the text of ''Title 3—The President'' is carried within that volume.

The Federal Register Index is issued monthly in cumulative form. This index is based on a consolidation of the ''Contents'' entries in the daily Federal Register.

A List of CFR Sections Affected (LSA) is published monthly, keyed to the revision dates of the 50 CFR titles.

REPUBLICATION OF MATERIAL

There are no restrictions on the republication of textual material appearing in the Code of Federal Regulations.

INQUIRIES

For a legal interpretation or explanation of any regulation in this volume, contact the issuing agency. The issuing agency's name appears at the top of odd-numbered pages.

For inquiries concerning CFR reference assistance, call 202-741-6000 or write to the Director, Office of the Federal Register, National Archives and Records Administration, Washington, DC 20408 or e-mail fedreg.info@nara.gov.

SALES

The Government Printing Office (GPO) processes all sales and distribution of the CFR. For payment by credit card, call toll-free, 866-512-1800, or DC area, 202-512-1800, M-F 8 a.m. to 4 p.m. e.s.t. or fax your order to 202-512-2250, 24 hours a day. For payment by check, write to the Superintendent of Documents, Attn: New Orders, P.O. Box 371954, Pittsburgh, PA 15250-7954. For GPO Customer Service call 202-512-1803.

ELECTRONIC SERVICES

The full text of the Code of Federal Regulations, the LSA (List of CFR Sections Affected), The United States Government Manual, the Federal Register, Public Laws, Public Papers, Weekly Compilation of Presidential Documents and the Privacy Act Compilation are available in electronic format at www.gpoaccess.gov/nara (''GPO Access''). For more information, contact Electronic Information Dissemination Services, U.S. Government Printing Office. Phone 202-512-1530, or 888-293-6498 (toll-free). E-mail, gpoaccess@gpo.gov.

The Office of the Federal Register also offers a free service on the National Archives and Records Administration's (NARA) World Wide Web site for public law numbers, Federal Register finding aids, and related information. Connect to NARA's web site at www.archives.gov/federal-register. The NARA site also contains links to GPO Access.

RAYMOND A. MOSLEY,
Director,
Office of the Federal Register.

April 1, 2006.

THIS TITLE

Title 26—INTERNAL REVENUE is composed of twenty volumes. The contents of these volumes represent all current regulations issued by the Internal Revenue Service, Department of the Treasury, as of April 1, 2006. The first thirteen volumes comprise part 1 (Subchapter A—Income Tax) and are arranged by sections as follows: §§ 1.0–1.60; §§ 1.61–1.169; §§ 1.170–1.300; §§ 1.301–1.400; §§ 1.401–1.440; §§ 1.441–1.500; §§ 1.501–1.640; §§ 1.641–1.850; §§ 1.851–1.907; §§ 1.908–1.1000; §§ 1.1001–1.1400; §§ 1.1401–1.1550; and § 1.1551 to end. The fourteenth volume containing parts 2–29, includes the remainder of subchapter A and all of Subchapter B—Estate and Gift Taxes. The last six volumes contain parts 30–39 (Subchapter C—Employment Taxes and Collection of Income Tax at Source); parts 40–49; parts 50–299 (Subchapter D—Miscellaneous Excise Taxes); parts 300–499 (Subchapter F—Procedure and Administration); parts 500–599 (Subchapter G—Regulations under Tax Conventions); and part 600 to end (Subchapter H—Internal Revenue Practice).

The OMB control numbers for Title 26 appear in § 602.101 of this chapter. For the convenience of the user, § 602.101 appears in the Finding Aids section of the volumes containing parts 1 to 599.

For this volume, Carol A. Conroy was Chief Editor. The Code of Federal Regulations publication program is under the direction of Frances D. McDonald, assisted by Alomha S. Morris.

Title 26—Internal Revenue

(This book contains part 1, §1.1401 to 1.1550)

Part

CHAPTER I—Internal Revenue Service, Department of the Treasury (Continued) 1

CHAPTER I—INTERNAL REVENUE SERVICE, DEPARTMENT OF THE TREASURY (CONTINUED)

EDITORIAL NOTE: IRS published a document at 45 FR 6088, January 25, 1980, deleting statutory sections from their regulations. In Chapter I cross references to the deleted material have been changed to the corresponding sections of the IRS Code of 1954 or to the appropriate regulations sections. When either such change produced a redundancy, the cross reference has been deleted. For further explanation, see 45 FR 20795, March 31, 1980.

SUBCHAPTER A—INCOME TAX (CONTINUED)

Part		*Page*
1	Income taxes	5

SUPPLEMENTARY PUBLICATIONS: *Internal Revenue Service Looseleaf Regulations System.*

Additional supplementary publications are issued covering *Alcohol and Tobacco Tax Regulations,* and *Regulations Under Tax Conventions.*

SUBCHAPTER A—INCOME TAX (CONTINUED)

PART 1—INCOME TAXES

TAX ON SELF-EMPLOYMENT INCOME

Sec.
1.1401–1 Tax on self-employment income.
1.1402(a)–1 Definition of net earnings from self-employment.
1.1402(a)–2 Computation of net earnings from self-employment.
1.1402(a)–3 Special rules for computing net earnings from self-employment.
1.1402(a)–4 Rentals from real estate.
1.1402(a)–5 Dividends and interest.
1.1402(a)–6 Gain or loss from disposition of property.
1.1402(a)–7 Net operating loss deduction.
1.1402(a)–8 Community income.
1.1402(a)–9 Puerto Rico.
1.1402(a)–10 Personal exemption deduction.
1.1402(a)–11 Ministers and members of religious orders.
1.1402(a)–12 Continental shelf and certain possessions of the United States.
1.1402(a)–12T Continental shelf and certain possessions of the United States (temporary).
1.1402(a)–13 Income from agricultural activity.
1.1402(a)–14 Options available to farmers in computing net earnings from self-employment for taxable years ending after 1954 and before December 31, 1956.
1.1402(a)–15 Options available to farmers in computing net earnings from self-employment for taxable years ending on or after December 31, 1956.
1.1402(a)–16 Exercise of option.
1.1402(a)–17 Retirement payments to retired partners.
1.1402(a)–18 Split-dollar life insurance arrangements.
1.1402(b)–1 Self-employment income.
1.1402(c)–1 Trade or business.
1.1402(c)–2 Public office.
1.1402(c)–3 Employees.
1.1402(c)–4 Individuals under Railroad Retirement System.
1.1402(c)–5 Ministers and members of religious orders.
1.1402(c)–6 Members of certain professions.
1.1402(c)–7 Members of religious groups opposed to insurance.
1.1402(d)–1 Employee and wages.
1.1402(e)–1A Application of regulations under section 1402(e).
1.1402(e)–2A Ministers, members of religious orders and Christian Science practitioners; application for exemption from self-employment tax.
1.1402(e)–3A Time limitation for filing application for exemption.
1.1402(e)–4A Period for which exemption is effective.
1.1402(e)–5A Applications for exemption from self-employment taxes filed after December 31, 1986, by ministers, certain members of religious orders, and Christian Science practitioners.
1.1402(e)(1)–1 Election by ministers, members of religious orders, and Christian Science practitioners for self-employment coverage.
1.1402(e)(2)–1 Time limitation for filing waiver certificate.
1.1402(e)(3)–1 Effective date of waiver certificate.
1.1402(e)(4)–1 Treatment of certain remuneration paid in 1955 and 1956 as wages.
1.1402(e)(5)–1 Optional provision for certain certificates filed before April 15, 1962.
1.1402(e)(5)–2 Optional provisions for certain certificates filed on or before April 17, 1967.
1.1402(e)(6)–1 Certificates filed by fiduciaries or survivors on or before April 15, 1962.
1.1402(f)–1 Computation of partner's net earnings from self-employment for taxable year which ends as result of his death.
1.1402(g)–1 Treatment of certain remuneration erroneously reported as net earnings from self-employment.
1.1402(h)–1 Members of certain religious groups opposed to insurance.
1.1403–1 Cross references.

WITHHOLDING OF TAX ON NONRESIDENT ALIENS AND FOREIGN CORPORATIONS AND TAX-FREE COVENANT BONDS

NONRESIDENT ALIENS AND FOREIGN CORPORATIONS

1.1441–0 Outline of regulation provisions for section 1441.
1.1441–1 Requirement for the deduction and withholding of tax on payments to foreign persons.
1.1441–2 Amounts subject to withholding.
1.1441–3 Determination of amounts to be withheld.
1.1441–4 Exemptions from withholding for certain effectively connected income and other amounts.
1.1441–5 Withholding on payments to partnerships, trusts, and estates.
1.1441–6 Claim of reduced withholding under an income tax treaty.
1.1441–7 General provisions relating to withholding agents.
1.1441–8 Exemption from withholding for payments to foreign governments, international organizations, foreign central banks of issue, and the Bank for International Settlements.

1.1441–9 Exemption from withholding on exempt income of a foreign tax-exempt organization, including foreign private foundations.
1.1441–10 Withholding agents with respect to fact-pay arrangements.
1.1442–1 Withholding of tax on foreign corporations.
1.1442–2 Exemption under a tax treaty.
1.1442–3 Tax exempt income of a foreign tax-exempt corporations.
1.1443–1 Foreign tax-exempt organizations.
1.1445–1 Withholding on dispositions of U.S. real property interests by foreign persons: In general.
1.1445–2 Situations in which withholding is not required under section 1445(a).
1.1445–3 Adjustments to amount required to be withheld pursuant to withholding certificate.
1.1445–4 Liability of agents.
1.1445–5 Special rules concerning distributions and other transactions by corporations, partnerships, trusts, and estates.
1.1445–6 Adjustments pursuant to withholding certificate of amount required to be withheld under section 1445(e).
1.1445–7 Treatment of foreign corporation that has made an election under section 897(i) to be treated as a domestic corporation.
1.1445–8 Special rules regarding publicly traded partnerships, publicly traded trusts and real estate investment trusts (REITs).
1.1445–10T Special rule for Foreign governments (temporary).
1.1445–11T Special rules requiring withholding under § 1.1445–5 (temporary).
1.1446–0 Table of contents.
1.1446–1 Withholding tax on foreign partners' share of effectively connected taxable income.
1.1446–2 Determining a partnership's effectively connected taxable income allocable to foreign partners under section 704.
1.1446–3 Time and manner of calculating and paying over the 1446 tax.
1.1446–4 Publicly traded partnerships.
1.1446–5 Tiered partnership structures.
1.1446–6T Special rules to reduce a partnership's 1446 tax with respect to a foreign partner's allocable share of effectively connected taxable income (Temporary).
1.1446–7 Effective dates.

TAX-FREE COVENANT BONDS

1.1451–1 Tax-free covenant bonds issued before January 1, 1934.
1.1451–2 Exemptions from withholding under section 1451.

APPLICATION OF WITHHOLDING PROVISIONS

1.1461–1 Payment and returns of tax withheld.
1.1461–2 Adjustments for overwithholding or underwithholding of tax.
1.1461–3 Withholding under section 1446.
1.1462–1 Withheld tax as credit to recipient of income.
1.1463–1 Tax paid by recipient of income.
1.1464–1 Refunds or credits.

RULES APPLICABLE TO RECOVERY OF EXCESSIVE PROFITS ON GOVERNMENT CONTRACTS

RECOVERY OF EXCESSIVE PROFITS ON GOVERNMENT CONTRACTS

1.1471–1 Recovery of excessive profits on government contracts.

MITIGATION OF EFFECT OF RENEGOTIATION OF GOVERNMENT CONTRACTS

1.1481–1 [Reserved]

TAX ON TRANSFERS TO AVOID INCOME TAX

1.1491–1 Imposition of tax.
1.1492–1 Nontaxable transfers.
1.1493–1 Definition of foreign trust.
1.1494–1 Returns; payment and collection of tax.
1.1494–2 Effective date.

CONSOLIDATED RETURNS

RETURNS AND PAYMENT OF TAX

Consolidated Return Regulations

1.1502–0 Effective dates.
1.1502–1 Definitions.

CONSOLIDATED TAX LIABILITY

1.1502–2 Computation of tax liability.
1.1502–3 Consolidated tax credits.
1.1502–4 Consolidated foreign tax credit.
1.1502–5 Estimated tax.
1.1502–6 Liability for tax.
1.1502–9 Consolidated overall foreign losses and separate limitation losses.

COMPUTATION OF CONSOLIDATED TAXABLE INCOME

1.1502–11 Consolidated taxable income.

COMPUTATION OF SEPARATE TAXABLE INCOME

1.1502–12 Separate taxable income.
1.1502–13 Intercompany transactions.
1.1502–15 SRLY limitation on built-in losses.
1.1502–16 Mine exploration expenditures.
1.1502–17 Methods of accounting.
1.1502–18 Inventory adjustment.
1.1502–19 Excess loss accounts.
1.1502–19T Excess Loss Accounts (temporary).
1.1502–20 Disposition or deconsolidation of subsidiary stock.
1.1502–20T Disposition or deconsolidation of subsidiary stock (temporary).

COMPUTATION OF CONSOLIDATED ITEMS

1.1502–21 Net operating losses.
1.1502–21T Net operating losses (temporary).
1.1502–22 Consolidated capital gain and loss.
1.1502–23 Consolidated net section 1231 gain or loss.
1.1502–24 Consolidated charitable contributions deduction.
1.1502–26 Consolidated dividends received deduction.
1.1502–27 Consolidated section 247 deduction.
1.1502–28 Consolidated section 108.

BASIS, STOCK OWNERSHIP, AND EARNINGS AND PROFITS RULES

1.1502–30 Stock basis after certain triangular reorganizations.
1.1502–31 Stock basis after a group structure change.
1.1502–32 Investment adjustments.
1.1502–33 Earnings and profits.
1.1502–34 Special aggregate stock ownership rules.
1.1502–35 Transfers of subsidiary stock and deconsolidations of subsidiaries.

SPECIAL TAXES AND TAXPAYERS

1.1502–42 Mutual savings banks, etc.
1.1502–43 Consolidated accumulated earnings tax.
1.1502–44 Percentage depletion for independent producers and royalty owners.
1.1502–47 Consolidated returns by life-nonlife groups.
1.1502–55 Computation of alternative minimum tax of consolidated groups.

ADMINISTRATIVE PROVISIONS AND OTHER RULES

1.1502–75 Filing of consolidated returns.
1.1502–75T Filing of consolidated returns (temporary).
1.1502–76 Taxable year of members of group.
1.1502–77 Agent for the group.
1.1502–77T Agent for the group (temporary).
1.1502–78 Tentative carryback adjustments.
1.1502–79 Separate return years.
1.1502–80 Applicability of other provisions of law.
1.1502–80T Applicability of other provisions of law (temporary).
1.1502–81T Alaska Native Corporations.
1.1502–90 Table of contents.
1.1502–91 Application of section 382 with respect to a consolidated group.
1.1502–92 Ownership change of a loss group or a loss subgroup.
1.1502–93 Consolidated section 382 limitation (or subgroup section 382 limitation).
1.1502–94 Coordination with section 382 and the regulations thereunder when a corporation becomes a member of a consolidated group.
1.1502–95 Rules on ceasing to be a member of a consolidated group (or loss subgroup).
1.1502–96 Miscellaneous rules.
1.1502–97 Special rules under section 382 for members under the jurisdiction of a court in a title 11 similar case. [Reserved]
1.1502–98 Coordination with section 383.
1.1502–99 Effective dates.
1.1502–100 Corporations exempt from tax.
1.1503–1 Computation and payment of tax.
1.1503–2 Dual consolidated loss.
1.1503–2T Dual consolidated loss (temporary).
1.1504–0 Outline of provisions.
1.1504–1 Definitions.
1.1504–2—1.1504–3 [Reserved]
1.1504–4 Treatment of warrants, options, convertible obligations, and other similar interests.

REGULATIONS APPLICABLE FOR TAX YEARS FOR WHICH A RETURN IS DUE ON OR BEFORE AUGUST 11, 1999

1.1502–9A Applications of overall foreign loss recapture rules to corporations filing consolidated returns due on or before August 11, 1999.

REGULATIONS APPLICABLE TO TAXABLE YEARS BEFORE JANUARY 1, 1997

1.1502–15A Limitations on the allowance of built-in deductions for consolidated return years beginning before January 1, 1997.
1.1502–21A Consolidated net operating loss deduction generally applicable for consolidated return years beginning before January 1, 1997.
1.1502–22A Consolidated net capital gain or loss generally applicable for consolidated return years beginning before January 1, 1997.
1.1502–23A Consolidated net section 1231 gain or loss generally applicable for consolidated return years beginning before January 1, 1997.
1.1502–41A Determination of consolidated net long-term capital gain and consolidated net short-term capital loss generally applicable for consolidated return years beginning before January 1, 1997.

REGULATIONS APPLICABLE TO TAXABLE YEARS BEGINNING BEFORE JUNE 28, 2002

1.1502–77A Common parent agent for subsidiaries applicable for consolidated return years beginning before June 28, 2002.

REGULATIONS APPLICABLE TO TAXABLE YEARS BEFORE JANUARY 1, 1997

1.1502–79A Separate return years generally applicable for consolidated return years beginning before January 1, 1997.

REGULATIONS APPLYING SECTION 382 WITH RESPECT TO TESTING DATES (AND CORPORATIONS JOINING OR LEAVING CONSOLIDATED GROUPS) BEFORE JUNE 25, 1999

1.1502–90A Table of contents.
1.1502–91A Application of section 382 with respect to a consolidated group generally applicable for testing dates before June 25, 1999.
1.1502–92A Ownership change of a loss group or a loss subgroup generally applicable for testing dates before June 25, 1999.
1.1502–93A Consolidated section 382 limitation (or subgroup section 382 limitation) generally applicable for testing dates before June 25, 1999.
1.1502–94A Coordination with section 382 and the regulations thereunder when a corporation becomes a member of a consolidated group generally applicable for corporations becoming members of a group before June 25, 1999.
1.1502–95A Rules on ceasing to be a member of a consolidated group generally applicable for corporations ceasing to be members before June 25, 1999.
1.1502–96A Miscellaneous rules generally applicable for testing dates before June 25, 1999.
1.1502–97A Special rules under section 382 for members under the jurisdiction of a court in a title 11 similar case. [Reserved]
1.1502–98A Coordination with section 383 generally applicable for testing dates (or members joining or leaving a group) before June 25, 1999.
1.1502–99A Effective dates.

DUAL CONSOLIDATED LOSSES INCURRED IN TAXABLE YEARS BEGINNING BEFORE OCTOBER 1, 1992

1.1503–2A Dual consolidated loss.

AUTHORITY: 26 U.S.C. 7805, unless otherwise noted.

Section 1.1402 (e)–5T also is issued under 26 U.S.C. 1402(e)(1) and (2).

Section 1.1441–2 also issued under 26 U.S.C. 1441(c)(4) and 26 U.S.C. 3401(a)(6).

Section 1.1441–3 also issued under 26 U.S.C. 1441(c)(4), 26 U.S.C. 3401(a)(6) and 26 U.S.C. 7701(l).

Section 1.1441–4 also issued under 26 U.S.C. 1441(c)(4) and 26 U.S.C. 3401(a)(6).

Section 1.1441–5 also issued under 26 U.S.C. 1441(c)(4), 26 U.S.C. 3401(a)(6) and 26 U.S.C. 7701(b)(11).

Section 1.1441–6 also issued under 26 U.S.C. 1441(c)(4) and 26 U.S.C. 3401(a)(6).

Section 1.1441–7 also issued under 26 U.S.C. 1441(c)(4), 26 U.S.C. 3401(a)(6) and 26 U.S.C. 7701(l).

Section 1.1443–1 also issued under 26 U.S.C. 1443(a).

Section 1.1445–5 also issued under 26 U.S.C. 1445(e)(6).

Section 1.1445–8 also issued under 26 U.S.C. 1445(e)(6).

Section 1.1461–1 also issued under 26 U.S.C. 1441(c)(4) and 26 U.S.C. 3401(a)(6).

Section 1.1461–2 also issued under 26 U.S.C. 1441(c)(4) and 26 U.S.C. 3401(a)(6).

Section 1.1462–1 also issued under 26 U.S.C. 1441(c)(4) and 26 U.S.C. 3401(a)(6).

Section 1.1502–0 also issued under 26 U.S.C. 1502.

Section 1.1502–1 also issued under 26 U.S.C. 1502.

Section 1.1502–2 also issued under 26 U.S.C. 1502.

Section 1.1502–3 also issued under 26 U.S.C. 1502.

Section 1.1502–4 also issued under 26 U.S.C. 1502.

Section 1.1502–9 also issued under 26 U.S.C. 1502.

Section 1.1502–11 also issued under 26 U.S.C. 1502.

Section 1.1502–12 also issued under 26 U.S.C. 1502.

Section 1.1502–13 also issued under 26 U.S.C. 1502.

Section 1.1502–15 also issued under 26 U.S.C. 1502.

Section 1.1502–17 also issued under 26 U.S.C. 446 and 1502.

Section 1.1502–18 also issued under 26 U.S.C. 1502.

Section 1.1502–19 also issued under 26 U.S.C. 301, 1502, and 1503.

Section 1.1502–19T also issued under 26 U.S.C. 1502.

Section 1.1502–20 also issued under 26 U.S.C. 337(d) and 1502.

Section 1.1502–20T also issued under 26 U.S.C. 337(d) and 1502.

Section 1.1502–21 also issued under 26 U.S.C. 1502 and 6402(i).

Section 1.1502–21(b)(1) and (b)(3)(v) also issued under 26 U.S.C. 1502.

Section 1.1502–21T also issued under 26 U.S.C. 1502.

Section 1.1502–21T(b)(1) and (b)(3)(v) also issued under 26 U.S.C. 1502.

Section 1.1502–22 also issued under 26 U.S.C. 1502.

Section 1.1502–23 also issued under 26 U.S.C. 1502.

Section 1.1502–26 also issued under 26 U.S.C. 1502.

Section 1.1502–28 also issued under 26 U.S.C. 1502.

Section 1.1502–30 also issued under 26 U.S.C. 1502.

Section 1.1502–31 also issued under 26 U.S.C. 1502.

Section 1.1502–32 also issued under 26 U.S.C. 301, 1502, and 1503.

Section 1.1502–32 also issued under 26 U.S.C. 1502.

Section 1.1502–32(a)(2), (b)(3)(iii)(C), (b)(3)(iii)(D), and (b)(4)(vi) also issued under 26 U.S.C. 1502.

Section 1.1502–32T also issued under 26 U.S.C. 1502.

Section 1.1502–33 also issued under 26 U.S.C. 1502.

Section 1.1502–34 also issued under 26 U.S.C. 1502.

Section 1.1502–35 also issued under 26 U.S.C. 1502.

Section 1.1502–35T also issued under 26 U.S.C. 1502.

Section 1.1502–55 also issued under 26 U.S.C. 1502.

Section 1.1502–75 also issued under 26 U.S.C. 1502.

Section 1.1502–76 also issued under 26 U.S.C. 1502.

Section 1.1502–77 also issued under 26 U.S.C. 1502 and 6402(j).

Section 1.1502–77T also issued under 26 U.S.C. 1502.

Section 1.1502–78 also issued under 26 U.S.C. 1502, 6402(j), and 6411(c).

Section 1.1502–79 also issued under 26 U.S.C. 1502.

Section 1.1502–80 also issued under 26 U.S.C. 1502.

Section 1.1502–81T also issued under 26 U.S.C. 1502.

Section 1.1502–91 also issued under 26 U.S.C. 382(m) and 26 U.S.C. 1502.

Section 1.1502–92 also issued under 26 U.S.C. 382(m) and 26 U.S.C. 1502.

Section 1.1502–93 also issued under 26 U.S.C. 382(m) and 26 U.S.C. 1502.

Section 1.1502–94 also issued under 26 U.S.C. 382(m) and 26 U.S.C. 1502.

Section 1.1502–95 also issued under 26 U.S.C. 382(m) and 26 U.S.C. 1502.

Section 1.1502–96 also issued under 26 U.S.C. 382(m) and 26 U.S.C. 1502.

Section 1.1502–98 also issued under 26 U.S.C. 382(m) and 26 U.S.C. 1502.

Section 1.1502–99 also issued under 26 U.S.C. 382(m) and 26 U.S.C. 1502.

Section 1.1503–2 also issued under 26 U.S.C. 1502.

Section 1.1503–2T also issued under 26 U.S.C. 1503(d).

Section 1.1504–4 also issued under 26 U.S.C. 1504(a)(5).

Section 1.1502–9A also issued under 26 U.S.C. 1502.

Section 1.1502–15A also issued under 26 U.S.C. 1502.

Section 1.1502–21A also issued under 26 U.S.C. 1502.

Section 1.1502–22A also issued under 26 U.S.C. 1502.

Section 1.1502–23A also issued under 26 U.S.C. 1502.

Section 1.1502–41A also issued under 26 U.S.C. 1502.

Section 1.1502–77A also issued under 26 U.S.C. 1502 and 6402(j).

Section 1.1502–79A also issued under 26 U.S.C. 1502.

Section 1.1502–91A also issued under 26 U.S.C. 382(m) and 26 U.S.C. 1502.

Section 1.1502–92A also issued under 26 U.S.C. 382(m) and 26 U.S.C. 1502.

Section 1.1502–93A also issued under 26 U.S.C. 382(m) and 26 U.S.C. 1502.

Section 1.1502–94A also issued under 26 U.S.C. 382(m) and 26 U.S.C. 1502.

Section 1.1502–95A also issued under 26 U.S.C. 382(m) and 26 U.S.C. 1502.

Section 1.1502–96A also issued under 26 U.S.C. 382(m) and 26 U.S.C. 1502.

Section 1.1502–98A also issued under 26 U.S.C. 382(m) and 26 U.S.C. 1502.

Section 1.1502–99A also issued under 26 U.S.C. 382(m) and 26 U.S.C. 1502.

SOURCE: Sections 1.1401–1 through 1.1403–1 contained in T.D. 6691, 28 FR 12796, Dec. 3, 1963, unless otherwise noted.

TAX ON SELF-EMPLOYMENT INCOME

§ 1.1401–1 Tax on self-employment income.

(a) There is imposed, in addition to other taxes, a tax upon the self-employment income of every individual at the rates prescribed in section 1401(a) (old-age, survivors, and disability insurance) and (b) (hospital insurance). (See subparagraphs (1) and (2) of paragraph (b) of this section.) This tax shall be levied, assessed, and collected as part of the income tax imposed by subtitle A of the Code and, except as otherwise expressly provided, will be included with the tax imposed by section 1 or 3 in computing any deficiency or overpayment and in computing the interest and additions to any deficiency, overpayment, or tax. Since the tax on self-employment income is part of the income tax, it is subject to the jurisdiction of the Tax Court of the United States to the same extent and in the same manner as the other taxes under subtitle A of the Code. Furthermore, with respect to taxable years beginning after December 31, 1966, this tax must be taken into account in computing any estimate of the taxes required to be declared under section 6015.

(b) The rates of tax on self-employment income are as follows:

(1) For old-age, survivors, and disability insurance:

Taxable year	Percent
Beginning before January 1, 1957	3
Beginning after December 31, 1956 and before January 1, 1959	3.375
Beginning after December 31, 1958 and before January 1, 1960	3.75
Beginning after December 31, 1959 and before January 1, 1962	4.5
Beginning after December 31, 1961 and before January 1, 1963	4.7
Beginning after December 31, 1962 and before January 1, 1966	5.4
Beginning after December 31, 1965 and before January 1, 1967	5.8
Beginning after December 31, 1966 and before January 1, 1968	5.9
Beginning after December 31, 1967 and before January 1, 1969	5.8
Beginning after December 31, 1968 and before January 1, 1971	6.3
Beginning after December 31, 1970 and before January 1, 1973	6.9
Beginning after December 31, 1972	7.0

(2) For hospital insurance:

Taxable year	Percent
Beginning after December 31, 1965 and before January 1, 1967	0.35
Beginning after December 31, 1966 and before January 1, 1968	.50
Beginning after December 31, 1967 and before January 1, 1973	.60
Beginning after December 31, 1972 and before January 1, 1974	1.0
Beginning after December 31, 1973 and before January 1, 1978	.90
Beginning after December 31, 1977 and before January 1, 1981	1.10
Beginning after December 31, 1980 and before January 1, 1986	1.35
Beginning after December 31, 1985	1.50

(c) In general, self-employment income consists of the net earnings derived by an individual (other than a nonresident alien) from a trade or business carried on by him as sole proprietor or by a partnership of which he is a member, including the net earnings of certain employees as set forth in § 1.1402(c)–3, and of crew leaders, as defined in section 3121(o) (see such section and the regulations thereunder in part 31 of this chapter (Employment Tax Regulations)). See, however, the exclusions, exceptions, and limitations set forth in §§ 1.1402(a)–1 through 1.1402(h)–1.

[T.D. 6993, 34 FR 828, Jan. 18, 1969, as amended by T.D. 7333, 39 FR 44445, Dec. 24, 1974]

§ 1.1402(a)–1 Definition of net earnings from self-employment.

(a) Subject to the special rules set forth in §§ 1.1402(a)–3 to 1.1402(a)–17, inclusive, and to the exclusions set forth in §§ 1.1402(c)–2 to 1.1402(c)–7, inclusive, the term ''net earnings from self-employment'' means:

(1) The gross income derived by an individual from any trade or business carried on by such individual, less the deductions allowed by chapter 1 of the Code which are attributable to such trade or business, plus

(2) His distributive share (whether or not distributed), as determined under section 704, of the income (or minus the loss), described in section 702(a)(9) and as computed under section 703, from any trade or business carried on by any partnership of which he is a member.

(b) Gross income derived by an individual from a trade or business includes payments received by him from a partnership of which he is a member for services rendered to the partnership or for the use of capital by the partnership, to the extent the payments are determined without regard to the income of the partnership. However, such payments received from a partnership not engaged in a trade or business within the meaning of section 1402(c) and § 1.1402(c)–1 do not constitute gross income derived by an individual from a trade or business. See section 707(c) and the regulations thereunder, relating to guaranteed payments to a member of a partnership for services or the use of capital. See also section 706(a) and the regulations thereunder, relating to the taxable year of the partner in which such guaranteed payments are to be included in computing taxable income.

(c) Gross income derived by an individual from a trade or business includes gross income received (in the case of an individual reporting income on the cash receipts and disbursements method) or accrued (in the case of an individual reporting income on the accrual method) in the taxable year from a trade or business even though such income may be attributable in whole or in part to services rendered or other acts performed in a prior taxable year as to which the individual was not subject to the tax on self-employment income.

[T.D. 6691, 28 FR 12796, Dec. 3, 1963, as amended by T.D. 7333, 39 FR 44445, Dec. 24, 1974]

§ 1.1402(a)–2 Computation of net earnings from self-employment.

(a) *General rule.* In general, the gross income and deductions of an individual attributable to a trade or business (including a trade or business conducted by an employee referred to in paragraphs (b), (c), (d), or (e) of § 1.1402(c)–3), for the purpose of ascertaining his net earnings from self-employment, are to be determined by reference to the provisions of law and regulations applicable with respect to the taxes imposed by sections 1 and 3. Thus, if an individual uses the accrual method of accounting in computing taxable income from a trade or business for the purpose of the tax imposed by section 1 or 3, he must use the same method in determining net earnings from self-employment. Likewise, if a taxpayer engaged in a trade or business of selling property on the installment plan elects, under the provisions of section 453, to use the installment method in computing income for purposes of the tax under section 1 or 3, he must use the same method in determining net earnings from self-employment. Income which is excludable from gross income under any provision of subtitle A of the Internal Revenue Code is not taken into account in determining net earnings from self-employment except as otherwise provided in § 1.1402(a)–9, relating to certain residents of Puerto Rico, in § 1.1402(a)–11, relating to ministers or members of religious orders, and in § 1.1402(a)–12, relating to the term ''possession of the United States'' as used for purposes of the tax on self-employment income. Thus, in the case of a citizen of the United States conducting, in a foreign country, a trade or business in which both personal services and capital are material income-producing factors, any part of the income therefrom which is excluded from gross income as earned income under the provisions of section 911 and the regulations thereunder is not taken into account in determining net earnings from self-employment.

(b) *Trade or business carried on.* The trade or business must be carried on by the individual, either personally or through agents or employees. Accordingly, income derived from a trade or business carried on by an estate or trust is not included in determining the net earnings from self-employment of the individual beneficiaries of such estate or trust.

(c) *Aggregate net earnings.* Where an individual is engaged in more than one trade or business within the meaning of section 1402(c) and § 1.1402(c)–1, his net earnings from self-employment consist of the aggregate of the net income and losses (computed subject to the special rules provided in §§ 1.1402(a)–1 to 1.1402(a)–17 inclusive) of all such trades or businesses carried on by him. Thus, a loss sustained in one trade or business carried on by an individual will operate to offset the income derived by him from another trade or business.

(d) *Partnerships.* The net earnings from self-employment of an individual include, in addition to the earnings from a trade or business carried on by him, his distributive share of the income or loss, described in section 702(a)(9), from any trade or business carried on by each partnership of which he is a member. An individual's distributive share of such income or loss of a partnership shall be determined as provided in section 704, subject to the special rules set forth in section 1402(a) and in §§ 1.1402(a)–1 to 1.1402(a)–17, inclusive, and to the exclusions provided in section 1402(c) and §§ 1.1402(c)–2 to 1.1402(c)–7, inclusive. For provisions relating to the computation of the taxable income of a partnership, see section 703.

(e) *Different taxable years.* If the taxable year of a partner differs from that of the partnership, the partner shall include, in computing net earnings from self-employment, his distributive share of the income or loss, described in section 702(a)(9), of the partnership for its taxable year ending with or within the taxable year of the partner. For the special rule in case of the termination of a partner's taxable year as result of death, see §§ 1.1402(f) and 1.1402(f)–1.

(f) *Meaning of partnerships.* For the purpose of determining net earnings from self-employment, a partnership is one which is recognized as such for income tax purposes. For income tax purposes, the term ''partnership'' includes not only a partnership as known at common law, but, also a syndicate,

group, pool, joint venture, or other unincorporated organization which carries on any trade or business, financial operation, or venture, and which is not, within the meaning of the Code, a trust, estate, or a corporation. An organization described in the preceding sentence shall be treated as a partnership for purposes of the tax on self-employment income even though such organization has elected, pursuant to section 1361 and the regulations thereunder, to be taxed as a domestic corporation.

(g) *Nature of partnership interest.* The net earnings from self-employment of a partner include his distributive share of the income or loss, described in section 702(a)(9), of the partnership of which he is a member, irrespective of the nature of his membership. Thus, in determining his net earnings from self-employment, a limited or inactive partner includes his distributive share of such partnership income or loss. In the case of a partner who is a member of a partnership with respect to which an election has been made pursuant to section 1361 and the regulations thereunder to be taxed as a domestic corporation, net earnings from self-employment include his distributive share of the income or loss, described in section 702(a)(9), from the trade or business carried on by the partnership computed without regard to the fact that the partnership has elected to be taxed as a domestic corporation.

(h) *Proprietorship taxed as domestic corporation.* A proprietor of an unincorporated business enterprise with respect to which an election has been made pursuant to section 1361 and the regulations thereunder to be taxed as a domestic corporation shall compute his net earnings from self-employment without regard to the fact that such election has been made.

[T.D. 6691, 28 FR 12796, Dec. 3, 1963, as amended by T.D. 7333, 39 FR 44445, Dec. 24, 1974]

§ 1.1402(a)–3 Special rules for computing net earnings from self-employment.

For the purpose of computing net earnings from self-employment, the gross income derived by an individual from a trade or business carried on by him, the allowable deductions attributable to such trade or business, and the individual's distributive share of the income or loss, described in section 702(a)(9), from any trade or business carrier on by a partnership of which he is a member shall be computed in accordance with the special rules set forth in §§ 1.1402(a)–4 to 1.1402(a)–17, inclusive.

[T.D. 7333, 39 FR 44445, Dec. 24, 1974]

§ 1.1402(a)–4 Rentals from real estate.

(a) *In general.* Rentals from real estate and from personal property leased with the real estate (including such rentals paid in crop shares) and the deductions attributable thereto, unless such rentals are received by an individual in the course of a trade or business as a real-estate dealer, are excluded. Whether or not an individual is engaged in the trade or business of a real-estate dealer is determined by the application of the principles followed in respect of the taxes imposed by sections 1 and 3. In general, an individual who is engaged in the business of selling real estate to customers with a view to the gains and profits that may be derived from such sales is a real-estate dealer. On the other hand, an individual who merely holds real estate for investment or speculation and receives rentals therefrom is not considered a real-estate dealer. Where a real-estate dealer holds real estate for investment or speculation in addition to real estate held for sale to customers in the ordinary course of his trade or business as a real-estate dealer, only the rentals from the real estate held for sale to customers in the ordinary course of his trade or business as a real-estate dealer, and the deductions attributable thereto, are included in determining net earnings from self-employment; the rentals from the real estate held for investment or speculation, and the deductions attributable thereto, are excluded. Rentals paid in crop shares include income derived by an owner or lessee of land under an agreement entered into with another person pursuant to which such other person undertakes to produce a crop or livestock on such land and pursuant to which (1) the crop or livestock, or the proceeds thereof, are to be divided between such owner or lessee and such other person,

and (2) the share of the owner or lessee depends on the amount of the crop or livestock produced. See, however, paragraph (b) of this section.

(b) *Special rule for ''includible farm rental income''*—(1) *In general.* Notwithstanding the rules set forth in paragraph (a) of this section, there shall be included in determining net earnings from self-employment for taxable years ending after 1955 any income derived by an owner or tenant of land, if the following requirements are met with respect to such income:

(i) The income is derived under an arrangement between the owner or tenant of land and another person which provides that such other person shall produce agricultural or horticultural commodities on such land, and that there shall be material participation by the owner or tenant in the production or the management of the production of such agricultural or horticultural commodities; and

(ii) There is material participation by the owner or tenant with respect to any such agricultural or horticultural commodity.

Income so derived shall be referred to in this section as ''includible farm rental income''.

(2) *Requirement that income be derived under an arrangement.* In order for rental income received by an owner or tenant of land to be treated as includible farm rental income, such income must be derived pursuant to a share-farming or other rental arrangement which contemplates material participation by the owner or tenant in the production or management of production of agricultural or horticultural commodities.

(3) *Nature of arrangement.* (i) The arrangement between the owner or tenant and the person referred to in subparagraph (1) of this paragraph may be either oral or written. The arrangement must impose upon such other person the obligation to produce one or more agricultural or horticultural commodities (including livestock, bees, poultry, and fur-bearing animals and wildlife) on the land of the owner or tenant. In addition, it must be within the contemplation of the parties that the owner or tenant will participate in the production or the management of the production of the agricultural or horticultural commodities required to be produced by the other person under such arrangement to an extent which is material with respect either to the production or to the management of production of such commodities or is material with respect to the production and management of production when the total required participation in connection with both is considered.

(ii) The term ''production'', wherever used in this paragraph, refers to the physical work performed and the expenses incurred in producing a commodity. It includes such activities as the actual work of planting, cultivating, and harvesting crops, and the furnishing of machinery, implements, seed, and livestock. An arrangement will be treated as contemplating that the owner or tenant will materially participate in the ''production'' of the commodities required to be produced by the other person under the arrangement if under the arrangement it is understood that the owner or tenant is to engage to a material degree in the physical work related to the production of such commodities. The mere undertaking to furnish machinery, implements, and livestock and to incur expenses is not, in and of itself, sufficient. Such factors may be significant, however, in cases where the degree of physical work intended of the owner or tenant is not material. For example, if under the arrangement it is understood that the owner or tenant is to engage periodically in physical work to a degree which is not material in and of itself and, in addition, to furnish a substantial portion of the machinery, implements, and livestock to be used in the production of the commodities or to furnish or advance funds or assume financial responsibility for a substantial part of the expense involved in the production of the commodities, the arrangement will be treated as contemplating material participation of the owner or tenant in the production of such commodities.

(iii) The term ''management of the production'', wherever used in this paragraph, refers to services performed in making managerial decisions relating to the production, such as when to plant, cultivate, dust, spray, or harvest the crop, and includes advising and

consulting, making inspections, and making decisions as to matters such as rotation of crops, the type of crops to be grown, the type of livestock to be raised, and the type of machinery and implements to be furnished. An arrangement will be treated as contemplating that the owner or tenant is to participate materially in the ''management of the production'' of the commodities required to be produced by the other person under the arrangement if the owner or tenant is to engage to a material degree in the management decisions related to the production of such commodities. The services which are considered of particular importance in making such management decisions are those services performed in making inspections of the production activities and in advising and consulting with such person as to the production of the commodities. Thus, if under the arrangement it is understood that the owner or tenant is to advise or consult periodically with the other person as to the production of the commodities required to be produced by such person under the arrangement and to inspect periodically the production activities on the land, a strong inference will be drawn that the arrangement contemplates participation by the owner or tenant in the management of the production of such commodities. The mere undertaking to select the crops or livestock to be produced or the type of machinery and implements to be furnished or to make decisions as to the rotation of crops generally is not, in and of itself, sufficient. Such factors may be significant, however, in making the overall determination of whether the arrangement contemplates that the owner or tenant is to participate materially in the management of the production of the commodities. Thus, if in addition to the understanding that the owner or tenant is to advise or consult periodically with the other person as to the production of the commodities and to inspect periodically the production activities on the land, it is also understood that the owner is to select the type of crops and livestock to be produced and the type of machinery and implements to be furnished and to make decisions as to the rotation of crops, the arrangement will be treated as contemplating material participation of the owner or tenant in the management of production of such commodities.

(4) *Actual participation*. In order for the rental income received by the owner or tenant of land to be treated as includible farm rental income, not only must it be derived pursuant to the arrangement described in subparagraph (1) of this paragraph, but also the owner or tenant must actually participate to a material degree in the production or in the management of the production of any of the commodities required to be produced under the arrangement, or he must actually participate in both the production and the management of the production to an extent that his participation in the one when combined with his participation in the other will be considered participation to a material degree. If the owner or tenant shows that he periodically advises or consults with the other person, who under the arrangement produces the agricultural or horticultural commodities, as to the production of any of these commodities and also shows that he periodically inspects the production activities on the land, he will have presented strong evidence of the existence of the degree of participation contemplated by section 1402(a)(1). If, in addition to the foregoing, the owner or tenant shows that he furnishes a substantial portion of the machinery, implements, and livestock used in the production of the commodities or that he furnishes or advances funds, or assumes financial responsibility, for a substantial part of the expense involved in the production of the commodities, he will have established the existence of the degree of participation contemplated by section 1402(a)(1) and this paragraph.

(5) *Employees or agents.* An agreement entered into by an employee or agent of an owner or tenant and another person is considered to be an arrangement entered into by the owner or tenant for purposes of satisfying the requirement set forth in paragraph (b)(2) that the income must be derived under an arrangement between the owner or tenant and another person. For purposes

of determining whether the arrangement satisfies the requirement set forth in paragraph (b)(3) that the parties contemplate that the owner or tenant will materially participate in the production or management of production of a commodity, services which will be performed by an employee or agent of the owner or tenant are not considered to be services which the arrangement contemplates will be performed by the owner or tenant. Services actually performed by such employee or agent are not considered services performed by the owner or tenant in determining the extent to which the owner or tenant has participated in the production or management of production of a commodity. For taxable years beginning before January 1, 1974, contemplated or actual services of an agent or an employee of the owner or tenant are deemed to be contemplated or actual services of the owner or tenant under paragraphs (b)(3) and (b)(4) of this section.

(6) *Examples.* Application of the rules prescribed in this paragraph may be illustrated by the following examples:

Example (1). After the death of her husband, Mrs. A rents her farm, together with its machinery and equipment, to B for one-half of the proceeds from the commodities produced on such farm by B. It is agreed that B will live in the tenant house on the farm and be responsible for the over-all operation of the farm, such as planting, cultivating, and harvesting the field crops, caring for the orchard and harvesting the fruit and caring for the livestock and poultry. It also is agreed that Mrs. A will continue to live in the farm residence and help B operate the farm. Under the agreement it is contemplated that Mrs. A will regularly operate and clean the cream separator and feed the poultry flock and collect the eggs. When possible she will assist B in such work as spraying the fruit trees, penning livestock, culling the poultry, and controlling weeds. She will also assist in preparing the meals when B engages seasonal workers. The agreement between Mrs. A and B clearly provides that she will materially participate in the over-all production operations to be conducted on her farm by B. In actual practice, Mrs. A performs such regular and intermittent services. The regularly performed services are material to the production of an agricultural commodity, and the intermittent services performed are material to the production operations to which they relate. The furnishing of a substantial portion of the farm machinery and equipment also adds support to a conclusion that Mrs. A has materially participated. Accordingly, the rental income Mrs. A receives from her farm should be included in net earnings from self-employment.

Example (2). D agrees to produce a crop on C's cotton farm under an arrangement providing that C and D will each receive one-half of the proceeds from such production. C agrees to furnish all the necessary equipment, and it is understood that he is to advise D when to plant the cotton and when it needs to be chopped, plowed, sprayed, and picked. It is also understood that during the growing season C is to inspect the crop every few days to determine whether D is properly taking care of the crop. Under the arrangement, D is required to furnish all labor needed to grow and harvest the crop. C, in fact, renders such advice, makes such inspections, and furnishes such equipment. C's contemplated participation in management decisions is considered material with respect to the management of the cotton production operation. C's actual participation pursuant to the arrangement is also considered to be material with respect to the management of the production of cotton. Accordingly, the income C receives from his cotton farm is to be included in computing his net earnings from self-employment.

Example (3). E owns a grain farm and turns its operation over to his son, F. By the oral rental arrangement between E and F, the latter agrees to produce crops of grain on the farm, and E agrees that he will be available for consultation and advice and will inspect and help to harvest the crops. E furnishes most of the equipment, including a tractor, a combine, plows, wagons, drills, and harrows; he continues to live on the farm and does some of the work such as repairing barns and farm machinery, going to town for supplies, cutting weeds, etc.; he regularly inspects the crops during the growing season; and he helps F to harvest the crops. Although the final decisions are made by F, he frequently consults with his father regarding the production of the crops. An evaluation of all of E's actual activities indicates that they are sufficiently substantial and regular to support a conclusion that he is materially participating in the crop production operations and the management thereof. If it can be shown that the degree of E's actual participation was contemplated by the arrangement, E's income from the grain farm will be included in computing net earnings from self-employment.

Example (4). G owns a fully-equipped farm which he rents to H under an arrangement which contemplates that G shall materially participate in the management of the production of crops raised on the farm pursuant to the arrangement. G lives in town about 5 miles from the farm. About twice a month he

visits the farm and looks over the buildings and equipment. G may occasionally, in an emergency, discuss with H some phase of a crop production activity. In effect, H has complete charge of the management of farming operations regardless of the understanding between him and G. Although G pays one-half of the cost of the seed and fertilizer and is charged for the cost of materials purchased by H to make all necessary repairs, G's activities do not constitute material participation in the crop production activities. Accordingly, G's income from the crops is not included in computing net earnings from self-employment.

Example (5). I owned a farm several miles from the town in which he lived. He rented the farm to J under an arrangement which contemplated I's material participation in the management of production of wheat. I furnished one-half of the seed and fertilizer and all the farm equipment and livestock. He employed K to perform all the services in advising, consulting, and inspecting contemplated by the arrangement. I is not materially participating in the management of production of wheat by J. The work done by I's employee, K, is not attributable to I in determining the extent of I's participation. I's rental income from the arrangement is, therefore, not to be included in computing his net earnings from self-employment. For taxable years beginning before January 1, 1974, however, I's rental income would be includible in those earnings.

Example (6). L, a calendar-year taxpayer, appointed M as his agent to rent his fully equipped farm for 1974. M entered into a rental arrangement with N under which M was to direct the planting of crops, inspect them weekly during the growing season, and consult with N on any problems that might arise in connection with irrigation, etc., while N furnished all the labor needed to grow and harvest the crops. M did in fact fulfill its responsibilities under the arrangement. Although the arrangement entered into by M and N is considered to have been made by L, M's services are not attributable to L, and L's furnishing of a fully equipped farm is insufficient by itself to constitute material participation in the production of the crops. Accordingly, L's rental income from the arrangement is not included in his net earnings from self-employment for that year. For taxable years beginning before January 1, 1974, however, L's rental income would be includible in those earnings.

(c) *Rentals from living quarters*—(1) *No services rendered for occupants.* Payments for the use or occupancy of entire private residences or living quarters in duplex or multiple-housing units are generally rentals from real estate. Except in the case of real-estate dealers, such payments are excluded in determining net earnings from self-employment even though such payments are in part attributable to personal property furnished under the lease.

(2) *Services rendered for occupants.* Payments for the use or occupancy of rooms or other space where services are also rendered to the occupant, such as for the use or occupancy of rooms or other quarters in hotels, boarding houses, or apartment houses furnishing hotel services, or in tourist camps or tourist homes, or payments for the use or occupancy of space in parking lots, warehouses, or storage garages, do not constitute rentals from real estate; consequently, such payments are included in determining net earnings from self-employment. Generally, services are considered rendered to the occupant if they are primarily for his convenience and are other than those usually or customarily rendered in connection with the rental of rooms or other space for occupancy only. The supplying of maid service, for example, constitutes such service; whereas the furnishing of heat and light, the cleaning of public entrances, exits, stairways and lobbies, the collection of trash, and so forth, are not considered as services rendered to the occupant.

(3) *Example.* The application of this paragraph may be illustrated by the following example:

Example. A, an individual, owns a building containing four apartments. During the taxable year, he receives $1,400 from apartments numbered 1 and 2, which are rented without services rendered to the occupants, and $3,600 from apartments numbered 3 and 4, which are rented with services rendered to the occupants. His fixed expenses for the four apartments aggregate $1,200 during the taxable year. In addition, he has $500 of expenses attributable to the services rendered to the occupants of apartments 3 and 4. In determining his net earnings from self-employment, A includes the $3,600 received from apartments 3 and 4, and the expenses of $1,100 ($500 plus one-half of $1,200) attributable thereto. The rentals and expenses attributable to apartments 1 and 2 are excluded. Therefore, A has $2,500 of net earnings from self-employment for the taxable year from the building.

(d) *Treatment of business income which includes rentals from real estate.* Except in the case of a real-estate dealer, where an individual or a partnership is

engaged in a trade or business the income of which is classifiable in part as rentals from real estate, only that portion of such income which is not classifiable as rentals from real estate, and the expenses attributable to such portion, are included in determining net earnings from self-employment.

[T.D. 6691, 28 FR 12796, Dec. 3, 1963, as amended by T.D. 7710, 45 FR 50739, July 31, 1980]

§ 1.1402(a)–5 Dividends and interest.

(a) All dividends on shares of stock are excluded unless they are received by an individual in the course of his trade or business as a dealer in stocks or securities.

(b) Interest on any bond, debenture, note, or certificate, or other evidence of indebtedness, issued with interest coupons or in registered form by any corporation (including one issued by a government or political subdivision thereof) is excluded unless such interest is received in the course of a trade or business as a dealer in stocks or securities. However, interest with respect to which a credit against tax is allowable as provided in section 35, that is, interest on certain obligations of the United States and its instrumentalities, is not included in net earnings from self-employment even though received in the course of a trade or business as a dealer in stocks or securities. Only interest on bonds, debentures, notes, or certificates, or other evidence of indebtedness, issued with interest coupons or in registered form by a corporation, is excluded in the case of all persons other than dealers in stocks or securities; other interest received in the course of any trade or business (such as interest received by a pawnbroker on his loans or interest received by a merchant on his accounts or notes receivable) is not excluded.

(c) Dividends and interest of the character excludable under paragraphs (a) and (b) of this section received by an individual on stocks or securities held for speculation or investment are excluded whether or not the individual is a dealer in stocks or securities.

(d) A dealer in stocks or securities is a merchant of stocks or securities with an established place of business, regularly engaged in the business of purchasing stocks or securities and reselling them to customers; that is, he is one who as a merchant buys stocks or securities and sells them to customers with a view to the gains and profits that may be derived therefrom. Persons who buy and sell or hold stocks or securities for investment or speculation, irrespective of whether such buying or selling constitutes the carrying on of a trade or business, are not dealers in stocks or securities.

§ 1.1402(a)–6 Gain or loss from disposition of property.

(a) There is excluded any gain or loss: (1) Which is considered as gain or loss from the sale or exchange of a capital asset; (2) from the cutting of timber or the disposal of timber, coal, or iron ore, even though held primarily for sale to customers, if section 631 is applicable to such gain or loss; and (3) from the sale, exchange, involuntary conversion, or other disposition of property if such property is neither (i) stock in trade or other property of a kind which would properly be includible in inventory if on hand at the close of the taxable year, nor (ii) property held primarily for sale to customers in the ordinary course of a trade or business. For the purpose of the special rule in subparagraph (3) of this paragraph, it is immaterial whether a gain or loss is treated as a capital gain or loss or as an ordinary gain or loss for purposes other than determining net earnings from self-employment. For instance, where the character of a loss is governed by the provisions of section 1231, such loss is excluded in determining net earnings from self-employment even though such loss is treated under section 1231 as an ordinary loss. For the purposes of this special rule, the term ''involuntary conversion'' means a compulsory or involuntary conversion of property into other property or money as a result of its destruction in whole or in part, theft or seizure, or an exercise of the power of requisition or condemnation or the threat or imminence thereof; and the term ''other dispostion'' includes the destruction or loss, in whole or in part, of property by fire, storm, shipwreck, or other casualty, or by theft, even though there is no conversion of such property into other property or money.

(b) The application of this section may be illustrated by the following example:

Example. During the taxable year 1954, A, who owns a grocery store, realized a net profit of $1,500 from the sale of groceries and a gain of $350 from the sale of a refrigerator case. During the same year, he sustained a loss of $2,000 as a result of damage by fire to the store building. In computing taxable income, all of these items are taken into account. In determining net earnings from self-employment, however, only the $1,500 of profit derived from the sale of groceries is included. The $350 gain and the $2,000 loss are excluded.

[T.D. 6691, 28 FR 12796, Dec. 3, 1963, as amended by T.D. 6841, 30 FR 9309, July 27, 1965]

§ 1.1402(a)–7 Net operating loss deduction.

The deduction provided by section 172, relating to net operating losses sustained in years other than the taxable year, is excluded.

§ 1.1402(a)–8 Community income.

(a) *In case of an individual.* If any of the income derived by an individual from a trade or business (other than a trade or business carried on by a partnership) is community income under community property laws applicable to such income, all of the gross income, and the deductions attributable to such income, shall be treated as the gross income and deductions of the husband unless the wife exercises substantially all of the management and control of such trade or business, in which case all of such gross income and deductions shall be treated as the gross income and deductions of the wife. For the purpose of this special rule, the term ''management and control'' means management and control in fact, not the management and control imputed to the husband under the community property laws. For example, a wife who operates a beauty parlor without any appreciable collaboration on the part of her husband will be considered as having substantially all of the management and control of such business despite the provision of any community property law vesting in the husband the right of management and control of community property; and the income and deductions attributable to the operation of such beauty parlor will be considered the income and deductions of the wife.

(b) *In case of a partnership.* Even though a portion of a partner's distributive share of the income or loss, described in section 702(a)(9), from a trade or business carried on by a partnership is community income or loss under the community property laws applicable to such share, all of such distributive share shall be included in computing the net earnings from self-employment of such partner; no part of such share shall be taken into account in computing the net earnings from self-employment of the spouse of such partner. In any case in which both spouses are members of the same partnership, the distributive share of the income or loss of each spouse is included in computing the net earnings from self-employment of that spouse.

§ 1.1402(a)–9 Puerto Rico.

(a) *Residents.* A resident of Puerto Rico, whether or not a bona fide resident thereof during the entire taxable year, and whether or not an alien, a citizen of the United States, or a citizen of Puerto Rico, shall compute his net earnings from self-employment in the same manner as would a citizen of the United States residing in the United States. See paragraph (d) of § 1.1402(b)–1 for regulations relating to nonresident aliens. For the purpose of the tax on self-employment income, the gross income of such a resident of Puerto Rico also includes income from Puerto Rican sources. Thus, under this special rule, income from Puerto Rican sources will be included in determining net earnings from self-employment of a resident of Puerto Rico engaged in the active conduct of a trade or business in Puerto Rico despite the fact that, under section 933, such income may not be taken into account for purposes of the tax under section 1 or 3.

(b) *Nonresidents.* A citizen of Puerto Rico who is also a citizen of the United States and who is not a resident of Puerto Rico will compute his net earnings from self-employment in the same manner and subject to the same provisions of law and regulations as other citizens of the United States.

§ 1.1402(a)–10 Personal exemption deduction.

The deduction provided by section 151, relating to personal exemptions, is excluded.

§ 1.1402(a)–11 Ministers and members of religious orders.

(a) *In general.* For each taxable year ending after 1954 in which a minister or member of a religious order is engaged in a trade or business, within the meaning of section 1402(c) and § 1.1402(c)–5, with respect to service performed in the exercise of his ministry or in the exercise of duties required by such order, net earnings from self-employment from such trade or business include the gross income derived during the taxable year from any such service, less the deductions attributable to such gross income. For each taxable year ending on or after December 31, 1957, such minister or member of a religious order shall compute his net earnings from self-employment derived from the performance of such service without regard to the exclusions from gross income provided by section 107 (relating to rental value of parsonages) and section 119 (relating to meals and lodging furnished for the convenience of the employer). Thus, a minister who is subject to self-employment tax with respect to his services as a minister will include in the computation of his net earnings from self-employment for a taxable year ending on or after December 31, 1957, the rental value of a home furnished to him as remuneration for services performed in the exercise of his ministry or the rental allowance paid to him as remuneration for such services irrespective of whether such rental value or rental allowance is excluded from gross income by section 107. Similarly, the value of any meals or lodging furnished to a minister or to a member of a religious order in connection with service performed in the exercise of his ministry or as a member of such order will be included in the computation of his net earnings from self-employment for a taxable year ending on or after December 31, 1957, notwithstanding the exclusion of such value from gross income by section 119.

(b) *In employ of American employer.* If a minister or member of a religious order engaged in a trade or business described in section 1402(c) and § 1.1402(c)–5 is a citizen of the United States and performs service, in his capacity as a minister or member of a religious order, as an employee of an American employer, as defined in section 3121(h) and the regulations thereunder in part 31 of this chapter (Employment Tax Regulations), his net earnings from self-employment derived from such service shall be computed as provided in paragraph (a) of this section but without regard to the exclusions from gross income provided in section 911, relating to earned income from sources without the United States, and section 931, relating to income from sources within certain possessions of the United States. Thus, even though all the income of the minister or member for service of the character to which this paragraph is applicable was derived from sources without the United States, or from sources within certain possessions of the United States, and therefore may be excluded from gross income, such income is included in computing net earnings from self-employment.

(c) *Minister in a foreign country whose congregation is composed predominantly of citizens of the United States*—(1) *Taxable years ending after 1956.* For any taxable year ending after 1956, a minister of a church, who is engaged in a trade or business within the meaning of section 1402(c) and § 1.1402(c)–5, is a citizen of the United States, is performing service in the exercise of his ministry in a foreign country, and has a congregation composed predominantly of United States citizens, shall compute his net earnings from self-employment derived from his services as a minister for such taxable year without regard to the exclusion from gross income provided in section 911, relating to earned income from sources without the United States. For taxable years ending on or after December 31, 1957, such minister shall also disregard sections 107 and 119 in the computation of his net earnings from self-employment. (See paragraph (a) of this section.) For purposes of section 1402(a)(8) and this paragraph a ''congregation composed predominantly of citizens of the United

States'' means a congregation the majority of which throughout the greater portion of its minister's taxable year were United States citizens.

(2) *Election for taxable years ending after 1954 and before 1957.* (i) A minister described in subparagraph (1) of this paragraph who, for a taxable year ending after 1954 and before 1957, had income from service described in such subparagraph which would have been included in computing net earnings from self-employment if such income had been derived in a taxable year ending after 1956 by an individual who had filed a waiver certificate under section 1402(e), may elect to have section 1402(a)(8) and subparagraph (1) of this paragraph apply to his income from such service for his taxable years ending after 1954 and before 1957. If such minister filed a waiver certificate prior to August 1, 1956, in accordance with § 1.1402(e)(1)–1, or he files such a waiver certificate on or before the due date of his return (including any extensions thereof) for his last taxable year ending before 1957, he must make such election on or before the due date of his return (including any extensions thereof) for such taxable year or before April 16, 1957, whichever is the later. If the waiver certificate is not so filed, the minister must make his election on or before the due date of the return (including any extensions thereof) for his first taxable year ending after 1956. Notwithstanding the expiration of the period prescribed by section 1402(e)(2) for filing such waiver, the minister may file a waiver certificate at the time he makes the election. In no event shall an election be valid unless the minister files prior to or at the time of the election a waiver certificate in accordance with § 1.1402(e)(1)–1.

(ii) The election shall be made by filing with the district director of internal revenue with whom the waiver certificate, Form 2031, is filed a written statement indicating that, by reason of the Social Security Amendments of 1956, the minister desires to have the Federal old-age, survivors, and disability insurance system established by title II of the Social Security Act extended to his services performed in a foreign country as a minister of a congregation composed predominantly of United States citizens beginning with the first taxable year ending after 1954 and prior to 1957 for which he had income from such services. The statement shall be dated and signed by the minister and shall clearly state that it is an election for retroactive self-employment tax coverage under the Self-Employment Contributions Act of 1954. In addition, the statement shall include the following information:

(*a*) The name and address of the minister.

(*b*) His social security account number, if he has one.

(*c*) That he is a duly ordained, commissioned, or licensed minister of a church.

(*d*) That he is a citizen of the United States.

(*e*) That he is performing services in the exercise of his ministry in a foreign country.

(*f*) That his congregation is composed predominantly of citizens of the United States.

(*g*)(*1*) That he has filed a waiver certificate and, if so, where and under what circumstances the certificate was filed and the taxable year for which it is effective; or (*2*) that he is filing a waiver certificate with his election for retroactive coverage and, if so, the taxable year for which it is effective.

(*h*) That he has or has not filed income tax returns for his taxable years ending after 1954 and before 1957. If he has filed such returns, he shall state the years for which they were filed and indicate the district director of internal revenue with whom they were filed.

(iii) Notwithstanding section 1402(e)(3), a waiver certificate filed pursuant to § 1.1402(e)(1)–1 by a minister making an election under this paragraph shall be effective (regardless of when such certificate is filed) for such minister's first taxable year ending after 1954 in which he had income from service described in subparagraph (1) of this paragraph or for the taxable year of the minister prescribed by section 1402(e)(3), if such taxable year is earlier, and for all succeeding taxable years.

(iv) No interest or penalty shall be assessed or collected for failure to file a return within the time prescribed by

law if such failure arises solely by reason of an election made by a minister pursuant to this paragraph or for any underpayment of self-employment income tax arising solely by reason of such election, for the period ending with the date such minister makes an election pursuant to this paragraph.

(d) *Treatment of certain remuneration paid in 1955 and 1956 as wages.* For treatment of remuneration paid to an individual for service described in section 3121(b)(8)(A) which was erroneously treated by the organization employing him as employment with-in the meaning of chapter 21 of the Internal Revenue Code, see § 1.1402(e)(4)–1.

[T.D. 6691, 28 FR 12796, Dec. 3, 1963, as amended by T.D. 9194, 70 FR 18946, Apr. 11, 2005]

§ 1.1402(a)–12 Continental shelf and certain possessions of the United States.

[Reserved]. For further guidance, see § 1.1402(a)–12T.

[T.D. 9194, 70 FR 18946, Apr. 11, 2005]

§ 1.1402(a)–12T Continental shelf and certain possessions of the United States (temporary).

(a) Certain *possessions.* For purposes of the tax on self-employment income, the exclusion from gross income provided by section 931 (relating to bona fide residents of certain possessions of the United States) shall not apply. Net earnings from self-employment are subject to the tax on self-employment income even if such amounts are excluded from gross income under section 931.

(b) *Continental shelf.* For the definition of the term *United States* and for other geographical definitions relating to the continental shelf, see section 638 and § 1.638–1.

(c) *Effective date.* This section shall apply for taxable years ending after October 22, 2004.

[T.D. 9194, 70 FR 18946, Apr. 11, 2005]

§ 1.1402(a)–13 Income from agricultural activity.

(a) *Agricultural trade or business.* (1) An agricultural trade or business is one in which, if the trade or business were carried on exclusively by employees, the major portion of the services would constitute agricultural labor as defined in section 3121(g) and the regulations thereunder in part 31 of this chapter (Employment Tax Regulations). In case the services are in part agricultural and in part nonagricultural, the time devoted to the performance of each type of service is the test to be used to determine whether the major portion of the services would constitute agricultural labor. If more than half of the time spent in performing all the services is spent in performing services which would constitute agricultural labor under section 3121(g), the trade or business is agricultural. If only half, or less, of the time spent in performing all the services is spent in performing services which would constitute agricultural labor under section 3121(g), the trade or business is not agricultural. In every case the time spent in performing the services will be computed by adding the time spent in the trade or business during the taxable year by every individual (including the individual carrying on such trade or business and the members of his family) in performing such services. The operation of this special rule is not affected by section 3121(c), relating to the included-excluded rule for determining employment.

(2) The rules prescribed in subparagraph (1) of this paragraph have no application where the nonagricultural services are performed in connection with an enterprise which constitutes a trade or business separate and distinct from the trade or business conducted as an agricultural enterprise. Thus, the operation of a roadside automobile service station on farm premises constitutes a trade or business separate and distinct from the agricultural enterprise, and the gross income derived from such service station, less the deductions attributable thereto, is to be taken into account in determining net earnings from self-employment.

(b) *Farm operator's income for taxable years ending before 1955.* Income derived in a taxable year ending before 1955 from any agricultural trade or business (see paragraph (a) of this section), and all deductions attributable to such income, are excluded in computing net earnings from self-employment.

(c) *Farm operator's income for taxable years ending after 1954.* Income derived in a taxable year ending after 1954 from an agricultural trade or business (see paragraph (a) of this section) is includible in computing net earnings from self-employment. Income derived from an agricultural trade or business includes income derived by an individual under an agreement entered into by such individual with another person pursuant to which such individual undertakes to produce agricultural or horticultural commodities (including livestock, bees, poultry, and fur-bearing animals and wildlife) on land owned or leased by such other person and pursuant to which the agricultural or horticultural commodities produced by such individual, or the proceeds therefrom, are to be divided between such individual and such other person, and the amount of such individual's share depends on the amount of the agricultural or horticultural commodities produced. However, except as provided in paragraph (d) of this section, relating to arrangements involving material participation, the income derived under such an agreement by the owner or lessee of the land is not includible in computing net earnings from self-employment. See § 1.1402(a)–4. For options relating to the computation of net earnings from self-employment, see §§ 1.1402(a)–14 and 1.1402(a)–15.

(d) *Includible farm rental income for taxable years ending after 1955.* For taxable years ending after 1955, income derived from an agricultural trade or business (see paragraph (a) of this section) includes also income derived by the owner or tenant of land under an arrangement between such owner or tenant and another person, if such arrangement provides that such other person shall produce agricultural or horticultural commodities (including livestock, bees, poultry, and fur-bearing animals and wildlife) on such land, and that there shall be material participation by the owner or tenant in the production or the management of the production of such agricultural or horticultural commodities, and if there is material participation by the owner or tenant with respect to any such agricultural or horticultural commodity. See paragraph (b) of § 1.1402(a)–4. For options relating to the computation of net earnings from self-employment, see §§ 1.1402(a)–14 and 1.1402(a)–15.

(e) *Income from service performed after 1956 as a crew leader.* Income derived by a crew leader (see section 3121(o) and the regulations thereunder in Part 31 of this chapter (Employment Tax Regulations)) from service performed after 1956 in furnishing individuals to perform agricultural labor for another person and from service performed after 1956 in agricultural labor as a member of the crew is considered to be income derived from a trade or business for purposes of § 1.1402(c)–1. Whether such trade or business is an agricultural trade or business shall be determined by applying the rules set forth in this section.

§ 1.1402(a)–14 Options available to farmers in computing net earnings from self-employment for taxable years ending after 1954 and before December 31, 1956.

(a) *Computation of net earnings.* In the case of any trade or business which is carried on by an individual who reports his income on the cash receipts and disbursements method, and in which, if it were carried on exclusively by employees, the major portion of the services would constitute agricultural labor as defined in section 3121(g) (see paragraph (a) of § 1.1402(a)–13), net earnings from self-employment may, for a taxable year ending after 1954, at the option of the taxpayer, be computed as follows:

(1) *Gross income $1,800 or less.* If the gross income, computed as provided in paragraph (b) of this section, from such trade or business is $1,800 or less, the taxpayer may, at his option, treat as net earnings from self-employment from such trade or business an amount equal to 50 percent of such gross income. If the taxpayer so elects, the amount equal to 50 percent of such gross income shall be used in computing his self-employment income in lieu of his actual net earnings from such trade or business, if any.

(2) *Gross income in excess of $1,800.* If the gross income, computed as provided in paragraph (b) of this section, from such trade or business is more than $1,800, and the actual net earnings from self-employment from such trade

or business are less than $900, the taxpayer may, at his option, treat $900 as net earnings from self-employment. If the taxpayer so elects, $900 shall be used in computing his self-employment income in lieu of his actual net earnings from such trade or business, if any. However, if the taxpayer's actual net earnings from such trade or business, as computed in accordance with §§ 1.1402(a)–1 through 1.1402(a)–3 are $900 or more, such actual net earnings shall be used in computing his self-employment income.

(b) *Computation of gross income.* For purposes of paragraph (a) of this section, gross income shall consist of the gross receipts from such trade or business reduced by the cost or other basis of property which was purchased and sold in carrying on such trade or business, adjusted (after such reduction) in accordance with the provisions of § 1.1402(a)–3, relating to income and deductions not included in computing net earnings from self-employment.

(c) *Two or more agricultural activities.* If an individual is engaged in more than one agricultural trade or business within the meaning of paragraph (a) of § 1.1402(a)–13 (for example, the business of ordinary farming and the business of cotton ginning), the gross income derived from each agricultural trade or business shall be aggregated for purposes of the optional method provided in paragraph (a) of this section for computing net earnings from self-employment.

(d) *Examples.* Application of the regulations prescribed in paragraphs (a) and (b) of this section may be illustrated by the following examples:

Example (1). F, a farmer, uses the cash receipts and disbursements method of accounting in making his income tax returns. F's books and records show that during the calendar year 1955 he received $1,200 from the sale of produce raised on the farm, $200 from the sale of livestock raised on the farm and not held for breeding or dairy purposes, and $600 from the sale of a tractor. The income from the sale of the tractor is of a type which is excluded from net earnings from self-employment by section 1402(a). F's actual net earnings from self-employment, computed in accordance with the provisions of §§ 1.1402(a)–1 through 1.1402(a)–3, are $450. F may report $450 as his net earnings from self-employment or he may elect to report $700 (one-half of $1,400).

Example (2). C, a cattleman, uses the cash receipts and disbursements method of accounting in making his income tax returns. C had actual net earnings from self-employment, computed in accordance with the provisions of §§ 1.1402(a)–1 through 1.1402(a)–3, of $725. His gross receipts were $1,000 from the sale of produce raised on the farm and $1,200 from the sale of feeder cattle, which C bought for $500. The income from the sale of the feeder cattle is of a type which is included in computing net earnings from self-employment. Therefore, C may report $725 as his net earnings from self-employment or he may elect to report $850, one-half of $1,700 ($2,200 minus $500).

Example (3). R, a rancher, has gross income of $3,000 from the operation of his ranch, computed as provided in paragraph (b) of this section. His actual net earnings from self-employment from farming activities are less than $900. R, nevertheless, may elect to report $900 as net earnings from self-employment from such trade or business. If R had actual net earnings from self-employment from his farming activities in the amount of $900 or more, he would be required to report such amount in computing his self-employment income.

(e) *Members of farm partnerships.* The optional method provided by paragraph (a) of this section for computing net earnings from self-employment is not available to a member of a partnership with respect to his distributive share of the income or loss from any trade or business carried on by any partnership of which he is a member.

§ 1.1402(a)–15 Options available to farmers in computing net earnings from self-employment for taxable years ending on or after December 31, 1956.

(a) *Computation of net earnings.* In the case of any trade or business which is carried on by an individual or by a partnership and in which, if such trade or business were carried on exclusively by employees, the major portion of the services would constitute agricultural labor as defined in section 3121(g) (see paragraph (a) of § 1.1402(a)–13), net earnings from self-employment may, for a taxable year ending on or after December 31, 1956, at the option of the taxpayer, be computed as follows:

(1) *In case of an individual*—(i) *Gross income of less than specified amount.* If the gross income, computed as provided in paragraph (b) of this section, from such trade or business is $2,400 or

less ($1,800 or less for a taxable year ending on or after December 31, 1956, and beginning before January 1, 1966), the taxpayer may, at his option, treat as net earnings from self-employment from such trade or business an amount equal to 66⅔ percent of such gross income. If the taxpayer so elects, the amount equal to 66⅔ percent of such gross income shall be used in computing his self-employment income in lieu of his actual net earnings from such trade or business, if any.

(ii) *Gross income in excess of specified amount.* If the gross income, computed as provided in paragraph (b) of this section, from such trade or business is more than $2,400 ($1,800 for a taxable year ending on or after December 31, 1956, and beginning before January 1, 1966), and the net earnings from self-employment from such trade or business (computed without regard to this section) are less than $1,600 ($1,200 for a taxable year ending on or after December 31, 1956, and beginning before January 1, 1966), the taxpayer may, at his option, treat $1,600 ($1,200 for a taxable year ending on or after December 31, 1956, and beginning before January 1, 1966) as net earnings from self-employment. If the taxpayer so elects, $1,600 ($1,200 for a taxable year ending on or after December 31, 1956, and beginning before January 1, 1966) shall be used in computing his self-employment income in lieu of his actual net earnings from such trade or business, if any. However, if the taxpayer's actual net earnings from such trade or business, as computed in accordance with the applicable provisions of §§ 1.1402(a)–1 to 1.1402(a)–13, inclusive, are $1,600 or more ($1,200 or more for a taxable year ending on or after December 31, 1956, and beginning before January 1, 1966) such actual net earnings shall be used in computing his self-employment income.

(2) *In case of a member of a partnership*—(i) *Distributive share of gross income of less than specified amount.* If a taxpayer's distributive share of the gross income of a partnership (as such gross income is computed under the provisions of paragraph (b) of this section) derived from such trade or business (after such gross income has been reduced by the sum of all payments to which section 707(c) applies) is $2,400 or less ($1,800 or less for a taxable year ending on or after December 31, 1956, and beginning before January 1, 1966), the taxpayer may, at his option, treat as his distributive share of income described in section 702(a)(9) derived from such trade or business an amount equal to 66⅔ percent of his distributive share of such gross income (after such gross income has been reduced by the sum of all payments to which section 707(c) applies). If the taxpayer so elects, the amount equal to 66⅔ percent of his distributive share of such gross income shall be used by him in the computation of his net earnings from self-employment in lieu of the actual amount of his distributive share of income described in section 702(a)(9) from such trade or business, if any.

(ii) *Distributive share of gross income in excess of specified amount.* If a taxpayer's distributive share of the gross income of the partnership (as such gross income is computed under the provisions of paragraph (b) of this section) derived from such trade or business (after such gross income has been reduced by the sum of all payments to which section 707(c) applies) is more than $2,400 ($1,800 for a taxable year ending on or after December 31, 1956, and beginning before January 1, 1966) and the actual amount of his distributive share (whether or not distributed) of income described in section 702(a)(9) derived from such trade or business (computed without regard to this section) is less than $1,600 ($1,200 for a taxable year ending on or after December 31, 1956, and beginning before January 1, 1966), the taxpayer may, at his option, treat $1,600 ($1,200 for a taxable year ending on or after December 31, 1956, and beginning before January 1, 1966) as his distributive share of income described in section 702(a)(9) derived from such trade or business. If the taxpayer so elects, $1,600 ($1,200 for a taxable year ending on or after December 31, 1956, and beginning before January 1, 1966) shall be used by him in the computation of his net earnings from self-employment in lieu of the actual amount of his distributive share of income described in section 702(a)(9) from such trade or business, if any. However, if the actual amount of the taxpayer's

distributive share of income described in section 702(a)(9) from such trade or business, as computed in accordance with the applicable provisions of §§ 1.1402(a)–1 to 1.1402(a)–13, inclusive, is $1,600 or more ($1,200 or more for a taxable year ending on or after December 31, 1956, and beginning before January 1, 1966), such actual amount of the taxpayer's distributive share shall be used in computing his net earnings from self-employment.

(iii) *Cross reference.* For a special rule in the case of certain deceased partners, see paragraph (c) of § 1.1402(f)–1.

(b) *Computation of gross income.* For purposes of this section gross income has the following meanings:

(1) In the case of any such trade or business in which the income is computed under a cash receipts and disbursements method, the gross receipts from such trade or business reduced by the cost or other basis of property which was purchased and sold in carrying on such trade or business (see paragraphs (a) and (c), other than paragraph (a)(5), of § 1.61–4), adjusted (after such reduction) in accordance with the applicable provisions of §§ 1.1402(a)–3 to 1.1402(a)–13, inclusive.

(2) In the case of any such trade or business in which the income is computed under an accrual method (see paragraphs (b) and (c), other than paragraph (b)(5), of § 1.61–4), the gross income from such trade or business, adjusted in accordance with the applicable provisions of §§ 1.1402(a)–3 to 1.1402(a)–13, inclusive.

(c) *Two or more agricultural activities.* If an individual (including a member of a partnership) derives gross income (as defined in paragraph (b) of this section) from more than one agricultural trade or business, such gross income (including his distributive share of the gross income of any partnership derived from any such trade or business) shall be deemed to have been derived from one trade or business. Thus, such an individual shall aggregate his gross income derived from each agricultural trade or business carried on by him (which includes, under paragraph (b) of § 1.1402(a)–1, any guaranteed payment, within the meaning of section 707(c), received by him from a farm partnership of which he is a member) and his distributive share of partnership gross income (after such gross income has been reduced by any guaranteed payment within the meaning of section 707(c)) derived from each farm partnership of which he is a member. Such gross income is the amount to be considered for purposes of the optional method provided in this section for computing net earnings from self-employment. If the aggregate gross income of an individual includes income derived from an agricultural trade or business carried on by him and a distributive share of partnership income derived from an agricultural trade or business carried on by a partnership of which he is a member, such aggregate gross income shall be treated as income derived from a single trade or business carried on by him, and such individual shall apply the optional method applicable to individuals set forth in paragraph (a)(1) of this section for purposes of computing his net earnings from self-employment.

(d) *Examples.* The application of this section may be illustrated by the following examples:

Example (1). F is engaged in the business of farming and computes his income under the cash receipts and disbursements method. He files his income tax returns on the basis of the calendar year. During the year 1966, F's gross income from the business of farming (computed in accordance with paragraph (b)(1) of this section) is $2,325. His actual net earnings from self-employment derived from such business are $1,250. As his net earnings from self-employment, F may report $1,250 or, by the optional computation method, he may report $1,550 (66⅔ percent of $2,325).

Example (2). G is engaged in the business of farming and computes his income under the accrual method. His income tax returns are filed on the calendar year basis. For the year 1966, G's gross income from the operation of his farm (computed in accordance with paragraph (b)(2) of this section) is $2,800. He has actual net earnings from self-employment derived from such farm in the amount of $1,250. As his net earnings from self-employment derived from his farm, G may report his actual net earnings of $1,250, or by the optional method he may report $1,600. If G's actual net earnings from self-employment from his farming activities for 1966 were in an amount of $1,600 or more, he would be required to report such amount in computing his self-employment income.

Example (3). M, who files his income tax returns on a calendar year basis, is one of the

three partners of the XYZ Company, a partnership, engaged in the business of farming. The taxable year of the partnership is the calendar year, and its income is computed under the cash receipts and disbursements method. For M's services in connection with the planting, cultivating, and harvesting of the crops during the year 1966 the partnership agrees to pay him $500, the full amount of which is determined without regard to the income of the partnership and constitutes a guaranteed payment within the meaning of section 707(c). This guaranteed payment to M is the only such payment made during such year. The gross income derived from the business for the year 1966 computed in accordance with paragraph (b)(1) of this section and after being reduced by the guaranteed payment of $500 made to M, is $3,000. One-third of the $3,000 ($1,000), is M's distributive share of such gross income. Under paragraph (c) of this section, the guaranteed payment ($500) received by M and his distributive share of the partnership gross income ($1,000) are deemed to have been derived from one trade or business, and such amounts must be aggregated for purposes of the optional method of computing net earnings from self-employment. Since M's combined gross income from his two agricultural businesses ($1,000 and $500) is not more than $2,400 and since such income is deemed to be derived from one trade or business, M's net earnings from self-employment derived from such farming business may, at his option, be deemed to be $1,000 (66⅔ percent of $1,500).

Example (4). A is one of the two partners of the AB partnership which is engaged in the business of farming. The taxable year of the partnership is the calendar year and its income is computed under the accrual method. A files his income tax returns on the calendar year basis. The partnership agreement provides for an equal sharing in the profits and losses of the partnership by the two partners. A is an experienced farmer and for his services as manager of the partnership's farm activities during the year 1966 he receives $6,000 which amount constitutes a guaranteed payment within the meaning of section 707(c). The gross income of the partnership derived from such business for the year 1966, computed in accordance with paragraph (b)(2) of this section and after being reduced by the guaranteed payment made to A, is $9,600. A's distributive share of such gross income is $4,800 and his distributive share of income described in section 702(a)(9) derived from the partnership's business is $1,900. Under paragraph (c) of this section, the guaranteed payment received by A and his distributive share of the partnership gross income are deemed to have been derived from one trade or business, and such amounts must be aggregated for purposes of the optional method of computing his net earnings from self-employment. Since the aggregate of A's guaranteed payment ($6,000) and his distributive share of partnership gross income ($4,800) is more than $2,400 and since the aggregate of A's guaranteed payment ($6,000) and his distributive share ($1,900) of partnership income described in section 702(a)(9) is not less than $1,600, the optional method of computing net earnings from self-employment is not available to A.

Example (5). F is a member of the EFG partnership which is engaged in the business of farming. F files his income tax returns on the calendar year basis. The taxable year of the partnership is the calendar year, and its income is computed under a cash receipts and disbursements method. Under the partnership agreement the partners are to share equally the profits or losses of the business. The gross income derived from the partnership business for the year 1966, computed in accordance with paragraph (b)(1) of this section is $7,500. F's share of such gross income is $2,500. Due to drought and an epidemic among the livestock, the partnership sustains a net loss of $7,800 for the year 1966 of which loss F's share is $2,600. Since F's distributive share of gross income derived from such business is in excess of $2,400 and since F does not receive income described in section 702(a)(9) of $1,600 or more from such business, he may, at his option, be deemed to have received $1,600 as his distributive share of income described in section 702(a)(9) from such business.

[T.D. 6691, 28 FR 12796, Dec. 3, 1963, as amended by T.D. 6993, 34 FR 828, Jan. 18, 1969]

§ 1.1402(a)–16 Exercise of option.

A taxpayer shall, for each taxable year with respect to which he is eligible to use the optional method described in § 1.1402(a)–14 or § 1.1402(a)–15, make a determination as to whether his net earnings from self-employment are to be computed in accordance with such method. If the taxpayer elects the optional method for a taxable year, he shall signify such election by computing net earnings from self-employment under the optional method as set forth in Schedule F (Form 1040) of the income tax return filed by the taxpayer for such taxable year. If the optional method is not elected at the time of the filing of the return for a taxable year with respect to which the taxpayer is eligible to elect such optional method, such method may be elected on an amended return (or on such other form as may be prescribed for such use) filed within the period prescribed by section 6501 and the regulations thereunder for the assessment of the tax for

such taxable year. If the optional method is elected on a return for a taxable year, the taxpayer may revoke such election by filing an amended return (or such other form as may be prescribed for such use) for the taxable year within the period prescribed by section 6501 and the regulations thereunder for the assessment of the tax for such taxable year. If the taxpayer is deceased or unable to make an election, the person designated in section 6012(b) and the regulations thereunder may, within the period prescribed in this section elect the optional method for any taxable year with respect to which the taxpayer is eligible to use the optional method and revoke an election previously made by or for the taxpayer.

§ 1.1402(a)–17 Retirement payments to retired partners.

(a) *In general.* There shall be excluded, in computing net earnings from self-employment for taxable years ending on or after December 31, 1967, certain payments made on a periodic basis by a partnership, pursuant to a written plan of the partnership, to a retired partner on account of his retirement. The exclusion applies only if the payments are made pursuant to a plan which meets the requirements prescribed in paragraph (b) of this section, and, in addition, the conditions set forth in paragraph (c) of this section are met.

(b) *Retirement plan of partnership.* (1) To meet the requirements of section 1402(a)(10), the written plan of the partnership must set forth the terms and conditions of the program or system established by the partnership for the purpose of making payments to retired partners on account of their retirement. To qualify as payments on account of retirement, the payments must constitute bona fide retirement income. Thus, payments of benefits not customarily included in a pension or retirement plan such as layoff benefits are not payments on account of retirement. Eligibility for retirement generally is established on the basis of age, physical condition, or a combination of age or physical condition and years of service. Generally, retirement benefits are measured by, and based on, such factors as years of service and compensation received. In determining whether the plan of the partnership provides for payments on account of retirement, factors, formulas, etc., reflected in public, and in broad based private, pension or retirement plans in prescribing eligibility requirements and in computing benefits may be taken into account.

(2) The plan of the partnership must provide for payments on account of retirement:

(i) To partners generally or to a class or classes of partners,

(ii) On a periodic basis, and

(iii) Which continue at least until the partner's death.

For purposes of subdivision (i) of this subparagraph, a class of partners may, in an appropriate case, contain only one member. Payments are made on a periodic basis if made at regularly recurring intervals (usually monthly) not exceeding one year.

(c) *Conditions relating to exclusion*—(1) *In general.* A payment made pursuant to a written plan of a partnership which meets the requirements of paragraph (b) of this section shall be excluded, in computing net earnings from self-employment, only if:

(i) The retired partner to whom the payment is made rendered no service with respect to any trade or business carried on by the partnership (or its successors) during the taxable year of the partnership (or its successors), which ends within or with the taxable year of the retired partner and in which the payment was received by him;

(ii) No obligation (whether certain in amount or contingent on a subsequent event) exists (as of the close of the partnership's taxable year referred to in subdivision (i) of this subparagraph) from the other partners to the retired partner except with respect to retirement payments under the plan or rights such as benefits payable on account of sickness, accident, hospitalization, medical expenses, or death; and

(iii) The retired partner's share (if any) of the capital of the partnership has been paid to him in full before the close of the partnership's taxable year

referred to in subdivision (i) of this subparagraph.

By application of the conditions set forth in this subparagraph, either all payments on account of retirement received by a retired partner during the taxable year of the partnership ending within or with his taxable year are excluded or none of the payments are excluded. Subdivision (ii) of this subparagraph has application only to obligations from other partners in their capacity as partners as distinguished from an obligation which arose and exists from a transaction unrelated to the partnership or to a trade or business carried on by the partnership. The effect of the conditions set forth in subdivisions (ii) and (iii) of this subparagraph is that the exclusion may apply with respect to payments received by a retired partner during the taxable year of the partnership ending within or with his taxable year only if at the close of the partnership's taxable year the retired partner had no financial interest in the partnership except for the right to retirement payments.

(2) *Examples.* The application of subparagraph (1) of this paragraph may be illustrated by the following examples. Each example assumes that the partnership plan pursuant to which the payments are made meets the requirements of paragraph (b) of this section.

Example (1). A, who files his income tax returns on a calendar year basis, is a partner in the ABC partnership. The taxable year of the partnership is the period July 1 to June 30, inclusive. A retired from the partnership on January 1, 1973, and receives monthly payments on account of his retirement. As of June 30, 1973, no obligation existed from the other partners to A (except with respect to retirement payments under the plan) and A's share of the capital of the partnership had been paid to him in full. The monthly retirement payments received by A from the partnership in his taxable year ending on December 31, 1973, are not excluded from net earnings from self-employment since A rendered service to the partnership during a portion of the partnership's taxable year (July 1, 1972, through June 30, 1973) which ends within A's taxable year ending on December 31, 1973.

Example (2). D, a partner in the DEF partnership, retired from the partnership as of the close of December 31, 1972. The taxable year of both D and the partnership is the calendar year. During the partnership's taxable year ending December 31, 1973, D rendered no service with respect to any trade or business carried on by the partnership. On or before December 31, 1973, all obligations (other than with respect to retirement payments under the plan) from the other partners to D have been liquidated, and D's share of the capital of the partnership has been paid to him. Retirement payments received by D pursuant to the partnership's plan in his taxable year ending December 31, 1973, are excluded in determining his net earnings from self-employment (if any) for that taxable year.

Example (3). Assume the same facts as in example (2) except that as of the close of December 31, 1973, D has a right to a fixed percentage of any amounts collected by the partnership after that date which are attributable to services rendered by him prior to his retirement for clients of the partnership. The monthly payments received by D in his taxable year ending December 31, 1973, are not excluded from net earnings from self-employment since as of the close of the partnership's taxable year which ends with D's taxable year, an obligation (other than an obligation with respect to retirement payments) exists from the other partners to D.

[T.D. 7333, 39 FR 44446, Dec. 24, 1974]

§ 1.1402(a)–18 Split-dollar life insurance arrangements.

See §§ 1.61–22 and 1.7872–15 for rules relating to the treatment of split-dollar life insurance arrangements.

[T.D. 9092, 68 FR 54352, Sept. 17, 2003]

§ 1.1402(b)–1 Self-employment income.

(a) *In general.* Except for the exclusions in paragraphs (b) and (c) of this section and the exception in paragraph (d) of this section, the term ''self-employment income'' means the net earnings from self-employment derived by an individual during a taxable year.

(b) *Maximum self-employment income*—(1) *General rule.* Subject to the special rules described in subparagraph (2) of this paragraph, the maximum self-employment income of an individual for a taxable year (whether a period of 12 months or less) is:

(i) For any taxable year beginning in a calendar year after 1974, an amount equal to the contribution and benefit base (as determined under section 230 of the Social Security Act) which is effective for such calendar year; and

(ii) For any taxable year:

Ending before 1955	$3,600
Ending after 1954 and before 1959	4,200

Ending after 1958 and before 1966	4,800
Ending after 1965 and before 1968	6,600
Ending after 1967 and beginning before 1972	7,800
Beginning after 1971 and before 1973	9,000
Beginning after 1972 and before 1974	10,800
Beginning after 1973 and before 1975	13,200

(2) *Special rules.* (i) If an individual is paid wages as defined in subparagraph (3) of this paragraph in a taxable year, the maximum self-employment income for such taxable year is computed as provided in subdivision (ii) or (iii) of this subparagraph.

(ii) If an individual is paid wages as defined in subparagraph (3) (i) or (ii) of this paragraph in a taxable year, the maximum self-employment income of such individual for such taxable year is the excess of the amounts indicated in subparagraph (1) of this paragraph over the amount of the wages, as defined in subparagraph (3) (i) and (ii) of this paragraph, paid to him during the taxable year. For example, if for his taxable year beginning in 1974, an individual has $15,000 of net earnings from self-employment and during such taxable year is paid $1,000 of wages as defined in section 3121(a) (see subparagraph (3)(i) of this paragraph), he has $12,200 ($13,200 −$1,000) of self-employment income for the taxable year.

(iii) For taxable years ending on or after December 31, 1968, wages, as defined in subparagraph (3)(iii) of this paragraph, are taken into account in determining the maximum self-employment income of an individual for purposes of the tax imposed under section 1401(b) (hospital insurance), but not for purposes of the tax imposed under section 1401(a) (old-age survivors, and disability insurance). If an individual is paid wages as defined in subparagraph (3)(iii) of this paragraph in a taxable year, his maximum self-employment income for such taxable year for purposes of the tax imposed under section 1401(a) is computed under subparagraph (1) of this paragraph or subdivision (ii) of this subparagraph (whichever is applicable), and his maximum self-employment income for such taxable year for purposes of the tax imposed under section 1401(b) is the excess of his section 1401(a) maximum self-employment income over the amount of wages, as defined in subparagraph (3)(iii) of this paragraph, paid to him during the taxable year. For purposes of this subdivision, wages as defined in subparagraph (3)(iii) of this paragraph are deemed paid to an individual in the period with respect to which the payment is made, that is, the period in which the compensation was earned or deemed earned within the meaning of section 3231(e). For an explanation of the term ''compensation'' and for provisions relating to when compensation is earned, see the regulations under section 3231(e) in part 31 of this chapter (Employment Tax Regulations). The application of the rules set forth in this subdivision may be illustrated by the following example:

Example. M, a calendar-year taxpayer, has $15,000 of net earnings from self-employment for 1974 and during the taxable year is paid $1,000 of wages as defined in section 3121(a) (see subparagraph (3)(i) of this paragraph) and $1,600 of compensation subject to tax under section 3201 (see subparagraph (3)(iii) of this paragraph). Of the $1,600 of taxable compensation, $1,200 represents compensation for services rendered in 1974 and the balance ($400) represents compensation which pursuant to the provisions of section 3231(e) is earned or deemed earned in 1973. M's maximum self-employment income for 1974 for purposes of the tax imposed under section 1401(a), computed as provided in subdivision (ii) of this subparagraph, is $12,200 ($13,200−$1,000), and for purposes of the tax imposed under section 1401(b) is $11,000 ($12,200−$1,200). However, M may recompute his maximum self-employment income for 1973 for purposes of the tax imposed under section 1401(b) by taking into account the $400 of compensation which is deemed paid in 1973.

(3) *Meaning of term ''wages''.* For the purpose of the computation described in subparagraph (2) of this paragraph, the term ''wages'' includes:

(i) Wages as defined in section 3121(a);

(ii) Such remuneration paid to an employee for services covered by:

(*a*) An agreement entered into pursuant to section 218 of the Social Security Act (42 U.S.C. 418), which section provides for extension of the Federal old-age, survivors and disability insurance system to State and local government employees under voluntary agreements between the States and the Secretary of Health, Education, and

Welfare (Federal Security Administrator before April 11, 1953), or

(*b*) An agreement entered into pursuant to the provisions of section 3121(1), relating to coverage of citizens of the United States who are employees of foreign subsidiaries of domestic corporations,

as would be wages under section 3121(a) if such services constituted employment under section 3121(b). For an explanation of the term ''wages'', see the regulations under section 3121(a) in part 31 of this chapter (Employment Tax Regulations); and

(iii) Compensation, as defined in section 3231(e), which is subject to the employee tax imposed by section 3201 or the employee representative tax imposed by section 3211.

(c) *Minimum net earnings from self-employment.* Self-employment income does not include the net earnings from self-employment of an individual when the amount of such earnings for the taxable year is less than $400. Thus, an individual having only $300 of net earnings from self-employment for the taxable year would not have any self-employment income. However, an individual having net earnings from self-employment of $400 or more for the taxable year may, by application of paragraph (b)(2) of this section, have less than $400 of self-employment income for purposes of the tax imposed under section 1401(a) and the tax imposed under section 1401(b) or may have self-employment income of $400 or more for purposes of the tax imposed under section 1401(a) and of less than $400 for purposes of the tax imposed under section 1401(b). This could occur in a case in which the amount of the individual's net earnings from self-employment is $400 or more for a taxable year and the amount of such net earnings from self-employment plus the amount of wages, as defined in paragraph (b)(3) of this section, paid to him during the taxable year exceed the maximum self-employment income, as set forth in paragraph (b)(1) of this section, for the taxable year. However, the result occurs only if such maximum self-employment income exceeds the amount of such wages. The application of this paragraph may be illustrated by the following example:

Example. For 1974 M, a calendar-year taxpayer, has net earnings from self-employment of $2,000 and wages (as defined in paragraph (b)(3) (i) and (ii) of this section) of $12,500. Since M's net earnings from self-employment plus his wages exceed the maximum self-employment income for 1974 ($13,200), his self-employment income for 1974 is $700 ($13,200 − $12,500). If M also had wages, as defined in paragraph (b)(3)(iii) of this section, of $200, his self-employment income would be $700 for purposes of the tax imposed under section 1401(a) and $500 ($13,200 − $12,700 ($12,500+$200)) for purposes of the tax imposed under section 1401(b).

For provisions relating to when wages as defined in paragraph (b)(3)(iii) of this section are treated as paid, see paragraph (b)(2)(iii) of this section.

(d) *Nonresident aliens.* A nonresident alien individual never has self-employment income. While a nonresident alien individual who derives income from a trade or business carried on within the United States, Puerto Rico, the Virgin Islands, Guam, or American Samoa (whether by agents or employees, or by a partnership of which he is a member) may be subject to the applicable income tax provisions on such income, such nonresident alien individual will not be subject to the tax on self-employment income, since any net earnings which he may have from self-employment do not constitute self-employment income. For the purpose of the tax on self-employment income, an individual who is not a citizen of the United States but who is a resident of the Commonwealth of Puerto Rico, the Virgin Islands, or, for taxable years beginning after 1960, of Guam or American Samoa is not considered to be a nonresident alien individual.

[T.D. 6691, 28 FR 12796, Dec. 3, 1963, as amended by T.D. 7333, 39 FR 44447, Dec. 24, 1974]

§ 1.1402(c)–1 Trade or business.

In order for an individual to have net earnings from self-employment, he must carry on a trade or business, either as an individual or as a member of a partnership. Except for the exclusions discussed in §§ 1.1402(c)–2 to 1.1402(c)–7, inclusive, the term ''trade or business'', for the purpose of the tax on self-employment income, shall have the same meaning as when used in section 162. An individual engaged in one of the excluded activities specified in

such sections of the regulations may also be engaged in carrying on activities which constitute a trade or business for purposes of the tax on self-employment income. Whether or not he is also engaged in carrying on a trade or business will be dependent upon all of the facts and circumstances in the particular case. An individual who is a crew leader, as defined in section 3121(o) (see such section and the regulations thereunder in part 31 of this chapter (Employment Tax Regulations)), is considered to be engaged in carrying on a trade or business with respect to services performed by him after 1956 in furnishing individuals to perform agricultural labor for another person or services performed by him after 1956 as a member of the crew.

[T.D. 6978, 33 FR 15937, Oct. 30, 1968]

§ 1.1402(c)–2 Public office.

(a) *In general*—(1) *General rule.* Except as otherwise provided in subparagraph (2) of this paragraph, the performance of the functions of a public office does not constitute a trade or business.

(2) *Fee basis public officials*—(i) *In general.* If an individual receives fees after 1967 for the performance of the functions of a public office of a State or a political subdivision thereof for which he is compensated solely on a fee basis, and if the service performed in such office is eligible for (but is not made the subject of) an agreement between the State and the Secretary of Health, Education, and Welfare pursuant to section 218 of the Social Security Act to extend social security coverage thereto, the service for which such fees are received constitutes a trade or business within the meaning of section 1402(c) and § 1.1402(c)–1. If an individual performs service for a State or a political subdivision thereof in any period in more than one position, each position is treated separately for purposes of the preceding sentence. See also paragraph (f) of § 1.1402(c)–3 relating to the performance of service by an individual as an employee of a State or a political subdivision thereof in a position compensated solely on a fee basis.

(ii) *Election with respect to fees received in 1968.* (A) Any individual who in 1968 receives fees for service performed by him with respect to the functions of a public office of a State or a political subdivision thereof in any period in which the functions are performed in a position compensated solely on a fee basis may elect, if the performance of the service for which such fees are received constitutes a trade or business pursuant to the provisions of subdivision (i) of this subparagraph, to have such performance of service treated as excluded from the term ''trade or business'' for the purpose of the tax on self-employment income, pursuant to the provisions of section 122(c)(2) of the Social Security Amendments of 1967 (as quoted in § 1.1402(c)). Such election shall not be limited to service to which the fees received in 1968 are attributable but must also be applicable to service (if any) in subsequent years which, except for the election, would constitute a trade or business pursuant to the provisions of subdivision (i) of this subparagraph. An election made pursuant to the provisions of this subparagraph is irrevocable.

(B) The election referred to in subdivision (ii)(A) of this subparagraph shall be made by filing a certificate of election of exemption (Form 4415) on or before the due date of the income tax return (see section 6072), including any extension thereof (see section 6081), for the taxable year of the individual making the election which begins in 1968. The certificate of election of exemption shall be filed with an internal revenue office in accordance with the instructions on the certificate.

(b) *Meaning of public office.* The term ''public office'' includes any elective or appointive office of the United States or any possession thereof, of the District of Columbia, of a State or its political subdivisions, or a wholly-owned instrumentality of any one or more of the foregoing. For example, the President, the Vice President, a governor, a mayor, the Secretary of State, a member of Congress, a State representative, a county commissioner, a judge, a justice of the peace, a county or city attorney, a marshal, a sheriff, a constable, a registrar of deeds, or a notary public performs the functions of a public office. (However, the service of a notary public could not be made the subject of a section 218 agreement under

the Social Security Act because notaries are not ''employees'' within the meaning of that section. Accordingly, such service does not constitute a trade or business.)

[T.D. 7333, 39 FR 44448, Dec. 24, 1974, as amended by T.D. 7372, 40 FR 30945, July 24, 1975]

§ 1.1402(c)–3 Employees.

(a) *General rule.* Generally, the performance of service by an individual as an employee, as defined in the Federal Insurance Contributions Act (Chapter 21 of the Internal Revenue Code) does not constitute a trade or business within the meaning of section 1402(c) and § 1.1402(c)–1. However, in six cases set forth in paragraphs (b) to (g), inclusive, of this section, the performance of service by an individual is considered to constitute a trade or business within the meaning of section 1402(c) and § 1.1402(c)–1. (As to when an individual is an employee, see section 3121 (d) and (o) and section 3506 and the regulations under those sections in part 31 of this chapter (Employment Tax Regulations).)

(b) *Newspaper vendors.* Service performed by an individual who has attained the age of 18 constitutes a trade or business for purposes of the tax on self-employment income within the meaning of section 1402(c) and § 1.1402(c)–1 if performed in, and at the time of, the sale of newspapers or magazines to ultimate consumers, under an arrangement under which the newspapers or magazines are to be sold by him at a fixed price, his compensation being based on the retention of the excess of such price over the amount at which the newspapers or magazines are charged to him, whether or not he is guaranteed a minimum amount of compensation for such service, or is entitled to be credited with the unsold newspapers or magazines turned back.

(c) *Sharecroppers.* Service performed by an individual under an arrangement with the owner or tenant of land pursuant to which:

(1) Such individual undertakes to produce agricultural or horticultural commodities (including livestock, bees, poultry, and fur-bearing animals and wildlife) on such land,

(2) The agricultural or horticultural commodities produced by such individual, or the proceeds therefrom, are to be divided between such individual and such owner or tenant, and

(3) The amount of such individual's share depends on the amount of the agricultural or horticultural commodities produced, constitutes a trade or business within the meaning of section 1402(c) and § 1.1402(c)–1.

(d) *Employees of foreign government, instrumentality wholly owned by foreign government, or international organization.* Service performed in the United States, as defined in section 3121(e)(2) (see such section and the regulations thereunder in part 31 of this chapter (Employment Tax Regulations)), by an individual who is a citizen of the United States constitutes a trade or business within the meaning of section 1402(c) and § 1.1402(c)–1 if such service is excepted from employment, for purposes of the Federal Insurance Contributions Act (chapter 21 of the Code), by:

(1) Section 3121(b)(11), relating to service in the employ of a foreign government (for regulations under section 3121(b)(11), see § 31.3121(b)(11)–1 of this chapter);

(2) Section 3121(b)(12), relating to service in the employ of an instrumentality wholly owned by a foreign government (for regulations under section 3121(b)(12), see § 31.3121(b)(12)–1 of this chapter); or

(3) Section 3121(b)(15), relating to service in the employ of an international organization (for regulations under section 3121(b)(15), see § 31.3121(b)(15)–1 of this chapter).

This paragraph is applicable to service performed in any taxable year ending on or after December 31, 1960, except that it does not apply to service performed before 1961 in Guam or American Samoa.

(e) *Ministers and members of religious orders*—(1) *Taxable years ending before 1968.* Service described in section 1402(c)(4) performed by an individual during taxable years ending before 1968 for which a certificate filed pursuant to section 1402(e) is in effect constitutes a trade or business within the meaning of section 1402(c) and § 1.1402(c)–1. See also § 1.1402(c)–5.

(2) *Taxable years ending after 1967.* Service described in section 1402(c)(4) performed by an individual during taxable years ending after 1967 constitutes a trade or business within the meaning of section 1402(c) and § 1.1402(c)–1 unless an exemption under section 1402(e) (see §§ 1.1402(e)–1A through 1.1402(e)–4A) is effective with respect to such individual for the taxable year during which the service is performed. See also § 1.1402(c)–5.

(f) *State and local government employees compensated on fee basis*—(1) *In general.* (i) Section 1402(c)(2)(E) and this paragraph are applicable only with respect to fees received by an individual after 1967 for service performed by him as an employee of a State or a political subdivision thereof in a position compensated solely on a fee basis. If an individual performs service for a State or a political subdivision thereof in more than one position, each position is treated separately for purposes of determining whether the service performed in such position is performed by an employee and whether compensation for service performed in the position is solely on a fee basis.

(ii) If an individual receives fees after 1967 for service performed by him as an employee of a State or a political subdivision thereof in a position compensated solely on a fee basis, the service for which such fees are received constitutes a trade or business within the meaning of section 1402(c) and § 1.1402(c)–1 except that if service performed in such position is covered under an agreement entered into by the State and the Secretary of Health, Education, and Welfare pursuant to section 218 of the Social Security Act at the time a fee is received, the service to which such fee relates does not constitute a trade or business. See also paragraph (a) of § 1.1402(c)–2, relating, in part, to the performance of the functions of a public office of a State or a political subdivision thereof by an individual.

(2) *Election with respect to fees received in 1968.* (i) Any individual who in 1968 receives fees for service as an employee of a State or a political subdivision thereof in a position compensated solely on a fee basis may elect, if the performance of the service for which such fees are received constitutes a trade or business pursuant to the provisions of subparagraph (1) of this paragraph, to have such performance of service treated as excluded from the term ''trade or business'' for the purpose of the tax on self-employment income, pursuant to the provisions of section 122(c)(2) of the Social Security Amendments of 1967 (as quoted in § 1.1402(c)). Such election shall not be limited to service to which the fees received in 1968 are attributable but must also be applicable to service (if any) in subsequent years which, except for the election, would constitute a trade or business pursuant to the provisions of subparagraph (1) of this paragraph. An election made pursuant to the provisions of this subparagraph is irrevocable.

(ii) The election referred to in subdivision (i) of this subparagraph shall be made by filing a certificate of election of exemption (Form 4415) on or before the due date of the income tax return (see section 6072), including any extension thereof (see section 6081), for the taxable year of the individual making the election which begins in 1968. The certificate of election of exemption shall be filed with an internal revenue office in accordance with the instructions on the certificate.

(g) *Individuals engaged in fishing.* For taxable years ending after December 31, 1954, service performed by an individual on a boat engaged in catching fish or other forms of aquatic animal life (hereinafter ''fish'') constitutes a trade or business within the meaning of section 1402(c) and § 1.1402(c)–1 if the service is excepted from the definition of employment by section 3121(b)(20) and § 31.3121(b)(20)–1(a). However, the preceding sentence does not apply to services performed after December 31, 1954, and before October 4, 1976, on a boat engaged in catching fish if the owner or operator of the boat treated the individual as an employee in the manner described in § 31.3121(b)(20)–1(b).

[T.D. 6691, 28 FR 12796, Dec. 3, 1963, as amended by T.D. 6978, 33 FR 15937, Oct. 30, 1968; T.D. 7333, 39 FR 44448, Dec. 24, 1974; T.D. 7691, 45 FR 24129, Apr. 9, 1980; T.D. 7716, 45 FR 57123, Aug. 27, 1980]

§ 1.1402(c)–4 Individuals under Railroad Retirement System.

The performance of service by an individual as an employee or employee representative as defined in section 3231(b) and (c), respectively (see §§ 31.3231(b)–1 and 31.3231(c)–1 of Part 31 of this chapter (Employment Tax Regulations)), that is, an individual covered under the railroad retirement system, does not constitute a trade or business.

§ 1.1402(c)–5 Ministers and members of religious orders.

(a) *In general*—(1) *Taxable years ending before 1968.* For taxable years ending before 1955, a duly ordained, commissioned, or licensed minister of a church or a member of a religious order is not engaged in carrying on a trade or business with respect to service performed by him in the exercise of his ministry or in the exercise of duties required by such order. However, for taxable years ending after 1954 and before 1968, any individual who is a duly ordained, commissioned, or licensed minister of a church or a member of a religious order (other than a member of a religious order who has taken a vow of poverty as a member of such order) may elect, as provided in § 1.1402(e)(1)–1, to have the Federal old-age, survivors, and disability insurance system established by title II of the Social Security Act extended to service performed by him in his capacity as such a minister or member. If such a minister or a member of a religious order makes an election pursuant to § 1.1402(e)(1)–1 he is, with respect to service performed by him in such capacity, engaged in carrying on a trade or business for each taxable year to which the election is effective. An election by a minister or member of a religious order has no application to service performed by such minister or member which is not in the exercise of his ministry or in the exercise of duties required by such order.

(2) *Taxable years ending after 1967.* For any taxable year ending after 1967, a duly ordained, commissioned, or licensed minister of a church or a member of a religious order (other than a member of a religious order who has taken a vow of poverty as a member of such order) is engaged in carrying on a trade or business with respect to service performed by him in the exercise of his ministry or in the exercise of duties required by such order unless an exemption under section 1402(e) (see §§ 1.1402(e)–1A through 1.1402(e)–4A) is effective with respect to such individual for the taxable year during which the service is performed. An exemption which is effective with respect to a minister or a member of a religious order has no application to service performed by such minister or member which is not in the exercise of his ministry or in the exercise of duties required by such order.

(b) *Service by a minister in the exercise of his ministry.* (1)(i) A certificate of election filed by a duly ordained, commissioned, or licensed minister of a church under the provisions of § 1.1402(e)(1)–1 has application only to service performed by him in the exercise of his ministry.

(ii) An exemption under section 1402(e) (see §§ 1.1402(e)–1A through 1.1402(e)–4A) which is effective with respect to a duly ordained, commissioned, or licensed minister of a church has application only to service performed by him in the exercise of his ministry.

(2) Except as provided in paragraph (c)(3) of this section, service performed by a minister in the exercise of his ministry includes the ministration of sacerdotal functions and the conduct of religious worship, and the control, conduct, and maintenance of religious organizations (including the religious boards, societies, and other integral agencies of such organizations), under the authority of a religious body constituting a church or church denomination. The following rules are applicable in determining whether services performed by a minister are performed in the exercise of his ministry:

(i) Whether service performed by a minister constitutes the conduct of religious worship or the ministration of sacerdotal functions depends on the tenets and practices of the particular religious body constituting his church or church denomination.

(ii) Service performed by a minister in the control, conduct, and maintenance of a religious organization relates to directing, managing, or promoting the activities of such organization. Any religious organization is deemed to be under the authority of a religious body constituting a church or church denomination if it is organized and dedicated to carrying out the tenets and principles of a faith in accordance with either the requirements or sanctions governing the creation of institutions of the faith. The term ''religious organization'' has the same meaning and application as is given to the term for income tax purposes.

(iii) If a minister is performing service in the conduct of religious worship or the ministration of sacerdotal functions, such service is in the exercise of his ministry whether or not it is performed for a religious organization. The application of this rule may be illustrated by the following example:

Example. M, a duly ordained minister, is engaged to perform service as chaplain at N University. M devotes his entire time to performing his duties as chaplain which include the conduct of religious worship, offering spiritual counsel to the university students, and teaching a class in religion. M is performing service in the exercise of his ministry.

(iv) If a minister is performing service for an organization which is operated as an integral agency of a religious organization under the authority of a religious body constituting a church or church denomination, all service performed by the minister in the conduct of religious worship, in the ministration of sacerdotal functions, or in the control, conduct, and maintenance of such organization (see subparagraph (2)(ii) of this paragraph) is in the exercise of his ministry. The application of this rule may be illustrated by the following example:

Example. M, a duly ordained minister, is engaged by the N Religious Board to serve as director of one of its departments. He performs no other service. The N Religious Board is an integral agency of O, a religious organization operating under the authority of a religious body constituting a church denomination. M is performing service in the exercise of his ministry.

(v) If a minister, pursuant to an assignment or designation by a religious body constituting his church, performs service for an organization which is neither a religious organization nor operated as an integral agency of a religious organization, all service performed by him, even though such service may not involve the conduct of religious worship or the ministration of sacerdotal functions, is in the exercise of his ministry. The application of this rule may be illustrated by the following example:

Example. M, a duly ordained minister, is assigned by X, the religious body constituting his church, to perform advisory service to Y Company in connection with the publication of a book dealing with the history of M's church denomination. Y is neither a religious organization nor operated as an integral agency of a religious organization. M performs no other service for X or Y. M is performing service in the exercise of his ministry.

(c) *Service by a minister not in the exercise of his ministry.* (1)(i) A certificate filed by a duly ordained, commissioned, or licensed minister of a church under the provisions of § 1.1402(e)(1)–1 has no application to service performed by him which is not in the exercise of his ministry.

(ii) An exemption under section 1402(e) (see §§ 1.1402(e)–1A through 1.1402(e)–4A) which is effective with respect to a duly ordained, commissioned, or licensed minister of a church has no application to service performed by him which is not in the exercise of his ministry.

(2) If a minister is performing service for an organization which is neither a religious organization nor operated as an integral agency of a religious organization and the service is not performed pursuant to an assignment or designation by his ecclesiastical superiors, then only the service performed by him in the conduct of religious worship or the ministration of sacerdotal functions is in the exercise of his ministry. See, however, subparagraph (3) of this paragraph. The application of the rule in this subparagraph may be illustrated by the following example:

Example. M, a duly ordained minister, is engaged by N University to teach history

and mathematics. He performs no other service for N although from time to time he performs marriages and conducts funerals for relatives and friends. N University is neither a religious organization nor operated as an integral agency of a religious organization. M is not performing the service for N pursuant to an assignment or designation by his ecclesiastical superiors. The service performed by M for N University is not in the exercise of his ministry. However, service performed by M in performing marriages and conducting funerals is in the exercise of his ministry.

(3) Service performed by a duly ordained, commissioned, or licensed minister of a church as an employee of the United States, or a State, Territory, or possession of the United States, or the District of Columbia, or a foreign government, or a political subdivision of any of the foregoing, is not considered to be in the exercise of his ministry for purposes of the tax on self-employment income, even though such service may involve the ministration of sacerdotal functions or the conduct of religious worship. Thus, for example, service performed by an individual as a chaplain in the Armed Forces of the United States is considered to be performed by a commissioned officer in his capacity as such, and not by a minister in the exercise of his ministry. Similarly, service performed by an employee of a State as a chaplain in a State prison is considered to be performed by a civil servant of the State and not by a minister in the exercise of his ministry.

(d) *Service in the exercise of duties required by a religious order*—(1) *Certificate of election*. A certificate of election filed by a member of a religious order (other than a member of a religious order who has taken a vow of poverty as a member of such order) under the provisions of § 1.1402(e)(1)–1 has application to all duties required of him by such order.

(2) *Exemption*. An exemption under section 1402(e) (see §§ 1.1402(e)–1A through 1.1402(e)–4A) which is effective with respect to a member of a religious order (other than a member of a religious order who has taken a vow of poverty as a member of such order) has application only to the duties required of him by such order.

(3) *Service*. For purposes of subparagraphs (1) and (2) of this paragraph, the nature or extent of the duties required of the member by the order is immaterial so long as it is a service which he is directed or required to perform by his ecclesiastical superiors.

[T.D. 6691, 28 FR 12796, Dec. 3, 1963, as amended by T.D. 6978, 33 FR 15937, Oct. 30, 1968]

§ 1.1402(c)–6 Members of certain professions.

(a) *Periods of exclusion*—(1) *Taxable years ending before 1955*. For taxable years ending before 1955, an individual is not engaged in carrying on a trade or business with respect to the performance of service in the exercise of his profession as a physician, lawyer, dentist, osteopath, veterinarian, chiropractor, naturopath, optometrist, Christian Science practitioner, architect, certified public accountant, accountant registered or licensed as an accountant under State or municipal law, full-time practicing public accountant, funeral director, or professional engineer.

(2) *Taxable years ending in 1955*. Except as provided in paragraph (b) of this section, for a taxable year ending in 1955 an individual is not engaged in carrying on a trade or business with respect to the performance of service in the exercise of his profession as a physician, lawyer, dentist, osteopath, veterinarian, chiropractor, naturopath, optometrist, or Christian Science practitioner.

(3) *Taxable years ending after 1955*—(i) *Doctors of medicine*. For taxable years ending after 1955 and before December 31, 1965, and individual is not engaged in carrying on a trade or business with respect to the performance of service in the exercise of his profession as a doctor of medicine. For taxable years ending after December 30, 1965, an individual is engaged in carrying on a trade or business with respect to the performance of service in the exercise of his profession as a doctor of medicine.

(ii) *Christian Science practitioners*. Except as provided in paragraph (b)(1) of this section, for taxable years ending after 1955 and before 1968, an individual is not engaged in carrying on a trade or business with respect to the performance of service in the exercise of his

profession as a Christian Science practitioner. For provisions relating to the performance of service in taxable years ending after 1967 by an individual in the exercise of his profession as a Christian Science practitioner, see paragraph (b)(2) of this section.

(b) *Christian Science practitioner*—(1) *Certain taxable years ending before 1968; election.* For taxable years ending after 1954 and before 1968, a Christian Science practitioner may elect, as provided in § 1.1402(e)(1)–1, to have the Federal old-age, survivors, and disability insurance system established by title II of the Social Security Act extended to service performed by him in the exercise of his profession as a Christian Science practitioner. If an election is made pursuant to § 1.1402(e)(1)–1, the Christian Science practitioner is, with respect to the performance of service in the exercise of such profession, engaged in carrying on a trade or business for each taxable year for which the election is effective. An election by a Christian Science practitioner has no application to service performed by him which is not in the exercise of his profession as a Christian Science practitioner.

(2) *Taxable years ending after 1967; exemption.* For a taxable year ending after 1967, a Christian Science practitioner is, with respect to the performance of service in the exercise of his profession as a Christian Science practitioner, engaged in carrying on a trade or business unless an exemption under section 1402(e) (see §§ 1.1402(e)–1A through 1.1402(e)–4A) is effective with respect to him for the taxable year during which the service is performed. An exemption which is effective with respect to a Christian Science practitioner has no application to service performed by him which is not in the exercise of his profession as a Christian Science practitioner.

(c) *Meaning of terms.* The designations in this section are to be given their commonly accepted meanings. For taxable years ending after 1955, an individual who is a doctor of osteopathy, and who is not a doctor of medicine within the commonly accepted meaning of that term, is deemed, for purposes of this section, not to be engaged in carrying on a trade or business in the exercise of the profession of doctor of medicine.

(d) *Legal requirements.* The exclusions specified in paragraph (a) of this section apply only if the individuals meet the legal requirements, if any, for practicing their professions in the place where they perform the service.

(e) *Partnerships.* In the case of a partnership engaged in the practice of any of the designated excluded professions, the partnership shall not be considered as carrying on a trade or business for the purpose of the tax on self-employment income, and none of the distributive shares of the income or loss, described in section 702(a)(9), of such partnership shall be included in computing net earnings from self-employment of any member of the partnership. On the other hand, where a partnership is engaged in a trade or business not within any of the designated excluded professions, each partner must include his distributive share of the income or loss, described in section 702(a)(9), of such partnership in computing his net earnings from self-employment, irrespective of whether such partner is engaged in the practice of one or more of such professions and contributes his professional services to the partnership.

[T.D. 6691, 28 FR 12796, Dec. 3, 1963, as amended by T.D. 6978, 33 FR 15938, Oct. 30, 1968]

§ 1.1402(c)–7 Members of religious groups opposed to insurance.

The performance of service by an individual:

(a) Who is a member of a recognized religious sect or division thereof, and

(b) Who is an adherent of established tenets or teachings of such sect or division by reason of which he is conscientiously opposed to acceptance of the benefits of any private or public insurance which makes payments in the event of death, disability, old age, or retirement or makes payments toward the cost of, or provides services for, medical care (including the benefits of any insurance system established by the Social Security Act),

during any taxable year for which he is granted a tax exemption, pursuant to section 1402(h), does not constitute a trade or business within the meaning

of section 1402(c) and § 1.1402(c)–1. See also §§ 1.1402(h) and 1.1402(h)–1.

[T.D. 6993, 34 FR 830, Jan. 18, 1969]

§ 1.1402(d)–1 Employee and wages.

For the purpose of the tax on self-employment income, the term ''employee'' and the term ''wages'' shall have the same meaning as when used in the Federal Insurance Contributions Act. For an explanation of these terms, see Subpart B of Part 31 of this chapter (Employment Tax Regulations).

§ 1.1402(e)–1A Application of regulations under section 1402(e).

The regulations in §§ 1.1402(e)–2A through 1.1402(e)–4A relate to section 1402(e) as amended by section 115(b)(2) of the Social Security Amendments of 1967 (81 Stat. 839) and apply to taxable years ending after 1967. Section 1.1402(e)–5A reflects changes made by section 1704(a) of the Tax Reform Act of 1986 (100 Stat. 2085, 2779) and applies to applications for exemption under section 1402(e) filed after December 31, 1986. For regulations under section 1402(e) (as in effect prior to amendment by the Social Security Amendments of 1967) applicable to taxable years ending before 1968, see §§ 1.1402(e)(1)–1 through 1.1402(e)(6)–1.

[T.D. 8221, 53 FR 33461, Aug. 31, 1988]

§ 1.1402(e)–2A Ministers, members of religious orders and Christian Science practitioners; application for exemption from self-employment tax.

(a) *In general.* (1) Subject to the limitations set forth in subparagraphs (2) and (3) of this paragraph, any individual who is (i) a duly ordained, commissioned, or licensed minister of a church or a member of a religious order (other than a member of a religious order who has taken a vow of poverty as a member of such order) or (ii) a Christian Science practitioner may request an exemption from the tax on self-employment income (see section 1401 and § 1.1401–1) with respect to services performed by him in his capacity as a minister or member, or as a Christian Science practitioner, as the case may be. Such a request shall be made by filing an application for exemption on Form 4361 in the manner provided in paragraph (b) of this section and within the time specified in § 1.1402(e)–3A. For provisions relating to the taxable year or years for which an exemption from the tax on self-employment income with respect to service performed by a minister or member or a Christian Science practitioner in his capacity as such is effective, see § 1.1402(e)–4A. For additional provisions applicable to services performed by individuals referred to in this subparagraph, see paragraph (e) of § 1.1402(c)–3 and § 1.1402(c)–5 relating to ministers and members of religious orders, and paragraphs (a)(3)(ii) and (b) of § 1.1402(c)–6 relating to Christian Science practitioners.

(2) The application for exemption shall contain, or there shall be filed with such application, a statement to the effect that the individual making application for exemption is conscientiously opposed to, or because of religious principles is opposed to, the acceptance (with respect to services performed by him in his capacity as a minister, member, or Christian Science practitioner) of any public insurance which makes payments in the event of death, disability, old age, or retirement or makes payments toward the cost of, or provides services for, medical care (including the benefits of any insurance system established by the Social Security Act). Thus, ministers, members of religious orders, and Christian Science practitioners requesting exemption from social security coverage must meet either of two alternative tests: (1) A religious principles test which refers to the institutional principles and discipline of the particular religious denomination to which he belongs, or (2) a conscientious opposition test which refers to the opposition because of religious considerations of individual ministers, members of religious orders, and Christian Science practitioners (rather than opposition based upon the general conscience of any such individual or individuals). The term ''public insurance'', as used in section 1402(e) and this paragraph, refers to governmental, as distinguished from private, insurance and does not include insurance carried with a commercial insurance carrier. To be

eligible to file an application for exemption on Form 4361, a minister, member, or Christian Science practitioners need not be opposed to the acceptance of all public insurance making payments of this specified type; he must, however, be opposed on religious grounds to the acceptance of any such payment which, in whole or in part, is based on, or measured by earnings from, services performed by in his capacity as a minister or member (see § 1.1402(c)–5) or in his capacity as a Christian Science practitioner (see paragraph (b)(2) of § 1.1402(c)–6). For example, a minister performing service in the exercise of his ministry may be eligible to file an application for exemption on Form 4361 even though he is not opposed to the acceptance of benefits under the Social Security Act with respect to service performed by him which is not in the exercise of his ministry.

(3) An exemption from the tax imposed on self-employment income with respect to service performed by a minister, member, or Christian Science practitioner in his capacity as such may not be granted to a minister, member, or practitioner who (in accordance with the provisions of section 1402(e) as in effect prior to amendment by section 115(b)(2) of the Social Security Amendments of 1967 (81 Stat. 839)) filed a valid waiver certificate on Form 2031 electing to have the Federal old-age, survivors, and disability insurance system establish by title II of the Social Security Act extended to service performed by him in the exercise of his ministry or in the exercise of duties required by the order of which he is a member, or in the exercise of his profession as a Christian Science practitioner. For provisions relating to waiver certificates on Form 2031, see §§ 1.1402(e)(1)–1 through 1.1402(e)(6)–1.

(b) *Application for exemption.* An application for exemption on Form 4361 shall be filed in triplicate with the internal revenue officer or the internal revenue office, as the case may be, designated in the instructions relating to the application for exemption. The application for exemption must be filed within the time prescribed in § 1.1402(e)–3A. If the last original Federal income tax return of an individual to whom paragraph (a) of this section applies which was filed before the expiration of such time limitation for filing an application for exemption shows no liability for tax on self-employment income, such return will be treated as an application for exemption, provided that before February 28, 1975 such individual also files a properly executed Form 4361.

(c) *Approval of application for exemption.* The filing of an application for exemption on Form 4361 by a minister, a member of a religious order, or a Christian Science practitioner does not constitute an exemption from the tax on self-employment income with respect to services performed by him in his capacity as a minister, member, or practitioner. The exemption is granted only if the application is approved by an appropriate internal revenue officer. See § 1.1402(e)–4A relating to the period for which an exemption is effective.

[T.D. 7333, 39 FR 44448, Dec. 24, 1974; 39 FR 45216, Dec. 31, 1974]

§ 1.1402(e)–3A Time limitation for filing application for exemption.

(a) *General rule.* (1) Any individual referred to in paragraph (a) of § 1.1402(e)–2A who desires an exemption from the tax on self-employment income with respect to service performed by him in his capacity as a minister or member of a religious order or as a Christian Science practitioner must file the application for exemption (Form 4361) prescribed by § 1.1402(e)–2A on or before whichever of the following dates is later:

(i) The due date of the income tax return (see section 6072), including any extension thereof (see section 6081), for his second taxable year ending after 1967, or

(ii) The due date of the income tax return, including any extension thereof, for his second taxable year beginning after 1953 for which he has net earnings from self-employment of $400 or more, any part of which:

(*a*) In the case of a duly ordained, commissioned, or licensed minister of a church, consists of remuneration for service performed in the exercise of his ministry,

(*b*) In the case of a member of a religious order who has not taken a vow of

poverty as a member of such order, consists of remuneration for service performed in the exercise of duties required by such order, or

(*c*) In the case of a Christian Science practitioner, consists of remuneration for service performed in the exercise of his profession as a Christian Science practitioner.

See paragraph (c) of this section for provisions relating to the computation of net earnings from self-employment.

(2) If a minister, a member of a religious order, or a Christian Science practitioner derives gross income in a taxable year both from service performed in such capacity and from the conduct of another trade or business, and the deductions allowed by Chapter 1 of the Internal Revenue Code which are attributable to the gross income derived from service performed in such capacity equal or exceed the gross income derived from service performed in such capacity, no part of the net earnings from self-employment (computed as prescribed in paragraph (c) of this section) for the taxable year shall be considered as derived from service performed in such capacity.

(3) The application of the rules set forth in subparagraphs (1) and (2) of this paragraph may be illustrated by the following examples:

Example (1). M, who makes his income tax returns on a calendar year basis, was ordained as a minister in January 1960. During each of two or more taxable years ending before 1968 M has net earnings from self-employment in excess of $400 some part of which is from service performed in the exercise of his ministry. M has not filed an effective waiver certificate on Form 2031 (see paragraph (a)(3) of § 1.1402(e)–2A). If M desires an exemption from the tax on self-employment income with respect to service performed in the exercise of his ministry, he must file an application for exemption on or before the due date of his income tax return for 1969 (his second taxable year ending after 1967), or any extension thereof.

Example (2). M, who makes his income tax returns on a calendar year basis, was ordained as a minister in January 1966. M has net earnings of $350 for the taxable year 1966 and has net earnings in excess of $400 for each of his taxable years 1967 and 1968 (some part or all of which is derived from service performed in the exercise of his ministry). M has not filed an effective waiver certificate on Form 2031 (see paragraph (a)(3) of § 1.1402(e)–2A). If M desires an exemption from the tax on self-employment income with respect to service performed in the exercise of his ministry, he must file an application for exemption on or before the due date of his income tax return for 1969 (his second taxable year ending after 1967), or any extension thereof.

Example (3). Assume the same facts as in example (2) except that M has net earnings in excess of $400 for each of his taxable years 1967 and 1969 (but less than $400 in 1968). The application for exemption must be filed on or before the due date of his income tax return for 1969, or any extension thereof.

Example (4). M was ordained as a minister in May 1973. During each of the taxable years 1973 and 1975, M, who makes his income tax returns on a calendar year basis, derives net earnings in excess of $400 from his activities as a minister. M has net earnings of $350 for the taxable year 1974, $200 of which is derived from service performed by him in the exercise of his ministry. If M desires an exemption from the tax on self-employment income with respect to service performed in the exercise of his ministry, he must file an application for exemption on or before the due date of his income tax return for 1975, or any extension thereof.

Example (5). M, who was ordained a minister in January 1973, is employed as a toolmaker by the XYZ Corporation for the taxable years 1973 and 1974 and also engages in activities as a minister on weekends. M makes his income tax returns on the basis of a calendar year. During each of the taxable years 1973 and 1974 M receives wages of $14,000 from the XYZ Corporation and derives net earnings of $400 from his activities as a minister. If M desires an exemption from the tax on self-employment income with respect to service performed in the exercise of his ministry, he must file an application for exemption on or before the due date of his income tax return for 1974, or any extension thereof. It should be noted that although by reason of section 1402(b)(1) (G) and (H) no part of the $400 represents ''self-employment income'', nevertheless the entire $400 constitutes ''net earnings from self-employment'' for purposes of fulfilling the requirements of section 1402(e)(2).

Example (6). M, who files his income tax returns on a calendar year basis, was ordained as a minister in March 1973. During 1973 he receives $410 for service performed in the exercise of his ministry. In addition to his ministerial services, M is engaged during the year 1973 in a mercantile venture from which he derives net earnings from self-employment in the amount of $4,000. The expenses incurred by him in connection with his ministerial services during 1973 and which are allowable deductions under Chapter 1 of the Internal Revenue Code amount to $410. During 1974 and 1975, M has net earnings from self-

employment in amounts of $4,600 and $4,800, respectively, and some part of each of these amounts is from the exercise of his ministry. The deductions allowed in each of the years 1974 and 1975 by Chapter 1 which are attributable to the gross income derived by M from the exercise of his ministry in each of such years, respectively, do not equal or exceed such gross income in such year. If M desires an exemption from the tax on self-employment income with respect to service performed in the exercise of his ministry, he must file an application for exemption on or before the due date of his income tax return for 1975, or an extension thereof.

(b) *Effect of death.* The right of an individual to file an application for exemption shall cease upon his death. Thus, the surviving spouse, administrator, or executor of a decedent shall not be permitted to file an application for exemption for such decedent.

(c) *Computation of net earnings*—(1) *Taxable years ending before 1968.* For purposes of this section net earnings from self-employment for taxable years ending before 1968 shall be determined without regard to the fact that, without an election under section 1402(e) (as in effect prior to amendment by section 115(b)(2) of the Social Security Amendments of 1967, see § 1.1402(e)–1A), the performance of services by a duly ordained, commissioned, or licensed minister of a church in the exercise of his ministry, or by a member of a religious order in the exercise of duties required by such order, or the performance of service by an individual in the exercise of his profession as a Christian Science practitioner, does not constitute a trade or business for purposes of the tax on self-employment income.

(2) *Taxable years ending after 1967.* For purposes of this section and § 1.1402(e)–4A net earnings from self-employment for taxable years ending after 1967 shall be determined without regard to section 1402(c) (4) and (5). See § 1.1402(c)–3(e)(2) and § 1.1402(c)–5 relating to ministers and members of religious orders, and paragraphs (a)(3)(ii) and (b) of § 1.1402(c)–6 relating to Christian Science practitioners.

[T.D. 7333, 39 FR 44449, Dec. 24, 1974]

§ 1.1402(e)–4A Period for which exemption is effective.

(a) *In general.* If an application for exemption on Form 4361:

(1) Is filed by a minister, a member of a religious order, or a Christian Science practitioner eligible to file such an application (see particularly paragraph (a) (2) and (3) of § 1.1402(e)–2A), and

(2) Is approved (see paragraph (c) of § 1.1402(e)–2A),

the exemption from the tax on self-employment income shall be effective for the first taxable year ending after 1967 for which such minister, member, or practitioner has net earnings from self-employment of $400 or more any part of which was derived from the performance of service in his capacity as a minister, member, or practitioner, and for all succeeding taxable years. See, however, paragraphs (b)(1)(ii) and (d)(2) of § 1.1402(c)–5 relating to ministers and members of religious orders and paragraph (b)(2) of § 1.1402(c)–6 relating to Christian Science practitioners.

(b) *Exemption irrevocable.* An exemption granted to a minister, a member of a religious order, or a Christian Science practitioner pursuant to the provisions of section 1402(e) is irrevocable.

[T.D. 7333, 39 FR 44450, Dec. 24, 1974]

§ 1.1402(e)–5A Applications for exemption from self-employment taxes filed after December 31, 1986, by ministers, certain members of religious orders, and Christian Science practitioners.

(a) *In general.* (1) Except as provided in paragraph (a)(2) of this section, this section applies to any individual who is a duly ordained, commissioned, or licensed minister of a church, member of a religious order (other than a member of a religious order who has taken a vow of poverty as a member of such order), or a Christian Science practitioner who files an application after December 31, 1986, for exemption from the tax on self-employment income (see section 1401 and 1.1401–1) with respect to services performed by him or her in his or her capacity as a minister, member, or practitioner pursuant to §§ 1.1402(e)–2A through 1.1402(e)–4A. This section does not apply to applications for exemption under section 1402(e) that are filed before January 1, 1987.

(2) *Application of this section to Christian Science practitioners.* Paragraph (b)

of this section does not apply to Christian Science practitioners. Thus, Christian Science practitioners filing applications for exemption from self-employment taxes under section 1402(e) should follow the procedures set forth in §§1.1402(e)–2A through 1.1402(e)–4A, and are not required to include the statement described in paragraph (b)(1)(ii) of this section. However, see paragraph (c) of this section for verification procedures with respect to applications for exemption from self-employment taxes filed after December 31, 1986, by Christian Science practitioners.

(b) *Church or order must be informed*—(1) *In general.* Any individual, other than a Christian Science practitioner, who files an application for exemption from the tax on self-employment income under section 1402(e) after December 31, 1986:

(i) Shall file such application in accordance with the procedures set forth in §§1.1402(e)–2A through 1.1402(e)–4A, and

(ii) Shall include with such application a statement to the effect that the individual making application for exemption has informed the ordaining, commissioning, or licensing body of the church or order that he or she is opposed to the acceptance (for services performed as a minister or member of a religious order not under a vow of poverty) of any public insurance that makes payments in the event of death, disability, old age, or retirement, or that makes payments toward the cost of, or provides services for, medical care (including the benefits of any insurance system established by the Social Security Act).

(2) *Statement to be filed with form.* If the form provided by the Service for applying for exemption under 1402(e) does not contain the statement set forth in paragraph (b)(1)(ii) of this section, any individual required to include this statement with his or her application under this paragraph (b) shall file such statement with the individual's application at the time and place prescribed for filing such application under §§1.1402(e)–2A and 1.1402(e)–3A. The statement shall contain the information set forth in paragraph (b)(1)(ii) of this section and shall be signed by such individual under penalties of perjury.

(c) *Verification of application*—(1) *In general.* The Service will approve an application for an exemption filed by an individual to whom this section applies only after verifying that the individual applying for the exemption is aware of the grounds on which the individual may receive an exemption under section 1402(e) (See §1.1402(e)–2A) and that the individual seeks exemption on such grounds in accordance with the procedures set forth in paragraph (c)(2) of this section.

(2) *Verification procedure.* Upon receipt of an application for exemption from self-employment taxes under section 1402(e) and this section, the Service will mail to the applicant a statement that describes the grounds on which an individual may receive an exemption under section 1402(e). The individual filing the application shall certify that he or she has read the statement and that he or she seeks exemption from self-employment taxes on the grounds listed in the statement. The certification shall be made by signing a copy of the statement under penalties of perjury and mailing the signed copy to the Service Center from which the statement was issued not later than 90 days after the date on which the statement was mailed to the individual. If the signed copy of the statement is not mailed to the Service Center within 90 days of the date on which the statement was mailed to the individual, that individual's exemption will not be effective until the date that the signed copy of the statement is received at the Service Center.

[T.D. 8136, 52 FR 12162, Apr. 15, 1987, redesignated and amended at T.D. 8221, 53 FR 33461, Aug. 31, 1988]

§ 1.1402(e)(1)–1 Election by ministers, members of religious orders, and Christian Science practitioners for self-employment coverage.

(a) *In general.* Any individual who is (1) a duly ordained, commissioned, or licensed minister of a church or a member of a religious order (other than a member of a religious order who has taken a vow of poverty as a member of such order) or (2) a Christian Science

practitioner may elect to have the Federal old-age, survivors, and disability insurance system established by title II of the Social Security Act extended to service performed by him in the exercise of his ministry or in the exercise of duties required by such order, or in the exercise of his profession as a Christian Science practitioner, as the case may be. Such an election shall be made by filing a certificate on Form 2031 in the manner provided in paragraph (b) of this section and within the time specified in §1.1402(e)(2)–1. If a minister or member to whom this section has application, or a Christian Science practitioner, makes an election by filing Form 2031 such individual shall, for each taxable year for which the election is effective (see §1.1402(e)(3)–1), be considered as carrying on a trade or business with respect to the performance of service in his capacity as a minister or member, or as a Christian Science practitioner, as the case may be.

(b) *Waiver certificate.* The certificate on Form 2031 shall be filed in triplicate with the district director of internal revenue for the internal revenue district in which is located the legal residence or principal place of business of the individual who executes the certificate. If such individual has no legal residence or principal place of business in any internal revenue district, the certificate shall be filed with the Director of International Operations, Internal Revenue Service, Washington, DC 20225, or at such other address as is designated in the instructions relating to the certificate. The certificate must be filed within the time prescribed in §1.1402(e)(2)–1. If an individual to whom paragraph (a) of this section has application submits to a district director of internal revenue a dated and signed statement indicating that he desires to have the Federal old-age, survivors, and disability insurance system established by title II of the Social Security Act extended to his services, such statement will be treated as a waiver certificate, if filed within the time specified in §1.1402(e)(2)–1, provided that without unnecessary delay such statement is supplemented by a properly executed Form 2031. An application for a social security account number filed on Form SS–5 or the filing of an income tax return showing an amount representing self-employment income or self-employment tax shall not be construed to constitute an election referred to in §1.1402(e)(1)–1.

§1.1402(e)(2)–1 Time limitation for filing waiver certificate.

(a) *General rule.* (1) Any individual referred to in §1.1402(e)(1)–1 who desires to have the Federal old-age, survivors, and disability insurance system established by title II of the Social Security Act extended to his services must file the waiver certificate (Form 2031) prescribed by §1.1402(e)(1)–1 on or before whichever of the following dates is later:

(i) The due date of the income tax return (see section 6072), including any extension thereof (see section 6081), for his second taxable year ending after 1963; or

(ii) The due date of the income tax return, including any extension thereof, for his second taxable year ending after 1954 for which he has net earnings from self-employment (computed as prescribed in paragraph (c) of this section) of $400 or more, any part of which:

(*a*) In the case of a duly ordained, commissioned, or licensed minister of a church, consists of remuneration for service performed in the exercise of his ministry,

(*b*) In the case of a member of a religious order who has not taken a vow of poverty as a member of such order, consists of remuneration for service performed in the exercise of duties required by such order, or

(*c*) In the case of a Christian Science practitioner, consists of remuneration for service performed in the exercise of his profession as a Christian Science practitioner.

(2) If a minister, a member of a religious order, or a Christian Science practitioner derives gross income in a taxable year both from service performed in such capacity and from the conduct of another trade or business, and the deductions allowed by chapter 1 of the Internal Revenue Code which are attributable to the gross income derived from service performed in such

capacity equal or exceed the gross income derived from service performed in such capacity, no part of the net earnings from self-employment (computed as prescribed in paragraph (c) of this section) for the taxable year shall be considered as derived from service performed in such capacity.

(3) The application of the rules set forth in subparagraphs (1) and (2) of this paragraph may be illustrated by the following examples:

Example (1). M was ordained as a minister in May 1963. During each of the taxable years 1963 and 1966, M, who makes his income tax returns on a calendar year basis, derives net earnings in excess of $400 from his activities as a minister. M has net earnings of $350 for each of the taxable years 1964 and 1965, $200 of which is derived from service performed by him as a minister. If M wishes to have the Federal old-age, survivors, and disability insurance system established by title II of the Social Security Act extended to his service as a minister, he must file the waiver certificate on or before the due date of his income tax return for 1966, or any extension thereof.

Example (2). M, who was ordained a minister in January 1965, is employed as a toolmaker by the XYZ Corporation for the taxable years 1965 and 1966 and also engages in activities as a minister on weekends. M makes his income tax return on the basis of a calendar year. During each of the taxable years 1965 and 1966, M receives wages of $4,800 from the XYZ Corporation and derives $400 (all of which constitutes net earnings from self-employment computed as prescribed in paragraph (c) of this section) from his activities as a minister. In such case if M wishes to have the Federal old-age, survivors, and disability insurance system established by title II of the Social Security Act extended to his services as a minister, he must file the waiver certificate on or before the due date of his income tax return for 1966, or any extension thereof. A waiver certificate filed after such date will be invalid. It should be noted that although by reason of section 1402(b)(1)(C) no part of the $400 for the taxable year 1965 represents ''self-employment income'', nevertheless the entire $400 constitutes ''net earnings from self-employment'' for purposes of fulfilling the requirements of section 1402(e)(2).

Example (3). M, who files his income tax returns on a calendar year basis, was ordained as a minister in June 1964. During 1964 he receives $410 for services performed in the exercise of his ministry. In addition to his ministerial services, M is engaged during the year 1964 in a mercantile venture from which he derives net earnings from self-employment in the amount of $1,000. The expenses incurred by him in connection with his ministerial services during 1964 and which are allowable deductions under Chapter 1 of the Internal Revenue Code amount to $410. During 1965 and 1966, M has net earnings from self-employment in amounts of $1,200 and $1,500, respectively, and some part of each of these amounts is from the exercise of his ministry. The deductions allowed in each of the years 1965 and 1966 by Chapter 1 which are attributable to the gross income derived by M from the exercise of his ministry in each of such years, respectively, do not equal or exceed such gross income in such year. If M wishes to have the Federal old-age, survivors, and disability insurance system established by Title II of the Social Security Act extended to his service as a minister, he must file a waiver certificate on or before the due date of his income tax return (including any extension thereof) for 1966.

Example (4). M, a licensed minister who makes his income tax returns on the basis of a calendar year, derived net earnings of $400 or more from the exercise of his ministry for two or more of the taxable years 1955 to 1965, inclusive. In such case, if M wishes to have the Federal old-age, survivors, and disability insurance system established by Title II of the Social Security Act extended to his services as a minister, he must file the waiver certificate on or before the due date (April 15, 1966) prescribed for filing his income tax return for 1965, or any extension thereof. A waiver certificate filed after such date will be invalid.

(b) *Effect of death.* Except as provided in §§ 1.1402(e)(5)–1, 1.1402(e) (5)–2, and 1.1402(e)(6)–1, the right of an individual to file a waiver certificate shall cease from his death. Thus, except as provided in such sections, the surviving spouse, administrator, or executor of a decedent shall not be permitted to file a waiver certificate for such decedent.

(c) *Computation of net earnings without regard to election.* For the purpose of this section net earnings from self-employment shall be determined without regard to the fact that, without an election under section 1402(e), the performance of services by a duly ordained, commissioned, or licensed minister of a church in the exercise of his ministry, or by a member of a religious order in the exercise of duties required by such order, or the performance of service by an individual in the exercise of his profession as a Christian Science practitioner, does not constitute a

trade or business for purposes of the tax on self-employment income.

[T.D. 6691, 28 FR 12796, Dec. 3, 1963, as amended by T.D. 6978, 33 FR 15938, Oct. 30, 1968]

§ 1.1402(e)(3)–1 Effective date of waiver certificate.

(a) *Filed before August 31, 1957*—(1) *In general.* A certificate on Form 2031 filed by an individual before August 31, 1957, in accordance with the provisions of section 1402(e) in effect at the time the certificate is filed, shall be effective for the first taxable year with respect to which it is filed, and all subsequent taxable years. In order for a certificate filed by an individual before August 31, 1957, to be effective under section 1402(e), the certificate must be made effective for either the first or second taxable year ending after 1954 in which the individual has net earnings from self-employment of $400 or more (determined as provided in paragraph (c) of § 1.1402(e)(2)–1) some part of which is derived from service of the character with respect to which an election may be made. However, a certificate on Form 2031, filed before August 31, 1957, even though filed within the time specified in paragraph (a)(1)(ii) of § 1.1402(e)(2)–1, may not be effective, except as provided in subparagraph (2) of this paragraph, for any taxable year with respect to which the due date for filing the individual's income tax return (including any extension thereof) has expired at the time such certificate is filed. Further, a certificate on Form 2031 may not be effective for any taxable year ending before 1955. In order for a certificate filed before August 31, 1957, except for the filing of a supplemental certificate, to be effective for the first or second taxable year ending after 1954 in which the individual has net earnings from self-employment (determined as provided in paragraph (c) of § 1.1402(e)(2)–1) some part of which is derived from service of the character with respect to which an election may be made, the certificate on Form 2031 must be filed on or before the due date for filing the income tax return of the individual for such first or second taxable year, respectively, or any extension thereof.

(2) *Supplemental certificates*—(i) *Filed before due date of 1958 return.* If under subparagraph (1) of this paragraph the certificate is effective only for the individual's third or fourth taxable year ending after 1954 and all succeeding taxable years, the individual may make such a certificate effective for his first taxable year ending after 1955 and all succeeding taxable years by filing a supplemental certificate on Form 2031. To be valid the supplemental certificate must be filed after August 30, 1957, and on or before the due date of the return (including any extension thereof) for his second taxable year ending after 1956 and must be otherwise in accordance with § 1.1402(e)(1)–1.

Example. M, who files his income tax returns on a calendar year basis, was ordained as a minister in 1956, and his net earnings from service performed in the exercise of his ministry during such year were $400 or more. M had no net earnings from the exercise of his ministry during 1957. On July 15, 1957, M filed a waiver certificate and indicated thereon that it was to become effective for the taxable year 1958. At the time of filing, the certificate was effective for 1958 and all succeeding taxable years. Since the certificate was not filed on or before April 15, 1957 (the due date of M's income tax return for the taxable year 1956), and since there was no extension of time for filing his 1956 income tax return, the certificate was not, at the time of filing, effective for the taxable year 1956. M files a supplemental certificate on April 15, 1958. By the filing of the supplemental certificate, the certificate filed by M on July 15, 1957, was made effective for the year 1956 and all succeeding taxable years.

(ii) *Filed after September 13, 1960, and on or before April 16, 1962.* If under subparagraph (1) of this paragraph the certificate is effective only for the individual's first taxable year ending after 1956 and all succeeding taxable years, the individual may make such certificate effective for his first taxable year ending after 1955 and all succeeding taxable years by:

(*a*) Filing a supplemental certificate on Form 2031 after September 13, 1960, and before April 17, 1962;

(*b*) Paying on or before April 16, 1962, the tax under section 1401 in respect of all the individual's self-employment income (except for underpayments of tax attributable to errors made in good faith) for his first taxable year ending after 1955; and

(*c*) By repaying on or before April 16, 1962, the amount of any refund (including any interest paid under section 6611) that has been made of any such tax which (but for section 1402(e)(3)(B)) is an overpayment.

Any payment or repayment described in section 1402(e)(3)(B) and in this subparagraph shall not constitute an overpayment within the meaning of section 6401 which relates to amounts treated as overpayments. See section 6401 and the regulations thereunder in part 301 of this chapter (Regulations on Procedure and Administration).

Example. M, who files his income tax returns on a calendar year basis, was ordained as a minister in 1956, and his net earnings from service performed in the exercise of his ministry during each of the years 1956 and 1957 were $400 or more. On July 15, 1957, M filed a waiver certificate which became effective, at the time of filing, for 1957 and all succeeding taxable years. Since the certificate was not filed on or before April 15, 1957 (the due date of M's income tax return for the taxable year 1956), and since there was no extension of time for filing his 1956 income tax return, the certificate was not, at the time of filing, effective for the taxable year 1956. M files a supplemental certificate on April 17, 1961. If, in addition to the filing of the supplemental certificate, M pays on or before April 16, 1962, the self-employment tax in respect of all his self-employment income (except for underpayments of tax attributable to errors made in good faith) for his taxable year 1956, and repays, on or before April 16, 1962, the amount of any refund (including any interest paid under section 6611) that has been made of any such tax which (but for section 1402(e)(3)(B)) is an overpayment, the certificate filed by M on July 15, 1957, becomes effective for the year 1956 and all succeeding taxable years.

(b) *Filed after August 30, 1957, and before the due date of the 1958 return.* A certificate on Form 2031 filed by an individual after August 30, 1957, but on or before the due date of the return (including any extension thereof) for his second taxable year ending after 1956, in accordance with the provisions of section 1402(e) in effect at the time the certificate is filed, shall be effective for his first taxable year ending after 1955, and all subsequent taxable years.

(c) *Filed after due date of 1958 return*—(1) *In general.* Except as otherwise provided in §1.1402(e)(5)–1 (applicable to certificates filed within the period September 14, 1960, to April 16, 1962, inclusive) and in subparagraphs (2) and (3) of this paragraph, a certificate on Form 2031 filed by an individual in accordance with the provisions of §§1.1402(e)(1)–1 and 1.1402(e)(2)–1, inclusive, after the due date of the return (including any extension thereof) for his second taxable year ending after 1956 shall be effective for the taxable year immediately preceding the earliest taxable year for which, at the time the certificate is filed, the period for filing a return (including any extension thereof) has not expired, and for all succeeding taxable years.

Example. M, a duly ordained minister of a church, makes his income tax returns on the basis of a calendar year. M has not been granted an extension of time for filing any return. On April 15, 1963, the due date of his income tax return for 1962, M files a waiver certificate pursuant to §1.1402(e)(1)–1 and within the time limitation set forth in §1.1402(e)(2)–1. On April 15, 1963, the year 1962 is the earliest taxable year for which the period for filing a return has not expired. Consequently, M's certificate is effective for 1961 and all succeeding taxable years. M must report and pay any self-employment tax due for 1961 and 1962. (The tax, if any, for 1962 is due on April 15, 1963.) Inasmuch as the due date of the tax for 1961 is April 16, 1962, M must pay interest on any tax due for 1961. For provisions relating to such interest, see §301.6601–1 of Part 301 of this chapter (Regulations on Procedure and Administration).

(2) *Filed after October 13, 1964, and on or before the due date of return for second taxable year ending after 1962.* A certificate on Form 2031 filed by an individual in accordance with the provisions of §§1.1402(e)(1)–1 and 1.1402(e)(2)–1, inclusive, after October 13, 1964, and on or before the due date of the return (including any extension thereof) for his second taxable year ending after 1962 (April 15, 1965, in the case of a calendar year taxpayer who has not been granted an extension of time for filing his income tax return for 1964) shall be effective for his first taxable year ending after 1961 and all succeeding taxable years.

Example. M, a duly ordained minister of a church, makes his income tax returns on the basis of a calendar year. M has not been granted an extension of time for filing any return. On April 15, 1965, the due date of his income tax return for 1964, M files a waiver certificate pursuant to §1.1402(e)(1)–1 and

within the time limitation set forth in § 1.1402(e)(2)–1. M's certificate is effective for 1962 and all succeeding taxable years, and he must report and pay any self-employment tax due for 1962, 1963, and 1964. (The tax, if any, for 1964 is due on April 15, 1965.) Inasmuch as the due dates of the tax for 1962 and 1963 are April 15, 1963, and April 15, 1964, respectively, M must pay interest on any tax due for 1962 or 1963. For provisions relating to such interest, see § 301.6601–1 of Part 301 of this chapter (Regulations on Procedure and Administration).

(3) *Filed after July 30, 1965, and on or before the due date of return for second taxable year ending after 1963.* A certificate on Form 2031 filed by an individual in accordance with the provisions of §§ 1.1402(e)(1)–1 and 1.1402(e)(2)–1, inclusive, after July 30, 1965, and on or before the due date of the return (including any extension thereof) for his second taxable year ending after 1963 (Apr. 15, 1966, in the case of a calendar year taxpayer who has not been granted an extension of time for filing his income tax return for 1965) shall be effective for his first taxable year ending after 1962 and all succeeding taxable years.

Example. M, a duly ordained minister of a church, makes his income tax returns on the basis of a calendar year. M has not been granted an extension of time for filing any return. On April 15, 1966, the due date of his income tax return for 1965, M files a waiver certificate pursuant to § 1.1402(e)(1)–1 and within the time limitation set forth in § 1.1402(e)(2)–1. M's certificate is effective for 1963 and all succeeding taxable years, and he must report and pay any self-employment tax due for 1963, 1964, and 1965. (The tax, if any, for 1965 is due on April 15, 1966.) Inasmuch as the due dates of the tax for 1963 and 1964 are April 15, 1964, and April 15, 1965, respectively, M must pay interest on any tax due for 1963 or 1964. For provisions relating to such interest, see § 301.6601–1 of Part 301 of this chapter (Regulations on Procedure and Administration).

(d) *Election irrevocable.* An election which has become effective pursuant to this section is irrevocable. A certificate may not be withdrawn after June 30, 1961.

[T.D. 6691, 28 FR 12796, Dec. 3, 1963, as amended by T.D. 6978, 33 FR 15939, Oct. 30, 1968]

§ 1.1402(e)(4)–1 Treatment of certain remuneration paid in 1955 and 1956 as wages.

If in 1955 or 1956 an individual was paid remuneration for service described in section 3121(b)(8)(A) which was erroneously treated by the organization employing him (under a certificate filed by such organization pursuant to section 3121(k) or the corresponding section of prior law) as employment, within the meaning of the Federal Insurance Contributions Act (Chapter 21 of the Internal Revenue Code), and if on or before August 30, 1957, the taxes imposed by sections 3101 and 3111 were paid (in good faith and upon the assumption that the insurance system established by title II of the Social Security Act had been extended to such service) with respect to any part of the remuneration paid to such individual for such service, then the remuneration with respect to which such taxes were paid, and with respect to which no credit or refund of such taxes (other than a credit or refund which would be allowable if such service had constituted employment) has been obtained either by the employer or the employee on or before August 30, 1957, shall be deemed, for purposes of the Self-Employment Contributions Act of 1954 and the Federal Insurance Contributions Act, to constitute remuneration paid for employment and not net earnings from self-employment. For regulations relating to section 3121(b)(8)(A) and (k), see §§ 31.3121(b)(8)–1 and 31.3121(k)–1 of subpart B of part 31 of this chapter (Employment Tax Regulations).

§ 1.1402(e)(5)–1 Optional provision for certain certificates filed before April 15, 1962.

(a) *Certificates.* (1) The optional provision contained in section 1402(e)(5)(A) may be applied to a certificate on Form 2031 filed within the period September 14, 1960, to April 16, 1962, inclusive, in the case of a duly ordained, commissioned, or licensed minister of a church, a member of a religious order (other than a member of a religious order who has taken a vow of poverty as a member of such order), or a Christian Science practitioner, who has derived net earnings, in any taxable year

ending after 1954 and before 1960, from the performance of service in the exercise of his ministry, in the exercise of duties required by his religious order, or in the exercise of his profession as a Christian Science practitioner, respectively, and who has reported such earnings as self-employment income on a return filed before September 14, 1960, and on or before the date prescribed for filing such return (including any extension thereof). The certificate may be filed by such minister, member of a religious order, or Christian Science practitioner or by a fiduciary acting for such individual or his estate, or by his survivor within the meaning of section 205(c)(1)(C) of the Social Security Act, and it must be filed after September 13, 1960, and on or before April 16, 1962. Subject to the conditions stated in subparagraph (2) of this paragraph, such certificate may be effective at the election of the person filing it, for the first taxable year ending after 1954 and before 1960 for which a return, as described in the first sentence of this subparagraph, was filed, and for all succeeding taxable years, rather than for the period prescribed in §1.1402(e)(3)–1. The election for retroactive application of the certificate may be made by indicating on the certificate the first taxable year for which it is to be effective and that such year is the first taxable year ending after 1954 and before 1960 for which the minister, member of a religious order, or Christian Science practitioner filed an income tax return on which he reported net earnings for such year from the exercise of his ministry, the exercise of duties required by his religious order, or the exercise of his profession as a Christian Science practitioner, as the case may be, and by fulfilling the conditions prescribed in subparagraph (2) of this paragraph.

(2) A certificate to which subparagraph (1) of this paragraph relates may be effective for a taxable year prior to the taxable year immediately preceding the earliest taxable year for which, at the time the certificate is filed, the period for filing a return (including any extension thereof) has not expired, only if the following conditions are met:

(i) The tax under section 1401 is paid on or before April 16, 1962, in respect of all self-employment income (whether or not derived from the performance of service by the individual in the exercise of his ministry, in the exercise of duties required by his religious order, or in the exercise of his profession as a Christian Science practitioner, as the case may be) for the first taxable year ending after 1954 and before 1960 for which such individual has filed a return, as described in subparagraph (1) of this paragraph, and for each succeeding taxable year ending before 1960; and

(ii) In any case where refund has been made of any such tax which (but for section 1402(e)(5)) is an overpayment, the amount refunded (including any interest paid under section 6611) is repaid on or before April 16, 1962. For regulations under section 6611 (relating to interest on overpayments), see §301.6611–1 of part 301 of this chapter (Regulations on Procedure and Administration).

(b) *Supplemental certificates.* (1) Subject to the conditions stated in subparagraph (2) of this paragraph, a certificate on Form 2031 filed on or before September 13, 1960, by a minister, member of a religious order, or a Christian Science practitioner described in paragraph (a)(1) of this section and which (but for section 1402(e)(5)(B)) is ineffective for the first taxable year ending after 1954 and before 1959 for which such a return as described in paragraph (a)(1) of this section was filed by such individual, shall be effective for such first taxable year and for all succeeding taxable years, provided a supplemental certificate is filed by such individual or by a fiduciary acting for him or his estate, or by his survivor (within the meaning of section 205(c)(1)(C) of the Social Security Act), after September 13, 1960 and on or before April 16, 1962.

(2) The filing of a supplemental certificate pursuant to subparagraph (1) of this paragraph will give retroactive effect to a certificate to which such subparagraph applies only if the following conditions are met:

(i) The tax under section 1401 is paid on or before April 16, 1962, in respect of all self-employment income (whether

or not attributable to earnings as a minister, member of a religious order, or Christian Science practitioner) for the first taxable year for which the certificate is retroactively effective and for each subsequent year ending before 1959; and

(ii) In any case where refund has been made of any such tax which (but for section 1402(d)(5)) is an overpayment, the amount refunded (including any interest paid under section 6611) is repaid on or before April 16, 1962.

(c) *Underpayment of tax.* For purposes of this section, any underpayment of the tax which is attributable to an error made in good faith will not invalidate an election which is otherwise valid.

(d) *Nonapplicability of section 6401.* Any payment or repayment described in paragraph (a)(2) or paragraph (b)(2) of this section shall not constitute an overpayment within the meaning of section 6401 which relates to amounts treated as overpayments. For the provisions of section 6401 and the regulations thereunder, see section 6401 and § 301.6401–1 of part 301 of this chapter (Regulations on Procedure and Administration).

§ 1.1402(e)(5)–2 Optional provisions for certain certificates filed on or before April 17, 1967.

(a) *In general*—(1) *General rule.* Section 1402(e)(5), as amended by the Social Security Amendments of 1965, applies only in the case of a duly ordained, commissioned, or licensed minister of a church, a member of a religious order (other than a member of a religious order who has taken a vow of poverty as a member of such order), or a Christian Science practitioner, who has derived net earnings in any taxable year ending after 1954 from the performance of service in the exercise of his ministry, in the exercise of duties required by his religious order, or in the exercise of his profession as a Christian Science practitioner, respectively, and who has reported such earnings as self-employment income on a return filed on or before the date prescribed for filing such return (including any extension thereof).

(2) *Supplemental certificate.* Subject to the conditions stated in subparagraph (4) of this paragraph, a certificate on Form 2031 filed on or before April 15, 1966, by a minister, member of a religious order, or a Christian Science practitioner described in subparagraph (1) of this paragraph and which (but for section 1402(e)(5)(A)) is ineffective for the first taxable year ending after 1954 for which a return described in subparagraph (1) of this paragraph was filed by such individual, shall be effective for such first taxable year and for all succeeding taxable years, provided a supplemental certificate is filed by such individual or by a fiduciary acting for him or his estate, or by his survivor (within the meaning of section 205(c)(1)(C) of the Social Security Act), after July 30, 1965 (the date of enactment of the Social Security Amendments of 1965), and on or before April 17, 1967.

(3) *Certificate filed by survivor.* A survivor (within the meaning of section 205(c)(1)(C) of the Social Security Act) of an individual who:

(i) Died on or before April 15, 1966,

(ii) Was a minister, member of a religious order, or a Christian Science practitioner described in subparagraph (1) of this paragraph,

(iii) Has filed a return as described in subparagraph (1) of this paragraph for a taxable year ending after 1954, and

(iv) Had not filed a valid waiver certificate on Form 2031,

may file a certificate on Form 2031 on behalf of such individual. The certificate must be filed after July 30, 1965 (the date of enactment of the Social Security Amendments of 1965), and on or before April 17, 1967. Subject to the conditions stated in subparagraph (4) of this paragraph, such certificate shall be effective for the first taxable year ending after 1954 for which a return, as described in subparagraph (1) of this paragraph, was filed by such individual and for all succeeding taxable years.

(4) *Applicable conditions.* A supplemental certificate referred to in subparagraph (2) of this paragraph and a certificate referred to in subparagraph (3) of this paragraph shall be effective only if the following conditions are met:

(i) The tax under section 1401 is paid on or before April 17, 1967, in respect of all self-employment income (whether

or not attributable to earnings as a minister, member of a religious order, or Christian Science practitioner) for the first taxable year ending after 1954 for which the individual (by or in respect of whom the supplemental certificate or certificate is filed) has filed a return, as described in paragraph (1) of this paragraph, and for each succeeding taxable year ending before January 1, 1966; and

(ii) In any case where refund has been made of any such tax which (but for section 1402(e)(5)) is an overpayment, the amount refunded (including any interest paid under section 6611) is repaid on or before April 17, 1967. For regulations under section 6611 (relating to interest on overpayments), see § 301.6611–1 of part 301 of this chapter (Regulations on Procedure and Administration).

(b) *Underpayment of tax.* For purposes of this section, any underpayment of the tax which is attributable to an error made in good faith will not invalidate an election which is otherwise valid.

(c) *Nonapplicability of section 6401.* Any payment or repayment described in paragraph (a)(4) of this section shall not constitute an overpayment within the meaning of section 6401 which relates to amounts treated as overpayments. For the provisions of section 6401 and the regulations thereunder, see section 6401 and § 301.6401–1 of part 301 of this chapter (Regulations on Procedure and Administration).

(d) *Applicability of §§ 1.1402(e) (5)–1 and 1.1402(e)(6)–1.* The provisions of section 1402(e) (5) and (6) (in effect prior to July 30, 1965, the date of enactment of the Social Security Amendments of 1965) and §§ 1.1402(e) (5)–1 and 1.1402(e)(6)–1 shall apply with respect to any certificate filed pursuant to such sections if a supplemental certificate is not filed with respect to such certificate as provided in this section.

[T.D. 6978, 33 FR 15939, Oct. 30, 1968]

§ 1.1402(e)(6)–1 Certificates filed by fiduciaries or survivors on or before April 15, 1962.

In any case in which an individual whose death has occurred after September 12, 1960, and before April 16, 1962, derived earnings from the performance of services as a duly ordained, commissioned, or licensed minister of a church in the exercise of his ministry, as a member of a religious order (other than a member of a religious order who has taken a vow of poverty as a member of such order) in the exercise of duties required by such order, or in the exercise of his profession as a Christian Science practitioner, a waiver certificate on Form 2031 may be filed after June 30, 1961 (the date of enactment of the Social Security Amendments of 1961), and on or before April 16, 1962, by a fiduciary acting for such individual's estate or by such individual's survivor within the meaning of section 205(c)(1)(C) of the Social Security Act. Such certificates shall be effective for the period prescribed in section 1402(e)(3)(A) (see § 1.1402(e)(3)–1(c)) as if filed by the individual on the date of his death.

§ 1.1402(f)–1 Computation of partner's net earnings from self-employment for taxable year which ends as result of his death.

(a) *Taxable years ending after August 28, 1958*—(1) *In general.* The rules for the computation of a partner's net earnings from self-employment are set forth in paragraphs (d) to (g), inclusive, of § 1.1402(a)–2. In addition to the net earnings from self-employment computed under such rules for the last taxable year of a deceased partner, if a partner's taxable year ends after August 28, 1958, solely because of death, and on a day other than the last day of the partnership's taxable year, the deceased partner's net earnings from self-employment for such year shall also include so much of the deceased partner's distributive share of partnership ordinary income or loss (see subparagraph (3) of this paragraph) for the taxable year of the partnership in which his death occurs as is attributable to an interest in the partnership prior to the month following the month of his death.

(2) *Computation.* (i) The deceased partner's distributive share of partnership ordinary income or loss for the partnership taxable year in which he died shall be determined by applying the rules contained in paragraphs (d) to

(g), inclusive, of § 1.1402(a)–2, except that paragraph (e) shall not apply.

(ii) The portion of such distributive share to be included under this section in the deceased partner's net earnings from self-employment for his last taxable year shall be determined by treating the ordinary income or loss constituting such distributive share as having been realized or sustained ratably over the period of the partnership taxable year during which the deceased partner had an interest in the partnership and during which his estate, or any other person succeeding by reason of his death to rights with respect to his partnership interest, held such interest in the partnership or held a right with respect to such interest. The amount to be included under this section in the deceased partner's net earnings from self-employment for his last taxable year will, therefore, be determined by multiplying the deceased partner's distributive share of partnership ordinary income or loss for the partnership taxable year in which he died, as determined under subdivision (i) of this subparagraph, by a fraction, the denominator of which is the number of calendar months in the partnership taxable year over which the ordinary income or loss constituting the deceased partner's distributive share of partnership income or loss for such year is treated as having been realized or sustained under the preceding sentence and the numerator of which is the number of calendar months in such partnership taxable year that precede the month following the month of his death.

(3) *Definition of ''deceased partner's distributive share''.* For the purpose of this section, the term ''deceased partner's distributive share'' includes the distributive share of his estate or of any other person succeeding, by reason of his death, to rights with respect to his partnership interest. It does not include any share attributable to a partnership interest which was not held by the deceased partner at the time of his death. Thus, if a deceased partner's estate should acquire an interest in a partnership additional to the interest to which it succeeded upon the death of the deceased partner, the amount of the distributive share attributable to such additional interest acquired by the estate would not be included in computing the ''deceased partner's distributive share'' of the partnership's ordinary income or loss for the partnership taxable year.

(4) *Examples.* The application of this paragraph may be illustrated by the following examples:

Example (1). B, an individual who files his income tax returns on the calendar year basis, is a member of the ABC partnership, the taxable year of which ends on June 30. B dies on October 17, 1958, and his estate succeeds to his partnership interest and continues as a partner in its own right under local law until June 30, 1959. B's distributive share of the partnership's ordinary income, as determined under paragraphs (d) to (g), inclusive, of § 1.1402(a)–2, for the taxable year of the partnership ended June 30, 1958 is $2,400. His distributive share, including the share of his estate, of such partnership's ordinary income, as determined under paragraphs (d) to (g), inclusive, of § 1.1402(a)–2 (with the exception of paragraph (e)), for the taxable year of the partnership ended June 30, 1959 is $4,500. The portion of such $4,500 attributable to an interest in the partnership prior to the month following the month in which he died is $4,500×4/12 (4 being the number of months in the partnership taxable year in which B died which precede the month following the month of his death and 12 being the number of months in such partnership taxable year in which B and his estate had an interest in the partnership) or $1,500. The amount to be included in the deceased partner's net earnings from self-employment for his last taxable year is $3,900 ($2,400 plus $1,500).

Example (2). If in the preceding example B's estate is entitled to only $1,000, the amount of B's distributive share of partnership ordinary income for the period July 1, 1958 through October 17, 1958, such $1,000 is considered to have been realized ratably over the period preceding B's death and will be included in B's net earnings from self-employment for his last taxable year.

Example (3). X, who reports his income on a calendar year basis, is a member of a partnership which also reports its income on a calendar year basis. X dies on June 30, 1959, and his estate succeeds to his partnership interest and continues as a partner in its own right under local law. On September 15, 1959, X's estate sells the partnership interest to which it succeeded on the death of X. X's distributive share of partnership income for 1959 is $5,500. $600 of such amount is X's share of the gain from the sale of a capital asset which occurs on May 1, 1959, and $400 of such amount is the estate's share of the gain from the sale of a capital asset which occurs on

July 15, 1959. The remainder of such amount is income from services rendered. X's distributive share of partnership ordinary income for 1959, as determined under paragraphs (d) to (g), inclusive, of § 1.1402(a)–2 (with the exception of paragraph (e)), is $4,500 ($5,500 minus $1,000). The portion of such share attributable to an interest in the partnership prior to the month following the month of his death is $4,500×6/8.5 (6 being the number of months in the partnership taxable year in which X died as precede the month following the month of his death and 8.5 being the number of months in such partnership taxable year in which X and his estate had an interest in the partnership) or $3,176.47.

(b) *Options available to farmers*—(1) *Special rule.* In determining whether the optional method available to a member of a farm partnership in computing his net earnings from self-employment may be applied, and in applying such method, it is necessary to determine the partner's distributive share of partnership gross income and the partner's distributive share of income described in section 702(a)(9). See section 1402(a) and § 1.1402(a)–15. If section 1402(f) and this section apply, or may be made applicable under section 403(b)(2) of the Social Security Amendments of 1958 and paragraph (c) of this section, for the last taxable year of a deceased partner, such partner's distributive share of income described in section 702(a)(9) for his last taxable year shall be determined by including therein any amount which is included under section 1402(f) and this section in his net earnings from self-employment for such taxable year. Such a partner's distributive share of partnership gross income for his last taxable year shall be determined by including therein so much of the deceased partner's distributive share (see paragraph (a)(3) of this section) of partnership gross income, as defined in section 1402(a) and paragraph (b) of § 1.1402(a)–15, for the partnership taxable year in which he died as is attributable to an interest in the partnership prior to the month following the month of his death. Such allocation shall be made in the same manner as is prescribed in paragraph (a)(2) of this section for determining the portion of a deceased partner's distributive share of partnership ordinary income or loss to be included under section 1402(f) and this section in his net earnings from self-employment for his last taxable year.

(2) *Examples.* The principles set forth in this paragraph may be illustrated by the following examples:

Example (1). X, an individual who files his income tax returns on a calendar year basis, is a member of the XYZ farm partnership, the taxable year of which ends on March 31. X dies on May 31, 1967, and his estate succeeds to his partnership interest and continues as a partner in its own right under local law until March 31, 1968. X's distributive share of the partnership's ordinary income, determined under paragraphs (d) to (g), inclusive, of § 1.1402(a)–2, for the taxable year of the partnership ended March 31, 1967, is $1,600. His distributive share, including the share of his estate, of such partnership's ordinary loss as determined under paragraphs (d) to (g), inclusive, of § 1.1402(a)–2 (with the exception of paragraph (e)), for the taxable year of the partnership ended March 31, 1968, is $1,200. The portion of such $1,200 attributable to an interest in the partnership prior to the month following the month in which he died is $1,200×2/12 (2 being the number of months in the partnership taxable year in which X died which precede the month following the month of his death and 12 being the number of months in such partnership taxable year in which X and his estate had an interest in the partnership) or $200. X is also a member of the ABX farm partnership, the taxable year of which ends on May 31. His distributive share of the partnership loss described in section 702(a)(9) for the partnership taxable year ending May 31, 1967, is $300. Section 1402(f) and this section do not apply with respect to such $300 since X's last taxable year ends, as a result of his death, with the taxable year of the ABX partnership. Under this paragraph the $200 loss must be included in determining X's distributive share of XYZ partnership income described in section 702(a)(9) for the purpose of applying the optional method available to farmers for computing net earnings from self-employment. Further, the resulting $1,400 of income must be aggregated, pursuant to paragraph (c) of § 1.1402(a)–15, with the $300 loss, X's distributive share of ABX partnership loss described in section 702(a)(9), for purposes of applying such option. The representative of X's estate may exercise the option described in paragraph (a)(2)(ii) of § 1.1402(a)–15, provided the portion of X's distributive share of XYZ partnership gross income for the taxable year ended March 31, 1968, attributable to an interest in the partnership prior to the month following the month in which he died (the allocation being made in the manner prescribed for allocating his $1,200 distributive share of XYZ partnership loss

for such year), when aggregated with his distributive share of XYZ partnership gross income for the partnership taxable year ended March 31, 1967, and with his distributive share of ABX partnership gross income for the partnership taxable year ended May 31, 1967, results in X having more than $2,400 of gross income from the trade or business of farming. If such aggregate amount of gross income is not more than $2,400, the option described in paragraph (a)(2)(i) of § 1.1402(a)–15, is available.

Example (2). A, a sole proprietor engaged in the business of farming, files his income tax returns on a calendar year basis. A is also a member of a partnership engaged in an agricultural activity. The partnership files its returns on the basis of a fiscal year ending March 31. A dies June 29, 1967. A's gross income from farming as a sole proprietor for the 6-month period comprising his taxable year which ends because of death is $1,600 and his actual net earnings from self-employment based thereon are $400. As of March 31, 1967, A's distributive share of the gross income of the farm partnership is $2,200 and his distributive share of income described in section 702(a)(9) based thereon is $1,000. The amount of A's distributive share of the partnership's ordinary income for its taxable year ended March 31, 1968, which may be included in his net earnings from self-employment under section 1402(f) and paragraph (a) of this section is $300. The amount of the deceased partner's distributive share of partnership gross income attributable to an interest in the partnership prior to the month following the month of his death as is determined, pursuant to subparagraph (1) of this paragraph, under paragraph (a) of this section is $2,000. An aggregation of the above figures produces a gross income from farming of $5,800 and actual net earnings from self-employment of $1,700. Under these circumstances none of the options provided by section 1402(a) may be used. If the actual net earnings from self-employment had been less than $1,600, the option described in paragraph (a)(2)(ii) of § 1.1402(a)–15 would have been available.

(c) *Taxable years ending after 1955 and on or before August 28, 1958*—(1) *Requirement of election.* If a partner's taxable year ended, as a result of his death, after 1955 and on or before August 28, 1958, the rules set forth in paragraph (a) of this section may be made applicable in computing the deceased partner's net earnings from self-employment for his last taxable year provided that:

(i) Before January 1, 1960, there is filed, by the person designated in section 6012(b)(1) and paragraph (b)(1) of § 1.6012–3, a return (or amended return) of the tax imposed by chapter 2 for the taxable year ending as a result of death, and

(ii) Such return, if filed solely for the purpose of reporting net earnings from self-employment resulting from the enactment of section 1402(f), is accompanied by the amount of tax attributable to such net earnings.

(2) *Administrative rule of special application.* Notwithstanding the provisions of sections 6601, 6651, and 6653 (see such sections and the regulations thereunder) no interest or penalty shall be assessed or collected on the amount of any self-employment tax due solely by reason of the operation of section 1402(f) in the case of an individual who died after 1955 and before August 29, 1958.

[T.D. 6691, 28 FR 12796, Dec. 3, 1963, as amended by T.D. 6993, 34 FR 830, Jan. 18, 1969]

§ 1.1402(g)–1 Treatment of certain remuneration erroneously reported as net earnings from self-employment.

(a) *General rule.* If an amount is erroneously paid as self-employment tax, for any taxable year ending after 1954 and before 1962, with respect to remuneration for service (other than service described in section 3121(b)(8)(A)) performed in the employ of an organization described in section 501(c)(3) and exempt from income tax under section 501(a), and if such remuneration is reported as self-employment income on a return filed on or before the due date prescribed for filing such return (including any extension thereof), the individual who paid such amount (or a fiduciary acting for such individual or his estate, or his survivor (within the meaning of section 205(c)(1)(C) of the Social Security Act)), may request that such remuneration be deemed to constitute net earnings from self-employment. If such request is filed during the period September 14, 1960, to April 16, 1962, inclusive, and on or after the date on which the organization which paid such remuneration to such individual for services performed in its employ has filed, pursuant to section 3121(k), a certificate waiving exemption from taxes under the Federal Insurance Contributions Act, and if no

credit or refund of any portion of the amount erroneously paid for such taxable year as self-employment tax (other than a credit or refund which would be allowable if such tax were applicable with respect to such remuneration) has been obtained before the date on which such request is filed or, if obtained, the amount credited or refunded (including any interest under section 6611) is repaid on or before such date, then, for purposes of the Self-Employment Contributions Act of 1954 and the Federal Insurance Contributions Act, any amount of such remuneration which is paid to such individual before the calendar quarter in which such request is filed (or before the succeeding quarter if such certificate first becomes effective with respect to services performed by such individual in such succeeding quarter) and with respect to which no tax (other than an amount erroneously paid as tax) has been paid under the Federal Insurance Contributions Act, shall be deemed to constitute net earnings from self-employment and not remuneration for employment. If the certificate filed by such organization pursuant to section 3121(k) is not effective with respect to services performed by such individual on or before the first day of the calendar quarter in which the request is filed, then, for purposes of section 3121(b)(8)(B) (ii) and (iii), such individual shall be deemed to have become an employee of such organization (or to have become a member of a group, described in section 3121(k)(1)(E), of employees of such organization) on the first day of the succeeding quarter.

(b) *Request for validation.* (1) No particular form is prescribed for making a request under paragraph (a) of this section. The request should be in writing, should be signed and dated by the person making the request, and should indicate clearly that it is a request that, pursuant to section 1402(g) of the Code, remuneration for service described in section 3121(b)(8) (other than service described in section 3121(b)(8)(A)) erroneously reported as self-employment income for one or more specified years be deemed to constitute net earnings from self-employment and not remuneration for employment. In addition, the following information shall be shown in connection with the request:

(i) The name, address, and social security account number of the individual with respect to whose remuneration the request is made.

(ii) The taxable year or years (ending after 1954 and before 1962) to which the request relates.

(iii) A statement that the remuneration was erroneously reported as self-employment income on the individual's return for each year specified and that the return was filed on or before its due date (including any extension thereof).

(iv) Location of the office of the district director with whom each return was filed.

(v) A statement that no portion of the amount erroneously paid by the individual as self-employment tax with respect to the remuneration has been credited or refunded (other than a credit or refund which would have been allowable if the tax had been applicable with respect to the remuneration); or, if a credit or refund of any portion of such amount has been obtained, a statement identifying the credit or refund and showing how and when the amount credited or refunded, together with any interest received in connection therewith, was repaid.

(vi) The name and address of the organization which paid the remuneration to the individual.

(vii) The date on which the organization filed a waiver certificate on Form SS–15, and the location of the office of the district director with whom it was filed.

(viii) The date on which the certificate became effective with respect to services performed by the individual.

(ix) If the request is made by a person other than the individual to whom the remuneration was paid, the name and address of that person and evidence which shows the authority of such person to make the request.

(2) The request should be filed with the district director of internal revenue with whom the latest of the returns specified in the request pursuant to subparagraph (1)(iii) of this paragraph was filed.

(c) *Cross references.* For regulations relating to section 3121 (b)(8) and (k), see §§31.3121(b)(8)–2 and 31.3121(k)–1 of

subpart B of part 31 of this chapter (Employment Tax Regulations). For regulations relating to exemption from income tax of an organization described in section 501(c)(3), see § 1.501(c)(3)–1.

§ 1.1402(h)–1 Members of certain religious groups opposed to insurance.

(a) *In general.* An individual—(1) Who is a member of a recognized religious sect or division thereof and,

(2) Who is an adherent of established tenets or teachings of such sect or division and by reason thereof is conscientiously opposed to acceptance of the benefits of any private or public insurance which makes payments in the event of death, disability, old age, or retirement or makes payments toward the cost of, or provides services for, medical care (including the benefits of any insurance system established by the Social Security Act),

may file an application for exemption from the tax under section 1401. The form of insurance to which section 1402(h) and this section refer does not include liability insurance of a kind that provides only for the protection of other persons, or property of other persons, who may be injured or damaged by or on property belonging to, or by an action of, an individual who otherwise meets the requirements of this section. An application for exemption under section 1402(h) and this section shall be made in the manner provided in paragraph (b) of this section and within the time specified in paragraph (c) of this section. For provisions relating to the filing of an application for exemption by a fiduciary or survivor, see paragraph (d) of this section.

(b) *Application for exemption.* The application for exemption shall be filed on Form 4029 in duplicate with the internal revenue official or office designated on the form. The filing of a return by a member of a religious group opposed to insurance showing no self-employment income or self-employment tax shall not be construed as an application for exemption referred to in paragraph (a) of this section.

(c) *Time limitation for filing application for exemption*—(1) *Taxable years ending before December 31, 1967.* A member of a religious group opposed to insurance within the meaning of paragraph (a) of this section:

(i) Who has self-employment income (determined without regard to subsections (c)(6) and (h) of section 1402 and this section) for one or more taxable years ending before December 31, 1967, and

(ii) Who desires to be exempt from the payment of the self-employment tax under section 1401,

must file the application for exemption on or before December 31, 1968.

(2) *Taxable year ending on or after December 31, 1967*—(i) *General rule.* Except as provided in subdivision (ii) of this subparagraph, a member of a religious group opposed to insurance within the meaning of paragraph (a) of this section:

(*a*) Who has no self-employment income (determined without regard to subsections (c)(6) and (h) of section 1402 and this section) for any taxable year ending before December 31, 1967, and

(*b*) Who desires to be exempt from the payment of the self-employment tax under section 1401 for any taxable year ending on or after December 31, 1967,

must file the application for exemption on or before the due date of the income tax return (see section 6072), including any extension thereof (see section 6081), for the first taxable year ending on or after December 31, 1967, for which he has self-employment income (determined without regard to subsections (c)(6) and (h) of section 1402 and this section.

(ii) *Exception to general rule.* If an individual to whom subdivision (i) of this subparagraph applies:

(*a*) Is notified in writing by a district director of internal revenue or the Director of International Operations that he has not filed the application for exemption on or before the date specified in such subdivision (i), and

(*b*) Files the application for exemption on or before the last day of the third calendar month following the calendar month in which he is so notified,

such application shall be considered a timely filed application for exemption.

(d) *Application by fiduciary or survivor.* If an individual who was a member of a religious group opposed to insurance dies before the expiration of the time

prescribed in section 1402(h)(2) and paragraph (c) of this section during which an application could have been filed by him, an application for exemption with respect to such deceased individual may be filed by a fiduciary acting for such individual's estate or by such individual's survivor within the meaning of section 205(c)(1)(C) of the Social Security Act. An application for exemption with respect to a deceased individual executed by a fiduciary or survivor may be approved only if it could have been approved if the individual were not deceased and had filed the application on the date the application was filed by the fiduciary or executor.

(e) *Approval of application for exemption*—(1) *In general.* The filing of an application for exemption on Form 4029 by a member of a religious group opposed to insurance does not constitute an exemption from the payment of the tax on self-employment income. An individual who files such an application is exempt from the payment of the tax only if the application is approved by the official with whom the application is required to be filed (see paragraph (b) of this section).

(2) *Conditions relating to approval or disapproval of application.* An application for exemption on Form 4029 will not be approved unless the Secretary of Health, Education, and Welfare finds with respect to the religious sect or division thereof of which the individual filing the application is a member:

(i) That the sect or division thereof has the established tenets or teachings by reason of which the individual applicant is conscientiously opposed to the benefits of insurance of the type referred to in section 1402(h) (see paragraph (a) of this section),

(ii) That it is the practice, and has been for a period of time which the Secretary of Health, Education, and Welfare deems to be substantial, for members of such sect or division thereof to make provisions for their dependent members which, in the judgment of such Secretary, is reasonable in view of the general level of living of the members of the sect or division thereof; and

(iii) That the sect or division thereof has been in existence continuously since December 31, 1950.

In addition, an application for exemption on Form 4029 will not be approved if any benefit or other payment under title II of title XVIII of the Social Security Act became payable (or, but for section 203, relating to reduction of insurance benefits, or 222(b), relating to reduction of insurance benefits on account of refusal to accept rehabilitation services, of the Social Security Act would have been payable) at or before the time of the filing of the application for exemption. Any determination required to be made pursuant to the preceding sentence will be made by the Secretary of Health, Education, and Welfare.

(f) *Period for which exemption is effective*—(1) *General rule.* An application for exemption shall be in effect (if approved as provided in paragraph (e) of this section) for all taxable years beginning after December 31, 1950, except as otherwise provided in subparagraph (2) of this paragraph.

(2) *Exceptions.* An application for exemption referred to in subparagraph (1) of this paragraph shall not be effective for any taxable year which:

(i) Begins (*a*) before the taxable year in which the individual filing the application first met the requirements of subparagraphs (1) and (2) of paragraph (a) of this section, or (*b*) before the time as of which the Secretary of Health, Education, and Welfare finds that the sect or division thereof of which the individual is a member met the requirements of subparagraphs (C) and (D) of section 1402(h)(1) (see subdivisions (i) and (ii) of paragraph (e)(2) of this section), or

(ii) Ends (*a*) after the time at which the individual filing the application ceases to meet the requirements of subparagraphs (1) and (2) of paragraph (a) of this section, or (*b*) after the time as of which the Secretary of Health, Education, and Welfare finds that the sect or division thereof of which the individual is a member ceases to meet the requirements of subparagraphs (C) and (D) of section 1402(h)(1) (see subdivisions (i) and (ii) of paragraph (e)(2) of this section).

(g) *Refund or credit.* An application for exemption on Form 4029 filed on or before December 31, 1968 (if approved as

provided in paragraph (e) of this section), shall constitute a claim for refund or credit of any tax on self-employment income under section 1401 (or under section 480 of the Internal Revenue Code of 1939) paid or incurred in respect of any taxable year beginning after December 31, 1950, and ending before December 31, 1967, for which an exemption is granted. Refund or credit of any tax referred to in the preceding sentence may be made, pursuant to the provisions of section 501(c) of the Social Security Amendments of 1967 (81 Stat. 933), notwithstanding that the refund or credit would otherwise be prevented by operation of any law or rule of law. No interest shall be allowed or paid in respect of any refund or credit made or allowed in connection with a claim for refund or credit made on Form 4029.

[T.D. 6993, 34 FR 831, Jan. 18, 1969]

§ 1.1403–1 Cross references.

For provisions relating to the requirement for filing returns with respect to net earnings from self-employment, see § 1.6017–1. For provisions relating to declarations of estimated tax on self-employment income, see §§ 1.6015(a) to 1.6015(j)–1, inclusive. For other administrative provisions relating to the tax on self-employment income, see the applicable sections of the regulations in this part (§ 1.6001–1 *et seq.*) and the applicable sections of the regulations in part 301 of this chapter (Regulations on Procedure and Administration).

[T.D. 7427, 41 FR 34026, Aug. 12, 1976]

WITHHOLDING OF TAX ON NONRESIDENT ALIENS AND FOREIGN CORPORATIONS AND TAX-FREE COVENANT BONDS

NONRESIDENT ALIENS AND FOREIGN CORPORATIONS

§ 1.1441–0 Outline of regulation provisions for section 1441.

This section lists captions contained in §§ 1.1441–1 through 1.1441–9.

§ 1.1441–1 Requirement for the deduction and withholding of tax on payments to foreign persons.

(a) Purpose and scope.
(b) General rules of withholding.
(1) Requirement to withhold on payments to foreign persons.
(2) Determination of payee and payee's status.
(i) In general.
(ii) Payments to a U.S. agent of a foreign person.
(iii) Payments to wholly-owned entities.
(A) Foreign-owned domestic entity.
(B) Foreign entity.
(iv) Payments to a U.S. branch of certain foreign banks or foreign insurance companies.
(A) U.S. branch treated as a U.S. person in certain cases.
(B) Consequences to the withholding agent.
(C) Consequences to the U.S. branch.
(D) Definition of payment to a U.S. branch.
(E) Payments to other U.S. branches.
(v) Payments to a foreign intermediary.
(A) Payments treated as made to persons for whom the intermediary collects the payment.
(B) Payments treated as made to foreign intermediary.
(vi) Other payees.
(vii) Rules for reliably associating a payment with a withholding certificate or other appropriate documentation.
(A) Generally.
(B) Special rules applicable to a withholding certificate from a nonqualified intermediary or flow-through entity.
(C) Special rules applicable to a withholding certificate provided by a qualified intermediary that does not assume primary withholding responsibility.
(D) Special rules applicable to a withholding certificate provided by a qualified intermediary that assumes primary withholding responsibility under chapter 3 of the Internal Revenue Code.
(E) Special rules applicable to a withholding certificate provided by a qualified intermediary that assumes primary Form 1099 reporting and backup withholding responsibility but not primary withholding under chapter 3.
(F) Special rules applicable to a withholding certificate provided by a qualified intermediary that assumes primary withholding responsibility under chapter 3 and primary Form 1099 reporting and backup withholding responsibility and a withholding certificate provided by a withholding foreign partnership.
(3) Presumptions regarding payee's status in the absence of documentation.
(i) General rules.
(ii) Presumptions of classification as individual, corporation, partnership, etc.
(A) In general.
(B) No documentation provided.
(C) Documentary evidence furnished for offshore account.
(iii) Presumption of U.S. or foreign status.
(A) Payments to exempt recipients.

(B) Scholarships and grants.
(C) Pensions, annuities, etc.
(D) Certain payments to offshore accounts.
(iv) Grace period.
(v) Special rules applicable to payments to foreign intermediaries.
(A) Reliance on claim of status as foreign intermediary.
(B) Beneficial owner documentation or allocation information is lacking or unreliable.
(C) Information regarding allocation of payment is lacking or unreliable.
(D) Certification that the foreign intermediary has furnished documentation for all of the persons to whom the intermediary certificate relates is lacking or unreliable.
(vi) U.S. branches.
(vii) Joint payees.
(A) In general.
(B) Special rule for offshore accounts.
(viii) Rebuttal of presumptions.
(ix) Effect of reliance on presumptions and of actual knowledge or reason to know otherwise.
(A) General rule.
(B) Actual knowledge or reason to know that amount of withholding is greater than is required under the presumptions or that reporting of the payment is required.
(x) Examples.
(4) List of exemptions from, or reduced rates of, withholding under chapter 3 of the Code.
(5) Establishing foreign status under applicable provisions of chapter 61 of the Code.
(6) Rules of withholding for payments by a foreign intermediary or certain U.S. branches.
(i) In general.
(ii) Example.
(7) Liability for failure to obtain documentation timely or to act in accordance with applicable presumptions.
(i) General rule.
(ii) Proof that tax liability has been satisfied.
(iii) Liability for interest and penalties.
(iv) Special effective date.
(v) Examples.
(8) Adjustments, refunds, or credits of overwithheld amounts.
(9) Payments to joint owners.
(c) Definitions.
(1) Withholding.
(2) Foreign and U.S. person.
(3) Individual.
(i) Alien individual.
(ii) Nonresident alien individual.
(4) Certain foreign corporations.
(5) Financial institution and foreign financial institution.
(6) Beneficial owner.
(i) General rule.
(ii) Special rules.
(A) General rule.
(B) Foreign partnerships.
(C) Foreign simple trusts and foreign grantor trusts.
(D) Other foreign trusts and foreign estates.
(7) Withholding agent.
(8) Person.
(9) Source of income.
(10) Chapter 3 of the Code.
(11) Reduced rate.
(12) Payee.
(13) Intermediary.
(14) Nonqualified intermediary.
(15) Qualified intermediary.
(16) Withholding certificate.
(17) Documentary evidence; other appropriate documentation.
(18) Documentation.
(19) Payor.
(20) Exempt recipient.
(21) Non-exempt recipient.
(22) Reportable amounts.
(23) Flow-through entity.
(24) Foreign simple trust.
(25) Foreign complex trust.
(26) Foreign grantor trust.
(27) Partnership.
(28) Nonwithholding foreign partnership.
(29) Withholding foreign partnership.
(d) Beneficial owner's or payee's claim of U.S. status.
(1) In general.
(2) Payments for which a Form W–9 is otherwise required.
(3) Payments for which a Form W–9 is not otherwise required.
(4) When a payment to an intermediary or flow-through entity may be treated as made to a U.S. payee.
(e) Beneficial owner's claim of foreign status.
(1) Withholding agent's reliance.
(i) In general.
(ii) Payments that a withholding agent may treat as made to a foreign person that is a beneficial owner.
(A) General rule.
(B) Additional requirements.
(2) Beneficial owner withholding certificate.
(i) In general.
(ii) Requirements for validity of certificate.
(3) Intermediary, flow-through, or U.S. branch withholding certificate.
(i) In general.
(ii) Intermediary withholding certificate from a qualified intermediary.
(iii) Intermediary withholding certificate from a nonqualified intermediary.
(iv) Withholding statement provided by nonqualified Intermediary.
(A) In general.
(B) General requirements.
(C) Content of withholding statement.
(D) Alternative procedures.
(E) Notice procedures.

(v) Withholding certificate from certain U.S. branches.
(vi) Reportable amounts.
(4) Applicable rules.
(i) Who may sign the certificate.
(ii) Period of validity.
(A) Three-year period.
(B) Indefinite validity period.
(C) Withholding certificate for effectively connected income.
(D) Change in circumstances.
(iii) Retention of withholding certificate.
(iv) Electronic transmission of information.
(A) In general.
(B) Requirements.
(C) Special requirements for transmission of Forms W–8 by an intermediary. [Reserved]
(v) Electronic confirmation of taxpayer identifying number on withholding certificate.
(vi) Acceptable substitute form.
(vii) Requirement of taxpayer identifying number.
(viii) Reliance rules.
(A) Classification.
(B) Status of payee as an intermediary or as a person acting for its own account.
(ix) Certificates to be furnished for each account unless exception applies.
(A) Coordinated account information system in effect.
(B) Family of mutual funds.
(C) Special rule for brokers.
(5) Qualified intermediaries.
(i) General rule.
(ii) Definition of qualified intermediary.
(iii) Withholding agreement.
(A) In general.
(B) Terms of the withholding agreement.
(iv) Assignment of primary withholding responsibility.
(v) Withholding statement.
(A) General rule.
(B) Content of withholding statement.
(C) Withholding rate pools.
(f) Effective date.
(1) In general.
(2) Transition rules.
(i) Special rules for existing documentation.
(ii) Lack of documentation for past years.

§ 1.1441–2 Amounts subject to withholding.

(a) In general.
(b) Fixed or determinable annual or periodical income.
(1) In general.
(i) Definition.
(ii) Manner of payment.
(iii) Determinability of amount.
(2) Exceptions.
(3) Original issue discount.
(i) Amount subject to tax.
(ii) Amounts subject to withholding.
(4) Securities lending transactions and equivalent transactions.
(c) Other income subject to withholding.
(d) Exceptions to withholding where no money or property is paid or lack of knowledge.
(1) General rule.
(2) Cancellation of debt.
(3) Satisfaction of liability following underwithholding by withholding agent.
(e) Payment.
(1) General rule.
(2) Income allocated under section 482.
(3) Blocked income.
(4) Special rules for dividends.
(5) Certain interest accrued by a foreign corporation.
(6) Payments other than in U.S. dollars.
(f) Effective date.

§ 1.1441–3 Determination of amounts to be withheld.

(a) Withholding on gross amount.
(b) Withholding on payments on certain obligations.
(1) Withholding at time of payment of interest.
(2) No withholding between interest payment dates.
(i) In general.
(ii) Anti-abuse rule.
(c) Corporate distributions.
(1) General rule.
(2) Exception to withholding on distributions.
(i) In general.
(ii) Reasonable estimate of accumulated and current earnings and profits on the date of payment.
(A) General rule.
(B) Procedures in case of underwithholding.
(C) Reliance by intermediary on reasonable estimate.
(D) Example.
(3) Special rules in the case of distributions from a regulated investment company.
(i) General rule
(ii) Reliance by intermediary on reasonable estimate.
(4) Coordination with withholding under section 1445.
(i) In general.
(A) Withholding under section 1441.
(B) Withholding under both sections 1441 and 1445.
(C) Coordination with REIT withholding.
(ii) Intermediary reliance rule.
(d) Withholding on payments that include an undetermined amount of income.
(1) In general.
(2) Withholding on certain gains.
(e) Payments other than in U.S. dollars.
(1) In general.
(2) Payments in foreign currency.
(f) Tax liability of beneficial owner satisfied by withholding agent.
(1) General rule.
(2) Example.

(g) Conduit financing arrangements
(h) Effective date.

§ 1.1441–4 Exemptions from withholding for certain effectively connected income and other amounts.

(a) Certain income connected with a U.S. trade or business.
(1) In general.
(2) Withholding agent's reliance on a claim of effectively connected income.
(i) In general.
(ii) Special rules for U.S. branches of foreign persons.
(A) U.S. branches of certain foreign banks or foreign insurance companies.
(B) Other U.S. branches.
(3) Income on notional principal contracts.
(i) General rule.
(ii) Exception for certain payments.
(b) Compensation for personal services of an individual.
(1) Exemption from withholding.
(2) Manner of obtaining withholding exemption under tax treaty.
(i) In general.
(ii) Withholding certificate claiming withholding exemption.
(iii) Review by withholding agent.
(iv) Acceptance by withholding agent.
(v) Copies of Form 8233.
(3) Withholding agreements.
(4) Final payments exemption.
(i) General rule.
(ii) Final payment of compensation for personal services.
(iii) Manner of applying for final payment exemption.
(iv) Letter to withholding agent.
(5) Requirement of return.
(6) Personal exemption.
(i) In general.
(ii) Multiple exemptions.
(iii) Special rule where both certain scholarship and compensation income are received.
(c) Special rules for scholarship and fellowship income.
(1) In general.
(2) Alternate withholding election.
(d) Annuities received under qualified plans.
(e) Per diem of certain alien trainees.
(f) Failure to receive withholding certificates timely or to act in accordance with applicable presumptions.
(g) Effective date.
(1) General rule.
(2) Transition rules.

§ 1.1441–5 Withholding on payments to partnerships, trusts, and estates.

(a) In general.
(b) Rules applicable to U.S. partnerships, trusts, and estates.
(1) Payments to U.S. partnerships, trusts, and estates.
(2) Withholding by U.S. payees.
(i) U.S. partnerships.
(A) In general.
(B) Effectively connected income of partners.
(ii) U.S. simple trusts.
(iii) U.S. complex trusts and U.S. estates.
(iv) U.S. grantor trusts.
(v) Subsequent distribution.
(c) Foreign partnerships.
(1) Determination of payee.
(i) Payments treated as made to partners.
(ii) Payments treated as made to the partnership.
(iii) Rules for reliably associating a payment with documentation.
(iv) Examples.
(2) Withholding foreign partnerships.
(i) Reliance on claim of withholding foreign partnership status.
(ii) Withholding agreement.
(iii) Withholding responsibility.
(iv) Withholding certificate from a withholding foreign partnership.
(3) Nonwithholding foreign partnerships.
(i) Reliance on claim of foreign partnership status.
(ii) Reliance on claim of reduced withholding by a partnership for its partners.
(iii) Withholding certificate from a nonwithholding foreign partnership.
(iv) Withholding statement provided by nonwithholding foreign partnership.
(v) Withholding and reporting by a foreign partnership.
(d) Presumption rules.
(1) In general.
(2) Determination of partnership's status as domestic or foreign in the absence of documentation.
(3) Determination of partners' status in the absence of certain documentation.
(4) Determination by a withholding foreign partnership of the status of its partners.
(e) Foreign trusts and estates.
(1) In general.
(2) Payments to foreign complex trusts and estates.
(3) Payees of payments to foreign simple trusts and foreign grantor trusts.
(i) Payments for which beneficiaries and owners are payees.
(ii) Payments for which trust is payee.
(4) Reliance on claim of foreign complex trust or foreign estate status.
(5) Foreign simple trust and foreign grantor trust.
(i) Reliance on claim of foreign simple trust or foreign grantor trust status.
(ii) Reliance on claim of reduced withholding by a foreign simple trust or foreign grantor trust for its beneficiaries or owners.
(iii) Withholding certificate from foreign simple trust or foreign grantor trust.
(iv) Withholding statement provided by a foreign simple trust or foreign grantor trust.
(v) Withholding foreign trusts.

(6) Presumption rules.
(i) In general.
(ii) Determination of status as U.S. or foreign trust or estate in the absence of documentation.
(iii) Determination of beneficiary or owner's status in the absence of certain documentation.
(f) Failure to receive withholding certificate timely or to act in accordance with applicable presumptions.
(g) Effective date.
(1) General rule.
(2) Transition rules.

§ 1.1441–6 Claim of reduced withholding under an income tax treaty.

(a) In general.
(b) Reliance on claim of reduced withholding under an income tax treaty.
(1) In general.
(2) Payment to fiscally transparent entity.
(i) In general.
(ii) Certification by qualified intermediary.
(iii) Dual treatment.
(iv) Examples.
(3) Certified TIN.
(4) Claim of benefits under an income tax treaty by a U.S. person.
(c) Exemption from requirement to furnish a taxpayer identifying number and special documentary evidence rules for certain income.
(1) In general.
(2) Income to which special rules apply.
(3) Certificate of residence.
(4) Documentary evidence establishing residence in the treaty country.
(i) Individuals.
(ii) Persons other than individuals.
(5) Statements regarding entitlement to treaty benefits.
(i) Statement regarding conditions under a limitation on benefits provision.
(ii) Statement regarding whether the taxpayer derives the income.
(d) Joint owners.
(e) Competent authority.
(f) Failure to receive withholding certificate timely.
(g) Special taxpayer identifying number rule for certain foreign individuals claiming treaty benefits.
(1) General rule.
(2) Special rule.
(3) Requirement that an ITIN be requested during the first business day following payment.
(4) Definition of unexpected payment.
(5) Examples.
(h) Effective dates.
(1) General rule.
(2) Transition rules.

§ 1.1441–7 General provisions relating to withholding agents.

(a) Withholding agent defined.
(1) In general.
(2) Examples.
(b) Standards of knowledge.
(1) In general.
(2) Reason to know.
(3) Financial institutions—limits on reason to know.
(4) Rules applicable to withholding certificates.
(i) In general.
(ii) Examples.
(5) Withholding certificate—establishment of foreign status.
(6) Withholding certificate—claim of reduced rate of withholding under treaty.
(7) Documentary evidence.
(8) Documentary evidence—establishment of foreign status.
(9) Documentary evidence—claim of reduced rate of withholding under treaty.
(10) Limits on reason to know—indirect account holders.
(11) Additional guidance.
(c) Authorized agent.
(1) In general.
(2) Authorized foreign agent.
(3) Notification.
(4) Liability of U.S. withholding agent.
(5) Filing of returns.
(d) United States obligations.
(e) Assumed obligations.
(f) Conduit financing arrangements.
(g) Effective date.

§ 1.1441–8 Exemption from withholding for payments to foreign governments, international organizations, foreign central banks of issue, and the Bank for International Settlements.

(a) Foreign governments.
(b) Reliance on claim of exemption by foreign government.
(c) Income of a foreign central bank of issue or the Bank for International Settlements.
(1) Certain interest income.
(2) Bankers' acceptances.
(d) Exemption for payments to international organizations.
(e) Failure to receive withholding certificate timely and other applicable procedures.
(f) Effective date.
(1) In general.
(2) Transition rules.

§ 1.1441–9 Exemption from withholding on exempt income of a foreign tax-exempt organization, including foreign private foundations.

(a) Exemption from withholding for exempt income.
(b) Reliance on foreign organization's claim of exemption from withholding.
(1) General rule.
(2) Withholding certificate.
(3) Presumptions in the absence of documentation.
(4) Reason to know.

(c) Failure to receive withholding certificate timely and other applicable procedures.
(d) Effective date.
(1) In general.
(2) Transition rules.

[T.D. 8734, 62 FR 53421, Oct. 14, 1997, as amended by T.D. 8881, 66 FR 32168, May 22, 2000; T.D. 9023, 67 FR 70312, Nov. 22, 2002]

§ 1.1441–1 Requirement for the deduction and withholding of tax on payments to foreign persons.

(a) *Purpose and scope.* This section, §§ 1.1441–2 through 1.1441–9, and 1.1443–1 provide rules for withholding under sections 1441, 1442, and 1443 when a payment is made to a foreign person. This section provides definitions of terms used in chapter 3 of the Internal Revenue Code (Code) and regulations thereunder. It prescribes procedures to determine whether an amount must be withheld under chapter 3 of the Code and documentation that a withholding agent may rely upon to determine the status of a payee or a beneficial owner as a U.S. person or as a foreign person and other relevant characteristics of the payee that may affect a withholding agent's obligation to withhold under chapter 3 of the Code and the regulations thereunder. Special procedures regarding payments to foreign persons that act as intermediaries are also provided. Section 1.1441–2 defines the income subject to withholding under section 1441, 1442, and 1443 and the regulations under these sections. Section 1.1441–3 provides rules regarding the amount subject to withholding. Section 1.1441–4 provides exemptions from withholding for, among other things, certain income effectively connected with the conduct of a trade or business in the United States, including certain compensation for the personal services of an individual. Section 1.1441–5 provides rules for withholding on payments made to flow-through entities and other similar arrangements. Section 1.1441–6 provides rules for claiming a reduced rate of withholding under an income tax treaty. Section 1.1441–7 defines the term *withholding agent* and provides due diligence rules governing a withholding agent's obligation to withhold. Section 1.1441–8 provides rules for relying on claims of exemption from withholding for payments to a foreign government, an international organization, a foreign central bank of issue, or the Bank for International Settlements. Sections 1.1441–9 and 1.1443–1 provide rules for relying on claims of exemption from withholding for payments to foreign tax exempt organizations and foreign private foundations.

(b) *General rules of withholding*—(1) *Requirement to withhold on payments to foreign persons.* A withholding agent must withhold 30-percent of any payment of an amount subject to withholding made to a payee that is a foreign person unless it can reliably associate the payment with documentation upon which it can rely to treat the payment as made to a payee that is a U.S. person or as made to a beneficial owner that is a foreign person entitled to a reduced rate of withholding. However, a withholding agent making a payment to a foreign person need not withhold where the foreign person assumes responsibility for withholding on the payment under chapter 3 of the Code and the regulations thereunder as a qualified intermediary (see paragraph (e)(5) of this section), as a U.S. branch of a foreign person (see paragraph (b)(2)(iv) of this section), as a withholding foreign partnership (see § 1.1441–5(c)(2)(i)), or as an authorized foreign agent (see § 1.1441–7(c)(1)). This section (dealing with general rules of withholding and claims of foreign or U.S. status by a payee or a beneficial owner), and §§ 1.1441–4, 1.1441–5, 1.1441–6, 1.1441–8, 1.1441–9, and 1.1443–1 provide rules for determining whether documentation is required as a condition for reducing the rate of withholding on a payment to a foreign beneficial owner or to a U.S. payee and if so, the nature of the documentation upon which a withholding agent may rely in order to reduce such rate. Paragraph (b)(2) of this section prescribes the rules for determining who the payee is, the extent to which a payment is treated as made to a foreign payee, and reliable association of a payment with documentation. Paragraph (b)(3) of this section describes the applicable presumptions for determining the payee's status as U.S. or foreign and the payee's other characteristics (i.e., as an owner or intermediary, as an individual, partnership, corporation, etc.).

Paragraph (b)(4) of this section lists the types of payments for which the 30-percent withholding rate may be reduced. Because the treatment of a payee as a U.S. or a foreign person also has consequences for purposes of making an information return under the provisions of chapter 61 of the Code and for withholding under other provisions of the Code, such as sections 3402, 3405 or 3406, paragraph (b)(5) of this section lists applicable provisions outside chapter 3 of the Code that require certain payees to establish their foreign status (e.g., in order to be exempt from information reporting). Paragraph (b)(6) of this section describes the withholding obligations of a foreign person making a payment that it has received in its capacity as an intermediary. Paragraph (b)(7) of this section describes the liability of a withholding agent that fails to withhold at the required 30-percent rate in the absence of documentation. Paragraph (b)(8) of this section deals with adjustments and refunds in the case of overwithholding. Paragraph (b)(9) of this section deals with determining the status of the payee when the payment is jointly owned. See paragraph (c)(6) of this section for a definition of beneficial owner. See §1.1441–7(a) for a definition of withholding agent. See §1.1441–2(a) for the determination of an amount subject to withholding. See §1.1441–2(e) for the definition of a payment and when it is considered made. Except as otherwise provided, the provisions of this section apply only for purposes of determining a withholding agent's obligation to withhold under chapter 3 of the Code and the regulations thereunder.

(2) *Determination of payee and payee's status*—(i) *In general.* Except as otherwise provided in this paragraph (b)(2) and §1.1441–5(c)(1) and (e)(3), a payee is the person to whom a payment is made, regardless of whether such person is the beneficial owner of the amount (as defined in paragraph (c)(6) of this section). A foreign payee is a payee who is a foreign person. A U.S. payee is a payee who is a U.S. person. Generally, the determination by a withholding agent of the U.S. or foreign status of a payee and of its other relevant characteristics (e.g., as a beneficial owner or intermediary, or as an individual, corporation, or flow-through entity) is made on the basis of a withholding certificate that is a Form W–8 or a Form 8233 (indicating foreign status of the payee or beneficial owner) or a Form W–9 (indicating U.S. status of the payee). The provisions of this paragraph (b)(2), paragraph (b)(3) of this section, and §1.1441–5 (c), (d), and (e) dealing with determinations of payee and applicable presumptions in the absence of documentation, apply only to payments of amounts subject to withholding under chapter 3 of the Code (within the meaning of §1.1441–2(a)). Similar payee and presumption provisions are set forth under §1.6049–5(d) for payments of amounts that are not subject to withholding under chapter 3 of the Code (or the regulations thereunder) but that may be reportable under provisions of chapter 61 of the Code (and the regulations thereunder). See paragraph (d) of this section for documentation upon which the withholding agent may rely in order to treat the payee or beneficial owner as a U.S. person. See paragraph (e) of this section for documentation upon which the withholding agent may rely in order to treat the payee or beneficial owner as a foreign person. For applicable presumptions of status in the absence of documentation, see paragraph (b)(3) of this section and §1.1441–5(d). For definitions of a foreign person and U.S. person, see paragraph (c)(2) of this section.

(ii) *Payments to a U.S. agent of a foreign person.* A withholding agent making a payment to a U.S. person (other than to a U.S. branch that is treated as a U.S. person pursuant to paragraph (b)(2)(iv) of this section) and who has actual knowledge that the U.S. person receives the payment as an agent of a foreign person must treat the payment as made to the foreign person. However, the withholding agent may treat the payment as made to the U.S. person if the U.S. person is a financial institution and the withholding agent has no reason to believe that the financial institution will not comply with its obligation to withhold. See paragraph (c)(5) of this section for the definition of a financial institution.

(iii) *Payments to wholly-owned entities*—(A) *Foreign-owned domestic entity.* A payment to a wholly-owned domestic entity that is disregarded for federal tax purposes under § 301.7701–2(c)(2) of this chapter as an entity separate from its owner and whose single owner is a foreign person shall be treated as a payment to the owner of the entity, subject to the provisions of paragraph (b)(2)(iv) of this section. For purposes of this paragraph (b)(2)(iii)(A), a domestic entity means a person that would be treated as a U.S. person if it had an election in effect under § 301.7701–3(c)(1)(i) of this chapter to be treated as a corporation. For example, a limited liability company, A, organized under the laws of the State of Delaware, opens an account at a U.S. bank. Upon opening of the account, the bank requests A to furnish a Form W–9 as required under section 6049(a) and the regulations under that section. A does not have an election in effect under § 301.7701–3(c)(1)(i) of this chapter and, therefore, is not treated as an organization taxable as a corporation, including for purposes of the exempt recipient provisions in § 1.6049–4(c)(1). If A has a single owner and the owner is a foreign person (as defined in paragraph (c)(2) of this section), then A may not furnish a Form W–9 because it may not represent that it is a U.S. person for purposes of the provisions of chapters 3 and 61 of the Code, and section 3406. Therefore, A must furnish a Form W–8 with the name, address, and taxpayer identifying number (TIN) (if required) of the foreign person who is the single owner in the same manner as if the account were opened directly by the foreign single owner. See §§ 1.894–1T(d) and 1.1441–6(b)(2) for special rules where the entity's owner is claiming a reduced rate of withholding under an income tax treaty.

(B) *Foreign entity.* A payment to a wholly-owned foreign entity that is disregarded under § 301.7701–2(c)(2) of this chapter as an entity separate from its owner shall be treated as a payment to the single owner of the entity, subject to the provisions of paragraph (b)(2)(iv) of this section if the foreign entity has a U.S. branch in the United States. For purposes of this paragraph (b)(2)(iii)(B), a foreign entity means a person that would be treated as a foreign person if it had an election in effect under § 301.7701–3(c)(1)(i) of this chapter to be treated as a corporation. See §§ 1.894–1T(d) and 1.1441–6(b)(2) for special rules where the foreign entity or its owner is claiming a reduced rate of withholding under an income tax treaty. Thus, for example, if the foreign entity's single owner is a U.S. person, the payment shall be treated as a payment to a U.S. person. Therefore, based on the saving clause in U.S. income tax treaties, such an entity may not claim benefits under an income tax treaty even if the entity is organized in a country with which the United States has an income tax treaty in effect and treats the entity as a non-fiscally transparent entity. See § 1.894–1T(d)(6), *Example 10.* Unless it has actual knowledge or reason to know that the foreign entity to whom the payment is made is disregarded under § 301.7701–2(c)(2) of this chapter, a withholding agent may treat a foreign entity as an entity separate from its owner unless it can reliably associate the payment with a withholding certificate from the entity's owner.

(iv) *Payments to a U.S. branch of certain foreign banks or foreign insurance companies*—(A) *U.S. branch treated as a U.S. person in certain cases.* A payment to a U.S. branch of a foreign person is a payment to a foreign person. However, a U.S. branch described in this paragraph (b)(2)(iv)(A) and a withholding agent (including another U.S. branch described in this paragraph (b)(2)(iv)(A)) may agree to treat the branch as a U.S. person for purposes of withholding on specified payments to the U.S. branch. Notwithstanding the preceding sentence, a withholding agent making a payment to a U.S. branch treated as a U.S. person under this paragraph (b)(2)(iv)(A) shall not treat the branch as a U.S. person for purposes of reporting the payment made to the branch. Therefore, a payment to such U.S. branch shall be reported on Form 1042–S under § 1.1461–1(c). Further, a U.S. branch that is treated as a U.S. person under this paragraph (b)(2)(iv)(A) shall not be treated as a U.S. person for purposes of the withholding certificate it may provide to a withholding agent. Therefore,

the U.S. branch must furnish a U.S. branch withholding certificate on Form W–8 as provided in paragraph (e)(3)(v) of this section and not a Form W–9. An agreement to treat a U.S. branch as a U.S. person must be evidenced by a U.S. branch withholding certificate described in paragraph (e)(3)(v) of this section furnished by the U.S. branch to the withholding agent. A U.S. branch described in this paragraph (b)(2)(iv)(A) is any U.S. branch of a foreign bank subject to regulatory supervision by the Federal Reserve Board or a U.S. branch of a foreign insurance company required to file an annual statement on a form approved by the National Association of Insurance Commissioners with the Insurance Department of a State, a Territory, or the District of Columbia. In addition, a financial institution organized in a possession of the United States will be treated as a U.S. branch for purposes of this paragraph (b)(2)(iv)(A). The Internal Revenue Service (IRS) may approve a list of U.S. branches that may qualify for treatment as a U.S. person under this paragraph (b)(2)(iv)(A) (see § 601.601(d)(2) of this chapter). See § 1.6049–5(c)(5)(vi) for the treatment of U.S. branches as U.S. payors if they make a payment that is subject to reporting under chapter 61 of the Internal Revenue Code. Also see § 1.6049–5(d)(1)(ii) for the treatment of U.S. branches as foreign payees under chapter 61 of the Internal Revenue Code.

(B) *Consequences to the withholding agent.* Any person that is otherwise a withholding agent regarding a payment to a U.S. branch described in paragraph (b)(2)(iv)(A) of this section shall treat the payment in one of the following ways—

(*1*) As a payment to a U.S. person, in which case the withholding agent is not responsible for withholding on such payment to the extent it can reliably associate the payment with a withholding certificate described in paragraph (e)(3)(v) of this section that has been furnished by the U.S. branch under its agreement with the withholding agent to be treated as a U.S. person;

(*2*) As a payment directly to the persons whose names are on withholding certificates or other appropriate documentation forwarded by the U.S. branch to the withholding agent when no agreement is in effect to treat the U.S. branch as a U.S. person for such payment, to the extent the withholding agent can reliably associate the payment with such certificates or documentation; or

(*3*) As a payment to a foreign person of income that is effectively connected with the conduct of a trade or business in the United States if the withholding agent cannot reliably associate the payment with a withholding certificate from the U.S. branch or any other certificate or other appropriate documentation from another person. See § 1.1441–4(a)(2)(ii).

(C) *Consequences to the U.S. branch.* A U.S. branch that is treated as a U.S. person under paragraph (b)(2)(iv)(A) of this section shall be treated as a separate person solely for purposes of section 1441(a) and all other provisions of chapter 3 of the Internal Revenue Code and the regulations thereunder (other than for purposes of reporting the payment to the U.S. branch under § 1.1461–1(c) or for purposes of the documentation such a branch must furnish under paragraph (e)(3)(v) of this section) for any payment that it receives as such. Thus, the U.S. branch shall be responsible for withholding on the payment in accordance with the provisions under chapter 3 of the Internal Revenue Code and the regulations thereunder and other applicable withholding provisions of the Internal Revenue Code. For this purpose, it shall obtain and retain documentation from payees or beneficial owners of the payments that it receives as a U.S. person in the same manner as if it were a separate entity. For example, if a U.S. branch receives a payment on behalf of its home office and the home office is a qualified intermediary, the U.S. branch must obtain a qualified intermediary withholding certificate described in paragraph (e)(3)(ii) of this section from its home office. In addition, a U.S. branch that has not provided documentation to the withholding agent for

a payment that is, in fact, not effectively connected income is a withholding agent with respect to that payment. See paragraph (b)(6) of this section and § 1.1441–4(a)(2)(ii).

(D) *Definition of payment to a U.S. branch.* A payment is treated as a payment to a U.S. branch of a foreign bank or foreign insurance company if the payment is credited to an account maintained in the United States in the name of a U.S. branch of the foreign person, or the payment is made to an address in the United States where the U.S. branch is located and the name of the U.S. branch appears on documents (in written or electronic form) associated with the payment (e.g., the check mailed or a letter addressed to the branch).

(E) *Payments to other U.S. branches.* Similar withholding procedures may apply to payments to U.S. branches that are not described in paragraph (b)(2)(iv)(A) of this section to the extent permitted by the district director or the Assistant Commissioner (International). Any such branch must establish that its situation is analogous to that of a U.S. branch described in paragraph (b)(2)(iv)(A) of this section regarding its registration with, and regulation by, a U.S. governmental institution, the type and amounts of assets it is required to, or actually maintains in the United States, and the personnel who carry out the activities of the branch in the United States. In the alternative, the branch must establish that the withholding and reporting requirements under chapter 3 of the Code and the regulations thereunder impose an undue administrative burden and that the collection of the tax imposed by section 871(a) or 881(a) on the foreign person (or its members in the case of a foreign partnership) will not be jeopardized by the exemption from withholding. Generally, an undue administrative burden will be found to exist in a case where the person entitled to the income, such as a foreign insurance company, receives from the withholding agent income on securities issued by a single corporation, some of which is, and some of which is not, effectively connected with conduct of a trade or business within the United States and the criteria for determining the effective connection are unduly difficult to apply because of the circumstances under which such securities are held. No exemption from withholding shall be granted under this paragraph (b)(2)(iv)(E) unless the person entitled to the income complies with such other requirements as may be imposed by the district director or the Assistant Commissioner (International) and unless the district director or the Assistant Commissioner (International) is satisfied that the collection of the tax on the income involved will not be jeopardized by the exemption from withholding. The IRS may prescribe such procedures as are necessary to make these determinations (see § 601.601(d)(2) of this chapter).

(v) *Payments to a foreign intermediary*—(A) *Payments treated as made to persons for whom the intermediary collects the payment.* Except as otherwise provided in paragraph (b)(2)(v)(B) of this section, the payee of a payment to a person that the withholding agent may treat as a foreign intermediary in accordance with the provisions of paragraph (b)(3)(ii)(C) or (b)(3)(v)(A) of this section is the person or persons for whom the intermediary collects the payment. Thus, for example, the payee of a payment that the withholding agent can reliably associate with a withholding certificate from a qualified intermediary (defined in paragraph (e)(5)(ii) of this section) that does not assume primary withholding responsibility or a payment to a nonqualified intermediary are the persons for whom the qualified intermediary or nonqualified intermediary acts and not to the intermediary itself. See paragraph (b)(3)(v) of this section for presumptions that apply if the payment cannot be reliably associated with valid documentation. For similar rules for payments to flow-through entities, see § 1.1441–5(c)(1) and (e)(3).

(B) *Payments treated as made to foreign intermediary.* The payee of a payment to a person that the withholding agent may treat as a qualified intermediary is the qualified intermediary to the extent that the qualified intermediary assumes primary withholding responsibility under paragraph (e)(5)(iv) of this section for the payment. For example

if a qualified intermediary assumes primary withholding responsibility under chapter 3 of the Internal Revenue Code but does not assume primary reporting or withholding responsibility under chapter 61 or section 3406 of the Internal Revenue Code and therefore provides Forms W–9 for U.S. non-exempt recipients, the qualified intermediary is the payee except to the extent the payment is reliably associated with a Form W–9 from a U.S. non-exempt recipient.

(vi) *Other payees.* A payment to a person described in § 1.6049–4(c)(1)(ii) that the withholding agent would treat as a payment to a foreign person without obtaining documentation for purposes of information reporting under section 6049 (if the payment were interest) is treated as a payment to a foreign payee for purposes of chapter 3 of the Code and the regulations thereunder (or to a foreign beneficial owner to the extent provided in paragraph (e)(1)(ii)(A) (*6*) or (*7*) of this section). Further, payments that the withholding agent can reliably associate with documentary evidence described in § 1.6049–5(c)(1) relating to the payee is treated as a payment to a foreign payee. A payment that the withholding agent may treat as a payment to an authorized foreign agent (as defined in § 1.1441–7(c)(2)) is treated as a payment to the agent and not to the persons for whom the agent collects the payment. See § 1.1441–5 (b)(1) and (c)(1) for payee determinations for payments to partnerships. See § 1.1441–5(e) for payee determinations for payments to foreign trusts or foreign estates.

(vii) *Rules for reliably associating a payment with a withholding certificate or other appropriate documentation*—(A) *Generally.* The presumption rules of paragraph (b)(3) of this section and §§ 1.1441–5(d) and (e)(6) and 1.6049–5(d) apply to any payment, or portion of a payment, that a withholding agent cannot reliably associate with valid documentation. Generally, a withholding agent can reliably associate a payment with valid documentation if, prior to the payment, it holds valid documentation (either directly or through an agent), it can reliably determine how much of the payment relates to the valid documentation, and it has no actual knowledge or reason to know that any of the information, certifications, or statements in, or associated with, the documentation are incorrect. Special rules apply for payments made to intermediaries, flow-through entities, and certain U.S. branches. See paragraph (b)(2)(vii)(B) through (F) of this section. The documentation referred to in this paragraph (b)(2)(vii) is documentation described in paragraphs (c)(16) and (17) of this section upon which a withholding agent may rely to treat the payment as a payment made to a payee or beneficial owner, and to ascertain the characteristics of the payee or beneficial owner that are relevant to withholding or reporting under chapter 3 of the Internal Revenue Code and the regulations thereunder. For purposes of this paragraph (b)(2)(vii), documentation also includes the agreement that the withholding agent has in effect with an authorized foreign agent in accordance with § 1.1441–7(c)(2)(i). A withholding agent that is not required to obtain documentation with respect to a payment is considered to lack documentation for purposes of this paragraph (b)(2)(vii). For example, a withholding agent paying U.S. source interest to a person that is an exempt recipient, as defined in § 1.6049–4(c)(1)(ii), is not required to obtain documentation from that person in order to determine whether an amount paid to that person is reportable under an applicable information reporting provision under chapter 61 of the Internal Revenue Code. The withholding agent must, however, treat the payment as made to an undocumented person for purposes of chapter 3 of the Internal Revenue Code. Therefore, the presumption rules of paragraph (b)(3)(iii) of this section apply to determine whether the person is presumed to be a U.S. person (in which case, no withholding is required under this section), or whether the person is presumed to be a foreign person (in which case 30-percent withholding is required under this section). See paragraph (b)(3)(v) of this section for special reliance rules in the case of a payment to a foreign intermediary and § 1.1441–5(d) and (e)(6) for special reliance rules in the case of a payment to a flow-through entity.

(B) *Special rules applicable to a withholding certificate from a nonqualified intermediary or flow-through entity.* (*1*) In the case of a payment made to a nonqualified intermediary, a flow-through entity (as defined in paragraph (c)(23) of this section), and a U.S. branch described in paragraph (b)(2)(iv) of this section (other than a branch that is treated as a U.S. person), a withholding agent can reliably associate the payment with valid documentation only to the extent that, prior to the payment, the withholding agent can allocate the payment to a valid nonqualified intermediary, flow-through, or U.S. branch withholding certificate; the withholding agent can reliably determine how much of the payment relates to valid documentation provided by a payee as determined under paragraph (c)(12) of this section (i.e., a person that is not itself an intermediary, flow-through entity, or U.S. branch); and the withholding agent has sufficient information to report the payment on Form 1042–S or Form 1099, if reporting is required. See paragraph (e)(3)(iii) of this section for the requirements of a nonqualified intermediary withholding certificate, paragraph (e)(3)(v) of this section for the requirements of a U.S. branch certificate, and §§ 1.1441–5(c)(3)(iii) and (e)(5)(iii) for the requirements of a flow-through withholding certificate. Thus, a payment cannot be reliably associated with valid documentation provided by a payee to the extent such documentation is lacking or unreliable, or to the extent that information required to allocate and report all or a portion of the payment to each payee is lacking or unreliable. If a withholding certificate attached to an intermediary, U.S. branch, or flow-through withholding certificate is another intermediary, U.S. branch, or flow-through withholding certificate, the rules of this paragraph (b)(2)(vii)(B) apply by treating the share of the payment allocable to the other intermediary, U.S. branch, or flow-through entity as if the payment were made directly to such other entity. See paragraph (e)(3)(iv)(D) of this section for rules permitting information allocating a payment to documentation to be received after the payment is made.

(*2*) The rules of paragraph (b)(2)(vii)(B)(*1*) of this section are illustrated by the following examples:

Example 1. WH, a withholding agent, makes a payment of U.S. source interest to NQI, an intermediary that is a nonqualified intermediary. NQI provides a valid intermediary withholding certificate under paragraph (e)(3)(iii) of this section. NQI does not, however, provide valid documentation from the persons on whose behalf it receives the interest payment, and, therefore, the interest payment cannot be reliably associated with valid documentation provided by a payee. WH must apply the presumption rules of paragraph (b)(3)(v) of this section to the payment.

Example 2. The facts are the same as in *Example 1,* except that NQI does attach valid beneficial owner withholding certificates (as defined in paragraph (e)(2)(i) of this section) from A, B, C, and D establishing their status as foreign persons. NQI does not, however, provide WH with any information allocating the payment among A, B, C, and D and, therefore, WH cannot determine the portion of the payment that relates to each beneficial owner withholding certificate. The interest payment cannot be reliably associated with valid documentation from a payee and WH must apply the presumption rules of paragraph (b)(3)(v) of this section to the payment. See, however, paragraph (e)(3)(iv)(D) of this section providing special rules permitting allocation information to be received after a payment is made.

Example 3. The facts are the same as in Example 2, except that NQI does provide allocation information associated with its intermediary withholding certificate indicating that 25 percent of the interest payment is allocable to A and 25 percent to B. NQI does not provide any allocation information regarding the remaining 50 percent of the payment. WH may treat 25 percent of the payment as made to A and 25 percent as made to B. The remaining 50 percent of the payment cannot be reliably associated with valid documentation from a payee, however, since NQI did not provide information allocating the payment. Thus, the remaining 50 percent of the payment is subject to the presumption rules of paragraph (b)(3)(v) of this section.

Example 4. WH makes a payment of U.S. source interest to NQI1, an intermediary that is not a qualified intermediary. NQI1 provides WH with a valid nonqualified intermediary withholding certificate as well a valid beneficial owner withholding certificates from A and B and a valid nonqualified intermediary withholding certificate from NQI2. NQI2 has provided valid beneficial owner documentation from C sufficient to establish C's status as a foreign person. Based on information provided by NQI1, WH

can allocate 20 percent of the interest payment to A, and 20 percent to B. Based on information that NQI2 provided NQI1 and that NQI1 provides to WH, WH can allocate 60 percent of the payment to NQI 2, but can only allocate one half of that payment (30 percent) to C. Therefore, WH cannot reliably associate 30 percent of the payment made to NQI2 with valid documentation and must apply the presumption rules of paragraph (b)(3)(v) of this section to that portion of the payment.

(C) *Special rules applicable to a withholding certificate provided by a qualified intermediary that does not assume primary withholding responsibility.* (*1*) If a payment is made to a qualified intermediary that does not assume primary withholding responsibility under chapter 3 of the Internal Revenue Code or primary Form 1099 reporting and backup withholding responsibility under chapter 61 and section 3406 of the Internal Revenue Code for the payment, a withholding agent can reliably associate the payment with valid documentation only to the extent that, prior to the payment, the withholding agent has received a valid qualified intermediary withholding certificate and the withholding agent can reliably determine the portion of the payment that relates to a withholding rate pool, as defined in paragraph (e)(5)(v)(C) of this section. In the case of a withholding rate pool attributable to a U.S. non-exempt recipient, a payment cannot be reliably associated with valid documentation unless, prior to the payment, the qualified intermediary has provided the U.S. person's Form W–9 (or, in the absence of the form, the name, address, and TIN, if available, of the U.S. person) and sufficient information for the withholding agent to report the payment on Form 1099. See paragraph (e)(5)(v)(C)(*2*) of this section for special rules regarding allocation of payments among U.S. non-exempt recipients.

(*2*) The rules of this paragraph (b)(2)(vii)(C) are illustrated by the following examples:

Example 1. WH, a withholding agent, makes a payment of U.S. source dividends to QI. QI provides WH with a valid qualified intermediary withholding certificate on which it indicates that it does not assume primary withholding responsibility under chapter 3 of the Internal Revenue Code or primary Form 1099 reporting and backup withholding responsibility under chapter 61 and section 3406 of the Internal Revenue Code. QI does not provide any information allocating the dividend to withholding rate pools. WH cannot reliably associate the payment with valid payee documentation and therefore must apply the presumption rules of paragraph (b)(3)(v) of this section.

Example 2. WH makes a payment of U.S. source dividends to QI. QI has 5 customers: A, B, C, D, and E. QI has obtained documentation from A and B establishing their entitlement to a 15 percent rate of tax on U.S. source dividends under an income tax treaty. C is a U.S. person that is an exempt recipient as defined in paragraph (c)(20) of this section. D and E are U.S. non-exempt recipients who have provided Forms W–9 to QI. A, B, C, D, and E are each entitled to 20 percent of the dividend payment. QI provides WH with a valid qualified intermediary withholding certificate as described in paragraph (e)(2)(ii) of this section with which it associates the Forms W–9 from D and E. QI associates the following allocation information with its qualified intermediary withholding certificate: 40 percent of the payment is allocable to the 15 percent withholding rate pool, and 20 percent is allocable to each of D and E. QI does not provide any allocation information regarding the remaining 20 percent of the payment. WH cannot reliably associate 20 percent of the payment with valid documentation and, therefore, must apply the presumption rules of paragraph (b)(3)(v) of this section to that portion of the payment. The 20 percent of the payment allocable to the 15 percent withholding rate pool, and the portion of the payments allocable to D and E are payments that can be reliably associated with documentation.

(D) *Special rules applicable to a withholding certificate provided by a qualified intermediary that assumes primary withholding responsibility under chapter 3 of the Internal Revenue Code.* (*1*) In the case of a payment made to a qualified intermediary that assumes primary withholding responsibility under chapter 3 of the Internal Revenue Code with respect to that payment (but does not assume primary Form 1099 reporting and backup withholding responsibility under chapter 61 and section 3406 of the Internal Revenue Code), a withholding agent can reliably associate the payment with valid documentation only to the extent that, prior to the payment, the withholding agent has received a valid qualified intermediary withholding certificate and the withholding

agent can reliably determine the portion of the payment that relates to the withholding rate pool for which the qualified intermediary assumes primary withholding responsibility under chapter 3 of the Internal Revenue Code and the portion of the payment attributable to withholding rate pools for each U.S. non-exempt recipient for whom the qualified intermediary has provided a Form W–9 (or, in absence of the form, the name, address, and TIN, if available, of the U.S. non-exempt recipient). See paragraph (e)(5)(v)(C)(*2*) of this section for alternative allocation procedures for payments made to U.S. persons that are not exempt recipients.

(*2*) *Examples.* The following examples illustrate the rules of paragraph (b)(2)(vii)(D)(*1*) of this section:

Example 1. WH makes a payment of U.S. source interest to QI, a qualified intermediary. QI provides WH with a withholding certificate that indicates that QI will assume primary withholding responsibility under chapter 3 of the Internal Revenue Code with respect to the payment. In addition, QI attaches a Form W–9 from A, a U.S. non-exempt recipient, as defined in paragraph (c)(21) of this section, and provides the name, address, and TIN of B, a U.S. person that is also a non-exempt recipient but who has not provided a Form W–9. QI associates a withholding statement with its qualified intermediary withholding certificate indicating that 10 percent of the payment is attributable to A, and 10 percent to B, and that QI will assume primary withholding responsibility with respect to the remaining 80 percent of the payment. WH can reliably associate the entire payment with valid documentation. Although under the presumption rule of paragraph (b)(3)(v) of this section, an undocumented person receiving U.S. source interest is generally presumed to be a foreign person, WH has actual knowledge that B is a U.S. non-exempt recipient and therefore must report the payment on Form 1099 and backup withhold on the interest payment under section 3406.

Example 2. The facts are the same as in *Example 1,* except that no Forms W–9 or other information have been provided for the 20 percent of the payment that is allocable to A and B. Thus, QI has accepted withholding responsibility for 80 percent of the payment, but has provided no information for the remaining 20 percent. In this case, 20 percent of the payment cannot be reliably associated with valid documentation, and WH must apply the presumption rule of paragraph (b)(3)(v) of this section.

(E) *Special rules applicable to a withholding certificate provided by a qualified intermediary that assumes primary Form 1099 reporting and backup withholding responsibility but not primary withholding under chapter 3.* (*1*) If a payment is made to a qualified intermediary that assumes primary Form 1099 reporting and backup withholding responsibility for the payment (but does not assume primary withholding responsibility under chapter 3 of the Internal Revenue Code), a withholding agent can reliably associate the payment with valid documentation only to the extent that, prior to the payment, the withholding agent has received a valid qualified intermediary withholding certificate and the withholding agent can reliably determine the portion of the payment that relates to a withholding rate pool or pools provided as part of the qualified intermediary's withholding statement and the portion of the payment for which the qualified intermediary assumes primary Form 1099 reporting and backup withholding responsibility.

(*2*) The following example illustrates the rules of paragraph (b)(2)((vii)(D)(*1*) of this section:

Example. WH makes a payment of U.S. source dividends to QI, a qualified intermediary. QI has provided WH with a valid qualified intermediary withholding certificate. QI states on its withholding statement accompanying the certificate that it assumes primary Form 1099 reporting and backup withholding responsibility but does not assume primary withholding responsibility under chapter 3 of the Internal Revenue Code. QI represents that 15 percent of the dividend is subject to a 30 percent rate of withholding, 75 percent of the dividend is subject to a 15 percent rate of withholding, and that QI assumed primary Form 1099 reporting and backup withholding for the remaining 10 percent of the payment. The entire payment can be reliably associated with valid documentation.

(F) *Special rules applicable to a withholding certificate provided by a qualified intermediary that assumes primary withholding responsibility under chapter 3 and primary Form 1099 reporting and backup withholding responsibility and a withholding certificate provided by a withholding foreign partnership.* If a payment is made to a qualified intermediary that assumes both primary

withholding responsibility under chapter 3 of the Internal Revenue Code and primary Form 1099 reporting and backup withholding responsibility under chapter 61 and section 3406 of the Internal Revenue Code for the payment, a withholding agent can reliably associate a payment with valid documentation provided that it receives a valid qualified intermediary withholding certificate as described in paragraph (e)(3)(ii) of this section. In the case of a payment made to a withholding foreign partnership, the withholding agent can reliably associate the payment with valid documentation to the extent it can associate the payment with a valid withholding certificate described in § 1.1441–5(c)(2)(iv).

(3) *Presumptions regarding payee's status in the absence of documentation*—(i) *General rules.* A withholding agent that cannot, prior to the payment, reliably associate (within the meaning of paragraph (b)(2)(vii) of this section) a payment of an amount subject to withholding (as described in § 1.1441–2(a)) with valid documentation may rely on the presumptions of this paragraph (b)(3) to determine the status of the payee as a U.S. or a foreign person and the payee's other relevant characteristics (e.g., as an owner or intermediary, as an individual, trust, partnership, or corporation). The determination of withholding and reporting requirements applicable to payments to a person presumed to be a foreign person is governed only by the provisions of chapter 3 of the Code and the regulations thereunder. For the determination of withholding and reporting requirements applicable to payments to a person presumed to be a U.S. person, see chapter 61 of the Code, section 3402, 3405, or 3406, and the regulations under these provisions. A presumption that a payee is a foreign payee is not a presumption that the payee is a foreign beneficial owner. Therefore, the provisions of this paragraph (b)(3) have no effect for purposes of reducing the withholding rate if associating the payment with documentation of foreign beneficial ownership is required as a condition for such rate reduction. See paragraph (b)(3)(ix) of this section for consequences to a withholding agent that fails to withhold in accordance with the presumptions set forth in this paragraph (b)(3) or if the withholding agent has actual knowledge or reason to know of facts that are contrary to the presumptions set forth in this paragraph (b)(3). See paragraph (b)(2)(vii) of this section for rules regarding the extent which a withholding agent can reliably associate a payment with documentation.

(ii) *Presumptions of classification as individual, corporation, partnership, etc.* (A) *In general.* A withholding agent that cannot reliably associate a payment with a valid withholding certificate or that has received valid documentary evidence under §§ 1.1441–1(e)(1)(ii)(*2*) and 1.6049–5(c)(1) or (4) but cannot determine a payee's classification from the documentary evidence must apply the rules of this paragraph (b)(3)(ii) to determine the payee's classification as an individual, trust, estate, corporation, or partnership. The fact that a payee is presumed to have a certain status under the provisions of this paragraph (b)(3)(ii) does not mean that it is excused from furnishing documentation if documentation is otherwise required to obtain a reduced rate of withholding under this section. For example, if, for purposes of this paragraph (b)(3)(ii), a payee is presumed to be a tax-exempt organization based on § 1.6049–4(c)(1)(ii)(B), the withholding agent cannot rely on this presumption to reduce the rate of withholding on payments to such person (if such person is also presumed to be a foreign person under paragraph (b)(3)(iii)(A) of this section) because a reduction in the rate of withholding for payments to a foreign tax-exempt organization generally requires that a valid Form W–8 described in § 1.1441–9(b)(2) be furnished to the withholding agent.

(B) *No documentation provided.* If the withholding agent cannot reliably associate a payment with a valid withholding certificate or valid documentary evidence, it must presume that the payee is an individual, a trust, or an estate, if the payee appears to be such person (e.g., based on the payee's name or other indications). In the absence of reliable indications that the payee is an individual, trust, or an estate, the withholding agent must presume that the payee is a corporation or

one of the persons enumerated under §1.6049–4(c)(1)(ii)(B) through (Q) if it can be so treated under §1.6049–4(c)(1)(ii)(A)(*1*) or any one of the paragraphs under §1.6049–4(c)(1)(ii)(B) through (Q) without the need to furnish documentation. If the withholding agent cannot treat a payee as a person described in §1.6049–4(c)(1)(ii)(A)(*1*) through (Q), then the payee shall be presumed to be a partnership. If such a partnership is presumed to be foreign, it is not the beneficial owner of the income paid to it. See paragraph (c)(6) of this section. If such a partnership is presumed to be domestic, it is a U.S. non-exempt recipient for purposes of chapter 61 of the Internal Revenue Code.

(C) *Documentary evidence furnished for offshore account.* If the withholding agent receives valid documentary evidence, as described in §1.6049–5(c)(1) or (4), with respect to an offshore account from an entity but the documentary evidence does not establish the entity's classification as a corporation, trust, estate, or partnership, the withholding agent may presume (in the absence of actual knowledge otherwise) that the entity is the type of person enumerated under §1.6049–4 (c)(1)(ii)(B) through (Q) if it can be so treated under any one of those paragraphs without the need to furnish documentation. If the withholding agent cannot treat a payee as a person described in §1.6049–4(c)(1)(ii)(B) through (Q), then the payee shall be presumed to be a corporation unless the withholding agent knows, or has reason to know, that the entity is not classified as a corporation for U.S. tax purposes. If a payee is, or is presumed to be, a corporation under this paragraph (b)(3)(ii)(C) and a foreign person under paragraph (b)(3)(iii) of this section, a withholding agent shall not treat the payee as the beneficial owner of income if the withholding agent knows, or has reason to know, that the payee is not the beneficial owner of the income. For this purpose, a withholding agent shall have reason to know that the payee is not a beneficial owner if the documentary evidence indicates that the payee is a bank, broker, intermediary, custodian, or other agent, or is treated under §1.6049–4(c)(1)(ii)(B) through (Q) as such a person. A withholding agent may, however, treat such a person as a beneficial owner if the foreign person provides a statement, in writing and signed by a person with authority to sign the statement, that is attached to the documentary evidence stating it is the beneficial owner of the income.

(iii) *Presumption of U.S. or foreign status.* A payment that the withholding agent cannot reliably associate with documentation is presumed to be made to a U.S. person, except as otherwise provided in this paragraph (b)(3)(iii), in paragraphs (b)(3) (iv) and (v) of this section, or in §1.1441–5 (d) or (e).

(A) *Payments to exempt recipients.* If a withholding agent cannot reliably associate a payment with documentation from the payee and the payee is an exempt recipient (as determined under the provisions of §1.6049–4(c)(1)(ii) in the case of interest, or under similar provisions under chapter 61 of the Code applicable to the type of payment involved, but not including a payee that the withholding agent may treat as a foreign intermediary in accordance with paragraph (b)(3)(v) of this section), the payee is presumed to be a foreign person and not a U.S. person—

(*1*) If the withholding agent has actual knowledge of the payee's employer identification number and that number begins with the two digits ''98'';

(*2*) If the withholding agent's communications with the payee are mailed to an address in a foreign country;

(*3*) If the name of the payee indicates that the entity is the type of entity that is on the per se list of foreign corporations contained in §301.7701–2(b)(8)(i) of this chapter; or

(*4*) If the payment is made outside the United States (as defined in §1.6049–5(e)).

(B) *Scholarships and grants.* A payment representing taxable scholarship or fellowship grant income that does not represent compensation for services (but is not excluded from tax under section 117) and that a withholding agent cannot reliably associate with documentation is presumed to be made to a foreign person if the withholding agent has a record that the payee has a U.S. visa that is not an immigrant visa. See section 871(c) and

§ 1.1441–4(c) for applicable tax rate and withholding rules.

(C) *Pensions, annuities, etc.* A payment from a trust described in section 401(a), an annuity plan described in section 403(a), a payment with respect to any annuity, custodial account, or retirement income account described in section 403(b), or a payment from an individual retirement account or individual retirement annuity described in section 408 that a withholding agent cannot reliably associate with documentation is presumed to be made to a U.S. person only if the withholding agent has a record of a Social Security number for the payee and relies on a mailing address described in the following sentence. A mailing address is an address used for purposes of information reporting or otherwise communicating with the payee that is an address in the United States or in a foreign country with which the United States has an income tax treaty in effect and the treaty provides that the payee, if an individual resident in that country, would be entitled to an exemption from U.S. tax on amounts described in this paragraph (b)(3)(iii)(C). Any payment described in this paragraph (b)(3)(iii)(C) that is not presumed to be made to a U.S. person is presumed to be made to a foreign person. A withholding agent making a payment to a person presumed to be a foreign person may not reduce the 30-percent amount of withholding required on such payment unless it receives a withholding certificate described in paragraph (e)(2)(i) of this section furnished by the beneficial owner. For reduction in the 30-percent rate, see §§ 1.1441–4(e) or 1.1441–6(b).

(D) *Certain payments to offshore accounts.* A payment is presumed made to a foreign payee if the payment is made outside the United States (as defined in § 1.6049–5(e)) to an offshore account (as defined in § 1.6049–5(c)(1)) and the withholding agent does not have actual knowledge that the payee is a U.S. person. See § 1.6049–5(d)(2) and (3) for exceptions to this rule.

(E) *Certain payments for services.* A payment for services is presumed to be made to a foreign person if—

(*1*) The payee is an individual;

(*2*) The withholding agent does not know, or have reason to know, that the payee is a U.S. citizen or resident;

(*3*) The withholding agent does not know, or have reason to know, that the income is (or may be) effectively connected with the conduct of a trade or business within the United States; and

(*4*) All of the services for which the payment is made were performed by the payee outside of the United States.

(iv) *Grace period.* A withholding agent may choose to apply the provisions of § 1.6049–5(d)(2)(ii) regarding a 90-day grace period for purposes of this paragraph (b)(3) (by applying the term *withholding agent* instead of the term *payor*) to amounts described in § 1.1441–6(c)(2) and to amounts covered by a Form 8233 described in § 1.1441–4(b)(2)(ii). Thus, for these amounts, a withholding agent may choose to treat an account holder as a foreign person and withhold under chapter 3 of the Internal Revenue Code (and the regulations thereunder) while awaiting documentation. For purposes of determining the rate of withholding under this section, the withholding agent must withhold at the unreduced 30-percent rate at the time that the amounts are credited to an account. However, a withholding agent who can reliably associate the payment with a withholding certificate that is otherwise valid within the meaning of the applicable provisions except for the fact that it is transmitted by facsimile may rely on that facsimile form for purposes of withholding at the claimed reduced rate. For reporting of amounts credited both before and after the grace period, see § 1.1461–1(c)(4)(i)(A). The following adjustments shall be made at the expiration of the grace period:

(A) If, at the end of the grace period, the documentation is not furnished in the manner required under this section and the account holder is presumed to be a U.S. non-exempt recipient, then backup withholding applies to amounts credited to the account after the expiration of the grace period only. Amounts credited to the account during the grace period shall be treated as owned by a foreign payee and adjustments must be made to correct any underwithholding on such amounts in the manner described in § 1.1461–2.

(B) If, at the end of the grace period, the documentation is not furnished in the manner required under this section, or if documentation is furnished that does not support the claimed rate reduction, and the account holder is presumed to be a foreign person then adjustments must be made to correct any underwithholding on amounts credited to the account during the grace period, based on the adjustment procedures described in § 1.1461–2.

(v) *Special rules applicable to payments to foreign intermediaries*—(A) *Reliance on claim of status as foreign intermediary.* The presumption rules of paragraph (b)(3)(v)(B) of this section apply to a payment made to an intermediary (whether the intermediary is a qualified or nonqualified intermediary) that has provided a valid withholding certificate under paragraph (e)(3)(ii) or (iii) of this section (or has provided documentary evidence described in paragraph (b)(3)(ii)(C) of this section that indicates it is a bank, broker, custodian, intermediary, or other agent) to the extent the withholding agent cannot treat the payment as being reliably associated with valid documentation under the rules of paragraph (b)(2)(vii) of this section. For this purpose, a U.S. person's foreign branch that is a qualified intermediary defined in paragraph (e)(5)(ii) of this section shall be treated as a foreign intermediary. A payee that the withholding agent may not reliably treat as a foreign intermediary under this paragraph (b)(3)(v)(A) is presumed to be a payee other than an intermediary whose classification as an individual, corporation, partnership, etc., must be determined in accordance with paragraph (b)(3)(ii) of this section to the extent relevant. In addition, such payee is presumed to be a U.S. or a foreign payee based upon the presumptions described in paragraph (b)(3)(iii) of this section. The provisions of paragraph (b)(3)(v)(B) of this section are not relevant to a withholding agent that can reliably associate a payment with a withholding certificate from a person representing to be a qualified intermediary to the extent the qualified intermediary has assumed primary withholding responsibility in accordance with paragraph (e)(5)(iv) of this section.

(B) *Beneficial owner documentation or allocation information is lacking or unreliable.* Any portion of a payment that the withholding agent may treat as made to a foreign intermediary (whether a nonqualified or a qualified intermediary) but that the withholding agent cannot treat as reliably associated with valid documentation under the rules of paragraph (b)(2)(vii) of this section is presumed made to an unknown, undocumented foreign payee. As a result, a withholding agent must deduct and withhold 30 percent from any payment of an amount subject to withholding. If a withholding certificate attached to an intermediary certificate is another intermediary withholding certificate or a flow-through withholding certificate, the rules of this paragraph (b)(3)(v)(B) (or § 1.1441–5(d)(3) or (e)(6)(iii)) apply by treating the share of the payment allocable to the other intermediary or flow-through entity as if it were made directly to the other intermediary or flow-through entity. Any payment of an amount subject to withholding that is presumed made to an undocumented foreign person must be reported on Form 1042–S. See § 1.1461–1(c). See § 1.6049–5(d) for payments that are not subject to withholding.

(vi) *U.S. branches.* The rules of paragraph (b)(3)(v)(B) of this section shall apply to payments to a U.S. branch described in paragraph (b)(2)(iv)(A) of this section that has provided a withholding certificate as described in paragraph (e)(3)(v) of this section on which it has not agreed to be treated as a U.S. person.

(vii) *Joint payees*—(A) *In general.* Except as provided in paragraph (b)(3)(vii)(B) of this section, if a withholding agent makes a payment to joint payees and cannot reliably associate a payment with valid documentation from all payees, the payment is presumed made to an unidentified U.S. person. However, if one of the joint payees provides a Form W–9 furnished in accordance with the procedures described in §§ 31.3406(d)–1 through 31.3406(d)–5 of this chapter, the payment shall be treated as made to that payee. See § 31.3406(h)–2 of this chapter for rules to determine the relevant payee if more than one Form W–9 is

provided. For purposes of applying this paragraph (b)(3), the grace period rules in paragraph (b)(3)(iv) of this section shall apply only if each payee meets the conditions described in paragraph (b)(3)(iv) of this section.

(B) *Special rule for offshore accounts.* If a withholding agent makes a payment to joint payees and cannot reliably associate a payment with valid documentation from all payees, the payment is presumed made to an unknown foreign payee if the payment is made outside the United States (as defined in § 1.6049–5(e)) to an offshore account (as defined in § 1.6049–5(c)(1)).

(viii) *Rebuttal of presumptions.* A payee or beneficial owner may rebut the presumptions described in this paragraph (b)(3) by providing reliable documentation to the withholding agent or, if applicable, to the IRS.

(ix) *Effect of reliance on presumptions and of actual knowledge or reason to know otherwise*—(A) *General rule.* Except as otherwise provided in paragraph (b)(3)(ix)(B) of this section, a withholding agent that withholds on a payment under section 3402, 3405 or 3406 in accordance with the presumptions set forth in this paragraph (b)(3) shall not be liable for withholding under this section even it is later established that the beneficial owner of the payment is, in fact, a foreign person. Similarly, a withholding agent that withholds on a payment under this section in accordance with the presumptions set forth in this paragraph (b)(3) shall not be liable for withholding under section 3402 or 3405 or for backup withholding under section 3406 even if it is later established that the payee or beneficial owner is, in fact, a U.S. person. A withholding agent that, instead of relying on the presumptions described in this paragraph (b)(3), relies on its own actual knowledge to withhold a lesser amount, not withhold, or not report a payment, even though reporting of the payment or withholding a greater amount would be required if the withholding agent relied on the presumptions described in this paragraph (b)(3) shall be liable for tax, interest, and penalties to the extent provided under section 1461 and the regulations under that section. See paragraph (b)(7) of this section for provisions regarding such liability if the withholding agent fails to withhold in accordance with the presumptions described in this paragraph (b)(3).

(B) *Actual knowledge or reason to know that amount of withholding is greater than is required under the presumptions or that reporting of the payment is required.* Notwithstanding the provisions of paragraph (b)(3)(ix)(A) of this section, a withholding agent may not rely on the presumptions described in this paragraph (b)(3) to the extent it has actual knowledge or reason to know that the status or characteristics of the payee or of the beneficial owner are other than what is presumed under this paragraph (b)(3) and, if based on such knowledge or reason to know, it should withhold (under this section or another withholding provision of the Code) an amount greater than would be the case if it relied on the presumptions described in this paragraph (b)(3) or it should report (under this section or under another provision of the Code) an amount that would not otherwise be reportable if it relied on the presumptions described in this paragraph (b)(3). In such a case, the withholding agent must rely on its actual knowledge or reason to know rather than on the presumptions set forth in this paragraph (b)(3). Failure to do so and, as a result, failure to withhold the higher amount or to report the payment, shall result in liability for tax, interest, and penalties to the extent provided under sections 1461 and 1463 and the regulations under those sections.

(x) *Examples.* The provisions of this paragraph (b)(3) are illustrated by the following examples:

Example 1. A withholding agent, W, makes a payment of U.S. source dividends to person X, Inc. at an address outside the United States. W cannot reliably associate the payment to X with documentation. Under §§ 1.6042–3(b)(1)(vii) and 1.6049–4(c)(1)(ii)(A)(*1*), W may treat X as a corporation. Thus, under the presumptions described in paragraph (b)(3)(iii) of this section, W must presume that X is a foreign person (because the payment is made outside the United States). However, W knows that X is a U.S. person who is an exempt recipient. W may not rely on its actual knowledge to not withhold under this section. If W's knowledge is, in fact, incorrect, W would be liable for tax, interest, and, if applicable, penalties, under section 1461. W would be permitted to reduce

or eliminate its liability for the tax by establishing, in accordance with paragraph (b)(7) of this section, that the tax is not due or has been satisfied. If W's actual knowledge is, in fact, correct, W may nevertheless be liable for tax, interest, or penalties under section 1461 for the amount that W should have withheld based upon the presumptions. W would be permitted to reduce or eliminate its liability for the tax by establishing, in accordance with paragraph (b)(7) of this section, that its actual knowledge was, in fact, correct and that no tax or a lesser amount of tax was due.

Example 2. A withholding agent, W, makes a payment of U.S. source dividends to Y who does not qualify as an exempt recipient under §§1.6042–3(b)(1)(vii) and 1.6049–4(c)(1)(ii). W cannot reliably associate the payment to Y with documentation. Under the presumptions described in paragraph (b)(3)(iii) of this section, W must presume that Y is a U.S. person who is not an exempt recipient for purposes of section 6042. However, W knows that Y is a foreign person. W may not rely on its actual knowledge to withhold under this section rather than backup withhold under section 3406. If W's knowledge is, in fact, incorrect, W would be liable for tax, interest, and, if applicable, penalties, under section 3403. If W's actual knowledge is, in fact, correct, W may nevertheless be liable for tax, interest, or penalties under section 3403 for the amount that W should have withheld based upon the presumptions. Paragraph (b)(7) of this section does not apply to provide relief from liability under section 3403.

Example 3. A withholding agent, W, makes a payment of U.S. source dividends to X, Inc. W cannot reliably associate the payment to X, Inc. with documentation. X, Inc. presents none of the indicia of foreign status described in paragraph (b)(3)(iii)(A) of this section, but W has actual knowledge that X, Inc. is a foreign corporation. W may treat X, Inc. as an exempt recipient under §1.6042–3(b)(1)(vii). Because there are no indicia of foreign status, W would, absent actual knowledge or reason to know otherwise, be permitted to treat X, Inc. as a domestic corporation in accordance with the presumptions of paragraph (b)(3)(iii) of this section. However, under paragraph (b)(3)(ix)(B) of this section, W may not rely on the presumption of U.S. status since reliance on its actual knowledge requires that it withhold an amount greater than would be the case under the presumptions.

Example 4. A withholding agent, W, is a plan administrator who makes pension payments to person X with a mailing address in a foreign country with which the United States has an income tax treaty in effect. Under that treaty, the type of pension income paid to X is taxable solely in the country of residence. The plan administrator has a record of X's U.S. social security number. W has no actual knowledge or reason to know that X is a foreign person. W may rely on the presumption of paragraph (b)(3)(iii)(C) of this section in order to treat X as a U.S. person. Therefore, any withholding and reporting requirements for the payment are governed by the provisions of section 3405 and the regulations under that section.

(4) *List of exemptions from, or reduced rates of, withholding under chapter 3 of the Code.* A withholding agent that has determined that the payee is a foreign person for purposes of paragraph (b)(1) of this section must determine whether the payee is entitled to a reduced rate of withholding under section 1441, 1442, or 1443. This paragraph (b)(4) identifies items for which a reduction in the rate of withholding may apply and whether the rate reduction is conditioned upon documentation being furnished to the withholding agent. Documentation required under this paragraph (b)(4) is documentation that a withholding agent must be able to associate with a payment upon which it can rely to treat the payment as made to a foreign person that is the beneficial owner of the payment in accordance with paragraph (e)(1)(ii) of this section. This paragraph (b)(4) also cross-references other sections of the Code and applicable regulations in which some of these exceptions, exemptions, or reductions are further explained. See, for example, paragraph (b)(4)(viii) of this section, dealing with effectively connected income, that cross-references §1.1441–4(a); see paragraph (b)(4)(xv) of this section, dealing with exemptions from, or reductions of, withholding under an income tax treaty, that cross-references §1.1441–6. This paragraph (b)(4) is not an exclusive list of items to which a reduction of the rate of withholding may apply and, thus, does not preclude an exemption from, or reduction in, the rate of withholding that may otherwise be allowed under the regulations under the provisions of chapter 3 of the Code for a particular item of income identified in this paragraph (b)(4).

(i) Portfolio interest described in section 871(h) or 881(c) and substitute interest payments described in §1.871–7(b)(2) or 1.881–2(b)(2) are exempt from withholding under section 1441(a). See §1.871–14 for regulations regarding portfolio interest and section 1441(c)(9)

for exemption from withholding. Documentation establishing foreign status is required for interest on an obligation in registered form to qualify as portfolio interest. See section 871(h)(2)(B)(ii) and § 1.871–14(c)(1)(ii)(C). For special documentation rules regarding foreign-targeted registered obligations described in § 1.871–14(e)(2), see § 1.871–14(e) (3) and (4) and, in particular, § 1.871–14(e)(4)(i)(A) and (ii)(A) regarding the time when the withholding agent must receive the documentation. The documentation furnished for purposes of qualifying interest as portfolio interest serves as the basis for the withholding exemption for purposes of this section and for purposes of establishing foreign status for purposes of section 6049. See § 1.6049–5(b)(8). Documentation establishing foreign status is not required for qualifying interest on an obligation in bearer form described in § 1.871–14(b)(1) as portfolio interest. However, in certain cases, documentation for portfolio interest on a bearer obligation may have to be furnished in order to establish foreign status for purposes of the information reporting provisions of section 6049 and backup withholding under section 3406. See § 1.6049–5(b)(7).

(ii) Bank deposit interest and similar types of deposit interest (including original issue discount) described in section 871(i)(2)(A) or 881(d) that are from sources within the United States are exempt from withholding under section 1441(a). See section 1441(c)(10). Documentation establishing foreign status is not required for purposes of this withholding exemption but may have to be furnished for purposes of the information reporting provisions of section 6049 and backup withholding under section 3406. See § 1.6049–5(d)(3)(iii) for exceptions to the foreign payee and exempt recipient rules regarding this type of income. See also § 1.6049–5(b)(11) for applicable documentation exemptions for certain bank deposit interest paid on obligations in bearer form.

(iii) Bank deposit interest (including original issue discount) described in section 861(a)(1)(B) is exempt from withholding under sections 1441(a) as income that is not from U.S. sources. Documentation establishing foreign status is not required for purposes of this withholding exemption but may have to be furnished for purposes of the information reporting provisions of section 6049 and backup withholding under section 3406. Reporting requirements for payments of such interest are governed by section 6049 and the regulations under that section. See § 1.6049–5(b)(12) and alternative documentation rules under § 1.6049–5(c)(1).

(iv) Interest or original issue discount from sources within the United States on certain short-term obligations described in section 871(g)(1)(B) or 881(a)(3) is exempt from withholding under sections 1441(a). Documentation establishing foreign status is not required for purposes of this withholding exemption but may have to be furnished for purposes of the information reporting provisions of section 6049 and backup withholding under section 3406. See § 1.6049–5(b)(12) for applicable documentation for establishing foreign status and § 1.6049–5(d)(3)(iii) for exceptions to the foreign payee and exempt recipient rules regarding this type of income. See also § 1.6049–5(b)(10) for applicable documentation exemptions for certain obligations in bearer form.

(v) Income from sources without the United States is exempt from withholding under sections 1441(a). Documentation establishing foreign status is not required for purposes of this withholding exemption but may have to be furnished for purposes of the information reporting provisions of section 6049 or other applicable provisions of chapter 61 of the Code and backup withholding under section 3406. See, for example, § 1.6049–5(b) (6) and (12) and alternative documentation rules under § 1.6049–5(c). See also paragraph (b)(5) of this section for cross references to other applicable provisions of the regulations under chapter 61 of the Code.

(vi) Distributions from certain domestic corporations described in section 871(i)(2)(B) or 881(d) are exempt from withholding under section 1441(a). See section 1441(c)(10). Documentation establishing foreign status is not required for purposes of this withholding exemption but may have to be furnished for purposes of the information reporting provisions of section 6042 and

backup withholding under section 3406. See § 1.6042–3(b)(1) (iii) through (vi).

(vii) Dividends paid by certain foreign corporations that are treated as income from sources within the United States by reason of section 861(a)(2)(B) are exempt from withholding under section 884(e)(3) to the extent that the distributions are paid out of earnings and profits in any taxable year that the corporation was subject to branch profits tax for that year. Documentation establishing foreign status is not required for purposes of this withholding exemption but may have to be furnished for purposes of the information reporting provisions of section 6042 and backup withholding under section 3406. See § 1.6042–3(b)(1) (iii) through (vii).

(viii) Certain income that is effectively connected with the conduct of a U.S. trade or business is exempt from withholding under section 1441(a). See section 1441(c)(1). Documentation establishing foreign status and status of the income as effectively connected must be furnished for purposes of this withholding exemption to the extent required under the provisions of § 1.1441–4(a). Documentation furnished for this purpose also serves as documentation establishing foreign status for purposes of applicable information reporting provisions under chapter 61 of the Code and for backup withholding under section 3406. See, for example, § 1.6041–4(a)(1).

(ix) Certain income with respect to compensation for personal services of an individual that are performed in the United States is exempt from withholding under section 1441(a). See section 1441(c)(4) and § 1.1441–4(b). However, such income may be subject to withholding as wages under section 3402. Documentation establishing foreign status must be furnished for purposes of any withholding exemption or reduction to the extent required under § 1.1441–4(b) or 31.3401(a)(6)–1 (e) and (f) of this chapter. Documentation furnished for this purpose also serves as documentation establishing foreign status for purposes of information reporting under section 6041. See § 1.6041–4(a)(1).

(x) Amounts described in section 871(f) that are received as annuities from certain qualified plans are exempt from withholding under section 1441(a). See section 1441(c)(7). Documentation establishing foreign status must be furnished for purposes of the withholding exemption as required under § 1.1441–4(d). Documentation furnished for this purpose also serves as documentation establishing foreign status for purposes of information reporting under section 6041. See § 1.6041–4(a)(1).

(xi) Payments to a foreign government (including a foreign central bank of issue) that are excludable from gross income under section 892(a) are exempt from withholding under section 1442. See § 1.1441–8(b). Documentation establishing status as a foreign government is required for purposes of this withholding exemption. Payments to a foreign government are exempt from information reporting under chapter 61 of the Code (see § 1.6049–4(c)(1)(ii)(F)).

(xii) Payments of certain interest income to a foreign central bank of issue or the Bank for International Settlements that are exempt from tax under section 895 are exempt from withholding under section 1442. Documentation establishing eligibility for such exemption is required to the extent provided in § 1.1441–8(c)(1). Payments to a foreign central bank of issue or to the Bank for International Settlements are exempt from information reporting under chapter 61 of the Code (see § 1.6049–4(c)(1)(ii) (H) and (M)).

(xiii) Amounts derived by a foreign central bank of issue from bankers' acceptances described in section 871(i)(2)(C) or 881(d) are exempt from tax and, therefore, from withholding. See section 1441(c)(10). Documentation establishing foreign status is not required for purposes of this withholding exemption if the name of the payee and other facts surrounding the payment reasonably indicate that the beneficial owner of the payment is a foreign central bank of issue as defined in § 1.861–2(b)(4). See § 1.1441–8(c)(2) for withholding procedures. See also §§ 1.6049–4(c)(1)(ii)(H) and 1.6041–3(q)(8) for a similar exemption from information reporting.

(xiv) Payments to an international organization from investments in the United States of stocks, bonds, or

other domestic securities or from interest on deposits in banks in the United States of funds belonging to such international organization are exempt from tax under section 892(b) and, thus, from withholding. Documentation establishing status as an international organization is not required if the name of the payee and other facts surrounding the payment reasonably indicate that the beneficial owner of the payment is an international organization within the meaning of section 7701(a)(18). See § 1.1441–8(d). Payments to an international organization are exempt from information reporting under chapter 61 of the Code (see § 1.6049–4(c)(1)(ii)(G)).

(xv) Amounts may be exempt from, or subject to a reduced rate of, withholding under an income tax treaty. Documentation establishing eligibility for benefits under an income tax treaty is required for this purpose as provided under §§ 1.1441–6. Documentation furnished for this purpose also serves as documentation establishing foreign status for purposes of applicable information reporting provisions under chapter 61 of the Code and for backup withholding under section 3406. See, for example, § 1.6041–4(a)(1).

(xvi) Amounts of scholarships and grants paid to certain exchange or training program participants that do not represent compensation for services but are not excluded from tax under section 117 are subject to a reduced rate of withholding of 14-percent under section 1441(b). Documentation establishing foreign status is required for purposes of this reduction in rate as provided under § 1.1441–4(c). This income is not subject to information reporting under chapter 61 of the Code nor to backup withholding under section 3406. The compensatory portion of a scholarship or grant is reportable as wage income. See § 1.6041–3(o).

(xvii) Amounts paid to a foreign organization described in section 501(c) are exempt from withholding under section 1441 to the extent that the amounts are not income includible under section 512 in computing the organization's unrelated business taxable income and are not subject to the tax imposed by section 4948(a). Documentation establishing status as a tax-exempt organization is required for purposes of this exemption to the extent provided in § 1.1441–9. Amounts includible under section 512 in computing the organization's unrelated business taxable income are subject to withholding to the extent provided in section 1443(a) and § 1.1443–1(a). Gross investment income (as defined in section 4940(c)(2)) of a private foundation is subject to withholding at a 4-percent rate to the extent provided in section 1443(b) and § 1.1443–1(b). Payments to a tax-exempt organization are exempt from information reporting under chapter 61 of the Code and the regulations thereunder (see § 1.6049–4(c)(1)(ii)(B)(1)).

(xviii) Per diem amounts for subsistence paid by the U.S. government to a nonresident alien individual who is engaged in any program of training in the United States under the Mutual Security Act of 1954 are exempt from withholding under section 1441(a). See section 1441(c)(6). Documentation of foreign status is not required under § 1.1441–4(e) for purposes of establishing eligibility for this exemption. See § 1.6041–3(p).

(xix) Interest with respect to tax-free covenant bonds issued prior to 1934 is subject to special withholding procedures set forth in § 1.1461–1 in effect prior to January 1, 2001 (see § 1.1461–1 as contained in 26 CFR part 1, revised April 1, 1999).

(xx) Income from certain gambling winnings of a nonresident alien individual is exempt from tax under section 871(j) and from withholding under section 1441(a). See section 1441(c)(11). Documentation establishing foreign status is not required for purposes of this exemption but may have to be furnished for purposes of the information reporting provisions of section 6041 and backup withholding under section 3406. See §§ 1.6041–1 and 1.6041–4(a)(1).

(xxi) Any payments not otherwise mentioned in this paragraph (b)(4) shall be subject to withholding at the rate of 30-percent if it is an amount subject to withholding (as defined in § 1.1441–2(a)) unless and to the extent the IRS may otherwise prescribe in published guidance (see § 601.601(d)(2) of this chapter) or unless otherwise provided in regulations under chapter 3 of the Code.

(5) *Establishing foreign status under applicable provisions of chapter 61 of the Code.* This paragraph (b)(5) identifies relevant provisions of the regulations under chapter 61 of the Code that exempt payments from information reporting, and therefore, from backup withholding under section 3406, based on the payee's status as a foreign person. Many of these exemptions require that the payee's foreign status be established in order for the exemption to apply. The regulations under applicable provisions of chapter 61 of the Code generally provide that the documentation described in this section may be relied upon for purposes of determining foreign status.

(i) Payments to a foreign person that are governed by section 6041 (dealing with certain trade or business income) are exempt from information reporting under § 1.6041–4(a).

(ii) Payments to a foreign person that are governed by section 6041A (dealing with remuneration for services and certain sales) are exempt from information reporting under § 1.6041A–1(d)(3).

(iii) Payments to a foreign person that are governed by section 6042 (dealing with dividends) are exempt from information reporting under § 1.6042–3(b)(1) (iii) through (vi).

(iv) Payments to a foreign person that are governed by section 6044 (dealing with patronage dividends) are exempt from information reporting under § 1.6044–3(c)(1).

(v) Payments to a foreign person that are governed by section 6045 (dealing with broker proceeds) are exempt from information reporting under § 1.6045–1(g).

(vi) Payments to a foreign person that are governed by section 6049 (dealing with interest) to a foreign person are exempt from information reporting under § 1.6049–5(b) (6) through (15).

(vii) Payments to a foreign person that are governed by section 6050N (dealing with royalties) are exempt from information reporting under § 1.6050N–1(c).

(viii) Payments to a foreign person that are governed by section 6050P (dealing with income from cancellation of debt) are exempt from information reporting under section 6050P or the regulations under that section except to the extent provided in Notice 96–61 (1996–2 C.B. 227); see also § 601.601(b)(2) of this chapter.

(6) *Rules of withholding for payments by a foreign intermediary or certain U.S. branches*—(i) *In general.* A foreign intermediary described in paragraph (e)(3)(i) of this section or a U.S. branch described in paragraph (b)(2)(iv) of this section that receives an amount subject to withholding (as defined in § 1.1441–2(a)) shall be required to withhold (if another withholding agent has not withheld the full amount required) and report such payment under chapter 3 of the Internal Revenue Code and the regulations thereunder except as otherwise provided in this paragraph (b)(6). A nonqualified intermediary or U.S. branch described in paragraph (b)(2)(iv) of this section (other than a branch that is treated as a U.S. person) shall not be required to withhold or report if it has provided a valid nonqualified intermediary withholding certificate or a U.S. branch withholding certificate, it has provided all of the information required by paragraph (e)(3)(iv) of this section (withholding statement), and it does not know, and has no reason to know, that another withholding agent failed to withhold the correct amount or failed to report the payment correctly under § 1.1461–1(c). A qualified intermediary's obligations to withhold and report shall be determined in accordance with its qualified intermediary withholding agreement.

(ii) *Examples.* The following examples illustrate the rules of paragraph (b)(6)(i) of this section:

Example 1. FB, a foreign bank, acts as intermediary for five different persons, A, B, C, D, and E, each of whom owns U.S. securities that generate U.S. source dividends. The dividends are paid by USWA, a U.S. withholding agent. FB furnished USWA with a nonqualified intermediary withholding certificate, described in paragraph (e)(3)(iii) of this section, to which it attached the withholding certificates of each of A, B, C, D, and E. The withholding certificates from A and B claim a 15 percent reduced rate of withholding under an income tax treaty. C, D, and E claim no reduced rate of withholding. FB provides a withholding statement that meets all of the requirements of paragraph (e)(3)(iv) of this section, including information allocating 20 percent of each dividend payment to each of A, B, C, D, and E. FB

does not have actual knowledge or reason to know that USWA did not withhold the correct amounts or report the dividends on Forms 1042–S to each of A, B, C, D, and E. FB is not required to withhold or to report the dividends to A, B, C, D, and E.

Example 2. The facts are the same as in *Example 1,* except that FB did not provide any information for USWA to determine how much of the dividend payments were made to A, B, C, D, and E. Because USWA could not reliably associate the dividend payments with documentation under paragraph (b)(2)(vii) of this section, USWA applied the presumption rules of paragraph (b)(3)(v) of this section and withheld 30 percent from all dividend payments. In addition, USWA filed a single Form 1042–S reporting the payment to an unknown foreign payee. FB is deemed to know that USWA did not report the payment to A, B, C, D, and E because it did not provide all of the information required on a withholding statement under paragraph (e)(3)(iv) of this section (*i.e.,* allocation information). Although FB is not required to withhold on the payment because the full 30 percent withholding was imposed by USWA, it is required to report the payments on Forms 1042–S to A, B, C, D, and E. FB's intentional failure to do so will subject it to intentional disregard penalties under sections 6721 and 6722.

(7) *Liability for failure to obtain documentation timely or to act in accordance with applicable presumptions*—(i) *General rule.* A withholding agent that cannot reliably associate a payment with documentation on the date of payment and that does not withhold under this section, or withholds at less than the 30-percent rate prescribed under section 1441(a) and paragraph (b)(1) of this section, is liable under section 1461 for the tax required to be withheld under chapter 3 of the Code and the regulations thereunder, without the benefit of a reduced rate unless—

(A) The withholding agent has appropriately relied on the presumptions described in paragraph (b)(3) of this section (including the grace period described in paragraph (b)(3)(iv) of this section) in order to treat the payee as a U.S. person or, if applicable, on the presumptions described in §1.1441–4(a)(2)(ii) or (3)(i) to treat the payment as effectively connected income; or

(B) The withholding agent can demonstrate to the satisfaction of the district director or the Assistant Commissioner (International) that the proper amount of tax, if any, was in fact paid to the IRS; or

(C) No documentation is required under section 1441 or this section in order for a reduced rate of withholding to apply.

(D) The withholding agent has complied with the provisions of §1.1441–6(c) or (g).

(ii) *Proof that tax liability has been satisfied.* Proof of payment of tax may be established for purposes of paragraph (b)(7)(i)(B) of this section on the basis of a Form 4669 (or such other form as the IRS may prescribe in published guidance (see §601.601(d)(2) of this chapter)), establishing the amount of tax, if any, actually paid by or for the beneficial owner on the income. Proof that a reduced rate of withholding was, in fact, appropriate under the provisions of chapter 3 of the Code and the regulations thereunder may also be established after the date of payment by the withholding agent on the basis of a valid withholding certificate or other appropriate documentation furnished after that date. However, in the case of a withholding certificate or other appropriate documentation received after the date of payment (or after the grace period specified in paragraph (b)(3)(iv) of this section), the district director or the Assistant Commissioner (International) may require additional proof if it is determined that the delays in obtaining the withholding certificate affect its reliability.

(iii) *Liability for interest and penalties.* A withholding agent that has failed to withhold other than based on appropriate reliance on the presumptions described in paragraph (b)(3) of this section or in §1.1441–4(a)(2)(ii) or (3)(i) is not relieved from liability for interest under section 6601. Such liability exists even if there is no underlying tax liability due. The interest on the amount that should have been withheld shall be imposed as prescribed under section 6601 beginning on the last date for paying the tax due under section 1461 (which, under section 6601, is the due date for filing the withholding agent's return of tax). The interest shall stop accruing on the earlier of the date that the required withholding certificate or other documentation is provided to the withholding agent and to

the extent of the amount of tax that is determined not to be due based on documentation provided, or the date, and to the extent, that the unpaid tax liability under section 871, 881 or under section 1461 is satisfied. Further, in the event that a tax liability is assessed against the beneficial owner under section 871, 881, or 882 and interest under section 6601(a) is assessed against, and collected from, the beneficial owner, the interest charge imposed on the withholding agent shall be abated to that extent so as to avoid the imposition of a double interest charge. However, the withholding agent is not relieved of any applicable penalties. See section 1464.

(iv) *Special effective date.* See paragraph (f)(2)(ii) of this section for the special effective date applicable to this paragraph (b)(7).

(v) *Examples.* The provisions of paragraph (b)(7) of this section are illustrated by the following examples:

Example 1. On June 15, 2001, a withholding agent pays U.S. source interest on an obligation in registered form (issued after July 18, 1984) to a foreign corporation that it cannot reliably associate with a Form W–8 or other appropriate documentation upon which to rely to treat the beneficial owner as a foreign person. The withholding agent does not withhold from the payment. On September 30, 2003, the withholding agent receives from the foreign corporation a valid Form W–8 described in paragraph (e)(2)(ii) of this section. Thus, the interest qualifies as portfolio interest retroactively to June 15, 2001 (the date of payment). See §1.871–14(c)(3). The foreign corporation does not file a U.S. federal income tax return and does not pay the tax owed. The withholding agent is not liable under section 1461 for the 30-percent tax on the interest income because the receipt of the Form W–8 exempts the interest from tax for purposes of sections 881(a) and 1461. The withholding agent, however, is liable for interest on the amount of withholding that should have been deducted from the payment on June 15, 2001 and deposited. Under paragraph (b)(7)(iii) of this section, the period during which interest may be assessed against the withholding agent runs from March 15, 2002 (the due date for the Form 1042 relating to the payment) until September 30, 2003 (i.e., the date that appropriate documentation is furnished to the withholding agent).

Example 2. On June 15, 2001, a withholding agent pays U.S. source dividends to a foreign corporation that it cannot reliably associate with a Form W–8 or other appropriate documentation upon which to rely to treat the beneficial owner as a foreign person. The withholding agent does not withhold from the payment. On September 30, 2003, the withholding agent receives from the foreign corporation a valid Form W–8 described in paragraph (e)(2)(ii) of this section claiming a reduced 15-percent rate of withholding under a U.S. income tax treaty. The dividend qualifies for the reduced treaty rate retroactively to June 15, 2001 (the date of payment). The foreign corporation does not file a U.S. federal income tax return and does not pay the tax owed. Under section 1461, the withholding agent is liable only for a 15-percent tax on the dividend income because the receipt of the Form W–8 allows the tax rate to be reduced for purposes of sections 881(a) and 1461 from 30 percent to 15 percent. The withholding agent, however, is liable for interest on the full 30-percent amount that should have been deducted and withheld from the payment on June 15, 2001, and deposited, over a period running from March 15, 2002 (the due date for the Form 1042 relating to the payment) until September 30, 2003 (the date that the appropriate documentation is furnished to the withholding agent supporting a reduction in rate under a tax treaty). Additional interest may be assessed relating to the outstanding 15-percent tax liability (i.e., the portion of the 30-percent total tax liability that is not reduced under the treaty). Such additional interest runs from March 15, 2002, until such date as that 15-percent tax liability is satisfied by the withholding agent or the taxpayer (subject to abatement in order to avoid a double interest charge).

(8) *Adjustments, refunds, or credits of overwithheld amounts.* If the amount withheld under section 1441, 1442, or 1443 is greater than the tax due by the withholding agent or the taxpayer, adjustments may be made in accordance with the procedures described in §1.1461–2(a). Alternatively, refunds or credits may be claimed in accordance with the procedures described in §1.1464–1, relating to refunds or credits claimed by the beneficial owner, or §1.6414–1, relating to refunds or credits claimed by the withholding agent. If an amount was withheld under section 3406 or is subsequently determined to have been paid to a foreign person, see paragraph (b)(3)(vii) of this section and §31.6413(a)–3(a)(1) of this chapter.

(9) *Payments to joint owners.* A payment to joint owners that requires documentation in order to reduce the rate of withholding under chapter 3 of the Code and the regulations thereunder does not qualify for such reduced rate

unless the withholding agent can reliably associate the payment with documentation from each owner. Notwithstanding the preceding sentence, a payment to joint owners qualifies as a payment exempt from withholding under this section if any one of the owners provides a certificate of U.S. status on a Form W–9 in accordance with paragraph (d) (2) or (3) of this section or the withholding agent can associate the payment with an intermediary or flow-through withholding certificate upon which it can rely to treat the payment as made to a U.S. payee under paragraph (d)(4) of this section. See § 31.3406(h)–2(a)(3)(i)(B) of this chapter.

(c) *Definitions*—(1) *Withholding.* The term *withholding* means the deduction and withholding of tax at the applicable rate from the payment.

(2) *Foreign and U.S. person.* The term *foreign person* means a nonresident alien individual, a foreign corporation, a foreign partnership, a foreign trust, a foreign estate, and any other person that is not a U.S. person described in the next sentence. Solely for purposes of the regulations under chapter 3 of the Internal Revenue Code, the term *foreign person* also means, with respect to a payment by a withholding agent, a foreign branch of a U.S. person that furnishes an intermediary withholding certificate described in paragraph (e)(3)(ii) of this section. Such a branch continues to be a U.S. payor for purposes of chapter 61 of the Internal Revenue Code. See § 1.6049–5(c)(4). A U.S. person is a person described in section 7701(a)(30), the U.S. government (including an agency or instrumentality thereof), a State (including an agency or instrumentality thereof), or the District of Columbia (including an agency or instrumentality thereof).

(3) *Individual*—(i) *Alien individual.* The term *alien individual* means an individual who is not a citizen or a national of the United States. See § 1.1–1(c).

(ii) *Nonresident alien individual.* The term *nonresident alien individual* means a person described in section 7701(b)(1)(B), an alien individual who is a resident of a foreign country under the residence article of an income tax treaty and § 301.7701(b)–7(a)(1) of this chapter, or an alien individual who is a resident of Puerto Rico, Guam, the Commonwealth of Northern Mariana Islands, the U.S. Virgin Islands, or American Samoa as determined under § 301.7701(b)–1(d) of this chapter. An alien individual who has made an election under section 6013 (g) or (h) to be treated as a resident of the United States is nevertheless treated as a nonresident alien individual for purposes of withholding under chapter 3 of the Code and the regulations thereunder.

(4) *Certain foreign corporations.* For purposes of this section, a corporation created or organized in Guam, the Commonwealth of Northern Mariana Islands, the U.S. Virgin Islands, and American Samoa, is not treated as a foreign corporation if the requirements of sections 881(b)(1) (A), (B), and (C) are met for such corporation. Further, a payment made to a foreign government or an international organization shall be treated as a payment made to a foreign corporation for purposes of withholding under chapter 3 of the Code and the regulations thereunder.

(5) *Financial institution and foreign financial institution.* For purposes of the regulations under chapter 3 of the Code, the term *financial institution* means a person described in § 1.165–12(c)(1)(iv) (not including a person providing pension or other similar benefits or a regulated investment company or other mutual fund, unless otherwise indicated) and the term *foreign financial institution* means a financial institution that is a foreign person, as defined in paragraph (c)(2) of this section.

(6) *Beneficial owner*—(i) *General rule.* This paragraph (c)(6) defines the term *beneficial owner* for payments of income other than a payment for which a reduced rate of withholding is claimed under an income tax treaty. The term *beneficial owner* means the person who is the owner of the income for tax purposes and who beneficially owns that income. A person shall be treated as the owner of the income to the extent that it is required under U.S. tax principles to include the amount paid in gross income under section 61 (determined without regard to an exclusion or exemption from gross income under the Internal Revenue Code). Beneficial ownership of income is determined under the provisions of section 7701(l)

and the regulations under that section and any other applicable general U.S. tax principles, including principles governing the determination of whether a transaction is a conduit transaction. Thus, a person receiving income in a capacity as a nominee, agent, or custodian for another person is not the beneficial owner of the income. In the case of a scholarship, the student receiving the scholarship is the beneficial owner of that scholarship. In the case of a payment of an amount that is not income, the beneficial owner determination shall be made under this paragraph (c)(6) as if the amount were income.

(ii) *Special rules*—(A) *General rule.* The beneficial owners of income paid to an entity described in this paragraph (c)(6)(ii) are those persons described in paragraphs (c)(6)(ii)(B) through (D) of this section.

(B) *Foreign partnerships.* The beneficial owners of income paid to a foreign partnership (whether a nonwithholding or a withholding foreign partnership) are the partners in the partnership, unless they themselves are not the beneficial owners of the income under this paragraph (c)(6). For example, a partnership (first tier) that is a partner in another partnership (second tier) is not the beneficial owner of income paid to the second tier partnership since the first tier partnership is not the owner of the income under U.S. tax principles. Rather, the partners of the first tier partnership are the beneficial owners (to the extent they are not themselves persons that are not beneficial owners under this paragraph (c)(6)). See §1.1441–5(b) for applicable withholding procedures for payments to a domestic partnership. See also §1.1441–5(c)(3)(ii) for applicable withholding procedures for payments to a foreign partnership where one of the partners (at any level in the chain of tiers) is a domestic partnership.

(C) *Foreign simple trusts and foreign grantor trusts.* The beneficial owners of income paid to a foreign simple trust, as described in paragraph (c)(23) of this section, are the beneficiaries of the trust, unless they themselves are not the beneficial owners of the income under this paragraph (c)(6). The beneficial owners of income paid to a foreign grantor trust, as described in paragraph (c)(26) of this section, are the persons treated as the owners of the trust, unless they themselves are not the beneficial owners of the income under this paragraph (c)(6).

(D) *Other foreign trusts and foreign estates.* The beneficial owner of income paid to a foreign complex trust as defined in paragraph (c)(25) of this section or to a foreign estate is the foreign complex trust or estate itself.

(7) *Withholding agent.* For a definition of the term *withholding agent* and applicable rules, see §1.1441–7.

(8) *Person.* For purposes of the regulations under chapter 3 of the Code, the term *person* shall mean a person described in section 7701(a)(1) and the regulations under that section and a U.S. branch to the extent treated as a U.S. person under paragraph (b)(2)(iv) of this section. For purposes of the regulations under chapter 3 of the Code, the term *person* does not include a wholly-owned entity that is disregarded for federal tax purposes under §301.7701–2(c)(2) of this chapter as an entity separate from its owner. See paragraph (b)(2)(iii) of this section for procedures applicable to payments to such entities.

(9) *Source of income.* The source of income is determined under the provisions of part I (section 861 and following) , subchapter N, chapter 1 of the Code and the regulations under those provisions.

(10) *Chapter 3 of the Code.* For purposes of the regulations under sections 1441, 1442, and 1443, any reference to chapter 3 of the Code shall not include references to sections 1445 and 1446, unless the context indicates otherwise.

(11) *Reduced rate.* For purposes of regulations under chapter 3 of the Code, and other withholding provisions of the Code, the term *reduced rate,* when used in regulations under chapter 3 of the Code, shall include an exemption from tax.

(12) *Payee.* For purposes of chapter 3 of the Internal Revenue Code, the term *payee* of a payment is determined under paragraph (b)(2) of this section, §1.1441–5(c)(1) (relating to partnerships), and §1.1441–5(e)(2) and (3) (relating to trusts and estates) and includes foreign persons, U.S. exempt recipients, and U.S.

non-exempt recipients. A nonqualified intermediary and a qualified intermediary (to the extent it does not assume primary withholding responsibility) are not payees if they are acting as intermediaries and not the beneficial owner of income. In addition, a flow-through entity is not a payee unless the income is (or is deemed to be) effectively connected with the conduct of a trade or business in the United States. See §1.6049–5(d)(1) for rules to determine the payee for purposes of chapter 61 of the Internal Revenue Code. See §§1.1441–1(b)(3), 1.1441–5(d), and (e)(6) and 1.6049–5(d)(3) for presumption rules that apply if a payee's identity cannot be determined on the basis of valid documentation.

(13) *Intermediary*. An *intermediary* means, with respect to a payment that it receives, a person that, for that payment, acts as a custodian, broker, nominee, or otherwise as an agent for another person, regardless of whether such other person is the beneficial owner of the amount paid, a flow-through entity, or another intermediary.

(14) *Nonqualified intermediary*. A *nonqualified intermediary* means any intermediary that is not a U.S. person and not a qualified intermediary, as defined in paragraph (e)(5)(ii) of this section, or a qualified intermediary that is not acting in its capacity as a qualified intermediary with respect to a payment. For example, to the extent an entity that is a qualified intermediary provides another withholding agent with a foreign beneficial owner withholding certificate as defined in paragraph (e)(2)(i) of this section, the entity is not acting in its capacity as a qualified intermediary. Notwithstanding the preceding sentence, a qualified intermediary is acting as a qualified intermediary to the extent it provides another withholding agent with Forms W–9, or other information regarding U.S. non-exempt recipients pursuant to its qualified intermediary agreement with the IRS.

(15) *Qualified intermediary*. The term *qualified intermediary* is defined in paragraph (e)(5)(ii) of this section.

(16) *Withholding certificate*. The term *withholding certificate* means a Form W–8 described in paragraph (e)(2)(i) of this section (relating to foreign beneficial owners), paragraph (e)(3)(i) of this section (relating to foreign intermediaries), §1.1441–5(c)(2)(iv), (c)(3)(iii), and (e)(3)(iv) (relating to flow-through entities), a Form 8233 described in §1.1441–4(b)(2), a Form W–9 as described in paragraph (d) of this section, a statement described in §1.871–14(c)(2)(v) (relating to portfolio interest), or any other certificates that under the Internal Revenue Code or regulations certifies or establishes the status of a payee or beneficial owner as a U.S. or a foreign person.

(17) *Documentary evidence; other appropriate documentation*. The terms *documentary evidence* or *other appropriate documentation* refer to documents other than a withholding certificate that may be provided for payments made outside the United States to offshore accounts or any other evidence that under the Internal Revenue Code or regulations certifies or establishes the status of a payee or beneficial owner as a U.S. or foreign person. See §§1.1441–6(b)(2), (c)(3) and (4) (relating to treaty benefits), and 1.6049–5(c)(1) and (4) (relating to chapter 61 reporting). Also see §1.1441–4(a)(3)(ii) regarding documentary evidence for notional principal contracts.

(18) *Documentation*. The term *documentation* refers to both withholding certificates, as defined in paragraph (c)(16) of this section, and documentary evidence or other appropriate documentation, as defined in paragraph (c)(17) of this section.

(19) *Payor*. The term *payor* is defined in §31.3406(a)–2 of this chapter and §1.6049–4(a)(2) and generally includes a withholding agent, as defined in §1.1441–7(a). The term also includes any person that makes a payment to an intermediary, flow-through entity, or U.S. branch that is not treated as a U.S. person to the extent the intermediary, flow-through, or U.S. branch provides a Form W–9 or other appropriate information relating to a payee so that the payment can be reported under chapter 61 of the Internal Revenue Code and, if required, subject to backup withholding under section 3406. This latter rule does not preclude the intermediary, flow-through entity, or U.S. branch from also being a payor.

(20) *Exempt recipient.* The term *exempt recipient* means a person that is exempt from reporting under chapter 61 of the Internal Revenue Code and backup withholding under section 3406 and that is described in §§ 1.6041–3(q), 1.6045–2(b)(2)(i), and 1.6049–4(c)(1)(ii), and § 5f.6045–1(c)(3)(i)(B) of this chapter. Exempt recipients are not exempt from withholding under chapter 3 of the Internal Revenue Code unless they are U.S. persons or foreign persons entitled to an exemption from withholding under chapter 3.

(21) *Non-exempt recipient.* A *non-exempt recipient* is any person that is not an exempt recipient under paragraph (c)(20) of this section.

(22) *Reportable amounts. Reportable amounts* are defined in paragraph (e)(3)(vi) of this section.

(23) *Flow-through entity.* A *flow-through entity* means any entity that is described in this paragraph (c)(23) and that may provide documentation on behalf of others to a withholding agent. The entities described in this paragraph are a foreign partnership (other than a withholding foreign partnership), a foreign simple trust (other than a withholding foreign trust) that is described in paragraph (c)(24) of this section, a foreign grantor trust (other than a withholding foreign trust) that is described in paragraph (c)(25) of this section, or, for any payments for which a reduced rate of withholding under an income tax treaty is claimed, any entity to the extent the entity is considered to be fiscally transparent under section 894 with respect to the payment by an interest holder's jurisdiction.

(24) *Foreign simple trust.* A *foreign simple trust* is a foreign trust that is described in section 651(a).

(25) *Foreign complex trust.* A *foreign complex trust* is a foreign trust other than a trust described in section 651(a) or sections 671 through 679.

(26) *Foreign grantor trust.* A *foreign grantor trust* is a foreign trust but only to the extent all or a portion of the income of the trust is treated as owned by the grantor or another person under sections 671 through 679.

(27) *Partnership.* The term *partnership* means any entity treated as a partnership under § 301.7701–2 or –3 of this chapter.

(28) *Nonwithholding foreign partnership.* A *nonwithholding foreign partnership* is a foreign partnership that is not a withholding foreign partnership, as defined in § 1.1441–5(c)(2)(i).

(29) *Withholding foreign partnership.* A withholding foreign partnership is defined in § 1.1441–5(c)(2)(i).

(30) *Possessions of the United States.* For purposes of the regulations under chapters 3 and 61 of the Internal Revenue Code, *possessions of the United States* means Guam, American Samoa, the Northern Mariana Islands, Puerto Rico, and the Virgin Islands.

(d) *Beneficial owner's or payee's claim of U.S. status*—(1) *In general.* Under paragraph (b)(1) of this section, a withholding agent is not required to withhold under chapter 3 of the Code on payments to a U.S. payee, to a person presumed to be a U.S. payee in accordance with the provisions of paragraph (b)(3) of this section, or to a person that the withholding agent may treat as a U.S. beneficial owner of the payment. Absent actual knowledge or reason to know otherwise, a withholding agent may rely on the provisions of this paragraph (d) in order to determine whether to treat a payee or beneficial owner as a U.S. person.

(2) *Payments for which a Form W–9 is otherwise required.* A withholding agent may treat as a U.S. payee any person who is required to furnish a Form W–9 and who furnishes it in accordance with the procedures described in §§ 31.3406(d)–1 through 31.3406(d)–5 of this chapter (including the requirement that the payee furnish its taxpayer identifying number (TIN)) if the withholding agent meets all the requirements described in § 31.3406(h)–3(e) of this chapter regarding reliance by a payor on a Form W–9. Providing a Form W–9 or valid substitute form shall serve as a statement that the person whose name is on the form is a U.S. person. Therefore, a foreign person, including a U.S. branch treated as a U.S. person under paragraph (b)(2)(iv) of this section, shall not provide a Form W–9. A U.S. branch of a foreign person may establish its status as a foreign person exempt from reporting under chapter 61 and backup withholding under section 3406 by providing a withholding certificate on Form W–8.

(3) *Payments for which a Form W–9 is not otherwise required.* In the case of a payee who is not required to furnish a Form W–9 under section 3406 (e.g., a person exempt from reporting under chapter 61 of the Internal Revenue Code), the withholding agent may treat the payee as a U.S. payee if the payee provides the withholding agent with a Form W–9 or a substitute form described in §31.3406(h)–3(c)(2) of this chapter (relating to forms for exempt recipients) that contains the payee's name, address, and TIN. The form must be signed under penalties of perjury by the payee if so required by the form or by §31.3406(h)–3 of this chapter. Providing a Form W–9 or valid substitute form shall serve as a statement that the person whose name is on the certificate is a U.S. person. A Form W–9 or valid substitute form shall not be provided by a foreign person, including any U.S. branch of a foreign person whether or not the branch is treated as a U.S. person under paragraph (b)(2)(iv) of this section. See paragraph (e)(3)(v) of this section for withholding certificates provided by U.S. branches described in paragraph (b)(2)(iv) of this section. The procedures described in §31.3406(h)–2(a) of this chapter shall apply to payments to joint payees. A withholding agent that receives a Form W–9 to satisfy this paragraph (d)(3) must retain the form in accordance with the provisions of §31.3406(h)–3(g) of this chapter, if applicable, or of paragraph (e)(4)(iii) of this section (relating to the retention of withholding certificates) if §31.3406(h)–3(g) of this chapter does not apply. The rules of this paragraph (d)(3) are only intended to provide a method by which a withholding agent may determine that a payee is a U.S. person and do not otherwise impose a requirement that documentation be furnished by a person who is otherwise treated as an exempt recipient for purposes of the applicable information reporting provisions under chapter 61 of the Internal Revenue Code (*e.g.*, §1.6049–4(c)(1)(ii) for payments of interest).

(4) *When a payment to an intermediary or flow-through entity may be treated as made to a U.S. payee.* A withholding agent that makes a payment to an intermediary (whether a qualified intermediary or nonqualified intermediary), a flow-through entity, or a U.S. branch described in paragraph (b)(2)(iv) of this section may treat the payment as made to a U.S. payee to the extent that, prior to the payment, the withholding agent can reliably associate the payment with a Form W–9 described in paragraph (d)(2) or (3) of this section attached to a valid intermediary, flow-through, or U.S. branch withholding certificate described in paragraph (e)(3)(i) of this section or to the extent the withholding agent can reliably associate the payment with a Form W–8 described in paragraph (e)(3)(v) of this section that evidences an agreement to treat a U.S. branch described in paragraph (b)(2)(iv) of this section as a U.S. person. In addition, a withholding agent may treat the payment as made to a U.S. payee only if it complies with the electronic confirmation procedures described in paragraph (e)(4)(v) of this section, if required, and it has not been notified by the IRS that any of the information on the withholding certificate or other documentation is incorrect or unreliable. In the case of a Form W–9 that is required to be furnished for a reportable payment that may be subject to backup withholding, the withholding agent may be notified in accordance with section 3406(a)(1)(B) and the regulations under that section. See applicable procedures under section 3406(a)(1)(B) and the regulations under that section for payors who have been notified with regard to such a Form W–9. Withholding agents who have been notified in relation to other Forms W–9, including under section 6724(b) pursuant to section 6721, may rely on the withholding certificate or other documentation only to the extent provided under procedures as prescribed by the IRS (see §601.601(d)(2) of this chapter).

(e) *Beneficial owner's claim of foreign status*—(1) *Withholding agent's reliance*—(i) *In general.* Absent actual knowledge or reason to know otherwise, a withholding agent may treat a payment as made to a foreign beneficial owner in accordance with the provisions of paragraph (e)(1)(ii) of this section. See paragraph (e)(4)(viii) of this section for

applicable reliance rules. See paragraph (b)(4) of this section for a description of payments for which a claim of foreign status is relevant for purposes of claiming a reduced rate of withholding for purposes of section 1441, 1442, or 1443. See paragraph (b)(5) of this section for a list of payments for which a claim of foreign status is relevant for other purposes, such as claiming an exemption from information reporting under chapter 61 of the Code.

(ii) *Payments that a withholding agent may treat as made to a foreign person that is a beneficial owner*—(A) *General rule.* The withholding agent may treat a payment as made to a foreign person that is a beneficial owner if it complies with the requirements described in paragraph (e)(1)(ii)(B) of this section and, then, only to the extent—

(*1*) That the withholding agent can reliably associate the payment with a beneficial owner withholding certificate described in paragraph (e)(2) of this section furnished by the person whose name is on the certificate or attached to a valid foreign intermediary, flow-through, or U.S. branch withholding certificate;

(*2*) That the payment is made outside the United States (within the meaning of § 1.6049–5(e)) to an offshore account (within the meaning of § 1.6049–5(c)(1)) and the withholding agent can reliably associate the payment with documentary evidence described in §§ 1.1441–6(c)(3) or (4), or 1.6049–5(c)(1) relating to the beneficial owner;

(*3*) That the withholding agent can reliably associate the payment with a valid qualified intermediary withholding certificate, as described in paragraph (e)(3)(ii) of this section, and the qualified intermediary has provided sufficient information for the withholding agent to allocate the payment to a withholding rate pool other than a withholding rate pool or pools established for U.S. non-exempt recipients;

(*4*) That the withholding agent can reliably associate the payment with a withholding certificate described in § 1.1441–5(c)(3)(iii) or (e)(5)(iii) from a flow-through entity claiming the income is effectively connected income;

(*5*) That the withholding agent identifies the payee as a U.S. branch described in paragraph (b)(2)(iv) of this section, the payment to which it treats as effectively connected income in accordance with § 1.1441–4(a) (2)(ii) or (3);

(*6*) That the withholding agent identifies the payee as an international organization (or any wholly-owned agency or instrumentality thereof) as defined in section 7701(a)(18) that has been designated as such by executive order (pursuant to 22 U.S.C. 288 through 288(f)); or

(*7*) That the withholding agent pays interest from bankers' acceptances and identifies the payee as a foreign central bank of issue (as defined in § 1.861–2(b)(4)).

(B) *Additional requirements.* In order for a payment described in paragraph (e)(1)(ii)(A) of this section to be treated as made to a foreign beneficial owner, the withholding agent must hold the documentation (if required) prior to the payment, comply with the electronic confirmation procedures described in paragraph (e)(4)(v) of this section (if required), and must not have been notified by the IRS that any of the information on the withholding certificate or other documentation is incorrect or unreliable. If the withholding agent has been so notified, it may rely on the withholding certificate or other documentation only to the extent provided under procedures prescribed by the IRS (see § 601.601(d)(2) of this chapter). See paragraph (b)(2)(vii) of this section for rules regarding reliable association of a payment with a withholding certificate or other appropriate documentation.

(2) *Beneficial owner withholding certificate*—(i) *In general.* A beneficial owner withholding certificate is a statement by which the beneficial owner of the payment represents that it is a foreign person and, if applicable, claims a reduced rate of withholding under section 1441. A separate withholding certificate must be submitted to each withholding agent. If the beneficial owner receives more than one type of payment from a single withholding agent, the beneficial owner may have to submit more than one withholding certificate to the single withholding

agent for the different types of payments as may be required by the applicable forms and instructions, or as the withholding agent may require (such as to facilitate the withholding agent's compliance with its obligations to determine withholding under this section or the reporting of the amounts under § 1.1461–1 (b) and (c)). For example, if a beneficial owner claims that some but not all of the income it receives is effectively connected with the conduct of a trade or business in the United States, it may be required to submit two separate withholding certificates, one for income that is not effectively connected and one for income that is so connected. See § 1.1441–6(b)(2) for special rules for determining who must furnish a beneficial owner withholding certificate when a benefit is claimed under an income tax treaty. See paragraph (e)(4)(ix) of this section for reliance rules in the case of certificates held by another person or at a different branch location of the same person.

(ii) *Requirements for validity of certificate.* A beneficial owner withholding certificate is valid only if it is provided on a Form W–8, or a Form 8233 in the case of personal services income described in § 1.1441–4(b) or certain scholarship or grant amounts described in § 1.1441–4(c) (or a substitute form described in paragraph (e)(4)(vi) of this section, or such other form as the IRS may prescribe). A Form W–8 is valid only if its validity period has not expired, it is signed under penalties of perjury by the beneficial owner, and it contains all of the information required on the form. The required information is the beneficial owner's name, permanent residence address, and TIN (if required), the country under the laws of which the beneficial owner is created, incorporated, or governed (if a person other than an individual), the classification of the entity, and such other information as may be required by the regulations under section 1441 or by the form or accompanying instructions in addition to, or in lieu of, the information described in this paragraph (e)(2)(ii). A person's permanent residence address is an address in the country where the person claims to be a resident for purposes of that country's income tax. In the case of a certificate furnished in order to claim a reduced rate of withholding under an income tax treaty, the residence must be determined in the manner prescribed under the applicable treaty. See § 1.1441–6(b). The address of a financial institution with which the beneficial owner maintains an account, a post office box, or an address used solely for mailing purposes is not a residence address for this purpose. If the beneficial owner is an individual who does not have a tax residence in any country, the permanent residence address is the place at which the beneficial owner normally resides. If the beneficial owner is not an individual and does not have a tax residence in any country, then the permanent residence address is the place at which the person maintains its principal office. See paragraph (e)(4)(vii) of this section for circumstances in which a TIN is required on a beneficial owner withholding certificate. See paragraph (f)(2)(i) of this section for continued validity of certificates during a transition period.

(3) *Intermediary, flow-through, or U.S. branch withholding certificate*—(i) *In general.* An intermediary withholding certificate is a Form W–8 by which a payee represents that it is a foreign person and that it is an intermediary (whether a qualified or nonqualified intermediary) with respect to a payment and not the beneficial owner. See paragraphs (e)(3)(ii) and (iii) of this section. A flow-through withholding certificate is a Form W–8 used by a flow-through entity as defined in paragraph (c)(23) of this section. See § 1.1441–5(c)(3)(iii) (a nonwithholding foreign partnership), § 1.1441–5(e)(5)(iii) (a foreign simple trust or foreign grantor trust) or § 1.1441–6(b)(2) (foreign entity presenting claims on behalf of its interest holders for a reduced rate of withholding under an income tax treaty). A U.S. branch certificate is a Form W–8 furnished under paragraph (e)(3)(v) of this section by a U.S. branch described in paragraph (b)(2)(iv) of this section. See paragraph (e)(4)(viii) of this section for applicable reliance rules.

(ii) *Intermediary withholding certificate from a qualified intermediary.* A qualified intermediary shall provide a qualified

intermediary withholding certificate for reportable amounts received by the qualified intermediary. See paragraph (e)(3)(vi) of this section for the definition of reportable amount. A qualified intermediary withholding certificate is valid only if it is furnished on a Form W–8, an acceptable substitute form, or such other form as the IRS may prescribe, it is signed under penalties of perjury by a person with authority to sign for the qualified intermediary, its validity has not expired, and it contains the following information, statement, and certifications—

(A) The name, permanent residence address (as described in paragraph (e)(2)(ii) of this section), qualified intermediary employer identification number (QI-EIN), and the country under the laws of which the intermediary is created, incorporated, or governed. A qualified intermediary that does not act in its capacity as a qualified intermediary must not use its QI-EIN. Rather the intermediary should provide a nonqualified intermediary withholding certificate, if it is acting as an intermediary, and should use the taxpayer identification number, if any, that it uses for all other purposes;

(B) A certification that, with respect to accounts it identifies on its withholding statement (as described in paragraph (e)(5)(v) of this section), the qualified intermediary is not acting for its own account but is acting as a qualified intermediary;

(C) A certification that the qualified intermediary has provided, or will provide, a withholding statement as required by paragraph (e)(5)(v) of this section; and

(D) Any other information, certifications, or statements as may be required by the form or accompanying instructions in addition to, or in lieu of, the information and certifications described in this paragraph (e)(3)(ii) or paragraph (e)(3)(v) of this section. See paragraph (e)(5)(v) of this section for the requirements of a withholding statement associated with the qualified intermediary withholding certificate.

(iii) *Intermediary withholding certificate from a nonqualified intermediary*. A nonqualified intermediary shall provide a nonqualified intermediary withholding certificate for reportable amounts received by the nonqualified intermediary. See paragraph (e)(3)(vi) of this section for the definition of reportable amount. A nonqualified intermediary withholding certificate is valid only to the extent it is furnished on a Form W–8, an acceptable substitute form, or such other form as the IRS may prescribe, it is signed under penalties of perjury by a person authorized to sign for the nonqualified intermediary, it contains the information, statements, and certifications described in this paragraph (e)(3)(iii) and paragraph (e)(3)(iv) of this section, its validity has not expired, and the withholding certificates and other appropriate documentation for all persons to whom the certificate relates are associated with the certificate. Withholding certificates and other appropriate documentation consist of beneficial owner withholding certificates described in paragraph (e)(2)(i) of this section, intermediary and flow-through withholding certificates described in paragraph (e)(3)(i) of this section, withholding foreign partnership certificates described in §1.1441–5(c)(2)(iv), documentary evidence described in §§1.1441–6(c)(3) or (4) and 1.6049–5(c)(1), and any other documentation or certificates applicable under other provisions of the Internal Revenue Code or regulations that certify or establish the status of the payee or beneficial owner as a U.S. or a foreign person. If a nonqualified intermediary is acting on behalf of another nonqualified intermediary or a flow-through entity, then the nonqualified intermediary must associate with its own withholding certificate the other nonqualified intermediary withholding certificate or the flow-through withholding certificate and separately identify all of the withholding certificates and other appropriate documentation that are associated with the withholding certificate of the other nonqualified intermediary or flow-through entity. Nothing in this paragraph (e)(3)(iii) shall require an intermediary to furnish original documentation. Copies of certificates or documentary evidence may be transmitted to the U.S. withholding agent,

in which case the nonqualified intermediary must retain the original documentation for the same time period that the copy is required to be retained by the withholding agent under paragraph (e)(4)(iii) of this section and must provide it to the withholding agent upon request. For purposes of this paragraph (e)(3)(iii), a valid intermediary withholding certificate also includes a statement described in § 1.871–14(c)(2)(v) furnished for interest to qualify as portfolio interest for purposes of sections 871(h) and 881(c). The information and certifications required on a Form W–8 described in this paragraph (e)(3)(iii) are as follows—

(A) The name and permanent resident address (as described in paragraph (e)(2)(ii) of this section) of the nonqualified intermediary, and the country under the laws of which the nonqualified intermediary is created, incorporated, or governed;

(B) A certification that the nonqualified intermediary is not acting for its own account;

(C) If the nonqualified intermediary withholding certificate is used to transmit withholding certificates or other appropriate documentation for more than one person on whose behalf the nonqualified intermediary is acting, a withholding statement associated with the Form W–8 that provides all the information required by paragraph (e)(3)(iv) of this section; and

(D) Any other information, certifications, or statements as may be required by the form or accompanying instructions in addition to, or in lieu of, the information, certifications, and statements described in this paragraph (e)(3)(iii) or paragraph (e)(5)(iv) of this section.

(iv) *Withholding statement provided by nonqualified intermediary*—(A) *In general.* A nonqualified intermediary shall provide a withholding statement required by this paragraph (e)(3)(iv) to the extent the nonqualified intermediary is required to furnish, or does furnish, documentation for payees on whose behalf it receives reportable amounts (as defined in paragraph (e)(3)(vi) of this section) or to the extent it otherwise provides the documentation of such payees to a withholding agent. A nonqualified intermediary is not required to disclose information regarding persons for whom it collects reportable amounts unless it has actual knowledge that any such person is a U.S. non-exempt recipient as defined in paragraph (c)(21) of this section. Information regarding U.S. non-exempt recipients required under this paragraph (e)(3)(iv) must be provided irrespective of any requirement under foreign law that prohibits the disclosure of the identity of an account holder of a nonqualified intermediary or financial information relating to such account holder. Although a nonqualified intermediary is not required to provide documentation and other information required by this paragraph (e)(3)(iv) for persons other than U.S. non-exempt recipients, a withholding agent that does not receive documentation and such information must apply the presumption rules of paragraph (b) of this section, §§ 1.1441–5(d) and (e)(6) and 1.6049–5(d) or the withholding agent shall be liable for tax, interest, and penalties. A withholding agent must apply the presumption rules even if it is not required under chapter 61 of the Internal Revenue Code to obtain documentation to treat a payee as an exempt recipient and even though it has actual knowledge that the payee is a U.S. person. For example, if a nonqualified intermediary fails to provide a withholding agent with a Form W–9 for an account holder that is a U.S. exempt recipient, the withholding agent must presume (even if it has actual knowledge that the account holder is a U.S. exempt recipient), that the account holder is an undocumented foreign person with respect to amounts subject to withholding. See paragraph (b)(3)(v) of this section for applicable presumptions. Therefore, the withholding agent must withhold 30 percent from the payment even though if a Form W–9 had been provided, no withholding or reporting on the payment attributable to a U.S. exempt recipient would apply. Further, a nonqualified intermediary that fails to provide the documentation and the information under this paragraph (e)(3)(iv) for another withholding agent to report the payments on Forms 1042–S and Forms 1099 is not relieved of its responsibility

to file information returns. See paragraph (b)(6) of this section. Therefore, unless the nonqualified intermediary itself files such returns and provides copies to the payees, it shall be liable for penalties under sections 6721 (failure to file information returns), and 6722 (failure to furnish payee statements), including the penalties under those sections for intentional failure to file information returns. In addition, failure to provide either the documentation or the information required by this paragraph (e)(3)(iv) results in a payment not being reliably associated with valid documentation. Therefore, the beneficial owners of the payment are not entitled to reduced rates of withholding and if the full amount required to be held under the presumption rules is not withheld by the withholding agent, the nonqualified intermediary must withhold the difference between the amount withheld by the withholding agent and the amount required to be withheld. Failure to withhold shall result in the nonqualified intermediary being liable for tax under section 1461, interest, and penalties, including penalties under section 6656 (failure to deposit) and section 6672 (failure to collect and pay over tax).

(B) *General requirements.* A withholding statement must be provided prior to the payment of a reportable amount and must contain the information specified in paragraph (e)(3)(iv)(C) of this section. The statement must be updated as often as required to keep the information in the withholding statement correct prior to each subsequent payment. The withholding statement forms an integral part of the withholding certificate provided under paragraph (e)(3)(iii) of this section, and the penalties of perjury statement provided on the withholding certificate shall apply to the withholding statement. The withholding statement may be provided in any manner the nonqualified intermediary and the withholding agent mutually agree, including electronically. If the withholding statement is provided electronically, there must be sufficient safeguards to ensure that the information received by the withholding agent is the information sent by the nonqualified intermediary and all occasions of user access that result in the submission or modification of the withholding statement information must be recorded. In addition, an electronic system must be capable of providing a hard copy of all withholding statements provided by the nonqualified intermediary. A withholding agent will be liable for tax, interest, and penalties in accordance with paragraph (b)(7) of this section to the extent it does not follow the presumption rules of paragraph (b)(3) of this section or §§ 1.1441–5(d) and (e)(6), and 1.6049–5(d) for any payment of a reportable amount, or portion thereof, for which it does not have a valid withholding statement prior to making a payment.

(C) *Content of withholding statement.* The withholding statement provided by a nonqualified intermediary must contain the information required by this paragraph (e)(3)(iv)(C).

(*1*) The withholding statement must contain the name, address, TIN (if any) and the type of documentation (documentary evidence, Form W–9, or type of Form W–8) for every person from whom documentation has been received by the nonqualified intermediary and provided to the withholding agent and whether that person is a U.S. exempt recipient, a U.S. non-exempt recipient, or a foreign person. See paragraphs (c)(2), (20), and (21) of this section for the definitions of foreign person, U.S. exempt recipient, and U.S. non-exempt recipient. In the case of a foreign person, the statement must indicate whether the foreign person is a beneficial owner or an intermediary, flow-through entity, or U.S. branch described in paragraph (b)(2)(iv) of this section and include the type of recipient, based on recipient codes used for filing Forms 1042–S, if the foreign person is a recipient as defined in § 1.1461–1(c)(1)(ii).

(*2*) The withholding statement must allocate each payment, by income type, to every payee (including U.S. exempt recipients) for whom documentation has been provided. Any payment that cannot be reliably associated with valid documentation from a payee shall be treated as made to an unknown payee in accordance with the presumption rules of paragraph (b) of this section and §§ 1.1441–5(d) and (e)(6)

and 1.6049–5(d). For this purpose, a type of income is determined by the types of income required to be reported on Forms 1042–S or 1099, as appropriate. Notwithstanding the preceding sentence, deposit interest (including original issue discount) described in section 871(i)(2)(A) or 881(d) and interest or original issue discount on short-term obligations as described in section 871(g)(1)(B) or 881(e) is only required to be allocated to the extent it is required to be reported on Form 1099 or Form 1042–S. See § 1.6049–8 (regarding reporting of bank deposit interest to certain foreign persons). If a payee receives income through another nonqualified intermediary, flow-through entity, or U.S. branch described in paragraph (e)(2)(iv) of this section (other than a U.S. branch treated as a U.S. person), the withholding statement must also state, with respect to the payee, the name, address, and TIN, if known, of the other nonqualified intermediary or U.S. branch from which the payee directly receives the payment or the flow-through entity in which the payee has a direct ownership interest. If another nonqualified intermediary, flow-through entity, or U.S. branch fails to allocate a payment, the name of the nonqualified intermediary, flow-through entity, or U.S. branch that failed to allocate the payment shall be provided with respect to such payment.

(*3*) If a payee is identified as a foreign person, the nonqualified intermediary must specify the rate of withholding to which the payee is subject, the payee's country of residence and, if a reduced rate of withholding is claimed, the basis for that reduced rate (e.g., treaty benefit, portfolio interest, exempt under section 501(c)(3), 892, or 895). The allocation statement must also include the taxpayer identification numbers of those foreign persons for whom such a number is required under paragraph (e)(4)(vii) of this section or § 1.1441–6(b)(1) (regarding claims for treaty benefits). In the case of a claim of treaty benefits, the nonqualified intermediary's withholding statement must also state whether the limitation on benefits and section 894 statements required by § 1.1441–6(c)(5) have been provided, if required, in the beneficial owner's Form W–8 or associated with such owner's documentary evidence.

(*4*) The withholding statement must also contain any other information the withholding agent reasonably requests in order to fulfill its obligations under chapter 3, chapter 61 of the Internal Revenue Code, and section 3406.

(D) *Alternative procedures*—(*1*) *In general.* Under the alternative procedures of this paragraph (e)(3)(iv)(D), a nonqualified intermediary may provide information allocating a payment of a reportable amount to each payee (including U.S. exempt recipients) otherwise required under paragraph (e)(3)(iv)(B)(*2*) of this section after a payment is made. To use the alternative procedure of this paragraph (e)(3)(iv)(D), the nonqualified intermediary must inform the withholding agent on a statement associated with its nonqualified intermediary withholding certificate that it is using the procedure under this paragraph (e)(3)(iv)(D) and the withholding agent must agree to the procedure. If the requirements of the alternative procedure are met, a withholding agent, including the nonqualified intermediary using the procedures, can treat the payment as reliably associated with documentation and, therefore, the presumption rules of paragraph (b)(3) of this section and §§ 1.1441–5(d) and (e)(6) and 1.6049–5(d) do not apply even though information allocating the payment to each payee has not been received prior to the payment. See paragraph (e)(3)(iv)(D)(*7*) of this section, however, for a nonqualified intermediary's liability for tax and penalties if the requirements of this paragraph (e)(3)(iv)(D) are not met. These alternative procedures shall not be used for payments that are allocable to U.S. non-exempt recipients. Therefore, a nonqualified intermediary is required to provide a withholding agent with information allocating payments of reportable amounts to U.S. non-exempt recipients prior to the payment being made by the withholding agent.

(*2*) *Withholding rate pools.* In place of the information required in paragraph (e)(3)(iv)(C)(*2*) of this section allocating payments to each payee, the nonqualified intermediary must provide a withholding agent with withholding

rate pool information prior to the payment of a reportable amount. The withholding statement must contain all other information required by paragraph (e)(3)(iv)(C) of this section. Further, each payee listed in the withholding statement must be assigned to an identified withholding rate pool. To the extent a nonqualified intermediary is required to, or does provide, documentation, the alternative procedures do not relieve the nonqualified intermediary from the requirement to provide documentation prior to the payment being made. Therefore, withholding certificates or other appropriate documentation and all information required by paragraph (e)(3)(iv)(C) of this section (other than allocation information) must be provided to a withholding agent before any new payee receives a reportable amount. In addition, the withholding statement must be updated by assigning a new payee to a withholding rate pool prior to the payment of a reportable amount. A withholding rate pool is a payment of a single type of income, determined in accordance with the categories of income used to file Form 1042–S, that is subject to a single rate of withholding. A withholding rate pool may be established by any reasonable method to which the nonqualified intermediary and a withholding agent agree (*e.g.*, by establishing a separate account for a single withholding rate pool, or by dividing a payment made to a single account into portions allocable to each withholding rate pool). The nonqualified intermediary shall determine withholding rate pools based on valid documentation or, to the extent a payment cannot be reliably associated with valid documentation, the presumption rules of paragraph (b)(3) of this section and §§ 1.1441–5(d) and (e)(6) and 1.6049–5(d).

(*3*) *Allocation information*. The nonqualified intermediary must provide the withholding agent with sufficient information to allocate the income in each withholding rate pool to each payee (including U.S. exempt recipients) within the pool no later than January 31 of the year following the year of payment. Any payments that are not allocated to payees for whom documentation has been provided shall be allocated to an undocumented payee in accordance with the presumption rules of paragraph (b)(3) of this section and §§ 1.1441–5(d) and (e)(6) and 1.6049–5(d). Notwithstanding the preceding sentence, deposit interest (including original issue discount) described in section 871(i)(2)(A) or 881(d) and interest or original issue discount on short-term obligations as described in section 871(g)(1)(B) or 881(e) is not required to be allocated to a U.S. exempt recipient or a foreign payee, except as required under § 1.6049–8 (regarding reporting of deposit interest paid to certain foreign persons).

(*4*) *Failure to provide allocation information*. If a nonqualified intermediary fails to provide allocation information, if required, by January 31 for any withholding rate pool, a withholding agent shall not apply the alternative procedures of this paragraph (e)(3)(iv)(D) to any payments of reportable amounts paid after January 31 in the taxable year following the calendar year for which allocation information was not given and any subsequent taxable year. Further, the alternative procedures shall be unavailable for any other withholding rate pool even though allocation information was given for that other pool. Therefore, the withholding agent must withhold on a payment of a reportable amount in accordance with the presumption rules of paragraph (b)(3) of this section, and §§ 1.1441–5(d) and (e)(6) and 1.6049–5(d), unless the nonqualified intermediary provides all of the information, including information sufficient to allocate the payment to each specific payee, required by paragraph (e)(3)(iv)(A) through (C) of this section prior to the payment. A nonqualified intermediary must allocate at least 90 percent of the income required to be allocated for each withholding rate pool or the nonqualified intermediary will be treated as having failed to provide allocation information for purposes of this paragraph (e)(3)(iv)(D). See paragraph (e)(3)(iv)(D)(7) of this section for liability for tax and penalties if a nonqualified intermediary fails to provide allocation information in whole or in part.

(*5*) *Cure provision*. A nonqualified intermediary may cure any failure to

provide allocation information by providing the required allocation information to the withholding agent no later than February 14 following the calendar year of payment. If the withholding agent receives the allocation information by that date, it may apply the adjustment procedures of § 1.1461–2 to any excess withholding for payments made on or after February 1 and on or before February 14. Any nonqualified intermediary that fails to cure by February 14, may request the ability to use the alternative procedures of this paragraph (e)(3)(iv)(D) by submitting a request, in writing, to the Assistant Commissioner (International). The request must state the reason that the nonqualified intermediary did not comply with the alternative procedures of this paragraph (e)(3)(iv)(D) and steps that the nonqualified intermediary has taken, or will take, to ensure that no failures occur in the future. If the Assistant Commissioner (International) determines that the alternative procedures of this paragraph (e)(3)(iv)(D) may apply, a determination to that effect will be issued by the IRS to the nonqualified intermediary.

(*6*) *Form 1042–S reporting in case of allocation failure.* If a nonqualified intermediary fails to provide allocation information by February 14 following the year of payment for a withholding rate pool, the withholding agent must file Forms 1042-S for payments made to each payee in that pool (other than U.S. exempt recipients) in the prior calendar year by pro rating the payment to each payee (including U.S. exempt recipients) listed in the withholding statement for that withholding rate pool. If the nonqualified intermediary fails to allocate10 percent or less of an amount required to be allocated for a withholding rate pool, a withholding agent shall report the unallocated amount as paid to a single unknown payee in accordance with the presumption rules of paragraph (b) of this section and §§ 1.1441–5(d) and (e)(6) and 1.6049–5(d). The portion of the payment that can be allocated to specific recipients, as defined in § 1.1461–1(c)(1)(ii), shall be reported to each recipient in accordance with the rules of § 1.1461–1(c).

(*7*) *Liability for tax, interest, and penalties.* If a nonqualified intermediary fails to provide allocation information by February 14 following the year of payment for all or a portion of the payments made to any withholding rate pool, the withholding agent from whom the nonqualified intermediary received payments of reportable amounts shall not be liable for any tax, interest, or penalties, due solely to the errors or omissions of the nonqualified intermediary. See § 1.1441–7(b)(2) through (10) for the due diligence requirements of a withholding agent. Because failure by the nonqualified intermediary to provide allocation information results in a payment not being reliably associated with valid documentation, the beneficial owners for whom the nonqualified intermediary acts are not entitled to a reduced rate of withholding. Therefore, the nonqualified intermediary, as a withholding agent, shall be liable for any tax not withheld by the withholding agent in accordance with the presumption rules, interest on the under withheld tax if the nonqualified intermediary fails to pay the tax timely, and any applicable penalties, including the penalties under sections 6656 (failure to deposit), 6721 (failure to file information returns) and 6722 (failure to file payee statements). Failure to provide allocation information for more than 10 percent of the payments made to a particular withholding rate pool will be presumed to be an intentional failure within the meaning of sections 6721(e) and 6722(c). The nonqualified intermediary may rebut the presumption.

(*8*) *Applicability to flow-through entities and certain U.S. branches.* See paragraph (e)(3)(v) of this section and § 1.1441–5(c)(3)(iv) and (e)(5)(iv) for the applicability of this paragraph (e)(3)(iv) to U.S. branches described in paragraph (b)(2)(iv) of this section (other than U.S. branches treated as U.S. persons) and flow-through entities.

(E) *Notice procedures.* The IRS may notify a withholding agent that the alternative procedures of paragraph (e)(3)(iv)(D) of this section are not applicable to a specified nonqualified intermediary, a U.S. branch described in paragraph (b)(2)(iv) of this section,

or a flow-through entity. If a withholding agent receives such a notice, it must commence withholding in accordance with the presumption rules of paragraph (b)(3) of this section and §§ 1.1441–5(d) and (e)(6) and 1.6049–5(d) unless the nonqualified intermediary, U.S. branch, or flow-through entity complies with the procedures in paragraphs (e)(3)(iv)(A) through (C) of this section. In addition, the IRS may notify a withholding agent, in appropriate circumstances, that it must apply the presumption rules of paragraph (b)(3) of this section and §§ 1.1441–5(d) and (e)(6) and 1.6049–5(d) to payments made to a nonqualified intermediary, a U.S. branch, or a flow-through entity even if the nonqualified intermediary, U.S. branch or flow-through entity provides allocation information prior to the payment. A withholding agent that receives a notice under this paragraph (e)(3)(iv)(E) must commence withholding in accordance with the presumption rules within 30 days of the date of the notice. The IRS may withdraw its prohibition against using the alternative procedures of paragraph (e)(3)(iv)(D) of this section, or its requirement to follow the presumption rules, if the nonqualified intermediary, U.S. branch, or flow-through entity can demonstrate to the satisfaction of the Assistant Commissioner (International) or his delegate that it is capable of complying with the rules under chapter 3 of the Internal Revenue Code and any other conditions required by the Assistant Commissioner (International).

(v) *Withholding certificate from certain U.S. branches.* A U.S. branch certificate is a withholding certificate provided by a U.S. branch described in paragraph (b)(2)(iv) of this section that is not the beneficial owner of the income. The withholding certificate is provided with respect to reportable amounts and must state that such amounts are not effectively connected with the conduct of a trade or business in the United States. The withholding certificate must either transmit the appropriate documentation for the persons for whom the branch receives the payment (i.e., as an intermediary) or be provided as evidence of its agreement with the withholding agent to be treated as a U.S. person with respect to any payment associated with the certificate. A U.S. branch withholding certificate is valid only if it is furnished on a Form W–8, an acceptable substitute form, or such other form as the IRS may prescribe, it is signed under penalties of perjury by a person authorized to sign for the branch, its validity has not expired, and it contains the information, statements, and certifications described in this paragraph (e)(3)(v). If the certificate is furnished to transmit withholding certificates and other documentation, it must contain the information, certifications, and statements described in paragraphs (e)(3)(v)(A) through (C) of this section and in paragraphs (e)(3)(iii) and (iv) (alternative procedures) of this section, applying the term *U.S. branch* instead of the term *nonqualified intermediary*. If the certificate is furnished pursuant to an agreement to treat the U.S. branch as a U.S. person, the information and certifications required on the withholding certificate are limited to the following—

(A) The name of the person of which the branch is a part and the address of the branch in the United States;

(B) A certification that the payments associated with the certificate are not effectively connected with the conduct of its trade or business in the United States; and

(C) Any other information, certifications, or statements as may be required by the form or accompanying instructions in addition to, or in lieu of, the information and certification described in this paragraph (e)(3)(v).

(vi) *Reportable amounts.* For purposes of chapter 3 of the Internal Revenue Code, a nonqualified intermediary, qualified intermediary, flow-through entity, and U.S. branch described in paragraph (b)(2)(iv) of this section (other than a U.S. branch that agrees to be treated as a U.S. person) must provide a withholding certificate and associated documentation and other information with respect to reportable amounts. For purposes of the regulations under chapter 3 of the Internal Revenue Code, the term reportable amount means an amount subject to withholding within the meaning of

§ 1.1441–2(a), bank deposit interest (including original issue discount) and similar types of deposit interest described in section 871(i)(2)(A) or 881(d) that are from sources within the United States, and any amount of interest or original issue discount from sources within the United States on the redemption of certain short-term obligations described in section 871(g)(1)(B) or 881(e). Reportable amounts shall not include amounts received on the sale or exchange (other than a redemption) of an obligation described in section 871(g)(1)(B) or 881(e) that is effected at an office outside the United States. See § 1.6045–1(g)(3) to determine whether a sale is effected at an office outside the United States. Reportable amounts also do not include payments with respect to deposits with banks and other financial institutions that remain on deposit for a period of two weeks or less, to amounts of original issue discount arising from a sale and repurchase transaction that is completed within a period of two weeks or less, or to amounts described in § 1.6049–5(b)(7), (10) or (11) (relating to certain obligations issued in bearer form). While short-term OID and bank deposit interest are not subject to withholding under chapter 3 of the Internal Revenue Code, such amounts may be subject to information reporting under section 6049 if paid to a U.S. person who is not an exempt recipient described in § 1.6049–4(c)(1)(ii) and to backup withholding under section 3406 in the absence of documentation. See § 1.6049–5(d)(3)(iii) for applicable procedures when such amounts are paid to a foreign intermediary.

(4) *Applicable rules.* The provisions in this paragraph (e)(4) describe procedures applicable to withholding certificates on Form W–8 or Form 8233 (or a substitute form) or documentary evidence furnished to establish foreign status. These provisions do not apply to Forms W–9 (or their substitutes). For corresponding provisions regrading Form W–9 (or a substitute form), see section 3406 and the regulations under that section.

(i) *Who may sign the certificate.* A withholding certificate (or other acceptable substitute) may be signed by any person authorized to sign a declaration under penalties of perjury on behalf of the person whose name is on the certificate as provided in section 6061 and the regulations under that section (relating to who may sign generally for an individual, estate, or trust, which includes certain agents who may sign returns and other documents), section 6062 and the regulations under that section (relating to who may sign corporate returns), and section 6063 and the regulations under that section (relating to who may sign partnership returns).

(ii) *Period of validity*—(A) *Three-year period.* A withholding certificate described in paragraph (e)(2)(i) of this section, or a certificate described in § 1.871–14(c)(2)(v) (furnished to qualify interest as portfolio interest for purposes of sections 871(h) and 881(c)), shall remain valid until the earlier of the last day of the third calendar year following the year in which the withholding certificate is signed or the day that a change in circumstances occurs that makes any information on the certificate incorrect. For example, a withholding certificate signed on September 30, 2001, remains valid through December 31, 2004, unless circumstances change that make the information on the form no longer correct. Documentary evidence described in §§ 1.1441–6(c)(3) or (4) or 1.6049–5(c)(1) shall remain valid until the earlier of the last day of the third calendar year following the year in which the documentary evidence is provided to the withholding agent or the day that a change in circumstances occurs that makes any information on the documentary evidence incorrect.

(B) *Indefinite validity period.* Notwithstanding paragraph (e)(4)(ii)(A) of this section, the following certificates or parts of certificates shall remain valid until the status of the person whose name is on the certificate is changed in a way relevant to the certificate or circumstances change that make the information on the certificate no longer correct:

(*1*) A withholding certificate described in paragraph (e)(2)(ii) of this section that is furnished with a TIN, provided that the withholding agent reports at least one payment annually to the beneficial owner under § 1.1461–1(c)

or the TIN furnished on the certificate is reported to the IRS under the procedures described in §1.1461–1(d). For example, assume a withholding agent receives a Form W–8 in 2001 from a beneficial owner with respect to an account that contains bonds, the interest on which must be reported on Form 1042–S under §1.1461–1(c). The Form W–8 contains a valid TIN and the withholding agent reports on Forms 1042–S interest to the beneficial owner for 2001 through 2005. In 2005, the beneficial owner sells some of the bonds. For purposes of the exemption from Form 1099 reporting under §1.6045–1(g), the withholding agent may consider the Form W–8 as valid, even though the payment of the sales proceeds is not reportable on Form 1042–S under §1.1461–1(c) and even though the Form W–8 was provided more than three years previously.

(*2*) A certificate described in paragraph (e)(3)(ii) of this section (a qualified intermediary withholding certificate) but not including the withholding certificates, documentary evidence, statements or other information associated with the certificate.

(*3*) A certificate described in paragraph (e)(3)(iii) of this section (a nonqualified intermediary certificate), but not including the withholding certificates, documentary evidence, statements or other information associated with the certificate.

(*4*) A certificate described in paragraph (e)(3)(v) of this section (a U.S. branch withholding certificate), but not including the withholding certificates, documentary evidence, statements or other information associated with the certificate.

(*5*) A certificate described in §1.1441–5(c)(2)(iv) (dealing with a certificate from a person representing to be a withholding foreign partnership).

(*6*) A certificate described in §1.1441–5(c)(3)(iii) (a withholding certificate from a nonwithholding foreign partnership) but not including the withholding certificates, documentary evidence, statements or other information required to be associated with the certificate.

(*7*) A certificate furnished by a person representing to be an integral part of a foreign government (within the meaning of §1.892–2T(a)(2)) in accordance with §1.1441–8(b), or by a person representing to be a foreign central bank of issue (within the meaning of §1.861–2(b)(4)) or the Bank for International Settlements in accordance with §1.1441–8(c)(1).

(*8*) A withholding certificate described in §1.1441–5(e)(5)(iii) provided by a foreign simple trust or a foreign grantor trust to transmit documentation of beneficiaries or owners, but not including the withholding certificates, documentary evidence, statements or other information associated with the certificate.

(C) *Withholding certificate for effectively connected income.* Notwithstanding paragraph (e)(4)(ii)(B)(*1*) of this section, the period of validity of a withholding certificate furnished to a withholding agent to claim a reduced rate of withholding for income that is effectively connected with the conduct of a trade or business within the United States shall be limited to the three-year period described in paragraph (e)(4)(ii)(A) of this section.

(D) *Change in circumstances.* If a change in circumstances makes any information on a certificate or other documentation incorrect, then the person whose name is on the certificate or other documentation must inform the withholding agent within 30 days of the change and furnish a new certificate or new documentation. A certificate or documentation becomes invalid from the date that the withholding agent holding the certificate or documentation knows or has reason to know that circumstances affecting the correctness of the certificate or documentation have changed. However, a withholding agent may choose to apply the provisions of paragraph (b)(3)(iv) of this section regarding the 90-day grace period as of that date while awaiting a new certificate or documentation or while seeking information regarding changes, or suspected changes, in the person's circumstances. If an intermediary (including a U.S. branch described in paragraph (b)(2)(iv)(A) of this section that passes through certificates to a withholding agent) or a flow-through entity becomes aware that a certificate or other appropriate documentation it has furnished to the

person from whom it collects the payment is no longer valid because of a change in the circumstances of the person who issued the certificate or furnished the other appropriate documentation, then the intermediary or flow-through entity must notify the person from whom it collects the payment of the change of circumstances. It must also obtain a new withholding certificate or new appropriate documentation to replace the existing certificate or documentation whose validity has expired due to the change in circumstances. If a beneficial owner withholding certificate is used to claim foreign status only (and not, also, residence in a particular foreign country for purposes of an income tax treaty), a change of address is a change in circumstances for purposes of this paragraph (e)(4)(ii)(D) only if it changes to an address in the United States. Further, a change of address within the same foreign country is not a change in circumstances for purposes of this paragraph (e)(4)(ii)(D). A change in the circumstances affecting the withholding information provided to the withholding agent in accordance with the provisions in paragraph (e) (3)(iv) or (5)(v) of this section or in § 1.1441–5(c)(3)(iv) shall terminate the validity of the withholding certificate with respect to the information that is no longer reliable unless the information is updated. A withholding agent may rely on a certificate without having to inquire into possible changes of circumstances that may affect the validity of the statement, unless it knows or has reason to know that circumstances have changed. A withholding agent may require a new certificate at any time prior to a payment, even though the withholding agent has no actual knowledge or reason to know that any information stated on the certificate has changed.

(iii) *Retention of withholding certificate.* A withholding agent must retain each withholding certificate and other documentation for as long as it may be relevant to the determination of the withholding agent's tax liability under section 1461 and § 1.1461–1.

(iv) *Electronic transmission of information*—(A) *In general.* A withholding agent may establish a system for a beneficial owner or payee to electronically furnish a Form W–8, an acceptable substitute Form W–8, or such other form as the Internal Revenue Service may prescribe. The system must meet the requirements described in paragraph (e)(4)(iv)(B) of this section. A withholding agent may accept Forms W–8 that are furnished electronically on or after January 1, 2000, provided the requirements of paragraph (e)(4)(iv)(B) of this section are met.

(B) *Requirements*—(*1*) *In general.* The electronic system must ensure that the information received is the information sent, and must document all occasions of user access that result in the submission renewal, or modification of a Form W–8. In addition, the design and operation of the electronic system, including access procedures, must make it reasonably certain that the person accessing the system and furnishing Form W–8 is the person named in the Form.

(*2*) *Same information as paper Form W–8.* The electronic transmission must provide the withholding agent or payor with exactly the same information as the paper Form W–8.

(*3*) *Perjury statement and signature requirements.* The electronic transmission must contain an electronic signature by the person whose name is on the Form W–8 and the signature must be under penalties of perjury in the manner described in this paragraph (e)(4)(iv)(B)(*3*).

(*i*) *Perjury statement.* The perjury statement must contain the language that appears on the paper Form W–8. The electronic system must inform the person whose name is on the Form W–8 that the person must make the declaration contained in the perjury statement and that the declaration is made by signing the Form W–8. The instructions and the language of the perjury statement must immediately follow the person's certifying statements and immediately precede the person's electronic signature.

(*ii*) *Electronic signature.* The act of the electronic signature must be effected by the person whose name is on the electronic Form W–8. The signature must also authenticate and verify the submission. For this purpose, the terms *authenticate* and *verify* have the

same meanings as they do when applied to a written signature on a paper Form W–8. An electronic signature can be in any form that satisfies the foregoing requirements. The electronic signature must be the final entry in the person's Form W–8 submission.

(*4*) *Requests for electronic Form W–8 data.* Upon request by the Internal Revenue Service during an examination, the withholding agent must supply a hard copy of the electronic Form W–8 and a statement that, to the best of the withholding agent's knowledge, the electronic Form W–8 was filed by the person whose name is on the form. The hard copy of the electronic Form W–8 must provide exactly the same information as, but need not be identical to, the paper Form W–8.

(C) *Special requirements for transmission of Forms W–8 by an intermediary.* [Reserved]

(v) *Electronic confirmation of taxpayer identifying number on withholding certificate.* The Commissioner may prescribe procedures in a revenue procedure (see § 601.601(d)(2) of this chapter) or other appropriate guidance to require a withholding agent to confirm electronically with the IRS information concerning any TIN stated on a withholding certificate.

(vi) *Acceptable substitute form.* A withholding agent may substitute its own form instead of an official Form W–8 or 8233 (or such other official form as the IRS may prescribe). Such a substitute for an official form will be acceptable if it contains provisions that are substantially similar to those of the official form, it contains the same certifications relevant to the transactions as are contained on the official form and these certifications are clearly set forth, and the substitute form includes a signature-under-penalties-of-perjury statement identical to the one stated on the official form. The substitute form is acceptable even if it does not contain all of the provisions contained on the official form, so long as it contains those provisions that are relevant to the transaction for which it is furnished. For example, a withholding agent that pays no income for which treaty benefits are claimed may develop a substitute form that is identical to the official form, except that it does not include information regarding claim of benefits under an income tax treaty. A withholding agent who uses a substitute form must furnish instructions relevant to the substitute form only to the extent and in the manner specified in the instructions to the official form. A withholding agent may refuse to accept a certificate from a payee or beneficial owner (including the official Form W–8 or 8233) if the certificate is not provided on the acceptable substitute form provided by the withholding agent. However, a withholding agent may refuse to accept a certificate provided by a payee or beneficial owner only if the withholding agent furnishes the payee or beneficial owner with an acceptable substitute form immediately upon receipt of an unacceptable form or within 5 business days of receipt of an unacceptable form from the payee or beneficial owner. In that case, the substitute form is acceptable only if it contains a notice that the withholding agent has refused to accept the form submitted by the payee or beneficial owner and that the payee or beneficial owner must submit the acceptable form provided by the withholding agent in order for the payee or beneficial owner to be treated as having furnished the required withholding certificate.

(vii) *Requirement of taxpayer identifying number.* A TIN must be stated on a withholding certificate when required by this paragraph (e)(4)(vii). A TIN is required to be stated on—

(A) A withholding certificate on which a beneficial owner is claiming the benefit of a reduced rate under an income tax treaty (other than for amounts described in § 1.1441–6(c)(2);

(B) A withholding certificate on which a beneficial owner is claiming exemption from withholding because income is effectively connected with a U.S. trade or business;

(C) A withholding certificate on which a beneficial owner is claiming exemption from withholding under section 871(f) for certain annuities received under qualified plans;

(D) A withholding certificate on which a beneficial owner is claiming an exemption based solely on a foreign organization's claim of tax exempt status

under section 501(c) or private foundation status (however, a TIN is not required from a foreign private foundation that is subject to the 4-percent tax under section 4948(a) on income if that income would be exempt from withholding but for section 4948(a) (e.g., portfolio interest));

(E) A withholding certificate from a person representing to be a qualified intermediary described in paragraph (e)(5)(ii) of this section;

(F) A withholding certificate from a person representing to be a withholding foreign partnership described in § 1.1441–5(c)(2)(i));

(G) A withholding certificate provided by a foreign organization that is described in section 501(c);

(H) A withholding certificate from a person representing to be a U.S. branch described in paragraph (b)(2)(iv) of this section.

(viii) *Reliance rules.* A withholding agent may rely on the information and certifications stated on withholding certificates or other documentation without having to inquire into the truthfulness of this information or certification, unless it has actual knowledge or reason to know that the same is untrue. In the case of amounts described in § 1.1441–6(c)(2), a withholding agent described in § 1.1441–7(b)(2)(ii) has reason to know that the information or certifications on a certificate are untrue only to the extent provided in § 1.1441–7(b)(2)(ii). See § 1.1441–6(b)(1) for reliance on representations regarding eligibility for a reduced rate under an income tax treaty. Paragraphs (e)(4)(viii) (A) and (B) of this section provide examples of such reliance.

(A) *Classification.* A withholding agent may rely on the claim of entity classification indicated on the withholding certificate that it receives from or for the beneficial owner, unless it has actual knowledge or reason to know that the classification claimed is incorrect. A withholding agent may not rely on a person's claim of classification other than as a corporation if the name of the corporation indicates that the person is a per se corporation described in § 301.7701–2(b)(8)(i) of this chapter unless the certificate contains a statement that the person is a grandfathered per se corporation described in § 301.7701–2(b)(8) of this chapter and that its grandfathered status has not been terminated. In the absence of reliable representation or information regarding the classification of the payee or beneficial owner, see § 1.1441–1(b)(3)(ii) for applicable presumptions.

(B) *Status of payee as an intermediary or as a person acting for its own account.* A withholding agent may rely on the type of certificate furnished as indicative of the payee's status as an intermediary or as an owner, unless the withholding agent has actual knowledge or reason to know otherwise. For example, a withholding agent that receives a beneficial owner withholding certificate from a foreign financial institution may treat the institution as the beneficial owner, unless it has information in its records that would indicate otherwise or the certificate contains information that is not consistent with beneficial owner status (e.g., sub-account numbers or names). If the financial institution also acts as an intermediary, the withholding agent may request that the institution furnish two certificates, i.e., a beneficial owner certificate described in paragraph (e)(2)(i) of this section for the amounts that it receives as a beneficial owner, and an intermediary withholding certificate described in paragraph (e)(3)(i) of this section for the amounts that it receives as an intermediary. In the absence of reliable representation or information regarding the status of the payee as an owner or as an intermediary, see paragraph (b)(3)(v)(A) for applicable presumptions.

(ix) *Certificates to be furnished for each account unless exception applies.* Unless otherwise provided in this paragraph (e)(4)(ix), a withholding agent that is a financial institution with which a customer may open an account shall obtain withholding certificates or other appropriate documentation on an account-by-account basis.

(A) *Coordinated account information system in effect.* A withholding agent may rely on the withholding certificate or other appropriate documentation furnished by a customer for a pre-existing account under any one or more of the circumstances described in this paragraph (e)(4)(ix)(A).

(*1*) A withholding agent may rely on documentation furnished by a customer for another account if all such accounts are held at the same branch location.

(*2*) A withholding agent may rely on documentation furnished by a customer for an account held at another branch location of the same withholding agent or at a branch location of a person related to the withholding agent if the withholding agent and the related person are part of a universal account system that uses a customer identifier that can be used to retrieve systematically all other accounts of the customer. See § 31.3406(c)(3)(ii) and (iii)(C) of this chapter for an identical procedure for purposes of backup withholding. For purposes of this paragraph (e)(4)(ix)(A), a withholding agent is related to another person if it is related within the meaning of section 267(b) or 707(b).

(*3*) A withholding agent may rely on documentation furnished by a customer for an account held at another branch location of the same withholding agent or at a branch location of a person related to the withholding agent if the withholding agent and the related person are part of an information system other than a universal account system and the information system is described in this paragraph (e)(4)(ix)(A)(*3*). The system must allow the withholding agent to easily access data regarding the nature of the documentation, the information contained in the documentation, and its validity status, and must allow the withholding agent to easily transmit data into the system regarding any facts of which it becomes aware that may affect the reliability of the documentation. The withholding agent must be able to establish how and when it has accessed the data regarding the documentation and, if applicable, how and when it has transmitted data regarding any facts of which it became aware that may affect the reliability of the documentation. In addition, the withholding agent or the related party must be able to establish that any data it has transmitted to the information system has been processed and appropriate due diligence has been exercised regarding the validity of the documentation.

(*4*) A withholding agent may rely on documentation furnished by a beneficial owner or payee to an agent of the withholding agent. The agent may retain the documentation as part of an information system maintained for a single or multiple withholding agents provided that the system permits any withholding agent that uses the system to easily access data regarding the nature of the documentation, the information contained in the documentation, and its validity, and must allow the withholding agent to easily transmit data into the system regarding any facts of which it becomes aware that may affect the reliability of the documentation. The withholding agent must be able to establish how and when it has accessed the data regarding the documentation and, if applicable, how and when it has transmitted data regarding any facts of which it became aware that may affect the reliability of the documentation. In addition, the withholding agent must be able to establish that any data it has transmitted to the information system has been processed and appropriate due diligence has been exercised regarding the validity of the documentation.

(B) *Family of mutual funds.* An interest in a mutual fund that has a common investment advisor or common principal underwriter with other mutual funds (within the same family of funds) may, in the discretion of the mutual fund, be represented by one single withholding certificate where shares are acquired or owned in any of the funds. See § 31.3406(h)–3(a)(2) of this chapter for an identical procedures for purposes of backup withholding.

(C) *Special rule for brokers*—(*1*) *In general.* A withholding agent may rely on the certification of a broker that the broker holds a valid beneficial owner withholding certificate described in paragraph (e)(2)(i) of this section or other appropriate documentation for that beneficial owner with respect to any readily tradable instrument, as defined in § 31.3406(h)–1(d) of this chapter, if the broker is a United States person (including a U.S. branch treated as a U.S. person under paragraph (b)(2)(iv) of this section) that is acting as the agent of a beneficial owner and the U.S. broker has been provided a valid

Form W–8 or other appropriate documentation. The certification must be in writing or in electronic form and contain all of the information required of a nonqualified intermediary under paragraphs (e)(3)(iv)(B) and (C) of this section. If a U.S. broker chooses to use this paragraph (e)(4)(ix)(C), that U.S. broker will be solely responsible for applying the rules of §1.1441–7(b) to the withholding certificates or other appropriate documentation. For purposes of this paragraph (c)(4)(ix)(C), the term broker means a person treated as a broker under §1.6045–1(a).

(*2*) The following example illustrates the rules of this paragraph (e)(4)(ix)(C):

Example. SCO is a U.S. securities clearing organization that provides clearing services for correspondent broker, CB, a U.S. corporation. Pursuant to a fully disclosed clearing agreement, CB fully discloses the identity of each of its customers to SCO. Part of SCO's clearing duties include the crediting of income and gross proceeds of readily tradeable instruments (as defined in §31.3406(h)–1(d)) to each customer's account. For each disclosed customer that is a foreign beneficial owner, CB provides SCO with information required under paragraphs (e)(3)(iv)(B) and (C) of this section that is necessary to apply the correct rate of withholding and to file Forms 1042–S. SCO may use the representations and beneficial owner information provided by CB to determine the proper amount of withholding and to file Forms 1042–S. CB is responsible for determining the validity of the withholding certificates or other appropriate documentation under §1.1441–1(b).

(5) *Qualified intermediaries*—(i) *General rule.* A qualified intermediary, as defined in paragraph (e)(5)(ii) of this section, may furnish a qualified intermediary withholding certificate to a withholding agent. The withholding certificate provides certifications on behalf of other persons for the purpose of claiming and verifying reduced rates of withholding under section 1441 or 1442 and for the purpose of reporting and withholding under other provisions of the Internal Revenue Code, such as the provisions under chapter 61 and section 3406 (and the regulations under those provisions). Furnishing such a certificate is in lieu of transmitting to a withholding agent withholding certificates or other appropriate documentation for the persons for whom the qualified intermediary receives the payment, including interest holders in a qualified intermediary that is fiscally transparent under the regulations under section 894. Although the qualified intermediary is required to obtain withholding certificates or other appropriate documentation from beneficial owners, payees, or interest holders pursuant to its agreement with the IRS, it is generally not required to attach such documentation to the intermediary withholding certificate. Notwithstanding the preceding sentence a qualified intermediary must provide a withholding agent with the Forms W–9, or disclose the names, addresses, and taxpayer identifying numbers, if known, of those U.S. non-exempt recipients for whom the qualified intermediary receives reportable amounts (within the meaning of paragraph (e)(3)(vi) of this section) to the extent required in the qualified intermediary's agreement with the IRS. A person may claim qualified intermediary status before an agreement is executed with the IRS if it has applied for such status and the IRS authorizes such status on an interim basis under such procedures as the IRS may prescribe.

(ii) *Definition of qualified intermediary.* With respect to a payment to a foreign person, the term *qualified intermediary* means a person that is a party to a withholding agreement with the IRS and such person is—

(A) A foreign financial institution or a foreign clearing organization (as defined in §1.163–5(c)(2)(i)(D)(*8*), without regard to the requirement that the organization hold obligations for members), other than a U.S. branch or U.S. office of such institution or organization;

(B) A foreign branch or office of a U.S. financial institution or a foreign branch or office of a U.S. clearing organization (as defined in §1.163–5(c)(2)(i)(D)(*8*), without regard to the requirement that the organization hold obligations for members);

(C) A foreign corporation for purposes of presenting claims of benefits under an income tax treaty on behalf of its shareholders; or

(D) Any other person acceptable to the IRS.

(iii) *Withholding agreement*—(A) *In general.* The IRS may, upon request,

enter into a withholding agreement with a foreign person described in paragraph (e)(5)(ii) of this section pursuant to such procedures as the IRS may prescribe in published guidance (see § 601.601(d)(2) of this chapter). Under the withholding agreement, a qualified intermediary shall generally be subject to the applicable withholding and reporting provisions applicable to withholding agents and payors under chapters 3 and 61 of the Internal Revenue Code, section 3406, the regulations under those provisions, and other withholding provisions of the Internal Revenue Code, except to the extent provided under the agreement.

(B) *Terms of the withholding agreement.* Generally, the agreement shall specify the type of certifications and documentation upon which the qualified intermediary may rely to ascertain the classification (e.g., corporation or partnership) and status (i.e., U.S. or foreign) of beneficial owners and payees who receive payments collected by the qualified intermediary and, if necessary, entitlement to the benefits of a reduced rate under an income tax treaty. The agreement shall specify if, and to what extent, the qualified intermediary may assume primary withholding responsibility in accordance with paragraph (e)(5)(iv) of this section. It shall also specify the extent to which applicable return filing and information reporting requirements are modified so that, in appropriate cases, the qualified intermediary may report payments to the IRS on an aggregated basis, without having to disclose the identity of beneficial owners and payees. However, the qualified intermediary may be required to provide to the IRS the name and address of those foreign customers who benefit from a reduced rate under an income tax treaty pursuant to the qualified intermediary arrangement for purposes of verifying entitlement to such benefits, particularly under an applicable limitation on benefits provision. Under the agreement, a qualified intermediary may agree to act as an acceptance agent to perform the duties described in § 301.6109–1(d)(3)(iv)(A) of this chapter. The agreement may specify the manner in which applicable procedures for adjustments for underwithholding and overwithholding, including refund procedures, apply in the context of a qualified intermediary arrangement and the extent to which applicable procedures may be modified. In particular, a withholding agreement may allow a qualified intermediary to claim refunds of overwithheld amounts. If relevant, the agreement shall specify the manner in which the qualified intermediary may deal with payments to other intermediaries and flow-through entities. In addition, the agreement shall specify the manner in which the IRS will verify compliance with the agreement. In appropriate cases, the IRS may agree to rely on audits performed by an intermediary's approved auditor. In such a case, the IRS's audit may be limited to the audit of the auditor's records (including work papers of the auditor and reports prepared by the auditor indicating the methodology employed to verify the entity's compliance with the agreement). For this purpose, the agreement shall specify the auditor or class of auditors that are approved. Generally, an auditor will not be approved if the auditor is not subject to laws, regulations, or rules that impose sanctions for failure to exercise its independence and to perform the audit competently. The agreement may include provisions for the assessment and collection of tax in the event that failure to comply with the terms of the agreement results in the failure by the withholding agent or the qualified intermediary to withhold and deposit the required amount of tax. Further, the agreement may specify the procedures by which deposits of amounts withheld are to be deposited, if different from the deposit procedures under the Internal Revenue Code and applicable regulations. To determine whether to enter a qualified intermediary withholding agreement and the terms of any particular withholding agreement, the IRS will consider appropriate factors including whether or not the foreign person agrees to assume primary withholding responsibility, the type of local know-your-customer laws and practices to which it is subject, the extent and nature of supervisory and regulatory control exercised under the laws of the foreign country over the foreign person,

the volume of investments in U.S. securities (determined in dollar amounts and number of account holders), the financial condition of the foreign person, and whether the qualified intermediary is a resident of a country with which the United States has an income tax treaty.

(iv) *Assignment of primary withholding responsibility*. Any person who meets the definition of a withholding agent under §1.1441–7(a) (whether a U.S. person or a foreign person) is required to withhold and deposit any amount withheld under §1.1461–1(a) and to make the returns prescribed by §1.1461–1(b) and (c). If permitted by its qualified intermediary agreement, a qualified intermediary agreement may, however, inform a withholding agent from which it receives a payment that it will assume the primary obligation to withhold, deposit, and report amounts under chapter 3 of the Internal Revenue Code and/or under chapter 61 of the Internal Revenue Code and section 3406. If a withholding agent makes a payment of an amount subject to withholding, as defined in §1.1441–2(a), or a reportable payment, as defined in section 3406(b), to a qualified intermediary that represents to the withholding agent that it has assumed primary withholding responsibility for the payment, the withholding agent is not required to withhold on the payment. The withholding agent is not required to determine that the qualified intermediary agreement actually permits the qualified intermediary to assume primary withholding responsibility. A qualified intermediary that assumes primary withholding responsibility under chapter 3 of the Internal Revenue Code or primary reporting and backup withholding responsibility under chapter 61 and section 3406 is not required to assume primary withholding responsibility for all accounts it has with a withholding agent but must assume primary withholding responsibility for all payments made to any one account that it has with the withholding agent. A qualified intermediary may agree with the withholding agent to assume primary withholding responsibility under chapter 3 and section 3406, only if expressly permitted to do so under its agreement with the IRS.

(v) *Withholding statement*—(A) *In general.* A qualified intermediary must provide each withholding agent from which it receives reportable amounts, as defined in paragraph (e)(3)(vi) of this section, as a qualified intermediary with a written statement (the withholding statement) containing the information specified in paragraph (e)(5)(v)(B) of this section. A withholding statement is not required, however, if all of the information a withholding agent needs to fulfill its withholding and reporting requirements is contained in the withholding certificate. The qualified intermediary agreement may require, in appropriate circumstances, the qualified intermediary to include information in its withholding statement relating to payments other than payments of reportable amounts. The withholding statement forms an integral part of the qualified intermediary's qualified intermediary withholding certificate and the penalties of perjury statement provided on the withholding certificate shall apply to the withholding statement as well. The withholding statement may be provided in any manner, and in any form, to which qualified intermediary and the withholding agent mutually agree, including electronically. If the withholding statement is provided electronically, there must be sufficient safeguards to ensure that the information received by the withholding agent is the information sent by qualified intermediary and must also document all occasions of user access that result in the submission or modification of withholding statement information. In addition, the electronic system must be capable of providing a hard copy of all withholding statements provided by the qualified intermediary. The withholding statement shall be updated as often as necessary for the withholding agent to meet its reporting and withholding obligations under chapters 3 and 61 of the Internal Revenue Code and section 3406. A withholding agent will be liable for tax, interest, and penalties in accordance with paragraph (b)(7) of this section to the extent it does not follow the presumption rules of paragraph (b)(3) of this section, §§1.1441–5(d) and (e)(6), and 1.6049–5(d)

for any payment, or portion thereof, for which it does not have a valid withholding statement prior to making a payment.

(B) *Content of withholding statement.* The withholding statement must contain sufficient information for a withholding agent to apply the correct rate of withholding on payments from the accounts identified on the statement and to properly report such payments on Forms 1042–S and Forms 1099, as applicable. The withholding statement must—

(*1*) Designate those accounts for which the qualified intermediary acts as a qualified intermediary;

(*2*) Designate those accounts for which qualified intermediary assumes primary withholding responsibility under chapter 3 of the Internal Revenue Code and/or primary reporting and backup withholding responsibility under chapter 61 and section 3406; and

(*3*) Provide information regarding withholding rate pools, as described in paragraph (e)(5)(v)(C) of this section.

(C) *Withholding rate pools*—(*1*) *In general.* Except to the extent it has assumed both primary withholding responsibility under chapter 3 of the Internal Revenue Code and primary reporting and backup withholding responsibility under chapter 61 and section 3406 with respect to a payment, a qualified intermediary shall provide as part of its withholding statement the withholding rate pool information that is required for the withholding agent to meet its withholding and reporting obligations under chapters 3 and 61 of the Internal Revenue Code and section 3406. A withholding rate pool is a payment of a single type of income, determined in accordance with the categories of income reported on Form 1042–S or Form 1099, as applicable, that is subject to a single rate of withholding. A withholding rate pool may be established by any reasonable method on which the qualified intermediary and a withholding agent agree (*e.g.*, by establishing a separate account for a single withholding rate pool, or by dividing a payment made to a single account into portions allocable to each withholding rate pool). To the extent a qualified intermediary does not assume primary reporting and backup withholding responsibility under chapter 61 and section 3406, a qualified intermediary's withholding statement must establish a separate withholding rate pool for each U.S. non-exempt recipient account holder that the qualified intermediary has disclosed to the withholding agent unless the qualified intermediary uses the alternative procedures in paragraph (e)(5)(v)(C)(*2*) of this section. A qualified intermediary shall determine withholding rate pools based on valid documentation that it obtains under its withholding agreement with the IRS, or if a payment cannot be reliably associated with valid documentation, under the applicable presumption rules. If a qualified intermediary has an account holder that is another intermediary (whether a qualified intermediary or a non-qualified intermediary) or a flow-through entity, the qualified intermediary may combine the account holder information provided by the intermediary or flow-through entity with the qualified intermediary's direct account holder information to determine the qualified intermediary's withholding rate pools.

(*2*) *Alternative procedure for U.S. non-exempt recipients.* If permitted under its agreement with the IRS, a qualified intermediary may, by mutual agreement with a withholding agent, establish a single zero withholding rate pool that includes U.S. non-exempt recipient account holders for whom the qualified intermediary has provided Forms W–9 prior to the withholding agent paying any reportable payments, as defined in the qualified intermediary agreement, and a separate withholding rate pool (subject to 31-percent withholding) that includes only U.S. non-exempt recipient account holders for whom a qualified intermediary has not provided Forms W–9 prior to the withholding agent paying any reportable payments. If a qualified intermediary chooses the alternative procedure of this paragraph (e)(5)(v)(C)(*2*), the qualified intermediary must provide the information required by its qualified intermediary agreement to the withholding agent no later than January 15 of the year following the year in which the payments

are paid. Failure to provide such information will result in the application of penalties to the qualified intermediary under sections 6721 and 6722, as well as any other applicable penalties, and may result in the termination of the qualified intermediary's withholding agreement with the IRS. A withholding agent shall not be liable for tax, interest, or penalties for failure to backup withhold or report information under chapter 61 of the Internal Revenue Code due solely to the errors or omissions of the qualified intermediary. If a qualified intermediary fails to provide the allocation information required by this paragraph (e)(5)(v)(C)(*2*), with respect to U.S. non-exempt recipients, the withholding agent shall report the unallocated amount paid from the withholding rate pool to an unknown recipient, or otherwise in accordance with the appropriate Form 1099 and the instructions accompanying the form.

(f) *Effective date*—(1) *In general.* This section applies to payments made after December 31, 2000.

(2) *Transition rules*—(i) *Special rules for existing documentation.* For purposes of paragraphs (d)(3) and (e)(2)(i) of this section, the validity of a withholding certificate (namely, Form W–8, 8233, 1001, 4224, or 1078 , or a statement described in §1.1441–5 in effect prior to January 1, 2001 (see §1.1441–5 as contained in 26 CFR part 1, revised April 1, 1999)) that was valid on January 1, 1998 under the regulations in effect prior to January 1, 2001 (see 26 CFR parts 1 and 35a, revised April 1, 1999) and expired, or will expire, at any time during 1998, is extended until December 31, 1998. The validity of a withholding certificate that is valid on or after January 1, 1999, remains valid until its validity expires under the regulations in effect prior to January 1, 2001 (see 26 CFR parts 1 and 35a, revised April 1, 1999) but in no event will such withholding certificate remain valid after December 31, 2000. The rule in this paragraph (f)(2)(i), however, does not apply to extend the validity period of a withholding certificate that expires solely by reason of changes in the circumstances of the person whose name is on the certificate. Notwithstanding the first three sentences of this paragraph (f)(2)(i), a withholding agent may choose to not take advantage of the transition rule in this paragraph (f)(2)(i) with respect to one or more withholding certificates valid under the regulations in effect prior to January 1, 2001 (see 26 CFR parts 1 and 35a, revised April 1, 1999) and, therefore, to require withholding certificates conforming to the requirements described in this section (new withholding certificates). For purposes of this section, a new withholding certificate is deemed to satisfy the documentation requirement under the regulations in effect prior to January 1, 2001 (see 26 CFR parts 1 and 35a, revised April 1, 1999). Further, a new withholding certificate remains valid for the period specified in paragraph (e)(4)(ii) of this section, regardless of when the certificate is obtained.

(ii) *Lack of documentation for past years.* A taxpayer may elect to apply the provisions of paragraphs (b)(7)(i)(B), (ii), and (iii) of this section, dealing with liability for failure to obtain documentation timely, to all of its open tax years, including tax years that are currently under examination by the IRS. The election is made by simply taking action under those provisions in the same manner as the taxpayer would take action for payments made after December 31, 2000.

[T.D. 8734, 62 FR 53424, Oct. 14, 1997, as amended by T.D. 8804, 63 FR 72184, 72187, Dec. 31, 1998; T.D. 8856, 64 FR 73409, 73412, Dec. 30, 1999; T.D. 8881, 65 FR 32170, 32211, May 22, 2000; 66 FR 18188, Apr. 6, 2001; T.D. 9023, 67 FR 70312, Nov. 22, 2002; T.D. 9253, 71 FR 13005, Mar. 14, 2006]

§1.1441–2 Amounts subject to withholding.

(a) *In general.* For purposes of the regulations under chapter 3 of the Internal Revenue Code, the term *amounts subject to withholding* means amounts from sources within the United States that constitute either fixed or determinable annual or periodical income described in paragraph (b) of this section or other amounts subject to withholding described in paragraph (c) of this section. For purposes of this paragraph (a), an amount shall be treated as being from sources within the United States if the source of the amount cannot be determined at the

time of payment. See § 1.1441–3(d)(1) for determining the amount to be withheld from a payment in the absence of information at the time of payment regarding the source of the amount. Amounts subject to withholding include amounts that are not fixed or determinable annual or periodical income and upon which withholding is specifically required under a provision of this section or another section of the regulations under chapter 3 of the Internal Revenue Code (such as corporate distributions upon which withholding is required under § 1.1441–3(c)(1) that do not constitute dividend income). Amounts subject to withholding do not include—

(1) Amounts described in § 1.1441–1(b)(4)(i) to the extent they involve interest on obligations in bearer form or on foreign-targeted registered obligations (but, in the case of a foreign-targeted registered obligation, only to the extent of those amounts paid to a registered owner that is a financial institution within the meaning of section 871(h)(5)(B) or a member of a clearing organization which member is the beneficial owner of the obligation);

(2) Amounts described in § 1.1441–1(b)(4)(ii) (dealing with bank deposit interest and similar types of interest (including original issue discount) described in section 871(i)(2)(A) or 881(d));

(3) Amounts described in § 1.1441–1(b)(4)(iv) (dealing with interest or original issue discount on certain short-term obligations described in section 871(g)(1)(B) or 881(e));

(4) Amounts described in § 1.1441–1(b)(4)(xx) (dealing with income from certain gambling winnings exempt from tax under section 871(j));

(5) Amounts paid as part of the purchase price of an obligation sold or exchanged between interest payment dates, unless the sale or exchange is part of a plan the principal purpose of which is to avoid tax and the withholding agent has actual knowledge or reason to know of such plan;

(6) Original issue discount paid as part of the purchase price of an obligation sold or exchanged in a transaction other than a redemption of such obligation, unless the purchase is part of a plan the principal purpose of which is to avoid tax and the withholding agent has actual knowledge or reason to know of such plan; and

(7) Insurance premiums paid with respect to a contract that is subject to the section 4371 excise tax.

(b) *Fixed or determinable annual or periodical income*—(1) *In general*—(i) *Definition.* For purposes of chapter 3 of the Internal Revenue Code and the regulations thereunder, fixed or determinable annual or periodical income includes all income included in gross income under section 61 (including original issue discount) except for the items specified in paragraph (b)(2) of this section. Items of income that are excluded from gross income under a provision of law without regard to the U.S. or foreign status of the owner of the income, such as interest excluded from gross income under section 103(a) or qualified scholarship income under section 117, shall not be treated as fixed or determinable annual or periodical income under chapter 3 of the Internal Revenue Code. Income excluded from gross income under section 892 (income of foreign governments) or section 115 (income of a U.S. possession) is fixed or determinable annual or periodical income since the exclusion from gross income under those sections is dependent on the foreign status of the owner of the income. See § 1.306–3(h) for treating income from the disposition of section 306 stock as fixed or determinable annual or periodical income.

(ii) *Manner of payment.* The term *fixed or determinable annual or periodical* is merely descriptive of the character of a class of income. If an item of income falls within the class of income contemplated in the statute and described in paragraph (a) of this section, it is immaterial whether payment of that item is made in a series of payments or in a single lump sum. Further, the income need not be paid annually if it is paid periodically; that is to say, from time to time, whether or not at regular intervals. The fact that a payment is not made annually or periodically does not, however, prevent it from being fixed or determinable annual or periodical income (e.g., a lump sum payment). In addition, the fact that the length of time during which the payments are to be made may be increased or diminished in accordance with

someone's will or with the happening of an event does not disqualify the payment as determinable or periodical. For this purpose, the share of the fixed or determinable annual or periodical income of an estate or trust from sources within the United States which is required to be distributed currently, or which has been paid or credited during the taxable year, to a nonresident alien beneficiary of such estate or trust constitutes fixed or determinable annual or periodical income.

(iii) *Determinability of amount.* An item of income is fixed when it is to be paid in amounts definitely pre-determined. An item of income is determinable if the amount to be paid is not known but there is a basis of calculation by which the amount may be ascertained at a later time. For example, interest is determinable even if it is contingent in that its amount cannot be determined at the time of payment of an amount with respect to a loan because the calculation of the interest portion of the payment is contingent upon factors that are not fixed at the time of the payment. For purposes of this section, an amount of income does not have to be determined at the time that the payment is made in order to be determinable. An amount of income described in paragraph (a) of this section which the withholding agent knows is part of a payment it makes but which it cannot calculate exactly at the time of payment, is nevertheless determinable if the determination of the exact amount depends upon events expected to occur at a future date. In contrast, a payment which may be income in the future based upon events that are not anticipated at the time the payment is made is not determinable. For example, loan proceeds may become income to the borrower when and to the extent the loan is canceled without repayment. While the cancellation of the debt is income to the borrower when it occurs, it is not determinable at the time the loan proceeds are disbursed to the borrower if the lack of repayment leading to the cancellation of part or all of the debt was not anticipated at the time of disbursement. The fact that the source of an item of income cannot be determined at the time that the payment is made does not render a payment not determinable. See § 1.1441–3(d)(1) for determining the amount to be withheld from a payment in the absence of information at the time of payment regarding the source of the amount.

(2) *Exceptions.* For purposes of chapter 3 of the Code and the regulations thereunder, the items of income described in this paragraph (b)(2) are not fixed or determinable annual or periodical income—

(i) Gains derived from the sale of property (including market discount and option premiums), except for gains described in paragraph (b)(3) or (c) of this section; and

(ii) Any other income that the Internal Revenue Service (IRS) may determine, in published guidance (see § 601.601(d)(2) of this chapter), is not fixed or determinable annual or periodical income.

(3) *Original issue discount*—(i) *Amount subject to tax.* An amount representing original issue discount is fixed or determinable annual or periodical income that is subject to tax under sections 871(a)(1)(C) and 881(a)(3) to the extent provided in those sections and this paragraph (b)(3) if not otherwise excluded under paragraph (a) of this section. An amount of original issue discount is subject to tax with respect to a foreign beneficial owner of an obligation carrying original issue discount upon a sale or exchange of the obligation or when a payment is made on such obligation. The amount taxable is the amount of original issue discount that accrued while the foreign person held the obligation up to the time that the obligation is sold or exchanged or that a payment is made on the obligation, reduced by any amount of original issue discount that was taken into account prior to that time (due to a payment made on the obligation). In the case of a payment made on the obligation, the tax due on the amount of original issue discount may not exceed the amount of the payment reduced by the tax imposed on any portion of the payment that is qualified stated interest.

(ii) *Amounts subject to withholding.* A withholding agent must withhold on the taxable amount of original issue discount paid on the redemption of an

original issue discount obligation unless an exception to withholding applies (e.g., portfolio interest or treaty exception). In addition, withholding is required on the taxable amount of original issue discount upon the sale or exchange of an original issue discount obligation, other than in a redemption, to the extent the withholding agent has actual knowledge or reason to know that the sale or exchange is part of a plan the principal purpose of which is to avoid tax. If a withholding agent cannot determine the taxable amount of original issue discount on the redemption of an original issue discount obligation (or on the sale or exchange of such an obligation if the principal purpose of the sale is to avoid tax), then it must withhold on the entire amount of original issue discount accrued from the date of issue until the date of redemption (or the date the obligation is sold or exchanged) determined on the basis of the most recently published ''List of Original Issue Discount Instruments'' (IRS Publication 1212, available from the IRS Forms Distribution Center) or similar list published by the IRS as if the beneficial owner of the obligation had held the obligation since its original issue.

(iii) *Exceptions to withholding.* To the extent that this paragraph (b)(3) applies to require withholding by a person other than an issuer of an original issue discount obligation, or the issuer's agent, it shall apply only to obligations issued after December 31, 2000.

(4) *Securities lending transactions and equivalent transactions.* See §§ 1.871–7(b)(2) and 1.881–2(b)(2) regarding the character of substitute payments as fixed and determinable annual or periodical income. Such amounts constitute income subject to withholding to the extent they are from sources within the United States, as determined under section §§ 1.861–2(a)(7) and 1.861–3(a)(6). See §§ 1.6042–3(a)(2) and 1.6049–5(a)(5) for reporting requirements applicable to substitute dividend and interest payments, respectively.

(c) *Other income subject to withholding.* Withholding is also required on the following items of income—

(1) Gains described in sections 631 (b) or (c), relating to treatment of gain on disposal of timber, coal, or domestic iron ore with a retained economic interest; and

(2) Gains subject to the 30-percent tax under section 871(a)(1)(D) or 881(a)(4), relating to contingent payments received from the sale or exchange of patents, copyrights, and similar intangible property.

(d) *Exceptions to withholding where no money or property is paid or lack of knowledge*—(1) *General rule.* A withholding agent who is not related to the recipient or beneficial owner has an obligation to withhold under section 1441 only to the extent that, at any time between the date that the obligation to withhold would arise (but for the provisions of this paragraph (d)) and the due date for the filing of return on Form 1042 (including extensions) for the year in which the payment occurs, it has control over, or custody of money or property owned by the recipient or beneficial owner from which to withhold an amount and has knowledge of the facts that give rise to the payment. The exemption from the obligation to withhold under this paragraph (d) shall not apply, however, to distributions with respect to stock or if the lack of control or custody of money or property from which to withhold is part of a pre-arranged plan known to the withholding agent to avoid withholding under section 1441, 1442, or 1443. For purposes of this paragraph (d), a withholding agent is related to the recipient or beneficial owner if it is related within the meaning of section 482. Any exemption from withholding pursuant to this paragraph (d) applies without a requirement that documentation be furnished to the withholding agent. However, documentation may have to be furnished for purposes of the information reporting provisions under chapter 61 of the Code and backup withholding under section 3406. The exemption from withholding under this paragraph (d) is not a determination that the amounts are not fixed or determinable annual or periodical income, nor does it constitute an exemption from reporting the amount under § 1.1461–1 (b) and (c).

(2) *Cancellation of debt.* A lender of funds who forgives any portion of the

loan is deemed to have made a payment of income to the borrower under § 1.61–12 at the time the event of forgiveness occurs. However, based on the rules of paragraph (d)(1) of this section, the lender shall have no obligation to withhold on such amount to the extent that it does not have custody or control over money or property of the borrower at any time between the time that the loan is forgiven and the due date (including extensions) of the Form 1042 for the year in which the payment is deemed to occur. A payment received by the lender from the borrower in partial settlement of the debt obligation does not, for this purpose, constitute an amount of money or property belonging to the borrower from which the withholding tax liability can be satisfied.

(3) *Satisfaction of liability following underwithholding by withholding agent.* A withholding agent who, after failing to withhold the proper amount from a payment, satisfies the underwithheld amount out of its own funds may cause the beneficial owner to realize income to the extent of such satisfaction or may be considered to have advanced funds to the beneficial owner. Such determination depends upon the contractual arrangements governing the satisfaction of such tax liability (e.g., arrangements in which the withholding agent agrees to pay the amount due under section 1441 for the beneficial owner) or applicable laws governing the transaction. If the satisfaction of the tax liability is considered to constitute an advance of funds by the withholding agent to the beneficial owner and the withholding agent fails to collect the amount from the beneficial owner, a cancellation of indebtedness may result, giving rise to income to the beneficial owner under § 1.61–12. While such income is annual or periodical fixed or determinable, the withholding agent shall have no liability to withhold on such income to the extent the conditions set forth in paragraphs (d) (1) and (2) of this section are satisfied with respect to this income. Contrast the rules of this paragraph (d)(3) with the rules in § 1.1441–3(f)(1) dealing with a situation in which the satisfaction of the beneficial owner's tax liability itself constitutes additional income to the beneficial owner. See, also, § 1.1441–3(c)(2)(ii)(B) for a special rule regarding underwithholding on corporate distributions due to underestimating an amount of earnings and profits.

(e) *Payment*—(1) *General rule.* A payment is considered made to a person if that person realizes income whether or not such income results from an actual transfer of cash or other property. For example, realization of income from cancellation of debt results in a deemed payment. A payment is considered made when the amount would be includible in the income of the beneficial owner under the U.S. tax principles governing the cash basis method of accounting. A payment is considered made whether it is made directly to the beneficial owner or to another person for the benefit of the beneficial owner (e.g., to the agent of the beneficial owner). Thus, a payment of income is considered made to a beneficial owner if it is paid in complete or partial satisfaction of the beneficial owner's debt to a creditor. In the event of a conflict between the rules of this paragraph (e)(1) governing whether a payment has occurred and its timing and the rules of § 31.3406(a)–4 of this chapter, the rules in § 31.3406(a)–4 of this chapter shall apply to the extent that the application of section 3406 is relevant to the transaction at issue.

(2) *Income allocated under section 482.* A payment is considered made to the extent income subject to withholding is allocated under section 482. Further, income arising as a result of a secondary adjustment made in conjunction with a reallocation of income under section 482 from a foreign person to a related U.S. person is considered paid to a foreign person unless the taxpayer to whom the income is reallocated has entered into a repatriation agreement with the IRS and the agreement eliminates the liability for withholding under this section. For purposes of determining the liability for withholding, the payment of income is deemed to have occurred on the last day of the taxable year in which the transactions that give rise to the allocation of income and the secondary adjustments, if any, took place.

(3) *Blocked income.* Income is not considered paid if it is blocked under executive authority, such as the President's exercise of emergency power under the Trading with the Enemy Act (50 U.S.C. App. 5), or the International Emergency Economic Powers Act (50 U.S.C. 1701 *et seq.*). However, on the date that the blocking restrictions are removed, the income that was blocked is considered constructively received by the beneficial owner (and therefore paid for purposes of this section) and subject to withholding under § 1.1441–1. Any exemption from withholding pursuant to this paragraph (e)(3) applies without a requirement that documentation be furnished to the withholding agent. However, documentation may have to be furnished for purposes of the information reporting provisions under chapter 61 of the Code and backup withholding under section 3406. The exemption from withholding granted by this paragraph (e)(3) is not a determination that the amounts are not fixed or determinable annual or periodical income.

(4) *Special rules for dividends.* For purposes of sections 1441 and 6042, in the case of stock for which the record date is earlier than the payment date, dividends are considered paid on the payment date. In the case of a corporate reorganization, if a beneficial owner is required to exchange stock held in a former corporation for stock in a new corporation before dividends that are to be paid with respect to the stock in the new corporation will be paid on such stock, the dividend is considered paid on the date that the payee or beneficial owner actually exchanges the stock and receives the dividend. See § 31.3406(a)–4(a)(2) of this chapter.

(5) *Certain interest accrued by a foreign corporation.* For purposes of sections 1441 and 6049, a foreign corporation shall be treated as having made a payment of interest as of the last day of the taxable year if it has made an election under § 1.884–4(c)(1) to treat accrued interest as if it were paid in that taxable year.

(6) *Payments other than in U.S. dollars.* For purposes of section 1441, a payment includes amounts paid in a medium other than U.S. dollars. See § 1.1441–3(e) for rules regarding the amount subject to withholding in the case of such payments.

(f) *Effective date.* This section applies to payments made after December 31, 2000.

[T.D. 8734, 62 FR 53444, Oct. 14, 1997, as amended by T.D. 8804, 63 FR 72187, Dec. 31, 1998; T.D. 8856, 64 FR 73412, Dec. 30, 1999; T.D. 8881, 65 FR 32186, May 22, 2000]

§ 1.1441–3 Determination of amounts to be withheld.

(a) *Withholding on gross amount.* Except as otherwise provided in regulations under section 1441, the amount subject to withholding under § 1.1441–1 is the gross amount of income subject to withholding that is paid to a foreign person. The gross amount of income subject to withholding may not be reduced by any deductions, except to the extent that one or more personal exemptions are allowed as provided under § 1.1441–4(b)(6).

(b) *Withholding on payments on certain obligations*—(1) *Withholding at time of payment of interest.* When making a payment on an interest-bearing obligation, a withholding agent must withhold under § 1.1441–1 upon the gross amount of stated interest payable on the interest payment date, regardless of whether the payment constitutes a return of capital or the payment of income within the meaning of section 61. To the extent an amount was withheld on an amount of capital rather than interest, see the rules for adjustments, refunds, or credits under § 1.1441–1(b)(8).

(2) *No withholding between interest payment dates*—(i) *In general.* A withholding agent is not required to withhold under § 1.1441–1 upon interest accrued on the date of a sale or exchange of a debt obligation when that sale occurs between two interest payment dates (even though the amount is treated as interest under § 1.61–7(c) or (d) and is subject to tax under section 871 or 881). See § 1.6045–1(c) for reporting requirements by brokers with respect to sale proceeds. See § 1.61–7(c) regarding the character of payments received by the acquirer of an obligation subsequent to such acquisition (that is, as a return of capital or interest accrued after the acquisition). Any exemption from withholding pursuant to this

paragraph (b)(2)(i) applies without a requirement that documentation be furnished to the withholding agent. However, documentation may have to be furnished for purposes of the information reporting provisions under section 6045 or 6049 and backup withholding under section 3406. The exemption from withholding granted by this paragraph (b)(2) is not a determination that the accrued interest is not fixed or determinable annual or periodical income under section 871(a) or 881(a).

(ii) *Anti-abuse rule.* The exemption in paragraph (b)(2)(i) of this section does not apply if the sale of securities is part of a plan the principal purpose of which is to avoid tax by selling and repurchasing securities and the withholding agent has actual knowledge or reason to know of such plan.

(c) *Corporate distributions*—(1) *General rule.* A corporation making a distribution with respect to its stock or any intermediary (described in §1.1441–1(c)(13)) making a payment of such a distribution is required to withhold under section 1441, 1442, or 1443 on the entire amount of the distribution, unless it elects to reduce the amount of withholding under the provisions of this paragraph (c). Any exceptions from withholding provided by this paragraph (c) apply without any requirement to furnish documentation to the withholding agent. However, documentation may have to be furnished for purposes of the information reporting provisions under section 6042 or 6045 and backup withholding under section 3406. See §1.1461–1(c) to determine whether amounts excepted from withholding under this section are considered amounts that are subject to reporting.

(2) *Exception to withholding on distributions*—(i) *In general.* An election described in paragraph (c)(1) of this section is made by actually reducing the amount of withholding at the time that the payment is made. An intermediary that makes a payment of a distribution is not required to reduce the withholding based on the distributing corporation's estimates under this paragraph (c)(2) even if the distributing corporation itself elects to reduce the withholding on payments of distributions that it itself makes to foreign persons. Conversely, an intermediary may elect to reduce the amount of withholding with respect to the payment of a distribution even if the distributing corporation does not so elect for the payments of distributions that it itself makes of distributions to foreign persons. The amounts with respect to which a distributing corporation or intermediary may elect to reduce the withholding are as follows:

(A) A distributing corporation or intermediary may elect to not withhold on a distribution to the extent it represents a nontaxable distribution payable in stock or stock rights.

(B) A distributing corporation or intermediary may elect to not withhold on a distribution to the extent it represents a distribution in part or full payment in exchange for stock.

(C) A distributing corporation or intermediary may elect to not withhold on a distribution (actual or deemed) to the extent it is not paid out of accumulated earnings and profits or current earnings and profits, based on a reasonable estimate determined under paragraph (c)(2)(ii) of this section.

(D) A regulated investment company or intermediary may elect to not withhold on a distribution representing a capital gain dividend (as defined in section 852(b)(3)(C)) or an exempt interest dividend (as defined in section 852(b)(5)(A)) based on the applicable procedures described under paragraph (c)(3) of this section.

(E) A U.S. Real Property Holding Corporation (defined in section 897(c)(2)) or a real estate investment trust (defined in section 856) or intermediary may elect to not withhold on a distribution to the extent it is subject to withholding under section 1445 and the regulations under that section. See paragraph (c)(4) of this section for applicable procedures.

(ii) *Reasonable estimate of accumulated and current earnings and profits on the date of payment*—(A) *General rule.* A reasonable estimate for purposes of paragraph (c)(2)(i)(C) of this section is a determination made by the distributing corporation at a time reasonably close to the date of payment of the extent to which the distribution will constitute a

dividend, as defined in section 316. The determination is based upon the anticipated amount of accumulated earnings and profits and current earnings and profits for the taxable year in which the distribution is made, the distributions made prior to the distribution for which the estimate is made and all other relevant facts and circumstances. A reasonable estimate may be made based on the procedures described in § 31.3406(b)(2)–4(c)(2) of this chapter.

(B) *Procedures in case of underwithholding.* A distributing corporation or intermediary that is a withholding agent with respect to a distribution and that determines at the end of the taxable year in which the distribution is made that it underwithheld under section 1441 on the distribution shall be liable for the amount underwithheld as a withholding agent under section 1461. However, for purposes of this section and § 1.1461–1, any amount underwithheld paid by a distributing corporation, its paying agent, or an intermediary shall not be treated as income subject to additional withholding even if that amount is treated as additional income to the shareholders unless the additional amount is income to the shareholder as a result of a contractual arrangement between the parties regarding the satisfaction of the shareholder's tax liabilities. In addition, no penalties shall be imposed for failure to withhold and deposit the tax if—

(*1*) The distributing corporation made a reasonable estimate as provided in paragraph (c)(2)(ii)(A) of this section; and

(*2*) Either—

(*i*) The corporation or intermediary pays over the underwithheld amount on or before the due date for filing a Form 1042 for the calendar year in which the distribution is made, pursuant to § 1.1461–2(b); or

(*ii*) The corporation or intermediary is not a calendar year taxpayer and it files an amended return on Form 1042X (or such other form as the Commissioner may prescribe) for the calendar year in which the distribution is made and pays the underwithheld amount and interest within 60 days after the close of the taxable year in which the distribution is made.

(C) *Reliance by intermediary on reasonable estimate.* For purposes of determining whether the payment of a corporate distribution is a dividend, a withholding agent that is not the distributing corporation may, absent actual knowledge or reason to know otherwise, rely on representations made by the distributing corporation regarding the reasonable estimate of the anticipated accumulated and current earnings and profits made in accordance with paragraph (c)(2)(ii)(A) of this section. Failure by the withholding agent to withhold the required amount due to a failure by the distributing corporation to reasonably estimate the portion of the distribution treated as a dividend or to properly communicate the information to the withholding agent shall be imputed to the distributing corporation. In such a case, the Internal Revenue Service (IRS) may collect from the distributing corporation any underwithheld amount and subject the distributing corporation to applicable interest and penalties as a withholding agent.

(D) *Example.* The rules of this paragraph (c)(2) are illustrated by the following example:

Example. (i) *Facts.* Corporation X, a publicly traded corporation with both U.S. and foreign shareholders and a calendar year taxpayer, has an accumulated deficit in earnings and profits at the close of 2000. In 2001, Corporation X generates $1 million of current earnings and profits each month and makes an $18 million distribution, resulting in a $12 million dividend. Corporation X plans to make an additional $18 million distribution on October 1, 2002. Approximately one month before that date, Corporation X's management receives an internal report from its legal and accounting department concerning Corporation X's estimated current earnings and profits. The report states that Corporation X should generate only $5.1 million of current earnings and profits by the close of the third quarter due to costs relating to substantial organizational and product changes, but these changes will enable Corporation X to generate $1.3 million of earnings and profits monthly for the last quarter of the 2002 fiscal year. Thus, the total amount of current and earnings and profits for 2002 is estimated to be $9 million.

(ii) *Analysis.* Based on the facts in paragraph (i) of this *Example,* including the fact that earnings and profits estimate was made within a reasonable time before the distribution, Corporation X can rely on the estimate

under paragraph (c)(2)(ii)(A) of this section. Therefore, Corporation X may treat $9 million of the $18 million of the October 1, 2002, distribution to foreign shareholders as a nondividend distribution.

(3) *Special rules in the case of distributions from a regulated investment company*—(i) *General rule.* If the amount of any distributions designated as being subject to section 852(b)(3)(C) or 5(A), or 871(k)(1)(C) or (2)(C), exceeds the amount that may be designated under those sections for the taxable year, then no penalties will be asserted for any resulting underwithholding if the designations were based on a reasonable estimate (made pursuant to the same procedures as described in paragraph (c)(2)(ii)(A) of this section) and the adjustments to the amount withheld are made within the time period described in paragraph (c)(2)(ii)(B) of this section. Any adjustment to the amount of tax due and paid to the IRS by the withholding agent as a result of underwithholding shall not be treated as a distribution for purposes of section 562(c) and the regulations thereunder. Any amount of U.S. tax that a foreign shareholder is treated as having paid on the undistributed capital gain of a regulated investment company under section 852(b)(3)(D) may be claimed by the foreign shareholder as a credit or refund under § 1.1464–1.

(ii) *Reliance by intermediary on reasonable estimate.* For purposes of determining whether a payment is a distribution designated as subject to section 852(b)(3)(C) or (5)(A), or 871(k)(1)(C) or (2)(C), a withholding agent that is not the distributing regulated investment company may, absent actual knowledge or reason to know otherwise, rely on the designations that the distributing company represents have been made in accordance with paragraph (c)(3)(i) of this section. Failure by the withholding agent to withhold the required amount due to a failure by the regulated investment company to reasonably estimate the required amounts or to properly communicate the relevant information to the withholding agent shall be imputed to the distributing company. In such a case, the IRS may collect from the distributing company any underwithheld amount and subject the company to applicable interest and penalties as a withholding agent.

(4) *Coordination with withholding under section 1445*—(i) *In general.* A distribution from a U.S. Real Property Holding Corporation (USRPHC) (or from a corporation that was a USRPHC at any time during the five-year period ending on the date of distribution) with respect to stock that is a U.S. real property interest under section 897(c) or from a Real Estate Investment Trust (REIT) with respect to its stock is subject to the withholding provisions under section 1441 (or section 1442 or 1443) and section 1445. A USRPHC making a distribution shall be treated as satisfying its withholding obligations under both sections if it withholds in accordance with one of the procedures described in either paragraph (c)(4)(i)(A) or (B) of this section. A USRPHC must apply the same withholding procedure to all the distributions made during the taxable year. However, the USRPHC may change the applicable withholding procedure from year to year. For rules regarding distributions by REITs, see paragraph (c)(4)(i)(C) of this section.

(A) *Withholding under section 1441.* The USRPHC may choose to withhold on a distribution only under section 1441 (or 1442 or 1443) and not under section 1445. In such a case, the USRPHC must withhold under section 1441 (or 1442 or 1443) on the full amount of the distribution, whether or not any portion of the distribution represents a return of basis or capital gain. If a reduced tax rate under an income tax treaty applies to the distribution by the USRPHC, then the applicable rate of withholding on the distribution shall be no less than 10-percent, unless the applicable treaty specifies an applicable lower rate for distributions from a USRPHC, in which case the lower rate may apply.

(B) *Withholding under both sections 1441 and 1445.* As an alternative to the procedure described in paragraph (c)(4)(i)(A) of this section, a USRPHC may choose to withhold under both sections 1441 (or 1442 or 1443) and 1445 under the procedures set forth in this paragraph (c)(4)(i)(B). The USRPHC must make a reasonable estimate of the portion of the distribution that is a

dividend under paragraph (c)(2)(ii)(A) of this section, and must—

(*1*) Withhold under section 1441 (or 1442 or 1443) on the portion of the distribution that is estimated to be a dividend under paragraph (c)(2)(ii)(A) of this section; and

(*2*) Withhold under section 1445(e)(3) and § 1.1445–5(e) on the remainder of the distribution or on such smaller portion based on a withholding certificate obtained in accordance with § 1.1445–5(e)(2)(iv).

(C) *Coordination with REIT withholding.* Withholding is required under section 1441 (or 1442 or 1443) on the portion of a distribution from a REIT that is not designated as a capital gain dividend, a return of basis, or a distribution in excess of a shareholder's adjusted basis in the stock of the REIT that is treated as a capital gain under section 301(c)(3). A distribution in excess of a shareholder's adjusted basis in the stock of the REIT is, however, subject to withholding under section 1445, unless the interest in the REIT is not a U.S. real property interest (e.g., an interest in a domestically controlled REIT under section 897(h)(2)). In addition, withholding is required under section 1445 on the portion of the distribution designated by a REIT as a capital gain dividend. See § 1.1445–8.

(ii) *Intermediary reliance rule.* A withholding agent that is not the distributing USRPHC must withhold under paragraph (c)(4)(i) of this section, but may, absent actual knowledge or reason to know otherwise, rely on representations made by the USRPHC regarding the determinations required under paragraph (c)(4)(i) of this section. Failure by the withholding agent to withhold the required amount due to a failure by the distributing USRPHC to make these determinations in a reasonable manner or to properly communicate the determinations to the withholding agent shall be imputed to the distributing USRPHC. In such a case, the IRS may collect from the distributing USRPHC any underwithheld amount and subject the distributing USRPHC to applicable interest and penalties as a withholding agent.

(d) *Withholding on payments that include an undetermined amount of income*—(1) *In general.* Where the withholding agent makes a payment and does not know at the time of payment the amount that is subject to withholding because the determination of the source of the income or the calculation of the amount of income subject to tax depends upon facts that are not known at the time of payment, then the withholding agent must withhold an amount under § 1.1441–1 based on the entire amount paid that is necessary to assure that the tax withheld is not less than 30 percent (or other applicable percentage) of the amount that will subsequently be determined to be from sources within the United States or to be income subject to tax. The amount so withheld shall not exceed 30 percent of the amount paid. In the alternative, the withholding agent may make a reasonable estimate of the amount from U.S. sources or of the taxable amount and set aside a corresponding portion of the amount due under the transaction and hold such portion in escrow until the amount from U.S. sources or the taxable amount can be determined, at which point withholding becomes due under § 1.1441–1. See § 1.1441–1(b)(8) regarding adjustments in the case of overwithholding. The provisions of this paragraph (d)(1) shall not apply to the extent that other provisions of the regulations under chapter 3 of the Internal Revenue Code (Code) specify the amount to be withheld, if any, when the withholding agent lacks knowledge at the time of payment (e.g., lack of reliable knowledge regarding the status of the payee or beneficial owner, addressed in § 1.1441–1(b)(3), or lack of knowledge regarding the amount of original issue discount under § 1.1441–2(b)(3)).

(2) *Withholding on certain gains.* Absent actual knowledge or reason to know otherwise, a withholding agent may rely on a claim regarding the amount of gain described in § 1.1441–2(c) if the beneficial owner withholding certificate, or other appropriate withholding certificate, states the beneficial owner's basis in the property giving rise to the gain. In the absence of a reliable representation on a withholding certificate, the withholding agent must withhold an amount under § 1.1441–1 that is necessary to assure

that the tax withheld is not less than 30 percent (or other applicable percentage) of the recognized gain. For this purpose, the recognized gain is determined without regard to any deduction allowed by the Code from the gains. The amount so withheld shall not exceed 30 percent of the amount payable by reason of the transaction giving rise to the recognized gain. See § 1.1441–1(b)(8) regarding adjustments in the case of overwithholding.

(e) *Payments other than in U.S. dollars*—(1) *In general.* The amount of a payment made in a medium other than U.S. dollars is measured by the fair market value of the property or services provided in lieu of U.S. dollars. The withholding agent may liquidate the property prior to payment in order to withhold the required amount of tax under section 1441 or obtain payment of the tax from an alternative source. However, the obligation to withhold under section 1441 is not deferred even if no alternative source can be located. Thus, for purposes of withholding under chapter 3 of the Code, the provisions of § 31.3406(h)–2(b)(2)(ii) of this chapter (relating to backup withholding from another source) shall not apply. If the withholding agent satisfies the tax liability related to such payments, the rules of paragraph (f) of this section apply.

(2) *Payments in foreign currency.* If the amount subject to withholding tax is paid in a currency other than the U.S. dollar, the amount of withholding under section 1441 shall be determined by applying the applicable rate of withholding to the foreign currency amount and converting the amount withheld into U.S. dollars on the date of payment at the spot rate (as defined in § 1.988–1(d)(1)) in effect on that date. A withholding agent making regular or frequent payments in foreign currency may use a month-end spot rate or a monthly average spot rate. In addition, such a withholding agent may use the spot rate on the date the amount of tax is deposited (within the meaning of § 1.6302–2(a)), provided that such deposit is made within seven days of the date of the payment giving rise to the obligation to withhold. A spot rate convention must be used consistently for all non-dollar amounts withheld and from year to year. Such convention cannot be changed without the consent of the Commissioner. The U.S. dollar amount so determined shall be treated by the beneficial owner as the amount of tax paid on the income for purposes of determining the final U.S. tax liability and, if applicable, claiming a refund or credit of tax.

(f) *Tax liability of beneficial owner satisfied by withholding agent*—(1) *General rule.* In the event that the satisfaction of a tax liability of a beneficial owner by a withholding agent constitutes income to the beneficial owner and such income is of a type that is subject to withholding, the amount of the payment deemed made by the withholding agent for purposes of this paragraph (f) shall be determined under the gross-up formula provided in this paragraph (f)(1). Whether the payment of the tax by the withholding agent constitutes a satisfaction of the beneficial owner's tax liability and whether, as such, it constitutes additional income to the beneficial owner, must be determined under all the facts and circumstances surrounding the transaction, including any agreements between the parties and applicable law. The formula described in this paragraph (f)(1) is as follows:

$$\text{Payment} = \frac{\text{Gross payment without withholding}}{1\text{-(tax rate)}}$$

(2) *Example.* The following example illustrates the provisions of this paragraph (f):

Example. College X awards a qualified scholarship within the meaning of section 117(b) to foreign student, FS, who is in the United States on an F visa. FS is a resident of a country that does not have an income tax treaty with the United States. The scholarship is $20,000 to be applied to tuition, mandatory fees and books, plus benefits in kind consisting of room and board and roundtrip air transportation. College X agrees to pay any U.S. income tax owed by FS with respect to the scholarship. The fair market value of the room and board measured by the amount College X charges non-scholarship students is $6,000. The cost of the roundtrip air transportation is $2,600. Therefore, the total fair market value of the scholarship received by FS is $28,600. However, the amount taxable is limited to the fair market value of the benefits in kind ($8,600) because the portion of the scholarship amount for

tuition, fees, and books is not included in gross income under section 117. The applicable rate of withholding is 14 percent under section 1441(b). Therefore, under the gross-up formula, College X is deemed to make a payment of $10,000 ($8,600 divided by (1–.14). The U.S. tax that must be deducted and withheld from the payment under section 1441(b) is $1,400 (.14×$10,000). College X reports scholarship income of $30,000 and $1,400 of U.S. tax withheld on Forms 1042 and 1042–S.

(g) *Conduit financing arrangements*—(1) *Duty to withhold.* A financed entity or other person required to withhold tax under section 1441 with respect to a financing arrangement that is a conduit financing arrangement within the meaning of § 1.881–3(a)(2)(iv) shall be required to withhold under section 1441 as if the district director had determined, pursuant to § 1.881–3(a)(3), that all conduit entities that are parties to the conduit financing arrangement should be disregarded. The amount of tax required to be withheld shall be determined under § 1.881–3(d). The withholding agent may withhold tax at a reduced rate if the financing entity establishes that it is entitled to the benefit of a treaty that provides a reduced rate of tax on a payment of the type deemed to have been paid to the financing entity. Section 1.881–3(a)(3)(ii)(E) shall not apply for purposes of determining whether any person is required to deduct and withhold tax pursuant to this paragraph (g), or whether any party to a financing arrangement is liable for failure to withhold or entitled to a refund of tax under sections 1441 or 1461 to 1464 (except to the extent the amount withheld exceeds the tax liability determined under § 1.881–3(d)). See § 1.1441–7(f) relating to withholding tax liability of the withholding agent in conduit financing arrangements subject to § 1.881–3.

(2) *Effective date.* This paragraph (g) is effective for payments made by financed entities on or after September 11, 1995. This paragraph shall not apply to interest payments covered by section 127(g)(3) of the Tax Reform Act of 1984, and to interest payments with respect to other debt obligations issued prior to October 15, 1984 (whether or not such debt was issued by a Netherlands Antilles corporation).

(h) *Effective date.* Except as otherwise provided in paragraph (g) of this section, this section applies to payments made after December 31, 2000.

[T.D. 6500, 25 FR 12074, Nov. 26, 1960, as amended by T.D. 6908, 31 FR 16771, Dec. 31, 1966; T.D. 7378, 40 FR 45436, Oct. 2, 1975; T.D. 7977, 49 FR 36831, Sept. 20, 1984; T.D. 8611, 60 FR 41014, Aug. 11, 1995; T.D. 8734, 62 FR 53446, Oct. 14, 1997; T.D. 8804, 63 FR 72187, Dec. 31, 1998; T.D. 8856, 64 FR 73412, Dec. 30, 1999; T.D. 8881, 65 FR 32187, 32212, May 22, 2000; T.D. 9253, 71 FR 13006, Mar. 14, 2006]

§ 1.1441–4 Exemptions from withholding for certain effectively connected income and other amounts.

(a) *Certain income connected with a U.S. trade or business*—(1) *In general.* No withholding is required under section 1441 on income otherwise subject to withholding if the income is (or is deemed to be) effectively connected with the conduct of a trade or business within the United States and is includible in the beneficial owner's gross income for the taxable year. For purposes of this paragraph (a), an amount is not deemed to be includible in gross income if the amount is (or is deemed to be) effectively connected with the conduct of a trade or business within the United States and the beneficial owner claims an exemption from tax under an income tax treaty because the income is not attributable to a permanent establishment in the United States. To claim a reduced rate of withholding because the income is not attributable to a permanent establishment, see § 1.1441–6(b)(1). This paragraph (a) does not apply to income of a foreign corporation to which section 543(a)(7) applies for the taxable year or to compensation for personal services performed by an individual. See paragraph (b) of this section for compensation for personal services performed by an individual.

(2) *Withholding agent's reliance on a claim of effectively connected income*—(i) *In general.* Absent actual knowledge or reason to know otherwise, a withholding agent may rely on a claim of exemption based upon paragraph (a)(1) of this section if, prior to the payment to the foreign person, the withholding agent can reliably associate the payment with a Form W–8 upon which it can rely to treat the payment as made

to a foreign beneficial owner in accordance with §1.1441–1(e)(1)(ii). For purposes of this paragraph (a), a withholding certificate is valid only if, in addition to other applicable requirements, it includes the taxpayer identifying number of the person whose name is on the Form W–8 and represents, under penalties of perjury, that the amounts for which the certificate is furnished are effectively connected with the conduct of a trade or business in the United States and is includable in the beneficial owner's gross income for the taxable year. In the absence of a reliable claim that the income is effectively connected with the conduct of a trade or business in the United States, the income is presumed not to be effectively connected, except as otherwise provided in paragraph (a) (2)(ii) or (3) of this section. See §1.1441–1(e)(4)(ii)(C) for the period of validity applicable to a certificate provided under this section and §1.1441–1(e)(4)(ii)(D) for changes in circumstances arising during the taxable year indicating that the income to which the certificate relates is not, or is no longer expected to be, effectively connected with the conduct of a trade or business within the United States. A withholding certificate shall be effective only for the item or items of income specified therein. The provisions of §1.1441–1(b)(3)(iv) dealing with a 90-day grace period shall apply for purposes of this section.

(ii) *Special rules for U.S. branches of foreign persons*—(A) *U.S. branches of certain foreign banks or foreign insurance companies.* A payment to a U.S. branch described in §1.1441–1(b)(2)(iv)(A) is presumed to be effectively connected with the conduct of a trade or business in the United States without the need to furnish a certificate, unless the U.S. branch provides a U.S. branch withholding certificate described in §1.1441–1(e)(3)(v) that represents otherwise. If no certificate is furnished but the income is not, in fact, effectively connected income, then the branch must withhold whether the payment is collected on behalf of other persons or on behalf of another branch of the same entity. See §1.1441–1(b) (2)(iv) and (6) for general rules applicable to payments to U.S. branches of foreign persons.

(B) *Other U.S. branches.* See §1.1441–1(b)(2)(iv)(E) for similar procedures for other U.S. branches to the extent provided in a determination letter from the district director or the Assistant Commissioner (International).

(3) *Income on notional principal contracts*—(i) *General rule.* A withholding agent that pays amounts attributable to a notional principal contract described in §1.863–7(a) or 1.988–2(e) shall have no obligation to withhold on the amounts paid under the terms of the notional principal contract regardless of whether a withholding certificate is provided. However, a withholding agent must file returns under §1.1461–1(b) and (c) reporting the income that it must treat as effectively connected with the conduct of a trade or business in the United States under the provisions of this paragraph (a)(3). Except as otherwise provided in paragraph (a)(3)(ii) of this section, a withholding agent must treat the income as effectively connected with the conduct of a U.S. trade or business if the income is paid to, or to the account of, a qualified business unit of a foreign person located in the United States or, if the payment is paid to, or to the account of, a qualified business unit of a foreign person located outside the United States, the withholding agent knows, or has reason to know, the payment is effectively connected with the conduct of a trade or business within the United States. Income on a notional principal contract does not include the amount characterized as interest under the provisions of §1.446–3(g)(4).

(ii) *Exception for certain payments.* A payment shall not be treated as effectively connected with the conduct of a trade or business within the United States for purposes of paragraph (a)(3)(i) of this section even if no withholding certificate is furnished if the payee provides a representation in a master agreement that governs the transactions in notional principal contracts between the parties (for example an International Swaps and Derivatives Association (ISDA) Agreement, including the Schedule thereto) or in the confirmation on the particular notional principal contract transaction

that the payee is a U.S. person or a non-U.S. branch of a foreign person.

(b) *Compensation for personal services of an individual*—(1) *Exemption from withholding.* Withholding is not required under §1.1441–1 from salaries, wages, remuneration, or any other compensation for personal services of a nonresident alien individual if such compensation is effectively connected with the conduct of a trade or business within the United States and—

(i) Such compensation is subject to withholding under section 3402 (relating to withholding on wages) and the regulations under that section;

(ii) Such compensation would be subject to withholding under section 3402 but for the provisions of section 3401(a) (not including section 3401(a)(6)) and the regulations under that section. This paragraph (b)(1)(ii) does not apply to payments to a nonresident alien individual from any trust described in section 401(a), any annuity plan described in section 403(a), any annuity, custodial account, or retirement income account described in section 403(b), or an individual retirement account or individual retirement annuity described in section 408. Instead, these payments are subject to withholding under this section to the extent they are exempted from the definition of wages under section 3401(a)(12) or to the extent they are from an annuity, custodial account, or retirement income account described in section 403(b), or an individual retirement account or individual retirement annuity described in section 408. Thus, for example, payments to a nonresident alien individual from a trust described in section 401(a) are subject to withholding under section 1441 and not under section 3405 or section 3406.

(iii) Such compensation is for services performed by a nonresident alien individual who is a resident of Canada or Mexico and who enters and leaves the United States at frequent intervals;

(iv) Such compensation is, or will be, exempt from the income tax imposed by chapter 1 of the Code by reason of a provision of the Internal Revenue Code or a tax treaty to which the United States is a party;

(v) Such compensation is paid after January 3, 1979 as a commission or rebate paid by a ship supplier to a nonresident alien individual, who is employed by a nonresident alien individual, foreign partnership, or foreign corporation in the operation of a ship or ships of foreign registry, for placing orders for supplies to be used in the operation of such ship or ships with the supplier. See section 162(c) and the regulations thereunder for denial of deductions for illegal bribes, kickbacks, and other payments; or

(vi) Compensation that is exempt from withholding under section 3402 by reason of section 3402(e), provided that the employee and his employer enter into an agreement under section 3402(p) to provide for the withholding of income tax upon payments of amounts described in §31.3401(a)–3(b)(1) of this chapter. An employee who desires to enter into such an agreement should furnish his employer with Form W–4 (withholding exemption certificate) (or such other form as the Internal Revenue Service (IRS) may prescribe). See section 3402(f) and the regulations thereunder and §31.3402(p)-1 of this chapter.

(2) *Manner of obtaining withholding exemption under tax treaty*—(i) *In general.* In order to obtain the exemption from withholding by reason of a tax treaty, provided by paragraph (b)(1)(iv) of this section, a nonresident alien individual must submit a withholding certificate (described in paragraph (b)(2)(ii) of this section) to each withholding agent from whom amounts are to be received. A separate withholding certificate must be filed for each taxable year of the alien individual. If the withholding agent is satisfied that an exemption from withholding is warranted (see paragraph (b)(2)(iii) of this section), the withholding certificate shall be accepted in the manner set forth in paragraph (b)(2)(iv) of this section. The exemption from withholding becomes effective for payments made at least ten days after a copy of the accepted withholding certificate is forwarded to the Assistant Commissioner (International). The withholding agent may rely on an accepted withholding certificate only if the IRS has not objected to the certificate. For purposes

of this paragraph (b)(2)(i), the IRS will be considered to have not objected to the certificate if it has not notified the withholding agent within a 10-day period beginning from the date that the withholding certificate is forwarded to the IRS pursuant to paragraph (b)(2)(v) of this section. After expiration of the 10-day period, the withholding agent may rely on the withholding certificate retroactive to the date of the first payment covered by the certificate. The fact that the IRS does not object to the withholding certificate within the 10-day period provided in this paragraph (b)(2)(i) shall not preclude the IRS from examining the withholding agent at a later date in light of facts that the withholding agent knew or had reason to know regarding the payment and eligibility for a reduced rate and that were not disclosed to the IRS as part of the 10-day review process.

(ii) *Withholding certificate claiming withholding exemption.* The statement claiming an exemption from withholding shall be made on Form 8233 (or an acceptable substitute or such other form as the IRS may prescribe). Form 8233 shall be dated, signed by the beneficial owner under penalties of perjury, and contain the following information—

(A) The individual's name, permanent residence address, taxpayer identifying number (or a copy of a completed Form W–7 or SS–5 showing that a number has been applied for), and the U.S. visa number, if any;

(B) The individual's current immigration status and visa type;

(C) The individual's original date of entry into the United States;

(D) The country that issued the individual's passport and the number of such passport, or the individual's permanent address if a citizen of Canada or Mexico;

(E) The taxable year for which the statement is to apply, the compensation to which it relates, and the amount (or estimated amount if exact amount not known) of such compensation;

(F) A statement that the individual is not a citizen or resident of the United States;

(G) The number of personal exemptions claimed by the individual;

(H) A statement as to whether the compensation to be paid to him or her during the taxable year is or will be exempt from income tax and the reason why the compensation is exempt;

(I) If the compensation is exempt from withholding by reason of an income tax treaty to which the United States is a party, the tax treaty and provision under which the exemption from withholding is claimed and the country of which the individual is a resident;

(J) Sufficient facts to justify the claim in exemption from withholding; and

(K) Any other information as may be required by the form or accompanying instructions in addition to, or in lieu of, the information described in this paragraph (b)(2)(ii).

(iii) *Review by withholding agent.* The exemption from withholding provided by paragraph (b)(1)(iv) of this section shall not apply unless the withholding agent accepts (in the manner provided in paragraph (b)(2)(iv) of this section) the statement on Form 8233 supplied by the nonresident alien individual. Before accepting the statement the withholding agent must examine the statement. If the withholding agent knows or has reason to know that any of the facts or assertions on Form 8233 may be false or that the eligibility of the individual's compensation for the exemption cannot be readily determined, the withholding agent may not accept the statement on Form 8233 and is required to withhold under this section. If the withholding agent accepts the statement and subsequently finds that any of the facts or assertions contained on Form 8233 may be false or that the eligibility of the individual's compensation for the exemption can no longer be readily determined, then the withholding agent shall promptly so notify the Assistant Commissioner (International) by letter, and the withholding agent is not relieved of liability to withhold on any amounts still to be paid. If the withholding agent is notified by the Assistant Commissioner (International) that the eligibility of the individual's compensation for the exemption is in doubt or that such

compensation is not eligible for the exemption, the withholding agent is required to withhold under this section. The rules of this paragraph are illustrated by the following examples.

Example 1. C, a nonresident alien individual, submits Form 8233 to W, a withholding agent. The statement on Form 8233 does not include all the information required by paragraph (b)(2)(ii) of this section. Therefore, W has reason to know that he or she cannot readily determine whether C's compensation for personal services is eligible for an exemption from withholding and, therefore, W must withhold.

Example 2. D, a nonresident alien, is performing services for W, a withholding agent. W has accepted a statement on Form 8233 submitted by D, according to the provisions of this section. W receives notice from the Internal Revenue Service that the eligibility of D's compensation for a withholding exemption is in doubt. Therefore, W has reason to know that the eligibility of the compensation for a withholding exemption cannot be readily determined, as of the date W receives the notification, and W must withhold tax under section 1441 on amounts paid after receipt of the notification.

Example 3. E, a nonresident alien individual, submits Form 8233 to W, a withholding agent for whom E is to perform personal services. The statement contains all the information requested on Form 8233. E claims an exemption from withholding based on a personal exemption amount computed on the number of days E will perform personal services for W in the United States. If W does not know or have reason to know that any statement on the Form 8233 is false or that the eligibility of E's compensation for the withholding exemption cannot be readily determined, W can accept the statement on Form 8233 and exempt from withholding the appropriate amount of E's income.

(iv) *Acceptance by withholding agent.* If after the review described in paragraph (b)(2)(iii) of this section the withholding agent is satisfied that an exemption from withholding is warranted, the withholding agent may accept the statement by making a certification, verified by a declaration

that it is made under the penalties of perjury, on Form 8233. The certification shall be—

(A) That the withholding agent has examined the statement,

(B) That the withholding agent is satisfied that an exemption from withholding is warranted, and

(C) That the withholding agent does not know or have reason to know that the individual's compensation is not entitled to the exemption or that the eligibility of the individual's compensation for the exemption cannot be readily determined.

(v) *Copies of Form 8233.* The withholding agent shall forward one copy of each Form 8233 that is accepted under paragraph (b)(2)(iv) of this section to the Assistant Commissioner (International), within five days of such acceptance. The withholding agent shall retain a copy of Form 8233.

(3) *Withholding agreements.* Compensation for personal services of a nonresident alien individual who is engaged during the taxable year in the conduct of a trade or business within the United States may be wholly or partially exempted from the withholding required by §1.1441–1 if an agreement is reached between the Assistant Commissioner (International) and the alien individual with respect to the amount of withholding required. Such agreement shall be available in the circumstances and in the manner set forth by the Internal Revenue Service, and shall be effective for payments covered by the agreement that are made after the agreement is executed by all parties. The alien individual must agree to timely file an income tax return for the current taxable year.

(4) *Final payment exemption*—(i) *General rule.* Compensation for independent personal services of a nonresident alien individual who is engaged during the taxable year in the conduct of a trade or business within the United States may be wholly or partially exempted from the withholding required by §1.1441–1 from the final payment of compensation for independent personal services. This exemption does not apply to wages. This exemption from withholding is available only once during an alien individual's taxable year and is obtained by the alien individual presenting to the withholding agent a letter in duplicate from a district director stating the amount of compensation subject to the exemption and the amount that would otherwise be withheld from such final payment under section 1441 that shall be paid to

the alien individual due to the exemption. The alien individual shall attach a copy of the letter to his or her income tax return for the taxable year for which the exemption is effective.

(ii) *Final payment of compensation for personal services.* For purposes of this paragraph, final payment of compensation for personal services means the last payment of compensation, other than wages, for personal services rendered within the United States that the individual expects to receive from any withholding agent during the taxable year.

(iii) *Manner of applying for final payment exemption.* In order to obtain the final payment exemption provided by paragraph (b)(4)(i) of this section, the nonresident alien individual (or his or her agent) must file the forms and provide the information required by the district director. Ordinary and necessary business expenses may be taken into account if substantiated to the satisfaction of the district director. The alien individual must submit a statement, signed by him or her and verified by a declaration that it is made under the penalties of perjury, that all the information provided is true and that to his or her knowledge no relevant information has been omitted. The information required to be submitted includes, but is not limited to—

(A) A statement by each withholding agent from whom amounts of gross income effectively connected with the conduct of a trade or business within the United States have been received by the alien individual during the taxable year, of the amount of such income paid and the amount of tax withheld, signed and verified by a declaration that it is made under penalties of perjury;

(B) A statement by the withholding agent from whom the final payment of compensation for personal services will be received, of the amount of such final payment and the amount which would be withheld under §1.1441–1 if a final payment exemption under paragraph (b)(4)(i) of this section is not granted, signed and verified by a declaration that it is made under penalties of perjury;

(C) A statement by the individual that he or she does not intend to receive any other amounts of gross income effectively connected with the conduct of a trade or business within the United States during the current taxable year;

(D) The amount of tax which has been withheld (or paid) under any other provision of the Code or regulations with respect to any income effectively connected with the conduct of a trade or business within the United States during the current taxable year;

(E) The amount of any outstanding tax liabilities (and interest and penalties relating thereto) from the current taxable year or prior taxable periods; and

(F) The provision of any income tax treaty under which a partial or complete exemption from withholding may be claimed, the country of the individual's residence, and a statement of sufficient facts to justify an exemption pursuant to such treaty.

(iv) *Letter to withholding agent.* If the district director is satisfied that the information provided under paragraph (b)(4)(iii) of this section is sufficient, the district director will, after coordination with the Director of the Foreign Operations District, ascertain the amount of the alien individual's tentative income tax for the taxable year with respect to gross income that is effectively connected with the conduct of a trade or business within the United States. After the tentative tax has been ascertained, the district director will provide the alien individual with a letter to the withholding agent stating the amount of the final payment of compensation for personal services that is exempt from withholding, and the amount that would otherwise be withheld under section 1441 that shall be paid to the alien individual due to the exemption. The amount of compensation for personal services exempt from withholding under this paragraph (b)(4) shall not exceed $5,000.

Example 1. On July 15, 1983, B, a non-resident alien individual, appears before a district director with the information required by paragraph (b)(4)(iii) of this section. B has received personal service income in 1983 from which $3,000 has been withheld under section 1441. On August 1, 1983, B will receive $5,000 in personal service income from W. B does

not intend to receive any other income subject to U.S. tax during 1983. Taking into account B's substantiated deductible business expenses, the district director computes the tentative tax liability on B's income effectively connected with the conduct of a trade or business in the United States during 1983 (including the $5,000 payment to be made on August 1, 1983) to be $3,300. B does not owe U.S. tax for any other taxable periods. The amount of B's final payment exemption is determined as follows:

(*1*) The amount of total withholding is $4,500 ($3,000 previously withheld plus $1,500, 30% of the $5,000 final payment);

(*2*) The amount of tentative excess withholding is $1,200 (total withholding of $4,500 minus B's tentative tax liability of $3,300); and

(*3*) To allow B to receive $1,200 of the amount which would otherwise have been withheld from the final payment, the district director allows a withholding exemption for $4,000 of B's final payment. W must withhold $300 from the final payment.

Example 2. The facts are the same as in Example 1 except B will receive a final payment of compensation on August 1, 1983, in the amount of $10,000 and B's tentative tax liability is $3,900. The amount of B's final payment exemption is determined as follows:

(*1*) The amount of total withholding is $6,000 ($3,000 previously withheld plus $3,000, 30% of the $10,000 final payment);

(*2*) The amount of tentative excess withholding is $2,100 (total withholding of $6,000 minus B's tentative tax liability of $3,900); and

(*3*) To allow B to receive $2,100 of the amount which would otherwise be withheld from the final payment, $7,000 of the final payment would have to be exempt from withholding; however, as no more than $5,000 of the final payment can be exempt from withholding under this paragraph (b)(4), the district director allows a withholding exemption for $5,000 of B's final payment. B must file a claim for refund at the end of the taxable year to obtain a refund of $600. W must withhold $1,500 from the final payment.

(5) *Requirement of return.* The tentative tax determined by the district director under paragraph (b)(4)(iv) of this section or by the Director of the Foreign Operations District under the withholding agreement procedure of paragraph (b)(3) of this section shall not constitute a final determination of the income tax liability of the nonresident alien individual, nor shall such determination constitute a tax return of the nonresident alien individual for any taxable period. An alien individual who applies for or obtains an exemption from withholding under the procedures of paragraphs (b) (2), (3), or (4) of this section is not relieved of the obligation to file a return of income under section 6012.

(6) *Personal exemption*—(i) *In general.* To determine the tax to be withheld at source under §1.1441–1 from remuneration paid for personal services performed within the United States by a nonresident alien individual and from scholarship and fellowship income described in paragraph (c) of this section, a withholding agent may take into account one personal exemption pursuant to sections 873(b)(3) and 151 regardless of whether the income is effectively connected. For purposes of withholding under section 1441 on remuneration for personal services, the exemption must be prorated upon a daily basis for the period during which the personal services are performed within the United States by the nonresident alien individual by dividing by 365 the number of days in the period during which the individual is present in the United States for the purpose of performing the services and multiplying the result by the amount of the personal exemption in effect for the taxable year. See §31.3402(f)(6)–1 of this chapter.

(ii) *Multiple exemptions.* More than one personal exemption may be claimed in the case of a resident of a contiguous country or a national of the United States under section 873(b)(3). In addition, residents of a country with which the United States has an income tax treaty in effect may be eligible to claim more than one personal exemption if the treaty so provides. Claims for more than one personal exemption shall be made on the withholding certificate furnished to the withholding agent. The exemption must be prorated on a daily basis in the same manner as described in paragraph (b)(6)(i) of this section.

(iii) *Special rule where both certain scholarship and compensation income are received.* The fact that both non-compensatory scholarship income and compensation income (including compensatory scholarship income) are received during the taxable year does not entitle the taxpayer to claim more than one personal exemption amount (or more than the additional amounts

permitted under paragraph (b)(6)(ii) of this section). Thus, if a nonresident alien student receives non-compensatory taxable scholarship income from one withholding agent and compensation income from another withholding agent, no more than the total personal exemption amount permitted under the Internal Revenue Code or under an income tax treaty may be taken into account by both withholding agents. For this purpose, the withholding agent may rely on a representation from the beneficial owner that the exemption amount claimed does not exceed the amount permissible under this section.

(c) *Special rules for scholarship and fellowship income*—(1) *In general.* Under section 871(c), certain amounts paid as a scholarship or fellowship for study, training, or research in the United States to a nonresident alien individual temporarily present in the United States as a nonimmigrant under section 101(a)(15) (F), (J), (M), or (Q) of the Immigration and Nationality Act are treated as income effectively connected with the conduct of a trade or business within the United States. The amounts described in the preceding sentence are those amounts that do not represent compensation for services. Such amounts (as described in the second sentence of section 1441(b)) are subject to withholding under section 1441, but at the lower rate of 14 percent. That rate may be reduced under the provisions of an income tax treaty. Claims of a reduced rate under an income tax treaty shall be made under the procedures described in § 1.1441–6(b)(1). Therefore, claims for reduction in withholding under an income tax treaty on amounts described in this paragraph (c)(1) may not be made on a Form 8233. However, if the payee is receiving both compensation for personal services (including compensatory scholarship income) and non-compensatory scholarship income described in this paragraph (c)(1) from the same withholding agent, claims for reduction of withholding on both types of income may be made on Form 8233.

(2) *Alternate withholding election.* A withholding agent may elect to withhold on the amounts described in paragraph (c)(1) of this section at the rates applicable under section 3402, as if the income were wages. Such election shall be made by obtaining a Form W–4 (or an acceptable substitute or such other form as the IRS may prescribe) from the beneficial owner. The fact that the withholding agent asks the beneficial owner to furnish a Form W–4 for such fellowship or scholarship income or to take such income into account in preparing such Form W–4 shall serve as notice to the beneficial owner that the income is being treated as wages for purposes of withholding tax under section 1441.

(d) *Annuities received under qualified plans.* Withholding is not required under section § 1.1441–1 in the case of any amount received as an annuity if the amount is exempt from tax under section 871(f) and the regulations under that section. The withholding agent may exempt the payment from withholding if, prior to payment, it can reliably associate the payment with documentation upon which it can rely to treat the payment as made to a beneficial owner in accordance with § 1.1441–1(e)(1)(ii). A beneficial owner withholding certificate furnished for purposes of claiming the benefits of the exemption under this paragraph (d) is valid only if, in addition to other applicable requirements, it contains a taxpayer identifying number.

(e) *Per diem of certain alien trainees.* Withholding is not required under section 1441(a) and § 1.1441–1 on per diem amounts paid for subsistence by the United States Government (directly or by contract) to any nonresident alien individual who is engaged in any program of training in the United States under the Mutual Security Act of 1954, as amended (22 U.S.C. chapter 24). This rule shall apply even though such amounts are subject to tax under section 871. Any exemption from withholding pursuant to this paragraph (e) applies without a requirement that documentation be furnished to the withholding agent. However, documentation may have to be furnished for purposes of the information reporting provisions under section 6041 and backup withholding under section 3406. The exemption from withholding granted by this paragraph (e) is not a determination that the amounts are

not fixed or determinable annual or periodical income.

(f) *Failure to receive withholding certificates timely or to act in accordance with applicable presumptions.* See applicable procedures described in § 1.1441–1(b)(7) in the event the withholding agent does not hold an appropriate withholding certificate or other appropriate documentation at the time of payment or does not act in accordance with applicable presumptions described in paragraph (a) (2)(i), (2)(ii), or (3) of this section.

(g) *Effective date*—(1) *General rule.* This section applies to payments made after December 31, 2000.

(2) *Transition rules.* The validity of a Form 4224 or 8233 that was valid on January 1, 1998, under the regulations in effect prior to January 1, 2001 (see 26 CFR part 1, revised April 1, 1999) and expired, or will expire, at any time during 1998, is extended until December 31, 1998. The validity of a Form 4224 or 8233 that is valid on or after January 1, 1999, remains valid until its validity expires under the regulations in effect prior to January 1, 2001 (see 26 CFR part 1, revised April 1, 1999) but in no event will such form remain valid after December 31, 2000. The rule in this paragraph (g)(2), however, does not apply to extend the validity period of a Form 4224 or 8223 that expires solely by reason of changes in the circumstances of the person whose name is on the certificate. Notwithstanding the first three sentences of this paragraph (g)(2), a withholding agent may choose to not take advantage of the transition rule in this paragraph (g)(2) with respect to one or more withholding certificates valid under the regulations in effect prior to January 1, 2001 (see 26 CFR part 1, revised April 1, 1999) and, therefore, to require withholding certificates conforming to the requirements described in this section (new withholding certificates). For purposes of this section, a new withholding certificate is deemed to satisfy the documentation requirement under the regulations in effect prior to January 1, 2001 (see 26 CFR part 1, revised April 1, 1999). Further, a new withholding certificate remains valid for the period specified in § 1.1441–1(e)(4)(ii), regardless of when the certificate is obtained.

[T.D. 6500, 25 FR 12075, Nov. 26, 1960]

EDITORIAL NOTE: For FEDERAL REGISTER citations affecting § 1.1441–4, see the List of Sections Affected in the Finding Aids section of this volume.

§ 1.1441–5 Withholding on payments to partnerships, trusts, and estates.

(a) *In general.* This section describes the rules that apply to payments made to partnerships, trusts, and estates. Paragraph (b) of this section prescribes the rules that apply to a withholding agent making a payment to a U.S. partnership, trust, or estate. It also prescribes the obligations of a U.S. partnership, trust, or estate that makes a payment to a foreign partner, beneficiary, or owner. Paragraph (c) of this section prescribes rules that apply to a withholding agent that makes a payment to a foreign partnership. Paragraph (d) of this section provides presumption rules that apply to payments made to foreign partnerships. Paragraph (e) of this section prescribes rules, including presumption rules, that apply to a withholding agent that makes a payment to a foreign trust or foreign estate.

(b) *Rules applicable to U.S. partnerships, trusts, and estates*—(1) *Payments to U.S. partnerships, trusts, and estates.* No withholding is required under section 1.1441–1(b)(1) on a payment of an amount subject to withholding (as defined in § 1.1441–2(a)) that a withholding agent may treat as made to a U.S. payee. Therefore, if a withholding agent can reliably associate (within the meaning of § 1.1441–2(b)(vii)) a Form W–9 provided in accordance with § 1.1441–1(d)(2) or (4) by a U.S. partnership, U.S. trust, or a U.S. estate the withholding agent may treat the payment as made to a U.S. payee and the payment is not subject to withholding under section 1441 even though the partnership, trust, or estate may have foreign partners, beneficiaries, or owners. A withholding agent is also not required to withhold under section 1441 on a payment it makes to an entity presumed to be a U.S. payee under paragraphs (d)(2) and (e)(6)(ii) of this section.

(2) *Withholding by U.S. payees*—(i) *U.S. partnerships*—(A) *In general.* A U.S. partnership is required to withhold under § 1.1441–1 as a withholding agent on an amount subject to withholding (as defined in § 1.1441–2(a)) that is includible in the gross income of a partner that is a foreign person. Subject to paragraph (b)(2)(v) of this section, a U.S. partnership shall withhold when any distributions that include amounts subject to withholding (including guaranteed payments made by a U.S. partnership) are made. To the extent a foreign partner's distributive share of income subject to withholding has not actually been distributed to the foreign partner, the U.S. partnership must withhold on the foreign partner's distributive share of the income on the earlier of the date that the statement required under section 6031(b) is mailed or otherwise provided to the partner or the due date for furnishing the statement.

(B) *Effectively connected income of partners.* Withholding on items of income that are effectively connected income in the hands of the partners who are foreign persons is governed by section 1446 and not by this section. In such a case, partners in a domestic partnership are not required to furnish a withholding certificate in order to claim an exemption from withholding under section 1441(c)(1) and § 1.1441–4.

(ii) *U.S. simple trusts.* A U.S. trust that is described in section 651(a) (a U.S. simple trust) is required to withhold under chapter 3 of the Internal Revenue Code as a withholding agent on the distributable net income includible in the gross income of a foreign beneficiary to the extent the distributable net income is an amount subject to withholding (as defined in § 1.1441–2(a)). A U.S. simple trust shall withhold when a distribution is made to a foreign beneficiary. The U.S. trust may make a reasonable estimate of the portion of the distribution that constitutes distributable net income consisting of an amount subject to withholding and apply the appropriate rate of withholding to the estimated amount. If, at the end of the taxable year in which the distribution is made, the U.S. simple trust determines that it underwithheld under section 1441 or 1442, the trust shall be liable as a withholding agent for the amount under withheld under section 1461. No penalties shall be imposed for failure to withhold and deposit the tax if the U.S. simple trust's estimate was reasonable and the trust pays the underwithheld amount on or before the due date of Form 1042 under section 1461. Any payment of underwithheld amounts by the U.S. simple trust shall not be treated as income subject to additional withholding even if that amount is treated as additional income to the foreign beneficiary, unless the additional amount is income to the foreign beneficiary as a result of a contractual arrangement between the parties regarding the satisfaction of the foreign beneficiary's tax liability. To the extent a U.S. simple trust is required to, but does not, distribute such income to a foreign beneficiary, the U.S. trust must withhold on the foreign beneficiary's allocable share at the time the income is required (without extension) to be reported on Form 1042-S under § 1.1461–1(c).

(iii) *U.S. complex trusts and U.S. estates.* A U.S. trust that is not a trust described in section 651(a) (a U.S. complex trust) is required to withhold under chapter 3 of the Internal Revenue Code as a withholding agent on the distributable net income includible in the gross income of a foreign beneficiary to the extent the distributable net income consists of an amount subject to withholding (as defined in § 1.1441–2(a)) that is, or is required to be, distributed currently. The U.S. complex trust shall withhold when a distribution is made to a foreign beneficiary. The trust may use the same procedures regarding an estimate of the amount subject to withholding as a U.S. simple trust under paragraph (b)(2)(ii) of this section. To the extent an amount subject to withholding is required to be, but is not actually distributed, the U.S. complex trust must withhold on the foreign beneficiary's allocable share at the time the income is required to be reported on Form 1042-S under § 1.1461–1(c), without extension. A U.S. estate is required to withhold under chapter 3 of the Internal Revenue Code on the distributable net income includible in the gross income of

a foreign beneficiary to the extent the distributable net income consists of an amount subject to withholding (as defined in §1.1441–2(a)) that is actually distributed. A U.S. estate may also use the reasonable estimate procedures of paragraph (b)(2)(ii) of this section. However, those procedures apply to an estate that has a taxable year other than a calendar year only if the estate files an amended return on Form 1042 for the calendar year in which the distribution was made and pays the underwithheld tax and interest within 60 days after the close of the taxable year in which the distribution was made.

(iv) *U.S. grantor trusts.* A U.S. trust that is described in section 671 through 679 (a U.S. grantor trust) must withhold on any income includible in the gross income of a foreign person that is treated as an owner of the grantor trust to the extent the amount includible consists of an amount that is subject to withholding (as described in §1.1441–2(a)). The withholding must occur at the time the income is received by, or credited to, the trust.

(v) *Subsequent distribution.* If a U.S. partnership or U.S. trust withholds on a foreign partner, beneficiary, or owner's share of an amount subject to withholding before the amount is actually distributed to the partner, beneficiary, or owner, withholding is not required when the amount is subsequently distributed.

(c) *Foreign partnerships*—(1) *Determination of payee*—(i) *Payments treated as made to partners.* Except as otherwise provided in paragraph (c)(1)(ii) of this section, the payees of a payment to a person that the withholding agent may treat as a nonwithholding foreign partnership under paragraph (c)(3)(i) or (d)(2) of this section are the partners (looking through partners that are foreign intermediaries or flow-through entities) as follows—

(A) If the withholding agent can reliably associate a partner's distributive share of the payment with a valid Form W–9 provided under §1.1441–1(d), the partner is a U.S. payee;

(B) If the withholding agent can reliably associate a partner's distributive share of the payment with a valid Form W–8, or other appropriate documentation, provided under §1.1441–1(e)(1)(ii), the partner is a payee that is a foreign beneficial owner;

(C) If the withholding agent can reliably associate a partner's distributive share of the payment with a qualified intermediary withholding certificate under §1.1441–1(e)(3)(ii), a nonqualified intermediary withholding certificate under §1.1441–1(e)(3)(iii), or a U.S. branch certificate under §1.1441–1(e)(3)(v), then the rules of §1.1441–1(b)(2)(v) shall apply to determine who the payee is in the same manner as if the partner's distributive share of the payment had been paid directly to such intermediary or U.S. branch;

(D) If the withholding agent can reliably associate the partner's distributive share with a withholding foreign partnership certificate under paragraph (c)(2)(iv) of this section or a nonwithholding foreign partnership certificate under paragraph (c)(3)(iii) of this section, then the rules of this paragraph (c)(1)(i) or paragraph (c)(1)(ii) of this section shall apply to determine whether the payment is treated as made to the partners of the higher-tier partnership under this paragraph (c)(1)(i) or to the higher-tier partnership itself (under the rules of paragraph (c)(1)(ii) of this section) in the same manner as if the partner's distributive share of the payment had been paid directly to the higher-tier foreign partnership;

(E) If the withholding agent can reliably associate the partner's distributive share with a withholding certificate described in paragraph (e) of this section regarding a foreign trust or estate, then the rules of paragraph (e) of this section shall apply to determine who the payees are; and

(F) If the withholding agent cannot reliably associate the partner's distributive share with a withholding certificate or other appropriate documentation, the partners are considered to be the payees and the presumptions described in paragraph (d)(3) of this section shall apply to determine their classification and status.

(ii) *Payments treated as made to the partnership.* A payment to a person that the withholding agent may treat as a foreign partnership is treated as a

payment to the foreign partnership and not to its partners only if—

(A) The withholding agent can reliably associate the payment with a withholding certificate described in paragraph (c)(2)(iv) of this section (withholding certificate of a withholding foreign partnership);

(B) The withholding agent can reliably associate the payment with a withholding certificate described in paragraph (c)(3)(iii) of this section (nonwithholding foreign partnership) certifying that the payment is income that is effectively connected with the conduct of a trade or business in the United States; or

(C) The withholding agent can treat the income as effectively connected income under the presumption rules of § 1.1441–4(a)(2)(ii) or (3)(i).

(iii) *Rules for reliably associating a payment with documentation.* For rules regarding the reliable association of a payment with documentation, see § 1.1441–1(b)(2)(vii). In the absence of documentation, see §§ 1.1441–1(b)(3) and 1.6049–5(d) and paragraphs (d) and (e)(6) of this section for applicable presumptions.

(iv) *Examples.* The rules of paragraphs (c)(1)(i) and (ii) of this section are illustrated by the following examples:

Example 1. FP is a nonwithholding foreign partnership organized in Country X. FP has two partners, FC, a foreign corporation, and USP, a U.S. partnership. USWH, a U.S. withholding agent, makes a payment of U.S. source interest to FP. FP has provided USWH with a valid nonwithholding foreign partnership certificate, as described in paragraph (c)(3)(iii) of this section, with which it associates a beneficial owner withholding certificate from FC and a Form W–9 from USP together with the withholding statement required by paragraph (c)(3)(iv) of this section. USWH can reliably associate the payment of interest with the withholding certificates from FC and USP. Under paragraph (c)(1)(i) of this section, the payees of the interest payment are FC and USP.

Example 2. The facts are the same as in *Example 1,* except that FP1, a nonwithholding foreign partnership, is a partner in FP rather than USP. FP1 has two partners, A and B, both foreign persons. FP provides USWH with a valid nonwithholding foreign partnership certificate, as described in paragraph (c)(3)(iii) of this section, with which it associates a beneficial owner withholding certificate from FC and a nonwithholding foreign partnership certificate from FP1. In addition, foreign beneficial owner withholding certificates from A and B are associated with the nonwithholding foreign partnership withholding certificate from FP1. FP also provides the withholding statement required by paragraph (c)(3)(iv) of this section. USWH can reliably associate the interest payment with the withholding certificates provided by FC, A, and B. Therefore, under paragraph (c)(1)(i) of this section, the payees of the interest payment are FC, A, and B.

Example 3. USWH makes a payment of U.S. source dividends to WFP, a withholding foreign partnership. WFP has two partners, FC1 and FC2, both foreign corporations. USWH can reliably associate the payment with a valid withholding foreign partnership withholding certificate from WFP. Therefore, under paragraph (c)(1)(ii)(A) of this section, WFP is the payee of the dividends.

Example 4. USWH makes a payment of U.S. source royalties to FP, a foreign partnership. USWH can reliably associate the royalties with a valid withholding certificate from FP on which FP certifies that the income is effectively connected with the conduct of a trade or business in the United States. Therefore, under paragraph (c)(1)(ii)(B) of this section, FP is the payee of the royalties.

(2) *Withholding foreign partnerships*—(i) *Reliance on claim of withholding foreign partnership status.* A withholding foreign partnership is a foreign partnership that has entered into an agreement with the Internal Revenue Service (IRS), as described in paragraph (c)(2)(ii) of this section, with respect to distributions and guaranteed payments it makes to its partners. A withholding agent that can reliably associate a payment with a certificate described in paragraph (c)(2)(iv) of this section may treat the person to whom it makes the payment as a withholding foreign partnership for purposes of withholding under chapter 3 of the Internal Revenue Code, information reporting under chapter 61 of the Internal Revenue Code, backup withholding under section 3406, and withholding under other provisions of the Internal Revenue Code. Furnishing such a certificate is in lieu of transmitting to a withholding agent withholding certificates or other appropriate documentation for its partners. Although the withholding foreign partnership generally will be required to obtain withholding certificates or other appropriate documentation from its partners pursuant to its agreement with the IRS, it will generally not be required to attach such

documentation to its withholding foreign partnership withholding certificate. A foreign partnership may act as a qualified intermediary under § 1.1441–1(e)(5) with respect to payments it makes to persons other than its partners. In addition, the IRS may permit a foreign partnership to act as a qualified intermediary under § 1.1441–1(e)(5)(ii)(D) with respect to its partners in appropriate circumstances.

(ii) *Withholding agreement.* The IRS may, upon request, enter into a withholding agreement with a foreign partnership pursuant to such procedures as the IRS may prescribe in published guidance (see § 601.601(d)(2) of this chapter). Under the withholding agreement, a foreign partnership shall generally be subject to the applicable withholding and reporting provisions applicable to withholding agents and payors under chapters 3 and 61 of the Internal Revenue Code, section 3406, the regulations under those provisions, and other withholding provisions of the Internal Revenue Code, except to the extent provided under the agreement. Under the agreement, a foreign partnership may agree to act as an acceptance agent to perform the duties described in § 301.6109–1(d)(3)(iv)(A) of this chapter. The agreement may specify the manner in which applicable procedures for adjustments for underwithholding and overwithholding, including refund procedures, apply to the withholding foreign partnership and its partners and the extent to which applicable procedures may be modified. In particular, a withholding agreement may allow a withholding foreign partnership to claim refunds of overwithheld amounts on behalf of its customers. In addition, the agreement must specify the manner in which the IRS will audit the foreign partnership's books and records in order to verify the partnership's compliance with its agreement. A withholding foreign partnership must file a return on Form 1042 and information returns on Form 1042–S. The withholding foreign partnership agreement may also require a withholding foreign partnership to file a partnership return under section 6031(a) and partner statements under 6031(b).

(iii) *Withholding responsibility*. A withholding foreign partnership must assume primary withholding responsibility under chapter 3 of the Internal Revenue Code. It is not required to provide information to the withholding agent regarding each partner's distributive share of the payment. The withholding foreign partnership will be responsible for reporting the payments under § 1.1461–1(c) and chapter 61 of the Internal Revenue Code. A withholding agent making a payment to a withholding foreign partnership is not required to withhold any amount under chapter 3 of the Internal Revenue Code on a payment to the withholding foreign partnership, unless it has actual knowledge or reason to know that the foreign partnership is not a withholding foreign partnership. The withholding foreign partnership shall withhold the payments under the same procedures and at the same time as prescribed for withholding by a U.S. partnership under paragraph (b)(2) of this section, except that, for purposes of determining the partner's status, the provisions of paragraph (d)(4) of this section shall apply.

(iv) *Withholding certificate from a withholding foreign partnership.* The rules of § 1.1441–1(e)(4) shall apply to withholding certificates described in this paragraph (c)(2)(iv). A withholding certificate furnished by a withholding foreign partnership is valid with regard to any partner on whose behalf the certificate is furnished only if it is furnished on a Form W–8, an acceptable substitute form, or such other form as the IRS may prescribe, it is signed under penalties of perjury by a partner with authority to sign for the partnership, its validity has not expired, and it contains the information, statement, and certifications described in this paragraph (c)(2)(iv) as follows—

(A) The name, permanent residence address (as described in § 1.1441–1(e)(2)(ii)), and the employer identification number of the partnership, and the country under the laws of which the partnership is created or governed;

(B) A certification that the partnership is a withholding foreign partnership within the meaning of paragraph (c)(2)(i) of this section; and

(C) Any other information, certifications or statements as may be required by the withholding foreign partnership agreement with the IRS or the form or accompanying instructions in addition to, or in lieu of, the information, statements, and certifications described in this paragraph (c)(2)(iv).

(3) *Nonwithholding foreign partnerships*—(i) *Reliance on claim of foreign partnership status.* A withholding agent may treat a person as a nonwithholding foreign partnership if it receives from that person a nonwithholding foreign partnership withholding certificate as described in paragraph (c)(3)(iii) of this section. A withholding agent that does not receive a nonwithholding foreign partnership withholding certificate, or does not receive a valid withholding certificate, from an entity it knows, or has reason to know, is a foreign partnership, must apply the presumption rules of §§ 1.1441–1(b)(3) and 1.6049–5(d) and paragraphs (d) and (e)(6) of this section. In addition, to the extent a withholding agent cannot, prior to a payment, reliably associate the payment with valid documentation from a payee that is associated with the nonwithholding foreign partnership withholding certificate or has insufficient information to report the payment on Form 1042–S or Form 1099, to the extent reporting is required, must also apply the presumption rules. See § 1.1441–1(b)(2)(vii)(A) and (B) for rules regarding reliable association. See paragraph (c)(3)(iv) of this section and § 1.1441–1(e)(3)(iv) for alternative procedures permitting allocation information to be received after a payment is made.

(ii) *Reliance on claim of reduced withholding by a partnership for its partners.* This paragraph (c)(3)(ii) describes the manner in which a withholding agent may rely on a claim of reduced withholding when making a payment to a nonwithholding foreign partnership. To the extent that a withholding agent treats a payment to a nonwithholding foreign partnership as a payment to the nonwithholding foreign partnership's partners (whether direct or indirect) in accordance with paragraph (c)(1)(i) of this section, it may rely on a claim for reduced withholding by the partner if, prior to the payment, the withholding agent can reliably associate the payment (within the meaning of § 1.1441–1(b)(2)(vii)) with a valid withholding certificate or other appropriate documentation from the partner that establishes entitlement to a reduced rate of withholding. A withholding certificate or other appropriate documentation that establishes entitlement to a reduced rate of withholding is a beneficial owner withholding certificate described in § 1.1441–1(e)(2)(i), documentary evidence described in § 1.1441–6(c)(3) or (4) or 1.6049–5(c)(1) (for a partner claiming to be a foreign person and a beneficial owner, determined under the provisions of § 1.1441–1(c)(6)), a Form W–9 described in § 1.1441–1(d) (for a partner claiming to be a U.S. payee), or a withholding foreign partnership withholding certificate described in paragraph (c)(2)(iv) of this section. Unless a nonwithholding foreign partnership withholding certificate is provided for income claimed to be effectively connected with the conduct of a trade or business in the United States, a claim must be presented for each portion of the payment that represents an item of income includible in the distributive share of a partner as required under paragraph (c)(3)(iii)(C) of this section. When making a claim for several partners, the partnership may present a single nonwithholding foreign partnership withholding certificate to which the partners' certificates or other appropriate documentation are associated. Where the nonwithholding foreign partnership withholding certificate is provided for income claimed to be effectively connected with the conduct of a trade or business in the United States under paragraph (c)(3)(iii)(D) of this section, the claim may be presented without having to identify any partner's distributive share of the payment.

(iii) *Withholding certificate from a nonwithholding foreign partnership.* A nonwithholding foreign partnership shall provide a nonwithholding foreign partnership withholding certificate with respect to reportable amounts received by the nonwithholding foreign partnership. A nonwithholding foreign partnership withholding certificate is valid only to the extent it is furnished on a

Form W–8 (or an acceptable substitute form or such other form as the IRS may prescribe), it is signed under penalties of perjury by a partner with authority to sign for the partnership, its validity has not expired, and it contains the information, statements, and certifications described in this paragraph (c)(3)(iii) and paragraph (c)(3)(iv) of this section, and the withholding certificates and other appropriate documentation for all the persons to whom the certificate relates are associated with the certificate. The rules of §1.1441–1(e)(4) shall apply to withholding certificates described in this paragraph (c)(3)(iii). No withholding certificates or other appropriate documentation from persons who derive income through a partnership (whether or not U.S. exempt recipients) are required to be associated with the nonwithholding foreign partnership withholding certificate if the certificate is furnished solely for income claimed to be effectively connected with the conduct of a trade or business in the United States. Withholding certificates and other appropriate documentation that may be associated with the nonwithholding foreign partnership withholding certificate consist of beneficial owner withholding certificates under §1.1441–1(e)(2)(i), intermediary withholding certificates under §1.1441–1(e)(3)(i), withholding foreign partnership withholding certificates under paragraph (c)(2)(iv) of this section, nonwithholding foreign partnership withholding certificates under this paragraph (c)(3)(iii), withholding certificates from foreign trusts or estates under paragraph (e) of this section, documentary evidence described in §1.1441–6(c)(3) or (4) or documentary evidence described in §1.6049–5(c)(1), and any other documentation or certificates applicable under other provisions of the Internal Revenue Code or regulations that certify or establish the status of the payee or beneficial owner as a U.S. or a foreign person. Nothing in this paragraph (c)(3)(iii) shall require a nonwithholding foreign partnership to furnish original documentation. Copies of certificates or documentary evidence may be transmitted to the U.S. withholding agent, in which case the nonwithholding foreign partnership must retain the original documentation for the same time period that the copy is required to be retained by the withholding agent under §1.1441–1(e)(4)(iii) and must provide it to the withholding agent upon request. The information, statement, and certifications required on the withholding certificate are as follows—

(A) The name, permanent residence address (as described in §1.1441–1(e)(2)(ii)), and the employer identification number of the partnership, if any, and the country under the laws of which the partnership is created or governed;

(B) A certification that the person whose name is on the certificate is a foreign partnership;

(C) A withholding statement associated with the nonwithholding foreign partnership withholding certificate that provides all of the information required by paragraph (c)(3)(iv) of this section and §1.1441–1(e)(3)(iv). No withholding statement is required, however, for a nonwithholding foreign partnership withholding certificate furnished for income claimed to be effectively connected with the conduct of a trade or business in the United States;

(D) A certification that the income is effectively connected with the conduct of a trade or business in the United States, if applicable; and

(E) Any other information, certifications, or statements required by the form or accompanying instructions in addition to, or in lieu of, the information and certifications described in this paragraph (c)(3)(iii).

(iv) *Withholding statement provided by nonwithholding foreign partnership.* The provisions of §1.1441–1(e)(3)(iv) (regarding a withholding statement) shall apply to a nonwithholding foreign partnership by substituting the term nonwithholding foreign partnership for the term nonqualified intermediary.

(v) *Withholding and reporting by a foreign partnership.* A nonwithholding foreign partnership described in this paragraph (c)(3) that receives an amount subject to withholding (as defined in §1.1441–2(a)) shall be required to withhold and report such payment under chapter 3 of the Internal Revenue Code and the regulations thereunder except

as otherwise provided in this paragraph (c)(3)(v). A nonwithholding foreign partnership shall not be required to withhold and report if it has provided a valid nonwithholding foreign partnership withholding certificate, it has provided all of the information required by paragraph (c)(3)(iv) of this section (withholding statement), and it does not know, and has no reason to know, that another withholding agent failed to withhold the correct amount or failed to report the payment correctly under § 1.1461–1(c). A withholding foreign partnership's obligations to withhold and report shall be determined in accordance with its withholding foreign partnership agreement.

(d) *Presumption rules*—(1) *In general.* This paragraph (d) contains the applicable presumptions for a withholding agent (including a partnership) to determine the classification and status of a partnership and its partners in the absence of documentation. The provisions of § 1.1441–1(b)(3)(iv) (regarding the 90-day grace period) and § 1.1441–1(b)(3)(vii) through (ix) shall apply for purposes of this paragraph (d).

(2) *Determination of partnership status as U.S. or foreign in the absence of documentation.* In the absence of a valid representation of U.S. partnership status in accordance with paragraph (b)(1) of this section or of foreign partnership status in accordance with paragraph (c)(2)(i) or (3)(i) of this section, the withholding agent shall determine the classification of the payee under the presumptions set forth in § 1.1441–1(b)(3)(ii). If the withholding agent treats the payee as a partnership under § 1.1441–1(b)(3)(ii), the withholding agent shall presume the partnership to be a U.S. partnership unless there are indicia of foreign status. If there are indicia of foreign status, the withholding agent may presume the partnership to be foreign. Indicia of foreign status exist only if the withholding agent has actual knowledge of the payee's employer identification number and that number begins with the two digits ''98,'' the withholding agent's communications with the payee are mailed to an address in a foreign country, or the payment is made outside the United States (as defined in § 1.6049–5(e)). For rules regarding reliable association with a withholding certificate from a domestic or a foreign partnership, see § 1.1441–1(b)(2)(vii).

(3) *Determination of partners' status in the absence of certain documentation.* If a nonwithholding foreign partnership has provided a nonwithholding foreign partnership withholding certificate under paragraph (c)(3)(iii) of this section that would be valid except that the withholding agent cannot reliably associate all or a portion of the payment with valid documentation from a partner of the partnership, then the withholding agent may apply the presumption rule of this paragraph (d)(3) with respect to all or a portion of the payment for which documentation has not been received. See § 1.1441–1(b)(2)(vii)(A) and (B) for rules regarding reliable association. The presumption rule of this paragraph (d)(3) also applies to a person that is presumed to be a foreign partnership under the rule of paragraph (d)(2) of this section. Any portion of a payment that the withholding agent cannot treat as reliably associated with valid documentation from a partner may be presumed made to a foreign payee. As a result, any payment of an amount subject to withholding is subject to withholding at a rate of 30 percent. Any payment that is presumed to be made to an undocumented foreign payee must be reported on Form 1042–S. See § 1.1461–1(c).

(4) *Determination by a withholding foreign partnership of the status of its partners.* A withholding foreign partnership shall determine whether the partners or some other persons are the payees of the partners' distributive shares of any payment made by a withholding foreign partnership by applying the rules of § 1.1441–1(b)(2), paragraph (c)(1) of this section (in the case of a partner that is a foreign partnership), and paragraph (e)(3) of this section (in the case of a partner that is a foreign estate or a foreign trust). Further, the provisions of paragraph (d)(3) of this section shall apply to determine the status of partners and the applicable withholding rates to the extent that, at the time the foreign partnership is required to withhold on a payment, it cannot reliably associate the amount with documentation for any one or more of its partners.

(e) *Foreign trusts and estates*—(1) *In general.* This paragraph (e) provides rules applicable to payments of amounts subject to withholding (as defined in § 1.1441–2(a)) that a withholding agent may treat as made to any foreign trust or a foreign estate. For rules relating to payments to a U.S. trust or a U.S. estate, see paragraph (b) of this section. For the definitions of foreign simple trust, foreign complex trust, and foreign grantor trust, see § 1.1441–1(c)(24), (25), and (26).

(2) *Payments to foreign complex trusts and foreign estates.* Under § 1.1441–1(c)(6)(ii)(D), a foreign complex trust or foreign estate is generally considered to be the beneficial owner of income paid to the foreign complex trust or foreign estate. See paragraph (e)(4) of this section for rules describing when a withholding agent may treat a payment as made to a foreign complex trust or a foreign estate.

(3) *Payees of payments to foreign simple trusts and foreign grantor trusts*—(i) *Payments for which beneficiaries and owners are payees.* For purposes of the regulations under chapters 3 and 61 of the Internal Revenue Code and section 3406, a foreign simple trust is not a beneficial owner or a payee of a payment. Also, a foreign grantor trust (or a portion of a trust that is a foreign grantor trust) is not considered a beneficial owner or a payee of a payment. Except as otherwise provided in paragraph (e)(3)(ii) of this section, the payees of a payment made to a person that the withholding agent may treat as a foreign simple trust or a foreign grantor trust (or a portion of a trust that is a foreign grantor trust) are determined under the rules of this paragraph (e)(3)(i). The payees shall be treated as the beneficial owners if they may be so treated under § 1.1441–1(c)(6)(ii)(C) and they provide documentation supporting their status as the beneficial owners. The payees of a payment to a foreign simple trust or foreign grantor trust are determined as follows—

(A) If the withholding agent can reliably associate a payment with a valid Form W–9 provided under § 1.1441–1(d) from a beneficiary or owner of the foreign trust, then the beneficiary or owner is a U.S. payee;

(B) If the withholding agent can reliably associate a payment with a valid Form W–8, or other appropriate documentation, provided under § 1.1441–1(e)(1)(ii) from a beneficiary or owner of the foreign trust, then the beneficiary or owner is a payee that is a foreign beneficial owner;

(C) If the withholding agent can reliably associate a payment with a qualified intermediary withholding certificate under § 1.1441–1(e)(3)(ii), a nonqualified intermediary withholding certificate under § 1.1441–1(e)(3)(ii), or a U.S. branch withholding certificate under § 1.1441–1(e)(3)(v), then the rules of § 1.1441–1(b)(2)(v) shall apply to determine the payee in the same manner as if the payment had been paid directly to such intermediary or U.S. branch;

(D) If the withholding agent can reliably associate a payment with a withholding foreign partnership withholding certificate under paragraph (c)(2)(iv) of this section or a nonwithholding foreign partnership withholding certificate under paragraph (c)(3)(iii) of this section, then the rules of paragraph (c)(1)(i) or (ii) of this section shall apply to determine the payee;

(E) If the withholding agent can reliably associate the payment with a foreign simple trust withholding certificate or a foreign grantor trust withholding certificate (both described in paragraph (e)(5)(iii) of this section) from a second or higher-tier foreign simple trust or foreign grantor trust, then the rules of this paragraph (e)(3)(i) or paragraph (e)(3)(ii) of this section shall apply to determine whether the payment is treated as made to a beneficiary or owner of the higher-tier trust or to the trust itself in the same manner as if the payment had been made directly to the higher-tier trust; and

(F) If the withholding agent cannot reliably associate a payment with a withholding certificate or other appropriate documentation, the payees shall be determined by applying the presumptions described in paragraph (e)(6) of this section.

(ii) *Payments for which trust is payee.* A payment to a person that the withholding agent may treat as made to a foreign trust under paragraph (e)(5)(iii) of this section is treated as a payment

to the trust, and not to a beneficiary of the trust, only if—

(A) The withholding agent can reliably associate the payment with a foreign complex trust withholding certificate under paragraph (e)(4) of this section;

(B) The withholding agent can reliably associate the payment with a foreign simple trust withholding certificate under paragraph (e)(5)(iii) of this section certifying that the payment is income that is treated as effectively connected with the conduct of a trade or business in the United States; or

(C) The withholding agent can treat the income as effectively connected income under the presumption rules of § 1.1441–4(a)(3)(i).

(4) *Reliance on claim of foreign complex trust or foreign estate status.* A withholding agent may treat a payment as made to a foreign complex trust or a foreign estate if the withholding agent can reliably associate the payment with a beneficial owner withholding certificate described in § 1.1441–1(e)(2)(i) or other documentary evidence under § 1.1441–6(c)(3) or (4) (regarding a claim for treaty benefits) or § 1.6049–5(c)(1) (regarding documentary evidence to establish foreign status for purposes of chapter 61 of the Internal Revenue Code) that establishes the foreign complex trust or foreign estate's status as a beneficial owner. See paragraph (e)(6) of this section for presumption rules if documentation is lacking.

(5) *Foreign simple trust and foreign grantor trust*—(i) *Reliance on claim of foreign simple trust or foreign grantor trust status.* A withholding agent may treat a person as a foreign simple trust or foreign grantor trust if it receives from that person a foreign simple trust or foreign grantor trust withholding certificate as described in paragraph (e)(5)(iii) of this section. A withholding agent must apply the presumption rules of §§ 1.1441–1(b)(3) and 1.6049–5(d) and paragraphs (d) and (e)(6) of this section to the extent it cannot, prior to the payment, reliably associate a payment (within the meaning of § 1.1441–1(b)(2)(vii)) with a valid foreign simple trust or foreign grantor trust withholding certificate, it cannot reliably determine how much of the payment relates to valid documentation provided by a payee (*e.g.*, a person that is not itself a nonqualified intermediary, flow-through entity, or U.S. branch) associated with the foreign simple trust or foreign grantor trust withholding certificate, or it does not have sufficient information to report the payment on Form 1042–S or Form 1099, if reporting is required. See § 1.1441–1(b)(2)(vii)(A) and (B).

(ii) *Reliance on claim of reduced withholding by a foreign simple trust or foreign grantor trust for its beneficiaries or owners.* This paragraph (e)(5)(ii) describes the manner in which a withholding agent may rely on a claim of reduced withholding when making a payment to a foreign simple trust or foreign grantor trust. To the extent that a withholding agent treats a payment to a foreign simple trust or foreign grantor trust as a payment to payees other than the trust in accordance with paragraph (e)(3)(i) of this section, it may rely on a claim for reduced withholding by a beneficiary or owner if, prior to the payment, the withholding agent can reliably associate the payment (within the meaning of § 1.1441–1(b)(2)(vii)) with a valid withholding certificate or other appropriate documentation from a payee or beneficial owner that establishes entitlement to a reduced rate of withholding. A withholding certificate or other appropriate documentation that establishes entitlement to a reduced rate of withholding is a beneficial owner withholding certificate described in § 1.1441–1(e)(2)(i) or documentary evidence described in § 1.1441–6(c)(3) or(4) or in § 1.6049–5(c)(1) (for a beneficiary or owner claiming to be a foreign person and a beneficial owner, determined under the provisions of § 1.1441–1(c)(6)), a Form W–9 described in § 1.1441–1(d) (for a beneficiary or owner claiming to be a U.S. payee), or a withholding foreign partnership withholding certificate described in paragraph (c)(2)(iv) of this section. Unless a foreign simple trust or foreign grantor trust withholding certificate is provided for income treated as income effectively connected with the conduct of a trade or business in the United States, a claim must be presented for each payee's portion of the payment. When making a claim for several payees, the

trust may present a single foreign simple trust or foreign grantor trust withholding certificate with which the payees' certificates or other appropriate documentation are associated. Where the foreign simple trust or foreign grantor trust withholding certificate is provided for income that is treated as effectively connected with the conduct of a trade or business in the United States under paragraph (e)(5)(iii)(D) of this section, the claim may be presented without having to identify any beneficiary's or grantor's distributive share of the payment.

(iii) *Withholding certificate from foreign simple trust or foreign grantor trust.* A withholding certificate furnished by a foreign simple trust or a foreign grantor trust that is not a withholding foreign trust (within the meaning of paragraph (e)(5)(v) of this section) is valid only if it is furnished on a Form W–8, an acceptable substitute form, or such other form as the IRS may prescribe, it is signed under penalties of perjury by a trustee, its validity has not expired, it contains the information, statements, and certifications required by this paragraph (e)(5)(iii) and § 1.1441–1(e)(3)(iv), and the withholding certificates or other appropriate documentation for all of the payees (as determined under paragraph (e)(3)(i) of this section) to whom the certificate relates are associated with the foreign simple trust or foreign grantor trust withholding certificate. The rules of § 1.1441–1(e)(4) shall apply to withholding certificates described in this paragraph (e)(5)(iii). No withholding certificates or other appropriate documentation from persons who derive income through a foreign simple trust or a foreign grantor trust (whether or not U.S. exempt recipients) are required to be associated with the foreign simple trust or foreign grantor trust withholding certificate if the certificate is furnished solely for income that is treated as effectively connected with the conduct of a trade or business in the United States. Withholding certificates and other appropriate documentation (as determined under paragraph (e)(3)(i) of this section) that may be associated with a foreign simple trust or foreign grantor trust withholding certificate consist of beneficial owner withholding certificates under § 1.1441–1(e)(2)(i), intermediary withholding certificates under § 1.1441–1(e)(3)(i), withholding foreign partnership withholding certificates under paragraph (c)(2)(iv) of this section, nonwithholding foreign partnership withholding certificates under paragraph (c)(3)(iii) of this section, withholding certificates from foreign trusts or estates under paragraph (e)(4) or (5)(iii) of this section, documentary evidence described in §§ 1.1441–6(c)(3) or (4), or 1.6049–5(c)(1), and any other documentation or certificates applicable under other provisions of the Internal Revenue Code or regulations that certify or establish the status of the payee or beneficial owner as a U.S. or a foreign person. Nothing in this paragraph (e)(5)(iii) shall require a foreign simple trust or foreign grantor trust to provide original documentation. Copies of certificates or documentary evidence may be passed up to the U.S. withholding agent, in which case the foreign simple trust or foreign grantor trust must retain the original documentation for the same time period that the copy is required to be retained by the withholding agent under § 1.1441–1(e)(4)(iii) and must provide it to the withholding agent upon request. The information, statement, and certifications required on a foreign simple trust or foreign grantor trust withholding certificate are as follows—

(A) The name, permanent residence address (as described in § 1.1441–1(e)(2)(ii)), and the employer identification number, if required, of the trust and the country under the laws of which the trust is created;

(B) A certification that the person whose name is on the certificate is a foreign simple trust or a foreign grantor trust;

(C) A withholding statement associated with the foreign simple trust or foreign grantor trust withholding certificate that provides all of the information required by paragraph (e)(5)(iv) of this section. No withholding statement is required, however, for a foreign simple trust withholding certificate furnished for income that is treated as effectively connected with the conduct of a trade or business in the United States;

(D) A certification on a foreign simple trust withholding certificate that the income is treated as effectively connected with the conduct of a trade or business in the United States, if applicable; and

(E) Any other information, certifications, or statements required by the form or accompanying instructions in addition to, or in lieu of, the information, certifications, and statements described in this paragraph (e)(5)(iii);

(iv) *Withholding statement provided by a foreign simple trust or foreign grantor trust.* The provisions of §1.1441–1(e)(3)(iv) (regarding a withholding statement) shall apply to a foreign simple trust or foreign grantor trust by substituting the term foreign simple trust or foreign grantor trust for the term nonqualified intermediary.

(v) *Withholding foreign trusts.* The IRS may enter an agreement with a foreign trust to treat the trust or estate as a withholding foreign trust. Such an agreement shall generally follow the same principles as an agreement with a withholding foreign partnership under paragraph (c)(2)(ii) of this section. A withholding agent may treat a payment to a withholding foreign trust in the same manner the withholding agent would treat a payment to a withholding foreign partnership. The IRS may also enter an agreement to treat a trust as a qualified intermediary in appropriate circumstances. See §1.1441–1(e)(5)(ii)(D).

(6) *Presumption rules*—(i) *In general.* This paragraph (e)(6) contains the applicable presumptions for a withholding agent (including a trust or estate) to determine the classification and status of a trust or estate and its beneficiaries or owners in the absence of valid documentation. The provisions of §1.1441–1(b)(3)(iv) (regarding the 90-day grace period) and §1.1441–1(b)(3)(vii) through (ix) shall apply for purposes of this paragraph (e)(6).

(ii) *Determination of status as U.S. or foreign trust or estate in the absence of documentation.* In the absence of valid documentation that establishes the U.S. status of a trust or estate under paragraph (b)(1) of this section and of documentation that establishes the foreign status of a trust or estate under paragraph (e)(4) or (5)(iii) of this section, the withholding agent shall determine the classification of the payee based upon the presumptions set forth in §1.1441–1(b)(3)(ii). If, based upon those presumptions, the withholding agent classifies the payee as a trust or estate, the trust or estate shall be presumed to be a U.S. trust or U.S. estate unless there are indicia of foreign status, in which case the trust or estate shall be presumed to be foreign. Indicia of foreign status exists if the withholding agent has actual knowledge of the payee's employer identification number and that number begins with the two digits ''98,'' the withholding agent's communications with the payee are mailed to an address in a foreign country, or the payment is made outside the United States (as defined in §1.6049–5(e)). If an undocumented payee is presumed to be a foreign trust it shall be presumed to be a foreign complex trust. If a withholding agent has documentary evidence that establishes that an entity is a foreign trust, but the withholding agent cannot determine whether the foreign trust is a complex trust, a simple trust, or foreign grantor trust, the withholding agent may presume that the trust is a foreign complex trust.

(iii) *Determination of beneficiary or owner's status in the absence of certain documentation.* If a foreign simple trust or foreign grantor trust has provided a foreign simple trust or foreign grantor trust withholding certificate under paragraph (e)(5)(iii) of this section but the payment to such trust cannot be reliably associated with valid documentation from a specific beneficiary or owner of the trust, then any portion of a payment that a withholding agent cannot treat as reliably associated with valid documentation from a beneficiary or owner may be presumed made to a foreign payee. As a result, any payment of an amount subject to withholding is subject to withholding at a rate of 30 percent. Any such payment that is presumed to be made to an undocumented foreign person must be reported on Form 1042–S. See §1.1461–1(c).

(f) *Failure to receive withholding certificate timely or to act in accordance with applicable presumptions.* See applicable procedures described in §1.1441–

1(b)(7) in the event the withholding agent does not hold an appropriate withholding certificate or other appropriate documentation at the time of payment or fails to rely on the presumptions set forth in § 1.1441–1(b)(3) or in paragraph (d) or (e) of this section.

(g) *Effective date*—(1) *General rule.* This section applies to payments made after December 31, 2000.

(2) *Transition rules.* The validity of a withholding certificate that was valid on January 1, 1998, under the regulations in effect prior to January 1, 2001 (see 26 CFR parts 1 and 35a, revised April 1, 1999) and expired, or will expire, at any time during 1998, is extended until December 31, 1998. The validity of a withholding certificate that is valid on or after January 1, 1999, remains valid until its validity expires under the regulations in effect prior to January 1, 2001 (see 26 CFR parts 1 and 35a, revised April 1, 1999) but in no event will such a withholding certificate remain valid after December 31, 2000. The rule in this paragraph (g)(2), however, does not apply to extend the validity period of a withholding certificate that expires solely by reason of changes in the circumstances of the person whose name is on the certificate. Notwithstanding the first three sentences of this paragraph (g)(2), a withholding agent may choose to not take advantage of the transition rule in this paragraph (g)(2) with respect to one or more withholding certificates valid under the regulations in effect prior to January 1, 2001 (see 26 CFR parts 1 and 35a, revised April 1, 1999) and, therefore, to require withholding certificates conforming to the requirements described in this section (new withholding certificates). For purposes of this section, a new withholding certificate is deemed to satisfy the documentation requirement under the regulations in effect prior to January 1, 2001 (see 26 CFR parts 1 and 35a, revised April 1, 1999). Further, a new withholding certificate remains valid for the period specified in § 1.1441–1(e)(4)(ii), regardless of when the certificate is obtained.

[T.D. 8734, 62 FR 53452, Oct. 14, 1997, as amended by T.D. 8804, 63 FR 72185, 72188, Dec. 31, 1998; 64 FR 73410, Dec. 30, 1999; T.D. 8881, 65 FR 32188, May 22, 2000; 66 FR 18188, Apr. 6, 2001]

§ 1.1441–6 Claim of reduced withholding under an income tax treaty.

(a) *In general.* The rate of withholding on a payment of income subject to withholding may be reduced to the extent provided under an income tax treaty in effect between the United States and a foreign country. Most benefits under income tax treaties are to foreign persons who reside in the treaty country. In some cases, benefits are available under an income tax treaty to U.S. citizens or U.S. residents or to residents of a third country.

See paragraph (b)(5) of this section for claims of benefits by U.S. persons. If the requirements of this section are met, the amount withheld from the payment may be reduced at source to account for the treaty benefit. See also § 1.1441–4(b)(2) for rules regarding claims of reduced rate of withholding under an income tax treaty in the case of compensation from personal services.

(b) *Reliance on claim of reduced withholding under an income tax treaty*—(1) *In general.* The withholding imposed under section 1441, 1442, or 1443 on any payment to a foreign person is eligible for reduction under the terms of an income tax treaty only to the extent that such payment is treated as derived by a resident of an applicable treaty jurisdiction, such resident is a beneficial owner, and all other requirements for benefits under the treaty are satisfied. See section 894 and the regulations thereunder to determine whether a resident of a treaty country derives the income. Absent actual knowledge or reason to know otherwise, a withholding agent may rely on a claim that a beneficial owner is entitled to a reduced rate of withholding based upon an income tax treaty if, prior to the payment, the withholding agent can reliably associate the payment with a beneficial owner withholding certificate, as described in § 1.1441–1(e)(2),

that contains the information necessary to support the claim, or, in the case of a payment of income described in paragraph (c)(2) of this section made outside the United States with respect to an offshore account, documentary evidence described in paragraphs (c)(3), (4), and (5) of this section. See § 1.6049–5(e) for the definition of payments made outside the United States and § 1.6049–5(c)(1) for the definition of offshore account. For purposes of this paragraph (b)(1), a beneficial owner withholding certificate described in § 1.1441–1(e)(2)(i) contains information necessary to support the claim for a treaty benefit only if it includes the beneficial owner's taxpayer identifying number (except as otherwise provided in paragraph (c)(1) of this section and § 1.1441–6(g)) and the representations that the beneficial owner derives the income under section 894 and the regulations thereunder, if required, and meets the limitation on benefits provisions of the treaty, if any. The withholding certificate must also contain any other representations required by this section and any other information, certifications, or statements as may be required by the form or accompanying instructions in addition to, or in place of, the information and certifications described in this section. Absent actual knowledge or reason to know that the claims are incorrect (and subject to the standards of knowledge in § 1.1441–7(b)), a withholding agent may rely on the claims made on a withholding certificate or on documentary evidence. A withholding agent may also rely on the information contained in a withholding statement provided under § 1.1441–1(e)(3)(iv) and 1.1441–5(c)(3)(iv) and (e)(5)(iv) to determine whether the appropriate statements regarding section 894 and limitation on benefits have been provided in connection with documentary evidence. If the beneficial owner is related to the person obligated to pay the income, within the meaning of section 267(b) or 707(b), the withholding certificate must also contain a representation that the beneficial owner will file the statement required under § 301.6114–1(d) of this chapter (if applicable). The requirement to file an information statement under section 6114 for income subject to withholding applies only to amounts received during the taxpayer's taxable year that, in the aggregate, exceed $500,000. See § 301.6114–1(d) of this chapter. The Internal Revenue Service (IRS) may apply the provisions of § 1.1441–1(e)(1)(ii)(B) to notify the withholding agent that the certificate cannot be relied upon to grant benefits under an income tax treaty. See § 1.1441–1(e)(4)(viii) regarding reliance on a withholding certificate by a withholding agent. The provisions of § 1.1441–1(b)(3)(iv) dealing with a 90-day grace period shall apply for purposes of this section.

(2) *Payment to fiscally transparent entity*—(i) *In general.* If the person claiming a reduced rate of withholding under an income tax treaty is the interest holder of an entity that is considered to be fiscally transparent (as defined in the regulations under section 894) by the interest holder's jurisdiction with respect to an item of income, then, with respect to such income derived by that person through the entity, the entity shall be treated as a flow-through entity and may provide a flow-through withholding certificate with which the withholding certificate or other documentary evidence of the interest holder that supports the claim for treaty benefits is associated. For purposes of the preceding sentence, interest holders do not include any direct or indirect interest holders that are themselves treated as fiscally transparent entities with respect to that income by the interest holder's jurisdiction. See § 1.1441–1(c)(23) and (e)(3)(i) for the definition of flow-through entity and flow-through withholding certificate. The entity may provide a beneficial owner withholding certificate, or beneficial owner documentation, with respect to any remaining portion of the income to the extent the entity is receiving income and is not treated as fiscally transparent by its own jurisdiction. Further, the entity may claim a reduced rate of withholding with respect to the portion of a payment for which it is not treated as fiscally transparent if it meets all the requirements to make such a claim and, in the case of treaty benefits, it provides the documentation required by paragraph (b)(1) of this section. If dual claims, as described in paragraph

(b)(2)(iii) of this section, are made, multiple withholding certificates may have to be furnished. Multiple withholding certificates may also have to be furnished if the entity receives income for which a reduction of withholding is claimed under a provision of the Internal Revenue Code (*e.g.,* portfolio interest) and income for which a reduction of withholding is claimed under an income tax treaty.

(ii) *Certification by qualified intermediary.* Notwithstanding paragraph (b)(2)(i) of this section, a foreign entity that is fiscally transparent, as defined in the regulations under section 894, that is also a qualified intermediary for purposes of claiming a reduced rate of withholding under an income tax treaty for its interest holders (who are deriving the income paid to the entity as residents of an applicable treaty jurisdiction) may furnish a single qualified intermediary withholding certificate, as described in §1.1441–1(e)(3)(ii), for amounts for which it claims a reduced rate of withholding under an income tax treaty on behalf of its interest holders.

(iii) *Dual treatment.* Under paragraph (b)(2)(i) of this section, a withholding agent may make a payment to a foreign entity that is simultaneously claiming to be the beneficial owner of a portion of the income (whether or not it is also claiming a reduced rate of tax on its own behalf) and a reduced rate on behalf of persons in their capacity as interest holders in the entity with respect to the same, or a different, portion of the income. If the same portion of a payment may be reliably associated with both the entity's claim and an interest holder's claim, the withholding agent may choose to reject both claims and request new documentation and information allocating the payment among the beneficial owners of the payment or the withholding agent may choose which claim to apply. If the entity and the interest holder's claims are reliably associated with separate portions of the payment, the withholding agent may, at its option, accept such dual claims based on withholding certificates or other appropriate documentation furnished by the entity and its interest holders with respect to their respective shares of the payment even though this will result in the withholding agent treating the entity differently with respect to different portions of the same payment. Alternatively, the withholding agent may choose to apply only the claim made by the entity, provided the entity may be treated as a beneficial owner of the income. If the withholding agent does not accept claims for a reduced rate of withholding presented by any one or more of the interest holders, or by the entity, any interest holder or the entity may subsequently claim a refund or credit of any amount so withheld to the extent the interest holder's or entity's share of such withholding exceeds the amount of tax due.

(iv) *Examples.* The following examples illustrate the rules of this paragraph (b)(2):

Example 1. (i) *Facts.* Entity E is a business organization formed under the laws of country Y. Country Y has an income tax treaty with the United States. The treaty contains a limitation on benefits provision. E receives U.S. source royalties from withholding agent W and claims a reduced rate of withholding under the U.S.-Y tax treaty on its own behalf (rather than on behalf of its interest holders). E furnishes a beneficial owner withholding certificate described in paragraph (b)(1) of this section that represents that E is a resident of country Y (within the meaning of the U.S.-Y tax treaty), is the beneficial owner of the income, derives the income under section 894 and the regulations thereunder, and is not precluded from claiming benefits by the treaty's limitation on benefits provision.

(ii) *Analysis.* Absent actual knowledge or reason to know otherwise, W may rely on the representations made by E to apply a reduced rate of withholding.

Example 2. (i) *Facts.* The facts are the same as under *Example 1,* except that one of E's interest holders, H, is an entity organized in country Z. The U.S.-Z tax treaty reduces the rate on royalties to zero whereas the rate on royalties under the U.S.-Y tax treaty applicable to E is 5 percent. H is not fiscally transparent under country Z's tax law with respect to such income. H furnishes a beneficial owner withholding certificate to E that represents that H derives, within the meaning of section 894 and the regulations thereunder, its share of the royalty income paid to E as a resident of country Z, is the beneficial owner of the royalty income, and is not precluded from claiming treaty benefits by virtue of the limitation on benefits provision in the U.S.-Z treaty. E furnishes to

W a flow-through withholding certificate described in §1.1441–1(e)(3)(i) to which it attaches H's beneficial owner withholding certificate and a withholding statement for the portion of the payment that H claims as its distributive share of the royalty income. E also furnishes to W a beneficial owner withholding certificate for itself for the portion of the payment that H does not claim as its distributive share.

(ii) *Analysis.* Absent actual knowledge or reason to know otherwise, W may rely on the documentation furnished by E to treat the royalty payment to a single foreign entity (E) as derived by different residents of tax treaty countries as a result of the claims presented under different treaties. W may, at its option, grant dual treatment, that is, a reduced rate of zero percent under the U.S.-Z treaty on the portion of the royalty payment that H claims to derive as a resident of country Z and a reduced rate of 5 percent under the U.S.-Y treaty for the balance. However, under paragraph (b)(2)(iii) of this section, W may, at its option, treat E as the only relevant person deriving the royalty and grant benefits under the U.S.-Y treaty only.

Example 3. (i) *Facts.* E is a business organization formed under the laws of country X. Country X has an income tax treaty with the United States. E has two interest holders, H1, organized in country Y, and H2, organized in country Z. E receives from W, a U.S. withholding agent, U.S. source royalties and interest that is eligible for the portfolio interest exception under sections 871(h) and 881(c), provided W receives the appropriate beneficial owner statement required under section 871(h)(5). E is classified as a corporation under U.S. tax law principles. Country X, E's country of organization, treats E as an entity that is not fiscally transparent with respect to items of income under the regulations under section 894. Under the U.S.-X income tax treaty, royalties are subject to 5 percent rate of withholding. Country Y, H1's country of organization, treats E as fiscally transparent with respect to items of income under section 894 and H1 as not fiscally transparent with respect to items of income. Under the country Y-U.S. income tax treaty, royalties are exempt from U.S. tax. Country Z, H2's country of organization, treats E as not fiscally transparent under section 894 with respect to items of income. E provides W with a flow-through beneficial owner withholding certificate with which it associates a beneficial owner withholding certificate from H1. H1's withholding certificate states that H1 is a resident of country Y, derives the royalty income under section 894, meets the applicable limitations on benefits provisions of the U.S.-Y treaty, and is the beneficial owner of the income. The withholding statement attached to E's flow-through withholding certificate allocates one-half of the royalty payment to H1. E also provides W with a beneficial owner withholding certificate for the interest income and the remaining one-half of the royalty income. The withholding certificate states that E is a resident of country X, derives the royalty income under section 894, meets the limitation on benefits provisions of the U.S.-X treaty, and is the beneficial owner of the income.

(ii) *Analysis.* Absent actual knowledge or reason to know that the claims are incorrect, W may treat one-half of the royalty derived by E as subject to a 5 percent withholding rate and one-half of the royalty as derived by H1 and subject to no withholding. Further, it may treat all of the interest as being paid to E and as qualifying for the portfolio interest exception. W can, at its option, treat the entire royalty as paid to E and subject it to withholding at a 5 percent rate of withholding. In that case, H1 would be entitled to claim a refund with respect to its one-half of the royalty.

(3) *Certified TIN.* The IRS may issue guidance requiring a foreign person claiming treaty benefits and for whom a TIN is required to establish with the IRS, at the time the TIN is requested or after the TIN is issued, that the person is a resident in a treaty country and meets other conditions (such as limitation on benefits provisions) of the treaty. See §601.601(d)(2) of this chapter.

(4) *Claim of benefits under an income tax treaty by a U.S. person.* In certain cases, a U.S. person may claim the benefit of an income tax treaty. For example, under certain treaties, a U.S. citizen residing in the treaty country may claim a reduced rate of U.S. tax on certain amounts representing a pension or an annuity from U.S. sources. Claims of treaty benefits by a U.S. person may be made by furnishing a Form W–9 to the withholding agent or such other form as the IRS may prescribe in published guidance (see §601.601(d)(2) of this chapter).

(c) *Exemption from requirement to furnish a taxpayer identifying number and special documentary evidence rules for certain income*—(1) *General rule.* In the case of income described in paragraph (c)(2) of this section, a withholding agent may rely on a beneficial owner withholding certificate described in paragraph (b)(1) of this section without regard to the requirement that the withholding certificate include the beneficial owner's taxpayer identifying

number. In the case of payments of income described in paragraph (c)(2) of this section made outside the United States (as defined in § 1.6049–5(e)) with respect to an offshore account (as defined in § 1.6049–5(c)(1)), a withholding agent may, as an alternative to a withholding certificate described in paragraph (b)(1) of this section, rely on a certificate of residence described in paragraph (c)(3) of this section or documentary evidence described in paragraph (c)(4) of this section, relating to the beneficial owner, that the withholding agent has reviewed and maintains in its records in accordance with § 1.1441-1(e)(4)(iii). In the case of a payment to a person other than an individual, the certificate of residence or documentary evidence must be accompanied by the statements described in paragraphs (c)(5)(i) and (ii) of this section regarding limitation on benefits and whether the amount paid is derived by such person or by one of its interest holders. The withholding agent maintains the reviewed documents by retaining either the documents viewed or a photocopy thereof and noting in its records the date on which, and by whom, the documents were received and reviewed. This paragraph (c)(1) shall not apply to amounts that are exempt from withholding based on a claim that the income is effectively connected with the conduct of a trade or business in the United States.

(2) *Income to which special rules apply.* The income to which paragraph (c)(1) of this section applies is dividends and interest from stocks and debt obligations that are actively traded, dividends from any redeemable security issued by an investment company registered under the Investment Company Act of 1940 (15 U.S.C. 80a–1), dividends, interest, or royalties from units of beneficial interest in a unit investment trust that are (or were upon issuance) publicly offered and are registered with the Securities and Exchange Commission under the Securities Act of 1933 (15 U.S.C. 77a) and amounts paid with respect to loans of securities described in this paragraph (c)(2). For purposes of this paragraph (c)(2), a stock or debt obligation is actively traded if it is actively traded within the meaning of section 1092(d) and § 1.1092(d)–1 when documentation is provided.

(3) *Certificate of residence.* A certificate of residence referred to in paragraph (c)(1) of this section is a certification issued by an appropriate tax official of the treaty country of which the taxpayer claims to be a resident that the taxpayer has filed its most recent income tax return as a resident of that country (within the meaning of the applicable tax treaty). The certificate of residence must have been issued by such official within three years prior to its being presented to the withholding agent, or such other period as the IRS may prescribe in published guidance (see § 601.601(d)(2) of this chapter). See § 1.1441–1(e)(4)(ii)(A) for the period during which a withholding agent may rely on a certificate of residence. The competent authorities may agree to a different procedure for certifying residence, in which case such procedure shall govern for payments made to a person claiming to be a resident of the country with which such an agreement is in effect.

(4) *Documentary evidence establishing residence in the treaty country*—(i) *Individuals.* For an individual, the documentary evidence referred to in paragraph (c)(1) of this section is any documentation that includes the individuals name, address, and photograph, is an official document issued by an authorized governmental body (*i.e.*, a government or agency thereof, or a municipality), and has been issued no more than three years prior to presentation to the withholding agent. A document older than three years may be relied upon as proof of residence only if it is accompanied by additional evidence of the person's residence in the treaty country (e.g., a bank statement, utility bills, or medical bills). Documentary evidence must be in the form of original documents or certified copies thereof.

(ii) *Persons other than individuals.* For a person other than an individual, the documentary evidence referred to in paragraph (c)(1) of this section is any documentation that includes the name of the entity and the address of its principal office in the treaty country, and is an official document issued by an authorized governmental body (e.g.,

a government or agency thereof, or a municipality).

(5) *Statements regarding entitlement to treaty benefits*—(i) *Statement regarding conditions under a limitation on benefits provision.* In addition to the documentary evidence described in (c)(4)(ii) of this section, a taxpayer that is not an individual must provide a statement that it meets one or more of the conditions set forth in the limitation on benefits article (if any, or in a similar provision) contained in the applicable tax treaty.

(ii) *Statement regarding whether the taxpayer derives the income.* A taxpayer that is not an individual must also provide, in addition to the documentary evidence and the statement described in paragraph (c)(5)(i) of this section, a statement that any income for which it intends to claim benefits under an applicable income tax treaty is income that will properly be treated as derived by itself as a resident of the applicable treaty jurisdiction within the meaning of section 894 and the regulations thereunder. This requirement does not apply if the taxpayer furnishes a certificate of residence that certifies that fact.

(d) *Joint owners.* In the case of a payment to joint owners, each owner must furnish a withholding certificate or, if applicable, documentary evidence or a certificate of residence. The applicable rate of withholding on a payment of income to joint owners shall be the highest applicable rate.

(e) *Competent authority.* The procedures described in this section may be modified to the extent the U.S. competent authority may agree with the competent authority of a country with which the United States has an income tax treaty in effect.

(f) *Failure to receive withholding certificate timely.* See applicable procedures described in § 1.1441–1(b)(7) in the event the withholding agent does not hold an appropriate withholding certificate or other appropriate documentation at the time of payment.

(g) *Special taxpayer identifying number rule for certain foreign individuals claiming treaty benefits*—(1) *General rule.* Except as provided in paragraph (c) or (g)(2) of this section, for purposes of paragraph (b)(1) of this section, a withholding agent may not rely on a beneficial owner withholding certificate, described in paragraph (b)(1) of this section, that does not include the beneficial owner's taxpayer identifying number (TIN).

(2) *Special rule.* For purposes of satisfying the TIN requirement of paragraph (b)(1) of this section, a withholding agent may rely on a beneficial owner withholding certificate, described in such paragraph, without regard to the requirement that the withholding certificate include the beneficial owner's TIN, if—

(i) A withholding agent, who is also an acceptance agent, as defined in § 301.6109–1(d)(3)(iv) of this chapter (the payor), has entered into an acceptance agreement that permits the acceptance agent to request an individual taxpayer identification number (ITIN) on an expedited basis because of the circumstances of payment or unexpected nature of payments required to be made by the payor;

(ii) The payor was required to make an unexpected payment to the beneficial owner who is a foreign individual;

(iii) An ITIN for the beneficial owner cannot be received by the payor from the Internal Revenue Service (IRS) because the IRS is not issuing ITINs at the time of payment or any time prior to the time of payment when the payor has knowledge of the unexpected payment;

(iv) The unexpected payment to the beneficial owner could not be reasonably delayed to permit the payor to obtain an ITIN for the beneficial owner on an expedited basis; and

(v) The payor satisfies the provisions of paragraph (g)(3) of this section.

(3) *Requirement that an ITIN be requested during the first business day following payment.* The payor must submit a beneficial owner payee application for an ITIN (Form W–7 ''Application for IRS Individual Taxpayer Identification Number'') that complies with the requirements of § 301.6109–1(d)(3)(ii) of this chapter, and also the certification described in § 301.6109–1(d)(3)(iv)(A)(*4*) of this chapter, to the IRS during the first business day after payment is made.

(4) *Definition of unexpected payment.* For purposes of this section, an *unexpected payment* is a payment that, because of the nature of the payment or the circumstances in which it is made, could not reasonably have been anticipated by the payor or beneficial owner during a time when the payor or beneficial owner could obtain an ITIN from the IRS. For purposes of this paragraph (g)(4), a payor or beneficial owner will not lack the requisite knowledge of the forthcoming payment solely because the amount of the payment is not fixed.

(5) *Examples.* The rules of this paragraph (g) are illustrated by the following examples:

Example 1. G, a citizen and resident of Country Y, a country with which the United States has an income tax treaty that exempts U.S. source gambling winnings from U.S. tax, is visiting the United States for the first time. During his visit, G visits Casino B, a casino that has entered into a special acceptance agent agreement with the IRS that permits Casino B to request an ITIN on an expedited basis. During that visit, on a Sunday, G wins $5000 in slot machine play at Casino B and requests immediate payment from Casino B. ITINs are not available from the IRS on Sunday and would not again be available until Monday. G, who does not have an individual taxpayer identification number, furnishes a beneficial owner withholding certificate, described in §1.1441–1(e)(2), to the Casino upon winning at the slot machine. The beneficial owner withholding certificate represents that G is a resident of Country Y (within the meaning of the U.S.-Y tax treaty) and meets all applicable requirements for claiming benefits under the U.S.-Y tax treaty. The beneficial owner withholding certificate does not, however, contain an ITIN for G. On the following Monday, Casino B faxes a completed Form W–7, including the required certification, for G, to the IRS for an expedited ITIN. Pursuant to paragraph (b) and (g)(2) of this section, absent actual knowledge or reason to know otherwise, Casino B, may rely on the documentation furnished by G at the time of payment and pay the $5000 to G without withholding U.S. tax based on the treaty exemption.

Example 2. The facts are the same as *Example 1,* except G visits Casino B on Monday. G requests payment Monday afternoon. In order to pay the winnings to G without withholding the 30 percent tax, Casino B must apply for and obtain an ITIN for G because an expedited ITIN is available from the IRS at the time of the $5000 payment to G.

Example 3. The facts are the same as *Example 1,* except G requests payment fifteen minutes before the time when the IRS begins issuing ITINs. Under these facts, it would be reasonable for Casino B to delay payment to G. Therefore, Casino B must apply for and obtain an ITIN for G if G wishes to claim an exemption from U.S. withholding tax under the U.S.-Y tax treaty at the time of payment.

Example 4. P, a citizen and resident of Country Z, is a lawyer and a well-known expert on real estate transactions. P is scheduled to attend a three-day seminar on complex real estate transactions, as a participant, at University U, a U.S. university, beginning on a Saturday and ending on the following Monday, which is a holiday. University U has entered into a special acceptance agent agreement with the IRS that permits University U to request an ITIN on an expedited basis. Country Z is a country with which the United States has an income tax treaty that exempts certain income earned from the performance of independent personal services from U.S. tax. It is P's first visit to the United States. On Saturday, prior to the start of the seminar, Professor Q, one of the lecturers at the seminar, cancels his lecture. That same day the Dean of University U offers P $5000, to replace Professor Q at the seminar, payable at the conclusion of the seminar on Monday. P agrees. P gives her lecture Sunday afternoon. ITINs are not available from the IRS on that Saturday, Sunday, or Monday. After the seminar ends on Monday, P, who does not have an ITIN, requests payment for her teaching. P furnishes a beneficial owner withholding certificate, described in §1.1441–1(e)(2), to University U that represents that P is a resident of Country Z (within the meaning of the U.S.-Z tax treaty) and meets all applicable requirements for claiming benefits under the U.S.-Z tax treaty. The beneficial owner withholding certificate does not, however, contain an ITIN for P. On Tuesday, University U faxes a completed Form W–7, including the required certification, for P, to the IRS for an expedited ITIN. Pursuant to paragraph (b) and (g)(2) of this section, absent actual knowledge or reason to know otherwise, University U may rely on the documentation furnished by P and pay $5000 to P without withholding U.S. tax based on the treaty exemption.

(h) *Effective dates*—(1) *General rule.* This section applies to payments made after December 31, 2000, except for paragraph (g) of this section which applies to payments made after December 31, 2001.

(2) *Transition rules.* For purposes of this section, the validity of a Form 1001 or 8233 that was valid on January 1,

1998, under the regulations in effect prior to January 1, 2001 (see 26 CFR parts 1 and 35a, revised April 1, 1999) and expired, or will expire, at any time during 1998, is extended until December 31, 1998. The validity of a Form 1001 or 8233 that is valid on or after January 1, 1999, remains valid until its validity expires under the regulations in effect prior to January 1, 2001 (see 26 CFR parts 1 and 35a, revised April 1, 1999) but in no event will such a form remain valid after December 31, 2000. The rule in this paragraph (h)(2), however, does not apply to extend the validity period of a Form 1001 or 8233 that expires solely by reason of changes in the circumstances of the person whose name is on the certificate or in interpretation of the law under the regulations under §1.894–1T(d). Notwithstanding the first three sentences of this paragraph (h)(2), a withholding agent may choose to not take advantage of the transition rule in this paragraph (h)(2) with respect to one or more withholding certificates valid under the regulations in effect prior to January 1, 2001 (see 26 CFR parts 1 and 35a, revised April 1, 1999) and, therefore, to require withholding certificates conforming to the requirements described in this section (new withholding certificates). For purposes of this section, a new withholding certificate is deemed to satisfy the documentation requirement under the regulations in effect prior to January 1, 2001 (see 26 CFR parts 1 and 35a, revised April 1, 1999). Further, a new withholding certificate remains valid for the period specified in §1.1441–1(e)(4)(ii), regardless of when the certificate is obtained.

[T.D. 8734, 62 FR 53458, Oct. 14, 1997, as amended by T.D. 8804, 63 FR 72185, 72188, Dec. 31, 1998; T.D. 8856, 64 FR 73410, Dec. 30, 1999; 65 FR 16320, Mar. 28, 2000; T.D. 8881, 65 FR 32194, May 22, 2000; T.D. 8977, 67 FR 2328, Jan. 17, 2002; T.D. 9023, 67 FR 70312, Nov. 22, 2002; T.D. 9253, 71 FR 13006, Mar. 14, 2006]

§1.1441–7 General provisions relating to withholding agents.

(a) *Withholding agent defined*—(1) *In general.* For purposes of chapter 3 of the Internal Revenue Code and the regulations under such chapter, the term *withholding agent* means any person, U.S. or foreign, that has the control, receipt, custody, disposal, or payment of an item of income of a foreign person subject to withholding, including (but not limited to) a foreign intermediary described in §1.1441–1(e)(3)(i), a foreign partnership, or a U.S. branch described in §1.1441–1(b)(2)(iv)(A) or (E). See §§1.1441–1(b)(2) and (3) and 1.1441–5(c), (d), and (e), for rules to determine whether a payment is considered made to a foreign person. Any person who meets the definition of a withholding agent is required to deposit any tax withheld under §1.1461–1(a) and to make the returns prescribed by §1.1461–1(b) and (c), except as otherwise may be required by a qualified intermediary withholding agreement, a withholding foreign partnership agreement, or a withholding foreign trust agreement. When several persons qualify as withholding agents with respect to a single payment, only one tax is required to be withheld and deposited. See §1.1461–1. A person who, as a nominee described in §1.6031(c)–1T, has furnished to a partnership all of the information required to be furnished under §1.6031(c)–1T(a) shall not be treated as a withholding agent if it has notified the partnership that it is treating the provision of information to the partnership as a discharge of its obligations as a withholding agent.

(2) *Examples.* The following examples illustrate the rules of paragraph (a)(1) of this section:

Example 1. USB is a broker organized in the United States. USB pays U.S. source dividends and interest, which are amounts subject to withholding under §1.1441–2(a), to FC, a foreign corporation that has an investment account with USB. USB is a withholding agent as defined in paragraph (a)(1) of this section.

Example 2. USB is a bank organized in the United States. FB is a bank organized in country X. X has an omnibus account with USB through which FB invests in debt and equity instruments that pay amounts subject to withholding as defined in §1.1441–2(a). FB is a nonqualified intermediary, as defined in §1.1441–1(c)(14). Both USB and FB are withholding agents as defined in paragraph (a)(1) of this section.

Example 3. The facts are the same as in Example 2, except that FB is a qualified intermediary. Both USB and FB are withholding agents as defined in paragraph (a)(1) of this section.

Example 4. FB is a bank organized in country X. FB has a branch in the United States. FB's branch has customers that are foreign persons who receive amounts subject to withholding, as defined in §1.1441–2(a). FB is a withholding agent under paragraph (a)(1) of this section and is required to withhold and report payments of amounts subject to withholding in accordance with chapter 3 of the Internal Revenue Code.

Example 5. X is a foreign corporation. X pays dividends to shareholders who are foreign persons. Under section 861(a)(2)(B), a portion of the dividends are from sources within the United States and constitute amounts subject to withholding within the meaning of §1.1441–2(a). The dividends are not subject to tax under section 884(a). See 884(e)(3). X is a withholding agent under paragraph (a)(1) of this section.

(b) *Standards of knowledge*—(1) *In general.* A withholding agent must withhold at the full 30-percent rate under section 1441, 1442, or 1443(a) or at the full 4-percent rate under section 1443(b) if it has actual knowledge or reason to know that a claim of U.S. status or of a reduced rate of withholding under section 1441, 1442, or 1443 is unreliable or incorrect. A withholding agent shall be liable for tax, interest, and penalties to the extent provided under sections 1461 and 1463 and the regulations under those sections if it fails to withhold the correct amount despite its actual knowledge or reason to know the amount required to be withheld. For purposes of the regulations under sections 1441, 1442, and 1443, a withholding agent may rely on information or certifications contained in, or associated with, a withholding certificate or other documentation furnished by or for a beneficial owner or payee unless the withholding agent has actual knowledge or reason to know that the information or certifications are incorrect or unreliable and, if based on such knowledge or reason to know, it should withhold (under chapter 3 of the Code or another withholding provision of the Code) an amount greater than would be the case if it relied on the information or certifications, or it should report (under chapter 3 of the Code or under another provision of the Code) an amount that would not otherwise be reportable if it relied on the information or certifications. See §1.1441–1(e)(4)(viii) for applicable reliance rules. A withholding agent that has received notification by the Internal Revenue Service (IRS) that a claim of U.S. status or of a reduced rate is incorrect has actual knowledge beginning on the date that is 30 calendar days after the date the notice is received. A withholding agent that fails to act in accordance with the presumptions set forth in §§1.1441–1(b)(3), 1.1441–4(a), 1.1441–5 (d) and (e), or 1.1441–9(b)(3) may also be liable for tax, interest, and penalties. See §1.1441–1(b)(3)(ix) and (7).

(2) *Reason to know.* A withholding agent shall be considered to have reason to know if its knowledge of relevant facts or of statements contained in the withholding certificates or other documentation is such that a reasonably prudent person in the position of the withholding agent would question the claims made.

(3) *Financial institutions—limits on reason to know.* For purposes of this paragraph (b)(3) and paragraphs (b)(4) through (b)(10) of this section, the terms *withholding certificate, documentary evidence,* and *documentation* are defined in §1.1441–1(c)(16), (17) and (18). Except as otherwise provided in paragraphs (b)(4) through (b)(9) of this section, a withholding agent that is a financial institution (including a regulated investment company) that has a direct account relationship with a beneficial owner (a direct account holder) has a reason to know, with respect to amounts described in §1.1441–6(c)(2), that documentation provided by the direct account holder is unreliable or incorrect only if one or more of the circumstances described in paragraphs (b)(4) through (b)(9) of this section exist. If a direct account holder has provided documentation that is unreliable or incorrect under the rules of paragraph (b)(4) through (b)(9) of this section, the withholding agent may require new documentation. Alternatively, the withholding agent may rely on the documentation originally provided if the rules of paragraphs (b)(4) through (b)(9) of this section permit such reliance based on additional statements and documentation. Paragraph (b)(10) of this section provides limits on reason to know for financial institutions that receive beneficial owner documentation from persons (indirect account holders) that have an

account relationship with, or an ownership interest in, a direct account holder. For rules regarding reliance on Form W–9, see §31.3406(g)-3(e)(2) of this chapter.

(4) *Rules applicable to withholding certificates*—(i) *In general.* A withholding agent has reason to know that a beneficial owner withholding certificate provided by a direct account holder in connection with a payment of an amount described in §1.1441–6(c)(2) is unreliable or incorrect if the withholding certificate is incomplete with respect to any item on the certificate that is relevant to the claims made by the direct account holder, the withholding certificate contains any information that is inconsistent with the direct account holder's claim, the withholding agent has other account information that is inconsistent with the direct account holder's claim, or the withholding certificate lacks information necessary to establish entitlement to a reduced rate of withholding. For purposes of establishing a direct account holder's status as a foreign person or resident of a treaty country a withholding certificate shall be considered unreliable or inconsistent with an account holder's claims only if it is not reliable under the rules of paragraphs (b)(5) and (6) of this section. A withholding agent that relies on an agent to review and maintain a withholding certificate is considered to know or have reason to know the facts within the knowledge of the agent.

(ii) *Examples.* The rules of paragraph (b)(4) of this section are illustrated by the following examples:

Example 1. F, a foreign person that has a direct account relationship with USB, a bank that is a U.S. person, provides USB with a beneficial owner withholding certificate for the purpose of claiming a reduced rate of withholding on U.S. source dividends. F resides in a treaty country that has a limitation on benefits provision in its income tax treaty with the United States. The withholding certificate, however, does not contain a statement regarding limitations on benefits or deriving the income under section 894 as required by §1.1441–6(b)(1). USB cannot rely on the withholding certificate to grant a reduced rate of withholding because it is incomplete with respect to the claim made by F.

Example 2. F, a foreign person that has a direct account relationship with USB, a broker that is a U.S. person, provides USB with a withholding certificate for the purpose of claiming the portfolio interest exception under section 881(c), which applies to foreign corporations. F indicates on its withholding certificate, however, that it is a partnership. USB may not treat F as a beneficial owner of the interest for purposes of the portfolio interest exception because F has indicated on its withholding certificate that it is a foreign partnership, and therefore under §1.1441–1(c)(6)(ii) it is not the beneficial owner of the interest payment.

(5) *Withholding certificate—establishment of foreign status.* A withholding agent has reason to know that a beneficial owner withholding certificate (as defined in §1.1441–1(e)(2)) provided by a direct account holder in connection with a payment of an amount described in §1.1441–6(c)(2) is unreliable or incorrect for purposes of establishing the account holder's status as a foreign person if the certificate is described in paragraph (b)(5)(i) or (ii) of this section.

(i) A withholding certificate is unreliable or incorrect if the withholding certificate has a permanent residence address (as defined in §1.1441–1(e)(2)(ii)) in the United States, the withholding certificate has a mailing address in the United States, the withholding agent has a residence or mailing address as part of its account information that is an address in the United States, or the direct account holder notifies the withholding agent of a new residence or mailing address in the United States (whether or not provided on a withholding certificate). A withholding agent may, however, rely on the beneficial owner withholding certificate as establishing the account holder's foreign status if it may do so under the provisions of paragraph (b)(5)(i)(A) or (B) of this section.

(A) A withholding agent may treat a direct account holder as a foreign person if the beneficial owner withholding certificate has been provided by an individual and—

(*1*) The withholding agent has in its possession or obtains documentary evidence (which does not contain a U.S. address) that has been provided within the past three years, was valid at the time it was provided, the documentary evidence supports the claim of foreign status, and the direct account holder

provides the withholding agent with a reasonable explanation, in writing, supporting the account holder's foreign status; or

(*2*) The account is maintained at an office of the withholding agent outside the United States and the withholding agent is required to report annually a payment to the direct account holder on a tax information statement that is filed with the tax authority of the country in which the office is located and that country has an income tax treaty in effect with the United States.

(B) A withholding agent may treat an account holder as a foreign person if the beneficial owner withholding certificate has been provided by an entity that the withholding agent does not know, or does not have reason to know, is a flow-through entity and—

(*1*) The withholding agent has in its possession, or obtains, documentation that substantiates that the entity is actually organized or created under the laws of a foreign country; or

(*2*) The account is maintained at an office of the withholding agent outside the United States and the withholding agent is required to report annually a payment to the direct account holder on a tax information statement that is filed with the tax authority of the country in which the office is located and that country has an income tax treaty in effect with the United States.

(ii) A beneficial owner withholding certificate is unreliable or incorrect if it is provided with respect to an offshore account (as defined in § 1.6049–5(c)(1)) and the direct account holder has standing instructions directing the withholding agent to pay amounts from its account to an address or an account maintained in the United States. The withholding agent may treat the direct account holder as a foreign person, however, if the direct account holder provides a reasonable explanation in writing that supports its foreign status.

(6) *Withholding certificate—claim of reduced rate of withholding under treaty*. A withholding agent has reason to know that a withholding certificate (other than Form W–9) provided by a direct account holder in connection with a payment of an amount described in § 1.1441–6(c)(2) is unreliable or incorrect for purposes of establishing that the direct account holder is a resident of a country with which the United States has an income tax treaty if it is described in paragraphs (b)(6)(i) through (iii) of this section.

(i) A beneficial owner withholding certificate is unreliable or incorrect if the permanent residence address on the beneficial owner withholding certificate is not in the country whose treaty is invoked, or the direct account holder notifies the withholding agent of a new permanent residence address that is not in the treaty country. A withholding agent may, however, treat a direct account holder as entitled to a reduced rate of withholding under an income tax treaty if the direct account holder provides a reasonable explanation for the permanent residence address outside the treaty country (e.g., the address is the address of a branch of the beneficial owner located outside the treaty country in which the entity is a resident) or the withholding agent has in its possession, or obtains, documentary evidence that establishes residency in a treaty country.

(ii) A beneficial owner withholding certificate is unreliable or incorrect if the permanent residence address on the withholding certificate is in the applicable treaty country but the withholding certificate contains a mailing address outside the treaty country or the withholding agent has a mailing address as part of its account information that is outside the treaty country. A mailing address that is a P.O. Box, in-care-of address, or address at a financial institution (if the financial institution is not a beneficial owner) shall not preclude a withholding agent from treating the direct account holder as a resident of a treaty country if such address is in the treaty country. If a withholding agent has a mailing address (whether or not contained on the withholding certificate) outside the applicable treaty country, the withholding agent may nevertheless treat a direct account holder as a resident of an applicable treaty country if—

(A) The withholding agent has in its possession, or obtains, additional documentation supporting the direct account holder's claim of residence in the

applicable treaty country (and the additional documentation does not contain an address outside the treaty country);

(B) The withholding agent has in its possession, or obtains, documentation that establishes that the direct account holder is an entity organized in a treaty country (or an entity managed and controlled in a treaty country, if the applicable treaty so requires);

(C) The withholding agent knows that the address outside the applicable treaty country (other than a P.O. box, or in-care-of address) is a branch of a bank or insurance company that is a resident of the applicable treaty country; or

(D) The withholding agent obtains a written statement from the direct account holder that reasonably establishes entitlement to treaty benefits.

(iii) A beneficial owner withholding certificate is unreliable or incorrect to establish entitlement to a reduced rate of withholding under an income tax treaty if the direct account holder has standing instructions for the withholding agent to pay amounts from its account to an address or an account outside the treaty country unless the direct account holder provides a reasonable explanation, in writing, establishing the direct account holder's residence in the applicable treaty country.

(7) *Documentary evidence.* A withholding agent shall not treat documentary evidence provided by a direct account holder as valid if the documentary evidence does not reasonably establish the identity of the person presenting the documentary evidence. For example, documentary evidence is not valid if it is provided in person by a direct account holder that is a natural person and the photograph or signature on the documentary evidence, if any, does not match the appearance or signature of the person presenting the document. A withholding agent shall not rely on documentary evidence to reduce the rate of withholding that would otherwise apply under the presumption rules of §§ 1.1441–1(b)(3), 1.1441–5(d) and (e)(6), and 1.6049–5(d) if the documentary evidence contains information that is inconsistent with the direct account holder's claim of a reduced rate of withholding, the withholding agent has other account information that is inconsistent with the direct account holder's claim, or the documentary evidence lacks information necessary to establish entitlement to a reduced rate of withholding. For example, if a direct account holder provides documentary evidence to claim treaty benefits and the documentary evidence establishes the direct account holder's status as a foreign person and a resident of a treaty country, but the account holder fails to provide the treaty statements required by § 1.1441–6(c)(5), the documentary evidence does not establish the direct account holder's entitlement to a reduced rate of withholding. For purposes of establishing a direct account holder's status as a foreign person or resident of a country with which the United States has an income tax treaty with respect to income described in § 1.1441–6(c)(2), documentary evidence shall be considered unreliable or incorrect only if it is not reliable under the rules of paragraph (b)(8) and (9) of this section.

(8) *Documentary evidence—establishment of foreign status.* A withholding agent has reason to know that documentary evidence provided in connection with a payment of an amount described in § 1.1441–6(c)(2) is unreliable or incorrect for purposes of establishing the direct account holder's status as a foreign person if the documentary evidence is described in paragraphs (b)(8)(i), (ii), (iii) or (iv) of this section.

(i) A withholding agent shall not treat documentary evidence provided by an account holder after December 31, 2000, as valid for purposes of establishing the direct account holder's foreign status if the only mailing or residence address that is available to the withholding agent is an address at a financial institution (unless the financial institution is a beneficial owner of the income), an in-care-of address, or a P.O. box. In this case, the withholding agent must obtain additional documentation that is sufficient to establish the direct account holder's status as a foreign person. A withholding agent shall not treat documentary evidence provided by an account holder before January 1, 2001, as valid for purposes of establishing a direct account holder's status as a foreign person if it

has actual knowledge that the direct account holder is a U.S. person or if it has a mailing or residence address for the direct account holder in the United States. If a withholding agent has an address for the direct account holder in the United States, the withholding agent may nevertheless treat the direct account holder as a foreign person if it can so treat the direct account holder under the rules of paragraph (b)(8)(ii) of this section.

(ii) Documentary evidence is unreliable or incorrect to establish a direct account holder's status as a foreign person if the withholding agent has a mailing or residence address (whether or not on the documentation) for the direct account holder in the United States or if the direct account holder notifies the withholding agent of a new address in the United States. A withholding agent may, however, rely on documentary evidence as establishing the direct account holder's foreign status if it may do so under the provisions of paragraph (b)(8)(ii)(A) or (B) of this section.

(A) A withholding agent may treat a direct account holder that is an individual as a foreign person even if it has a mailing or residence address for the direct account holder in the United States if the withholding agent—

(*1*) Has in its possession or obtains additional documentary evidence (which does not contain a U.S. address) supporting the claim of foreign status and a reasonable explanation in writing supporting the account holder's foreign status;

(*2*) Has in its possession or obtains a valid beneficial owner withholding certificate on Form W–8 and the Form W–8 contains a permanent residence address outside the United States and a mailing address outside the United States (or if a mailing address is inside the United States the direct account holder provides a reasonable explanation in writing supporting the direct account holder's foreign status); or

(*3*) The account is maintained at an office of the withholding agent outside the United States and the withholding agent is required to report annually a payment to the direct account holder on a tax information statement that is filed with the tax authority of the country in which the office is located and that country has an income tax treaty in effect with the United States.

(B) A withholding agent may treat a direct account holder that is an entity (other than a flow-through entity) as a foreign person even if it has a mailing or residence address for the direct account holder in the United States if the withholding agent—

(*1*) Has in its possession, or obtains, documentation that substantiates that the entity is actually organized or created under the laws of a foreign country;

(*2*) Obtains a valid beneficial owner withholding certificate on Form W–8 and the Form W–8 contains a permanent residence address outside the United States and a mailing address outside the United States (or if a mailing address is inside the United States the direct account holder provides additional documentary evidence sufficient to establish the direct account holder's foreign status); or

(*3*) The account is maintained at an office of the withholding agent outside the United States and the withholding agent is required to report annually a payment to the direct account holder on a tax information statement that is filed with the tax authority of the country in which the office is located and that country has an income tax treaty in effect with the United States.

(iii) Documentary evidence is unreliable or incorrect if the direct account holder has standing instructions directing the withholding agent to pay amounts from its account to an address or an account maintained in the United States. The withholding agent may treat the direct account holder as a foreign person, however, if the account holder provides a reasonable explanation in writing that supports its foreign status.

(9) *Documentary evidence—claim of reduced rate of withholding under treaty*. A withholding agent has reason to know that documentary evidence provided in connection with a payment of an amount described in §1.1441–6(c)(2) is unreliable or incorrect for purposes of establishing that a direct account holder is a resident of a country with which the United States has an income tax

treaty if it is described in paragraph (b)(9)(i) or (ii) of this section.

(i) Documentary evidence is unreliable or incorrect if the withholding agent has a mailing or residence address for the direct account holder (whether or not on the documentary evidence) that is outside the applicable treaty country, or the only address that the withholding agent has (whether in or outside of the applicable treaty country) is a P.O. box, an in-care-of address, or the address of a financial institution (if the financial institution is not the beneficial owner). If a withholding agent has a mailing or residence address for the direct account holder outside the applicable treaty country, the withholding agent may nevertheless treat a direct account holder as a resident of an applicable treaty country if the withholding agent—

(A) Has in its possession, or obtains, additional documentary evidence supporting the direct account holder's claim of residence in the applicable treaty country (and the documentary evidence does not contain an address outside the applicable treaty country, a P.O. box, an in-care-of address, or the address of a financial institution);

(B) Has in its possession, or obtains, documentary evidence that establishes the direct account holder is an entity organized in a treaty country (or an entity managed and controlled in a treaty country, if the applicable treaty so requires); or

(C) Obtains a valid beneficial owner withholding certificate on Form W–8 that contains a permanent residence address and a mailing address in the applicable treaty country.

(ii) Documentary evidence is unreliable or incorrect if the direct account holder has standing instructions directing the withholding agent to pay amounts from its account to an address or an account maintained outside the treaty country unless the direct account holder provides a reasonable explanation, in writing, establishing the direct account holder's residence in the applicable treaty country.

(10) *Limits on reason to know—indirect account holders.* A financial institution that receives documentation from a payee through a nonqualified intermediary, a flow-through entity, or a U.S. branch described in §1.1441–1(b)(2)(iv) (other than a U.S. branch that is treated as a U.S. person) with respect to a payment of an amount described in §1.1441–6(c)(2) has reason to know that the documentation is unreliable or incorrect if a reasonably prudent person in the position of a withholding agent would question the claims made. This standard requires, but is not limited to, a withholding agent's compliance with the rules of paragraphs (b)(10)(i) through (iii).

(i) The withholding agent must review the withholding statement described in §1.1441–1(e)(3)(iv) and may not rely on information in the statement to the extent the information does not support the claims made for any payee. For this purpose, a withholding agent may not treat a payee as a foreign person if an address in the United States is provided for such payee and may not treat a person as a resident of a country with which the United States has an income tax treaty if the address for that person is outside the applicable treaty country. Notwithstanding a U.S. address or an address outside a treaty country, the withholding agent may treat a payee as a foreign person or a foreign person as a resident of a treaty country if a reasonable explanation is provided, in writing, by the nonqualified intermediary, flow-through entity, or U.S. branch supporting the payee's foreign status or the foreign person's residency in a treaty country.

(ii) The withholding agent must review each withholding certificate in accordance with the requirements of paragraphs (b)(5) and (6) of this section and verify that the information on the withholding certificate is consistent with the information on the withholding statement required under §1.1441–1(e)(3)(iv). If there is a discrepancy between the withholding certificate and the withholding statement, the withholding agent may choose to rely on the withholding certificate, if valid, and instruct the nonqualified intermediary, flow-through entity, or U.S. branch to correct the withholding statement or apply the presumption rules of §§1.1441–1(b), 1.1441–5(d) and

(e)(6), and 1.6049–5(d) to the payment allocable to the payee who provided the withholding certificate. A withholding agent that receives a withholding certificate before December 31, 2001, is not required to review the information on withholding certificates or determine if it is consistent with the information on the withholding statement until December 31, 2001. A withholding agent may withhold and report in accordance with a withholding statement until December 31, 2001, unless it has actually performed the verification procedures required by this paragraph (b)(10)(ii) and determined that the withholding statement is inaccurate with respect to a particular payee.

(iii) The withholding agent must review the documentary evidence provided by the nonqualified intermediary, flow-through entity, or U.S. branch to determine that there is no obvious indication that the payee is a U.S. non-exempt recipient or that the documentary evidence does not establish the identity of the person who provided the documentation (*e.g.,* the documentary evidence does not appear to be an identification document).

(11) *Additional guidance.* The IRS may prescribe other circumstances for which a withholding certificate or documentary evidence is unreliable or incorrect in addition to the circumstances described in paragraph (b) of this section to establish an account holder's status as a foreign person or a beneficial owner entitled to a reduced rate of withholding in published guidance (see § 601.601(d)(2) of this chapter).

(c) *Authorized agent*—(1) *In general.* The acts of an agent of a withholding agent (including the receipt of withholding certificates, the payment of amounts of income subject to withholding, and the deposit of tax withheld) are imputed to the withholding agent on whose behalf it is acting. However, if the agent is a foreign person, a withholding agent that is a U.S. person may treat the acts of the foreign agent as its own for purposes of determining whether it has complied with the provisions of this section, but only if the agent is an authorized foreign agent, as defined in paragraph (c)(2) of this section. An authorized foreign agent cannot apply the provisions of this paragraph (c) to appoint another person its authorized foreign agent with respect to the payments it receives from the withholding agent.

(2) *Authorized foreign agent.* An agent is an authorized foreign agent only if—

(i) There is a written agreement between the withholding agent and the foreign person acting as agent;

(ii) The notification procedures described in paragraph (c)(3) of this section have been complied with;

(iii) Books and records and relevant personnel of the foreign agent are available (on a continuous basis, including after termination of the relationship) for examination by the IRS in order to evaluate the withholding agent's compliance with the provisions of chapters 3 and 61 of the Code, section 3406, and the regulations under those provisions; and

(iv) The U.S. withholding agent remains fully liable for the acts of its agent and does not assert any of the defenses that may otherwise be available, including under common law principles of agency in order to avoid tax liability under the Internal Revenue Code.

(3) *Notification.* A withholding agent that appoints an authorized agent to act on its behalf for purposes of § 1.871–14(c)(2), the withholding provisions of chapter 3 of the Code, section 3406 or other withholding provisions of the Internal Revenue Code, or the reporting provisions of chapter 61 of the Code, is required to file notice of such appointment with the Office of the Assistant Commissioner (International). Such notice shall be filed before the first payment for which the authorized agent acts as such. Such notice shall acknowledge the withholding agent liability as provided in paragraph (c)(2)(iv) of this section.

(4) *Liability of U.S. withholding agent.* An authorized foreign agent is subject to the same withholding and reporting obligations that apply to any withholding agent under the provisions of chapter 3 of the Code and the regulations thereunder. In particular, an authorized foreign agent does not benefit from the special procedures or exceptions that may apply to a qualified intermediary. A withholding agent acting through an authorized foreign

agent is liable for any failure of the agent, such as failure to withhold an amount or make payment of tax, in the same manner and to the same extent as if the agent's failure had been the failure of the U.S. withholding agent. For this purpose, the foreign agent's actual knowledge or reason to know shall be imputed to the U.S. withholding agent. The U.S. withholding agent's liability shall exist irrespective of the fact that the authorized foreign agent is also a withholding agent and is itself separately liable for failure to comply with the provisions of the regulations under section 1441, 1442, or 1443. However, the same tax, interest, or penalties shall not be collected more than once.

(5) *Filing of returns.* See § 1.1461–1(b)(2)(iii) and (c)(4)(iii) regarding returns required to be made where a U.S. withholding agent acts through an authorized foreign agent.

(d) *United States obligations.* If the United States is a withholding agent for an item of interest, including original issue discount, on obligations of the United States or of any agency or instrumentality thereof, the withholding obligation of the United States is assumed and discharged by—

(1) The Commissioner of the Public Debt, for interest paid by checks issued through the Bureau of the Public Debt;

(2) The Treasurer of the United States, for interest paid by him or her, whether by check or otherwise;

(3) Each Federal Reserve Bank, for interest paid by it, whether by check or otherwise; or

(4) Such other person as may be designated by the IRS.

(e) *Assumed obligations.* If, in connection with the sale of a corporation's property, payment on the bonds or other obligations of the corporation is assumed by a person, then that person shall be a withholding agent to the extent amounts subject to withholding are paid to a foreign person. Thus, the person shall withhold such amounts under § 1.1441–1 as would be required to be withheld by the seller or corporation had no such sale or assumption been made.

(f) *Conduit financing arrangements*—(1) *Liability of withholding agent.* Subject to paragraph (f)(2) of this section, any person that is required to deduct and withhold tax under § 1.1441–3(g) is made liable for that tax by section 1461. A person that is required to deduct and withhold tax but fails to do so is liable for the payment of the tax and any applicable penalties and interest.

(2) *Exception for withholding agents that do not know of conduit financing arrangement*—(i) *In general.* A withholding agent will not be liable under paragraph (f)(1) of this section for failing to deduct and withhold with respect to a conduit financing arrangement unless the person knows or has reason to know that the financing arrangement is a conduit financing arrangement. This standard shall be satisfied if the withholding agent knows or has reason to know of facts sufficient to establish that the financing arrangement is a conduit financing arrangement, including facts sufficient to establish that the participation of the intermediate entity in the financing arrangement is pursuant to a tax avoidance plan. A withholding agent that knows only of the financing transactions that comprise the financing arrangement will not be considered to know or have reason to know of facts sufficient to establish that the financing arrangement is a conduit financing arrangement.

(ii) *Examples.* The following examples illustrate the operation of paragraph (d)(2) of this section.

Example 1. (i) DS is a U.S. subsidiary of FP, a corporation organized in Country N, a country that does not have an income tax treaty with the United States. FS is a special purpose subsidiary of FP that is incorporated in Country T, a country that has an income tax treaty with the United States that prohibits the imposition of withholding tax on payments of interest. FS is capitalized with $10,000,000 in debt from BK, a Country N bank, and $1,000,000 in capital from FS.

(ii) On May 1, 1995, C, a U.S. person, purchases an automobile from DS in return for an installment note. On July 1, 1995, DS sells a number of installment notes, including C's, to FS in exchange for $10,000,000. DS continues to service the installment notes for FS and C is not notified of the sale of its obligation and continues to make payments to DS. But for the withholding tax on payments of interest by DS to BK, DS would have borrowed directly from BK, pledging the installment notes as collateral.

(iii) The C installment note is a financing transaction, whether held by DS or by FS,

and the FS note held by BK also is a financing transaction. After FS purchases the installment note, and during the time the installment note is held by FS, the transactions constitute a financing arrangement, within the meaning of §1.881–3(a)(2)(i). BK is the financing entity, FS is the intermediate entity, and C is the financed entity. Because the participation of FS in the financing arrangement reduces the tax imposed by section 881 and because there was a tax avoidance plan, FS is a conduit entity.

(iv) Because C does not know or have reason to know of the tax avoidance plan (and by extension that the financing arrangement is a conduit financing arrangement), C is not required to withhold tax under section 1441. However, DS, who knows that FS's participation in the financing arrangement is pursuant to a tax avoidance plan and is a withholding agent for purposes of section 1441, is not relieved of its withholding responsibilities.

Example 2. Assume the same facts as in *Example, 1* except that C receives a new payment booklet on which DS is described as ''agent''. Although C may deduce that its installment note has been sold, without more C has no reason to know of the existence of a financing arrangement. Accordingly, C is not liable for failure to withhold, although DS still is not relieved of its withholding responsibilities.

Example 3. (i) DC is a U.S. corporation that is in the process of negotiating a loan of $10,000,000 from BK1, a bank located in Country N, a country that does not have an income tax treaty with the United States. Before the loan agreement is signed, DC's tax lawyers point out that interest on the loan would not be subject to withholding tax if the loan were made by BK2, a subsidiary of BK1 that is incorporated in Country T, a country that has an income tax treaty with the United States that prohibits the imposition of withholding tax on payments of interest. BK1 makes a loan to BK2 to enable BK2 to make the loan to DC. Without the loan from BK1 to BK2, BK2 would not have been able to make the loan to DC.

(ii) The loan from BK1 to BK2 and the loan from BK2 to DC are both financing transactions and together constitute a financing arrangement within the meaning of §1.881–3(a)(2)(i). BK1 is the financing entity, BK2 is the intermediate entity, and DC is the financed entity. Because the participation of BK2 in the financing arrangement reduces the tax imposed by section 881 and because there is a tax avoidance plan, BK2 is a conduit entity.

(iii) Because DC is a party to the tax avoidance plan (and accordingly knows of its existence), DC must withhold tax under section 1441. If DC does not withhold tax on its payment of interest, BK2, a party to the plan and a withholding agent for purposes of section 1441, must withhold tax as required by section 1441.

Example 4. (i) DC is a U.S. corporation that has a long-standing banking relationship with BK2, a U.S. subsidiary of BK1, a bank incorporated in Country N, a country that does not have an income tax treaty with the United States. DC has borrowed amounts of as much as $75,000,000 from BK2 in the past. On January 1, 1995, DC asks to borrow $50,000,000 from BK2. BK2 does not have the funds available to make a loan of that size. BK2 considers asking BK1 to enter into a loan with DC but rejects this possibility because of the additional withholding tax that would be incurred. Accordingly, BK2 borrows the necessary amount from BK1 with the intention of on-lending to DC. BK1 does not make the loan directly to DC because of the withholding tax that would apply to payments of interest from DC to BK1. DC does not negotiate with BK1 and has no reason to know that BK1 was the source of the loan.

(ii) The loan from BK2 to DC and the loan from BK1 to BK2 are both financing transactions and together constitute a financing arrangement within the meaning of §1.881–3(a)(2)(i). BK1 is the financing entity, BK2 is the intermediate entity, and DC is the financed entity. The participation of BK2 in the financing arrangement reduces the tax imposed by section 881. Because the participation of BK2 in the financing arrangement reduces the tax imposed by section 881 and because there was a tax avoidance plan, BK2 is a conduit entity.

(iii) Because DC does not know or have reason to know of the tax avoidance plan (and by extension that the financing arrangement is a conduit financing arrangement), DC is not required to withhold tax under section 1441. However, BK2, who is also a withholding agent under section 1441 and who knows that the financing arrangement is a conduit financing arrangement, is not relieved of its withholding responsibilities.

(3) *Effective date.* This paragraph (f) is effective for payments made by financed entities on or after September 11, 1995. This paragraph shall not apply to interest payments covered by section 127(g)(3) of the Tax Reform Act of 1984, and to interest payments with respect to other debt obligations issued prior to October 15, 1984 (whether or not such debt was issued by a Netherlands Antilles corporation).

(g) *Effective date.* Except as otherwise provided in paragraph (f)(3) of this section, this section applies to payments made after December 31, 2000.

[T.D. 7977, 49 FR 36834, Sept. 20, 1984, as amended by T.D. 8611, 60 FR 41014, Aug. 11, 1995; 60 FR 55312, Oct. 31, 1995; T.D. 8734, 62 FR 53462, Oct. 14, 1997; T.D. 8804, 63 FR 72188, Dec. 31, 1998; T.D. 8856, 64 FR 73412, Dec. 30, 1999; T.D. 8881, 65 FR 32197, 32212, May 22, 2000; 66 FR 18189, Apr. 6, 2001]

§ 1.1441–8 Exemption from withholding for payments to foreign governments, international organizations, foreign central banks of issue, and the Bank for International Settlements.

(a) *Foreign governments.* Under section 892, certain specific types of income received by foreign governments are excluded from gross income and are exempt from taxation, unless derived from the conduct of a commercial activity or received from or by a controlled commercial entity. Accordingly, withholding is not required under § 1.1441.1 with regard to any item of income which is exempt from taxation under section 892.

(b) *Reliance on claim of exemption by foreign government.* Absent actual knowledge or reason to know otherwise, the withholding agent may rely upon a claim of exemption made by the foreign government if, prior to the payment, the withholding agent can reliably associate the payment with documentation upon which it can rely to treat the payment as made to a beneficial owner in accordance with § 1.1441–1(e)(1)(ii). A Form W–8 furnished by a foreign government for purposes of claiming an exemption under this paragraph (b) is valid only if, in addition to other applicable requirements, it certifies that the income is, or will be, exempt from taxation under section 892 and the regulations under that section and whether the person whose name is on the certificate is an integral part of a foreign government (as defined in § 1.892–2T(a)(2)) or a controlled entity (as defined in § 1.892–2T(a)(3)).

(c) *Income of a foreign central bank of issue or the Bank for International Settlements*—(1) *Certain interest income.* Section 895 provides for the exclusion from gross income of certain income derived by a foreign central bank of issue, or by the Bank for International Settlements, from obligations of the United States or of any agency or instrumentality thereof or from interest on deposits with persons carrying on the banking business if the bank is the owner of the obligations or deposits and does not hold the obligations or deposits for, or use them in connection with, the conduct of a commercial banking function or other commercial activity by such bank. See § 1.895–1. Absent actual knowledge or reason to know that a foreign central bank of issue, or the Bank for International Settlements, is operating outside the scope of the exclusion granted by section 895 and the regulations under that section, the withholding agent may rely on a claim of exemption if, prior to the payment, the withholding agent can reliably associate the payment with documentation upon which it can rely to treat the foreign central bank of issue or the Bank for International Settlements as the beneficial owner of the payment in accordance with § 1.1441–1(e)(1)(ii). A Form W–8 furnished by a foreign central bank of issue or the Bank for International Settlements for purposes of claiming an exemption under this paragraph (c)(1) is valid only if, in addition to other applicable requirements, it certifies that the person whose name is on the certificate is a foreign central bank of issue, or the Bank for International Settlements, and that the bank does not, and will not, hold the obligations or the bank deposits covered by the Form W–8 for, or use them in connection with, the conduct of a commercial banking function or other commercial activity.

(2) *Bankers acceptances.* Interest derived by a foreign central bank of issue from bankers acceptances is exempt from tax under sections 871(i)(2)(C) and 881(d) and § 1.861–2(b)(4). With respect to bankers' acceptances, a withholding agent may treat a payee as a foreign central bank of issue without requiring a withholding certificate if the name of the payee and other facts surrounding the payment reasonably indicate that the payee or beneficial owner is a foreign central bank of issue, as defined in § 1.861–2(b)(4).

(d) *Exemption for payments to international organizations.* A payment to an international organization (within the meaning of section 7701(a)(18)) is exempt from withholding on any payment. A withholding agent may treat a payee as an international organization without requiring a withholding certificate if the name of the payee is one that is designated as an international organization by executive order (pursuant to 22 U.S.C. 288 through 288(f)) and other facts surrounding the transaction reasonably indicate that the international organization is the beneficial owner of the payment.

(e) *Failure to receive withholding certificate timely and other applicable procedures.* See applicable procedures described in §1.1441–1(b)(7) in the event the withholding agent does not hold a valid withholding certificate described in paragraph (b) or (c)(1) of this section or other appropriate documentation at the time of payment. Further, the provisions of §1.1441–1(e)(4) shall apply to withholding certificates and other documents related thereto furnished under the provisions of this section.

(f) *Effective date*—(1) *In general.* This section applies to payments made after December 31, 2000.

(2) *Transition rules.* For purposes of this section, the validity of a Form 8709 that was valid on January 1, 1998, under the regulations in effect prior to January 1, 2001 (see 26 CFR part 1, revised April 1, 1999) and expired, or will expire, at any time during 1998, is extended until December 31, 1998. The validity of a Form 8709 that is valid on or after January 1, 1999, remains valid until its validity expires under the regulations in effect prior to January 1, 2001 (see 26 CFR part 1, revised April 1, 1999) but in no event shall such a form remain valid after December 31, 2000. The rule in this paragraph (f)(2), however, does not apply to extend the validity period of a Form 8709 that expires solely by reason of changes in the circumstances of the person whose name is on the certificate. Notwithstanding the first three sentences of this paragraph (f)(2), a withholding agent may choose to not take advantage of the transition rule in this paragraph (f)(2) with respect to one or more withholding certificates valid under the regulations in effect prior to January 1, 2001 (see 26 CFR part 1, revised April 1, 1999) and, therefore, to require withholding certificates conforming to the requirements described in this section (new withholding certificates). For purposes of this section, a new withholding certificate is deemed to satisfy the documentation requirement under the regulations in effect prior to January 1, 2001 (see 26 CFR part 1, revised April 1, 1999). Further, a new withholding certificate remains valid for the period specified in §1.1441–1(e)(4)(ii), regardless of when the certificate is obtained.

[T.D. 8211, 53 FR 24066, June 27, 1988, as amended at T.D. 8211, 53 FR 27595, July 21, 1988; Redesignated and amended by T.D. 8734, 62 FR 53464, Oct. 14, 1997; T.D. 8804, 63 FR 72185, Dec. 31, 1998; 64 FR 73410, Dec. 30, 1999]

§1.1441–9 Exemption from withholding on exempt income of a foreign tax-exempt organization, including foreign private foundations.

(a) *Exemption from withholding for exempt income.* No withholding is required under section 1441(a) or 1442, and the regulations under those sections, on amounts paid to a foreign organization that is described in section 501(c) to the extent that the amounts are not income includable under section 512 in computing the organization's unrelated business taxable income. See, however, §1.1443–1 for withholding on payments of unrelated business income to foreign tax-exempt organizations and on payments subject to tax under section 4948. For a foreign organization to claim an exemption from withholding under section 1441(a) or 1442 based on its status as an organization described in section 501(c), it must furnish the withholding agent with a withholding certificate described in paragraph (b)(2) of this section. A foreign organization described in section 501(c) may choose to claim a reduced rate of withholding under the procedures described in other sections of the regulations under section 1441 and not under this section. In particular, if an organization chooses to claim benefits under an income tax treaty, the withholding procedures applicable to claims of such a reduced

rate are governed solely by the provisions of § 1.1441–6 and not of this section.

(b) *Reliance on foreign organization's claim of exemption from withholding*—(1) *General rule.* A withholding agent may rely on a claim of exemption under this section only if, prior to the payment, the withholding agent can reliably associate the payment with a valid withholding certificate described in paragraph (b)(2) of this section.

(2) *Withholding certificate.* A withholding certificate under this paragraph (b)(2) is valid only if it is a Form W–8 and if, in addition to other applicable requirements, the Form W–8 includes the taxpayer identifying number of the organization whose name is on the certificate, and it certifies that the Internal Revenue Service (IRS) has issued a favorable determination letter (and the date thereof) that is currently in effect, what portion, if any, of the amounts paid constitute income includible under section 512 in computing the organization's unrelated business taxable income, and, if the organization is described in section 501(c)(3), whether it is a private foundation described in section 509. Notwithstanding the preceding sentence, if the organization cannot certify that it has been issued a favorable determination letter that is still in effect, its withholding certificate is nevertheless valid under this paragraph (b)(2) if the organization attaches to the withholding certificate an opinion that is acceptable to the withholding agent from a U.S. counsel (or any other person as the IRS may prescribe in published guidance (see § 601.601(d)(2) of this chapter)) concluding that the organization is described in section 501(c). If the determination letter or opinion of counsel to which the withholding certificate refers concludes that the organization is described in section 501(c)(3), and the certificate further certifies that the organization is not a private foundation described in section 509, an affidavit of the organization setting forth sufficient facts concerning the operations and support of the organization for the Internal Revenue Service (IRS) to determine that such organization would be likely to qualify as an organization described in section 509(a)(1), (2), (3), or (4) must be attached to the withholding certificate. An organization that provides an opinion of U.S. counsel or an affidavit may provide the same opinion or affidavit to more than one withholding agent provided that the opinion is acceptable to each withholding agent who receives it in conjunction with a withholding certificate. Any such opinion of counsel or affidavit must be renewed whenever there is a change in facts or circumstances that are relevant to determine the organization's status under section 501(c) or, if relevant, that the organization is or is not a private foundation described in section 509.

(3) *Presumptions in the absence of documentation.* Notwithstanding paragraph (b)(1) of this section, if the organization's certification with respect to whether amounts paid constitute income includable under section 512 in computing the organization's unrelated business taxable income is not reliable or is lacking but all other certifications are reliable, the withholding agent may rely on the certificate but the amounts paid are presumed to be income includable under section 512 in computing the organization's unrelated business taxable income. If the certification regarding private foundation status is not reliable, the withholding agent may rely on the certificate but the amounts paid are presumed to be paid to a foreign beneficial owner that is a private foundation.

(4) *Reason to know.* Reliance by a withholding agent on the information and certifications stated on a withholding certificate is subject to the agent's actual knowledge or reason to know that such information or certification is incorrect as provided in § 1.1441–7(b). For example, a withholding agent must cease to treat a foreign organization's claim for exemption from withholding based on the organization's tax-exempt status as valid beginning on the earlier of the date on which such agent knows that the IRS has given notice to such foreign organization that it is not an organization described in section 501(c) or the date on which the IRS gives notice to the public that such foreign organization is not an organization described in section 501(c). Similarly, a withholding

agent may no longer rely on a certification that an amount is not subject to tax under section 4948 beginning on the earlier of the date on which such agent knows that the IRS has given notice to such foreign organization that it is subject to tax under section 4948 or the date on which the IRS gives notice that such foreign organization is a private foundation within the meaning of section 509(a).

(c) *Failure to receive withholding certificate timely and other applicable procedures.* See applicable procedures described in §1.1441–1(b)(7) in the event the withholding agent does not hold a valid withholding certificate or other appropriate documentation at the time of payment. Further, the provisions of §1.1441–1(e)(4) shall apply to withholding certificates and other documents related thereto furnished under the provisions of this section.

(d) *Effective date*—(1) *In general.* This section applies to payments made after December 31, 2000.

(2) *Transition rules.* For purposes of this section, the validity of a Form W–8, 1001, or 4224 or a statement that was valid on January 1, 1998, under the regulations in effect prior to January 1, 2001 (see 26 CFR parts 1 and 35a, revised April 1, 1999) and expired, or will expire, at any time during 1998, is extended until December 31, 1998. The validity of a Form W–8, 1001, or 4224 or a statement that is valid on or after January 1, 1999 remains valid until its validity expires under the regulations in effect prior to January 1, 2001 (see 26 CFR parts 1 and 35a, revised April 1, 1999) but in no event shall such form or statement remain valid after December 31, 2000. The rule in this paragraph (d)(2), however, does not apply to extend the validity period of a Form W–8, 1001, or 4224 or a statement that expires solely by reason of changes in the circumstances of the person whose name is on the certificate. Notwithstanding the first three sentences of this paragraph (d)(2), a withholding agent may choose to not take advantage of the transition rule in this paragraph (d)(2) with respect to one or more withholding certificates valid under the regulations in effect prior to January 1, 2001 (see 26 CFR parts 1 and 35a, revised April 1, 1999) and, therefore, to require withholding certificates conforming to the requirements described in this section (new withholding certificates). For purposes of this section, a new withholding certificate is deemed to satisfy the documentation requirement under the regulations in effect prior to January 1, 2001 (see 26 CFR parts 1 and 35a, revised April 1, 1999). Further, a new withholding certificate remains valid for the period specified in §1.1441-1(e)(4)(ii), regardless of when the certificate is obtained.

[T.D. 8734, 62 FR 53465, Oct. 14, 1997, as amended by T.D. 8804, 63 FR 72185, Dec. 31, 1998; T.D. 8856, 64 FR 73410, Dec. 10, 1999; T.D. 8881, 65 FR 32201, May 22, 2000]

§1.1441–10 Withholding agents with respect to fast-pay arrangements.

(a) *In general.* A corporation that issues fast-pay stock in a fast-pay arrangement described in §1.7701(l)–3(b)(1) is a withholding agent with respect to payments made on the fast-pay stock and payments deemed made under the recharacterization rules of §1.7701(l)–3. Except as provided in this paragraph (a) or in paragraph (b) of this section, the withholding tax rules under section 1441 and section 1442 apply with respect to a fast-pay arrangement described in §1.7701(l)–3(c)(1)(i) in accordance with the recharacterization rules provided in §1.7701(l)–3(c). In all cases, notwithstanding paragraph (b) of this section, if at any time the withholding agent knows or has reason to know that the Commissioner has exercised the discretion under either §1.7701(l)–3(c)(1)(ii) to apply the recharacterization rules of §1.7701(l)–3(c), or §1.7701(l)–3(d) to depart from the recharacterization rules of §1.7701(l)–3(c) for a taxpayer, the withholding agent must withhold on payments made (or deemed made) to that taxpayer in accordance with the characterization of the fast-pay arrangement imposed by the Commissioner under §1.7701(l)–3.

(b) *Exception.* If at any time the withholding agent knows or has reason to know that any taxpayer entered into a fast-pay arrangement with a principal purpose of applying the recharacterization rules of §1.7701(l)–3(c) to avoid tax under section 871(a) or section 881, then for each payment made or deemed

made to such taxpayer under the arrangement, the withholding agent must withhold, under section 1441 or section 1442, the higher of—

(1) The amount of withholding that would apply to such payment determined under the form of the arrangement; or

(2) The amount of withholding that would apply to deemed payments determined under the recharacterization rules of § 1.7701(l)–3(c).

(c) *Liability.* Any person required to deduct and withhold tax under this section is made liable for that tax by section 1461, and is also liable for applicable penalties and interest for failing to comply with section 1461.

(d) *Examples.* The following examples illustrate the rules of this section:

Example 1. REIT W issues shares of fast-pay stock to foreign individual A, a resident of Country C. United States source dividends paid to residents of C are subject to a 30 percent withholding tax. W issues all shares of benefited stock to foreign individuals who are residents of Country D. D's income tax convention with the United States reduces the United States withholding tax on dividends to 15 percent. Under § 1.7701(l)–3(c), the dividends paid by W to A are deemed to be paid by W to the benefited shareholders. W has reason to know that A entered into the fast-pay arrangement with a principal purpose of using the recharacterization rules of § 1.7701(l)–3(c) to reduce United States withholding tax. W must withhold at the 30 percent rate because the amount of withholding that applies to the payments determined under the form of the arrangement is higher than the amount of withholding that applies to the payments determined under § 1.7701(l)–3(c).

Example 2. The facts are the same as in *Example 1* of this paragraph (d) except that W does not know, or have reason to know, that A entered into the arrangement with a principal purpose of using the recharacterization rules of § 1.7701(l)–3(c) to reduce United States withholding tax. Further, the Commissioner has not exercised the discretion under § 1.7701(l)–3(d) to depart from the recharacterization rules of § 1.7701(l)–3(c). Accordingly, W must withhold tax at a 15 percent rate on the dividends deemed paid to the benefited shareholders.

(e) *Effective date.* This section applies to payments made (or deemed made) on or after January 6, 1999.

[T.D. 8853, 65 FR 1312, Jan. 10, 2000]

§ 1.1442–1 Withholding of tax on foreign corporations.

For regulations concerning the withholding of tax at source under section 1442 in the case of foreign corporations, foreign governments, international organizations, foreign tax-exempt corporations, or foreign private foundations, see §§ 1.1441–1 through 1.1441–9.

[T.D. 8734, 62 FR 53466, Oct. 14, 1997]

§ 1.1442–2 Exemption under a tax treaty.

For regulations providing for a claim of reduced withholding tax under section 1442 by certain foreign corporations pursuant to the provisions of an income tax treaty, see § 1.1441–6.

[T.D. 8734, 62 FR 53466, Oct. 14, 1997]

§ 1.1442–3 Tax exempt income of a foreign tax-exempt corporations.

For regulations providing for a claim of exemption for income exempt from tax under section 501(a) of a foreign tax-exempt corporation, see § 1.1441–9. See § 1.1443–1 for withholding rules applicable to foreign private foundations and to the unrelated business income of foreign tax-exempt organizations.

[T.D. 8734, 62 FR 53466, Oct. 14, 1997]

§ 1.1443–1 Foreign tax-exempt organizations.

(a) *Income includible in computing unrelated business taxable income.* In the case of a foreign organization that is described in section 501(c), amounts paid or effectively connected taxable income allocable to the organization that are includible under section 512 and section 513 in computing the organization's unrelated business taxable income are subject to withholding under §§ 1.1441–1, 1.1441–4, 1.1441–6, and 1.1446–1 through 1.1446–6T, in the same manner as payments or allocations of effectively connected taxable income of the same amounts made to any foreign person that is not a tax-exempt organization. Therefore, a foreign organization receiving amounts includible under section 512 and section 513 in computing the organization's unrelated business taxable income may claim an exemption from withholding or a reduced rate of withholding with respect to that income in the same manner as

a foreign person that is not a tax-exempt organization. See § 1.1441–9(b)(3) for a presumption that amounts are includible under section 512 and section 513 in computing the organization's unrelated business taxable income in the absence of reliable certification. See also § 1.1446–3(c)(3), applying this presumption in the context of section 1446.

(b) *Income subject to tax under section 4948*—(1) *In general.* The gross investment income (as defined in section 4940(c)(2)) of a foreign private foundation is subject to withholding under section 1443(b) at the rate of 4 percent to the extent that the income is from sources within the United States and is subject to the tax imposed by section 4948(a) and the regulations under that section. Withholding under this paragraph (b) is required irrespective of the fact that the income may be effectively connected with the conduct of a trade or business in the United States by the foreign organization. See § 1.1441–9(b)(3) for applicable presumptions that amounts are subject to tax under section 4948. The withholding imposed under this paragraph (b)(1) does not obviate a private foundation's obligation to file any return required by law with respect to such organization, such as the form that the foundation is required to file under section 6033 for the taxable year.

(2) *Reliance on a foreign organization's claim of foreign private foundation status.* For reliance by a withholding agent on a foreign organization's claim of foreign private foundation status, see § 1.1441–9 (b) and (c).

(3) *Applicable procedures.* A withholding agent withholding the 4-percent amount pursuant to paragraph (b)(1) of this section shall treat such withholding as withholding under section 1441(a) or 1442(a) for all purposes, including reporting of the payment on a Form 1042 and a Form 1042–S pursuant to § 1.1461–1 (b) and (c). Similarly, the foreign private foundation shall treat the 4-percent withholding as withholding under section 1441(a) or 1442(a), including for purposes of claims for refunds and credits.

(4) *Claim of benefits under an income tax treaty.* The withholding procedures applicable to claims of a reduced rate under an income tax treaty are governed solely by the provisions of § 1.1441–6 and not by this section.

(c) *Effective date*—(1) *In general.* This section applies to payments made after December 31, 2000, except that the references in paragraph (a) of this section to effectively connected taxable income and withholding under section 1446 shall apply to partnership taxable years beginning after May 18, 2005, or such earlier time as the regulations under §§ 1.1446–1 through 1.1446–5 apply by reason of an election under § 1.1446–7.

(2) *Transition rules.* For purposes of this section, the validity of an affidavit or opinion of counsel described in § 1.1443–1(b)(4)(i) in effect prior to January 1, 2001 (see § 1.1443–1(b)(4)(i) as contained in 26 CFR part 1, revised April 1, 1999) is extended until December 31, 2000. However, a withholding agent may choose to not take advantage of the transition rule in this paragraph (c)(2) with respect to one or more withholding certificates valid under the regulations in effect prior to January 1, 2001 (see 26 CFR part 1, revised April 1, 1999) and, therefore, to require withholding certificates conforming to the requirements described in this section (new withholding certificates). For purposes of this section, a new withholding certificate is deemed to satisfy the documentation requirement under the regulations in effect prior to January 1, 2001 (see 26 CFR part 1, revised April 1, 1999). Further, a new withholding certificate remains valid for the period specified in § 1.1441–1(e)(4)(ii), regardless of when the certificate is obtained.

[T.D. 8734, 62 FR 53466, Oct. 14, 1997, as amended by T.D. 8804, 63 FR 72186, Dec. 31, 1998; T.D. 8856, 64 FR 73411, Dec. 30, 1999; T.D. 9200, 70 FR 28717, May 18, 2005]

§ 1.1445–1 Withholding on dispositions of U.S. real property interests by foreign persons: In general.

(a) *Purpose and scope of regulations.* These regulations set forth rules relating to the withholding requirements of section 1445. In general, section 1445(a) provides that any person who acquires a U.S. real property interest from a foreign person must withhold a tax of 10 percent from the amount realized by

the transferor foreign person (or a lesser amount established by agreement with the Internal Revenue Service). Section 1445(e) provides special rules requiring withholding on distributions and certain other transactions by corporations, partnerships, trusts, and estates. This §1.1445–1 provides general rules concerning the withholding requirement of sections 1445(a), as well as definitions applicable under both section 1445(a) and 1445(e). Section 1.1445–2 provides for various situations in which withholding is not required under section 1445(a). Section 1.1445–3 provides for adjustments to the amount required to be withheld by transferees under section 1445(a). Section 1.1445–4 prescribes the duties of agents in transactions subject to withholding under either section 1445(a) or 1445(e). Section 1.1445–5 provides rules concerning the withholding required under section 1445(e), while §1.1445–6 provides for adjustments to the amount required to be withheld under section 1445(e). Finally, §1.1445–7 provides rules concerning the treatment of a foreign corporation that has made an election under section 897(i) to be treated as a domestic corporation.

(b) *Duty to withhold*—(1) *In general.* Transferees of U.S. real property interests are required to deduct and withhold a tax equal to 10 percent of the amount realized by the transferor, if the transferor is a foreign person and the disposition takes place on or after January 1, 1985. Neither the transferee's duty to withhold nor the amount required to be withheld is affected by the amount of cash to be paid by the transferee. Amounts withheld must be reported and paid over in accordance with the requirements of paragraph (c) of this section. Failures to withhold and pay over are subject to the liabilities set forth in paragraph (e) of this section. If two or more persons are joint transferees of a U.S. real property interest, each such person is subject to the obligation to withhold. That obligation is fulfilled with respect to each such person if any one of them withholds and pays over the required amount in accordance with the rules of this section. If the amount realized (as defined in paragraph (g)(5) of this section) by the transferor is zero, then no withholding is required. For example, if a real property interest is transferred as a gift (i.e, the recipient does not assume any liabilities or furnish any other consideration to the transferor) then no withholding is required. Withholding is not required with respect to dispositions that takes place before January 1, 1985, even if the first payment of consideration is made after December 31, 1984.

(2) *U.S. real property interest owned jointly by foreign and non-foreign transferors.* The amount subject to withholding under paragraph (b)(1) of this section with respect to the transfer of a U.S. real property interest owned by one or more foreign persons (as defined in §1.897–1(k)) and one or more non-foreign persons shall be determined by allocating the amount realized from the transfer between (or among) such transferors based upon the capital contribution of each transferor with respect to the property and by aggregating the amounts allocated to any foreign person (or persons). For this purpose, a husband and wife will each be deemed to have contributed 50 percent of the aggregate capital contributed by such husband and wife. See §1.1445–1(f)(3)(iv) with respect to the crediting of the amount withheld between or among joint foreign transferors.

(3) *Options to acquire a U.S. real property interest*—(i) *No withholding on grant of option.* No withholding is required under section 1445 with respect to any amount realized by the grantor on the grant of an option to acquire a U.S. real property interest.

(ii) *No withholding upon lapse of option.* No withholding is required under section 1445 with respect to any amount realized by the grantor upon the lapse of an option to acquire a U.S. real property interest.

(iii) *Withholding required upon the sale or exchange of option.* A transferee of an option to acquire a U.S. real property interest must deduct and withhold a tax equal to 10 percent of the amount realized by the transferor upon the disposition. This §1.1445–1(b)(3)(iii) does not apply to require withholding upon the initial grant of an option.

(iv) *Withholding required on exercise of option.* If the holder exercises an option

to purchase a U.S. real property interest, the amount paid for the option shall be considered an amount realized by the grantor/transferor upon the transfer of the property with respect to which the option was granted, and shall thus be subject to withholding on the day that such underlying property is transferred. The preceding sentence applies regardless of whether or not the terms of the option specifically provide that the option price is applied to the purchase price.

(4) Exceptions and modifications. The duty to withhold under section 1445(a) is subject to the exceptions and modifications contained in §§1.1445–2 and 1.1445–3. Generally, §1.1445–2 provides rules for determining that withholding is not required because either the transferor is not a foreign person or the interest transferred is not a U.S. real property interest. In addition, §1.1445–2 provides exceptions to the withholding requirement, including a rule that exempts from withholding any person who acquires a U.S. real property interest for use as a residence for a contract price of $300,000 or less. If withholding is required under section 1445(a), §1.1445–3 allows the amount withheld to be modified pursuant to a withholding certificate issued by the Internal Revenue Service. If a transferee cannot withhold the full amount required because the first payment of consideration for the transfer does not involve sufficient cash (or other liquid assets convertible into cash, such as foreign currency), then a withholding certificate must be obtained pursuant to §1.1445–3.

(c) *Reporting and paying over of withheld amounts*—(1) *In general.* A transferee must report and pay over any tax withheld by the 20th day after the date of the transfer. Forms 8288 and 8288–A are used for this purpose, and must be filed at the location as provided in the instructions to Forms 8288 and 8288–A. Pursuant to section 7502 and regulations thereunder, the timely mailing of Forms 8288 and 8228–A will be treated as their timely filing. Form 8288–A will be stamped by the IRS to show receipt, and a stamped copy will be mailed by the IRS to the transferor (at the address reported on the form) for the transferor's use. See §§1.1445–1(f) and 1.1445–3(f). Forms 8288 and 8288–A are required to include the identifying numbers of both the transferor and the transferee, as provided in paragraph (d) of this section. If any identifying number as required by such forms is not provided, the transferee must still report and pay over any tax withheld on Form 8288, although the transferor cannot obtain a credit or refund of tax on the basis of a Form 8288–A that does not include the transferor's identifying number (see paragraph (f)(2) of this section).

(2) *Pending application for withholding certificate*—(i) *In general. (A) Delayed reporting and payment with respect to application submitted by transferee.* If an application for a withholding certificate with respect to a transfer of a U.S. real property interest is submitted to the Internal Revenue Service by the transferee on the day of or at any time prior to the transfer, the transferee must withhold 10 percent of the amount realized as required by paragraph (b) of this section. However, the amount withheld, or a lesser amount as determined by the Service, need not be reported and paid over to the Service until the 20th day following the Service's final determination with respect to the application for a withholding certificate. For this purpose, the Service's final determination occurs on the day when the withholding certificate is mailed to the transferee by the Service or when a notification denying the request for a withholding certificate is mailed to the transferee by the Service. An application is submitted to the Service on the day it is actually received by the Service at the address provided in §1.1445–1(g)(10) or, under the rules of section 7502, on the day it is mailed to the Service at the address provided in §1.1445–1(g)(10).

(B) *Delayed reporting and payment with respect to application submitted by transferor.* If an application for a withholding certificate with respect to a transfer of a U.S. real property interest is submitted to the Internal Revenue Service by the Transferor on the day of or any time prior to the transfer, such transferor must provide notice to the transferee prior to the transfer. No particular form is required but the notice must set forth the name, address, and

taxpayer identification number of the transferor, a brief description of the property which is the subject of the application, and the date the application was submitted to the Service. The transferee must withhold 10 percent of the amount realized as required in paragraph (b) of this section but need not report or pay over to the Service such amount (or a lesser amount as determined by the Service) until the 20th day following the Service's final determination with respect to the application. The Service will send a copy of the withholding certificate or copy of the notification denying the request for a withholding certificate to the transferee. For this purpose, the Service's final determination will be deemed to occur on the day when the copy of the withholding certificate or the copy of the notification denying the request for a withholding certificate is mailed by the Service to the transferee (or transferees). An application is submitted to the Service on the day it is actually received by the Service at the address provided in §1.1445–1(g)(10) or, under the rules of §7502, on the day it is mailed to the Service at the address provided in §1.1445–1(g)(10).

(ii) *Anti-abuse rule*—(A) *In general.* A transferee that in reliance upon the rules of this paragraph (c)(2) fails to report and pay over amounts withheld by the 20th day following the date of the transfer, shall be subject to the payment of interest and penalties if the relevant application for a withholding certificate (or an amendment to the application for a withholding certificate) was submitted for a principal purpose of delaying the transferee's payment to the IRS of the amount withheld. Interest and penalties shall be assessed on the amount that is ultimately paid over (or collected pursuant to the agreement) with respect to the period between the 20th day after the date of the transfer and the date on which payment is made (or collected).

(B) *Presumption.* A principal purpose of delaying payment of the amount withheld shall be presumed if—

(*1*) The transferee applies for a withholding certificate pursuant to §1.1445–3(c) based on a determination of the transferor's maximum tax liability, and

(*2*) Such liability is ultimately determined to be equal to 90 percent or more of the amount that was otherwise required to be withheld and paid over. However, the presumption created by the previous sentence may be rebutted by evidence establishing that delaying payment of the amount withheld was not a principal purpose of the transaction.

(d) *Contents of Forms 8288 and 8288–A*—(1) *Transactions subject to section 1445(a).* Any person that is required to file Forms 8288 and 8288–A pursuant to section 1445(a) and the rules of this section must set forth thereon the following information:

(i) The name, identifying number, and home address (in the case of an individual) or office address (in the case of any entity) of the transferee(s) filing the return;

(ii) The name, identifying number, and home address (in the case of an individual) or office address (in the case of any entity) of the transferor(s);

(iii) A brief description of the U.S. real property interest transferred, including its location and the nature of any substantial improvements in the case of real property, and the class or type and amount of interests transferred in the case of interests in a corporation that constitute U.S. real property interests;

(iv) The date of the transfer;

(v) The amount realized by the transferor, as defined in paragraph (g)(5) of this section;

(vi) The amount withheld by the transferee and whether withholding is at the statutory or reduced rate; and

(vii) Such other information as the Commissioner may require.

For purposes of paragraph (d)(1) (i) and (ii), mailing addresses may be provided in addition to, but not in lieu of, home addresses or office addresses.

(2) *Transactions subject to section 1445(e).* Any person that is required to file Forms 8288 and 8288–A pursuant to the rules of §1.1445–5 must set forth thereon the following information:

(i) The name, identifying number, and office address of the entity or fiduciary filing the return;

(ii) The amount withheld by the entity or fiduciary;

(iii) The date of the transfer;

(iv) In the case of a transaction subject to withholding pursuant to section 1445(e)(1) and § 1.1445–5(c):

(A) A brief description of the U.S. real property interest transferred, as described in paragraph (d)(1)(iii) of this section;

(B) The name, identifying number, and home address (in the case of an individual) or office address (in the case of an entity) of each holder of an interest in the entity that is a foreign person; and

(C) Each such interest-holder's pro rata share of the amount withheld;

(v) In the case of a distribution subject to withholding pursuant to section 1445(e)(2) and § 1.1445–5(d):

(A) A brief description of the U.S. real property interest transferred, as described in paragraph (d)(1)(iii) of this section; and

(B) The amount of gain recognized upon the distribution by the corporation.

(vi) In the case of a distribution subject to withholding pursuant to section 1445(e)(3) and § 1.1445–5(e):

(A) A brief description of the property distributed by the corporation;

(B) The name, identifying number, and home address (in case of an individual) or office address (in the case of an entity) of each holder of an interest in the entity that is a foreign person;

(C) The amount realized upon the distribution by each such foreign interest holder; and

(D) Each foreign interest-holder's pro rata share of the amount withheld; and

(vii) Such other information as the Commissioner may require.

(e) *Liability of transferee upon failure to withhold*—(1) *In general.* Every person required to deduct and withhold tax under section 1445 is made liable for that tax by section 1461. Therefore, a person that is required to deduct and withhold tax but fails to do so may be held liable for the payment of the tax and any applicable penalties and interest.

(2) *Transferor's liability not otherwise satisfied*—(i) *Tax and penalties.* Except as provided in paragraph (e)(3) of this section, if a transferee is required to deduct and withhold tax under section 1445 but fails to do so, then the tax shall be assessed against and collected from that transferee. Such person may also be subject to any of the civil and criminal penalties that apply. Corporate officers or other responsible persons may be subject to a civil penalty under section 6672 equal to the amount that should have been withheld and paid over.

(ii) *Interest.* If a transferee is required to deduct and withhold tax under section 1445 but fails to do so, then such transferee shall be liable for the payment of interest pursuant to section 6601 and the regulations thereunder. Interest shall be payable with respect to the period between—

(A) The last date on which the tax imposed under section 1445 was required to be paid over by the transferee, and

(B) The date on which such tax is actually paid. Interest shall be payable with respect to the entire amount that is required to be deducted and withheld. However, if the Service issues a withholding certificate providing for withholding of a reduced amount, then, for the period after the issuance of the certificate, interest shall be payable with respect to that reduced amount.

(3) *Transferor's liability otherwise satisfied*—(i) *Tax and penalties.* If a transferee is required to deduct and withhold tax under section 1445 but fails to do so, and the transferor's tax liability with respect to the transfer was satisfied (or was established to be zero) by—

(A) The transferor's filing of an income tax return (and payment of any tax due) with respect to the transfer, or

(B) The issuance of a withholding certificate by the Internal Revenue Service establishing that the transferor's maximum tax liability is zero,

then the tax required to be withheld under section 1445 shall not be collected from the transferee. Such transferee's liability for tax, and the requirement that such person file Forms 8288 and 8288–A, shall be deemed to have been satisfied as of the date on which the transferor's income tax return was filed or the withholding certificate was issued. No penalty shall be imposed on or collected from such person for failure to return or pay the tax, unless such failure was fraudulent and for the purpose of evading payment. A

transferee that seeks to avoid liability for tax and penalties pursuant to the rule of paragraph (e)(3)(i) must provide sufficient information for the Service to determine whether the transferor's tax liability was satisfied (or was established to be zero).

(ii) *Interest.* If a transferee is required to deduct and withhold tax under section 1445 but fails to do so, then such person shall be liable for the payment of interest under section 6601 and regulations thereunder. Such transferee's liability for the payment of interest shall not be excused by reason of the deemed satisfaction, pursuant to subdivision (i) of this paragraph (e)(3), of the transferee's liability under section 1445, because the deemed satisfaction of that liability is the equivalent of the late payment of a liability, on which interest must be paid. Interest shall be payable with respect to the period between—

(A) The last date on which the tax imposed under section 1445 was required to be paid over, and

(B) The date (established from information supplied to the Service by the transferee) on which any tax due is paid with respect to the transferor's relevant income tax return, or the date the withholding certificate is issued establishing that the transferor's maximum tax liability is zero.

Interest shall be payable with respect to the entire amount that is required to be deducted and withheld. However, if the Service issues a withholding certificate providing for withholding of a reduced amount, then for the period after the issuance of the certificate interest shall be payable with respect to that reduced amount.

(4) *Coordination with entity with holding rules.* For purposes of section 1445(e) and §§ 1.1445–5, 1.1445–6, 1.1445–7, and 1.1445–8T, the rules of this paragraph (e) shall be applied by—

(i) Substituting the words ''person required to withhold'' for the word ''transferee'' each place it appears in this paragraph (e), and

(ii) Substituting the words ''person subject to withholding'' for the word ''transferor'' each place it appears in this paragraph (e).

(f) *Effect of withholding on transferor*—(1) *In general.* The withholding of tax under section 1445(a) does not excuse a foreign person that disposes of a U.S. real property interest from filing a U.S. tax return with respect to the income arising from the disposition. Form 1040NR, 1041, or 1120F, as appropriate, must be filed, and any tax due must be paid, by the filing deadline generally applicable to such person. (The return may be filed by such later date as is provided in an extension granted by the Internal Revenue Service.) Any tax withheld under section 1445(a) shall be credited against the amount of income tax as computed in such return.

(2) *Manner of obtaining credit or refund.* A stamped copy of Form 8288–A will be provided to the transferor by the Service (under paragraph (c) of this section) if the Form 8288–A is complete, including the transferor's identifying number. Except as provided in paragraph (f)(3) of this section, a stamped copy of Form 8288–A must be attached to the transferor's return to establish the amount withheld that is available as a credit. If the amount withheld under section 1445(a) constitutes less than the full amount of the transferor's U.S. tax liability for that taxable year, then a payment of estimated tax may be required to be made pursuant to section 6154 or 6654 prior to the filing of the income tax return for that year. Alternatively, if the amount withheld under section 1445(a) exceeds the transferor's maximum tax liability with respect to the disposition (as determined by the IRS), then the transferor may seek an early refund of the excess pursuant to § 1.1445–3(g), or a normal refund upon the filing of a tax return.

(3) *Special rules*—(i) *Failure to receive Form 8288–A.* If a stamped copy of Form 8288–A has not been provided to the transferor by the Service, the transferor may establish the amount of tax withheld by the transferee by attaching to its return substantial evidence (*e.g.,* closing documents) of such amount. Such a transferor must attach to its return a statement which supplies all of the information required by § 1.1445–1(d), including the transferor's identifying number.

(ii) *U.S. persons subjected to withholding.* If a transferee withholds tax

under section 1445(a) with respect to a person who is not a foreign person, such person may credit the amount of any tax withheld against his income tax liability in accordance with the provisions of this §1.1145–1(f) or apply for an early refund under §1.1445–3(g).

(iii) *Refund in case of installment sale.* A transferor that takes gain into account in accordance with the provisions of section 453 shall not be entitled to a refund of the amount withheld, unless a withholding certificate providing for such a refund is obtained from the Internal Revenue Service pursuant to the provisions of §1.1445–3.

(iv) *Joint foreign transferors.* If two or more foreign persons jointly transfer a U.S. real property interest, each transferor shall be credited with such portion of the amount withheld as such transferors mutually agree. Such transferors must request that the transferee reflect the agreed-upon crediting of the amount withheld on the Forms 8288–A filed by the transferee. If the foreign transferors fail to request that the transferee reflect the agreed-upon crediting of the amount withheld by the 10th day after the date of transfer, the transferee must credit the amount withheld equally between (or among) the foreign transferors. In such case, the transferee is indemnified pursuant to section 1461 against any claim by a transferor objecting to the resulting division of credits. For rules regarding the amount realized allocated to joint foreign and non-foreign transferors, see §1.1445–1(b)(2).

(g) *Definitions*—(1) *In general.* Unless otherwise specified, the definitions of terms provided in §1.897–1 shall apply for purposes of this section and §§1.1445–2 through 1.1445–7. For purposes of section 1445 and the regulations thereunder, definitions of other relevant terms are provided in this paragraph (g). In addition, the term ''residence'' is defined in 1.1445–2(d)(1), the terms ''transferor's agent'' and ''transferee's agent'' are defined in 1.1445–4(f), and the term ''relevant taxpayer'' is defined in 1.1445–6(a)(2).

(2) *Transfer.* The term ''transfer'' means any transaction that would constitute a disposition for any purpose, of the Internal Revenue Code and regulations thereunder. For purposes of §§1.1445–5 and 1.1445–6, the term includes distribution to shareholders of a corporation, partners of a partnership and beneficiaries of a trust or estate.

(3) *Transferor.* The term ''transferor'' means any person, foreign or domestic, that disposes of a U.S. real property interest by sale, exchange, gift, or any other transfer. The term ''U.S. real property interest'' is defined in §1.897–1(c).

(4) *Transferee.* The term ''transferee'' means any person, foreign or domestic, that acquires a U.S. real property interest by purchase, exchange, gift, or any other transfer.

(5) *Amount realized.* The amount realized by the transferor for the transfer of a U.S. real property interest is the sum of.

(i) The cash paid, or to be paid.

(ii) The fair market value of other property transferred, or to be transferred, and

(iii) The outstanding amount of any liability assumed by the transferee or to which the U.S. real property interest is subject immediately before and after the transfer.

The term ''cash paid or to be paid'' does not include stated or unstated interest or original issue discount (as determined under the rules of sections 1271 through 1275).

(6) *Contract price.* The contract price of a U.S. real property interest is the sum that is agreed to by the transferee and transferor as the total amount of consideration to be paid for the property. That amount will generally be equal to the amount realized by the transferor, as defined in paragraph (b)(5) of this section.

(7) *Fair market value.* The fair market value of property means the price at which the property would change hands between an unrelated willing buyer and willing seller, neither being under any compulsion to buy or to sell and both having reasonable knowledge of all relevant facts.

(8) *Date of transfer.* The date of transfer of a U.S. real property interest is the first date on which consideration is paid (or a liability assumed) by the transferee. However, for purposes of section 1445(e) (2), (3), and (4) and §§1.1445–5(c)(1)(iii) and 1.1445–5(c)(3) only, the date of transfer is the date of

the distribution that gives rise to the obligation to withhold. For purposes of this paragraph (g)(8), the payment of consideration does not include the payment, prior to the passage of legal or equitable title (other than pursuant to an initial contract for purchase), of earnest money, a good-faith deposit, or any similar sum that is primarily intended to bind the transferee or transferor to the entering or performance of a contract. Such a payment will not constitute a payment of consideration solely because it may ultimately be applied against the amount owed to the transferor by the transferee. Such a payment is presumed to be earnest money, a good faith deposit, or a similar sum if it is subject to forfeiture in the event of a failure to enter into a contract or a breach of contract. However, a payment that is not forefeitable may nevertheless be found to constitute earnest money, a good faith deposit, or a similar sum.

(9) *Identifying number.* Pursuant to § 1.897–1(p), an individual's identifying number is the social security number or the identification number assigned by the Internal Revenue Service (see § 301.6109–1 of this chapter). The identifying number of any other person is its United States employer identification number.

(10) *Address of the Director, Philadelphia Service Center.* Any written communication directed to the Director, Philadelphia Service Center is to be addressed as follows: P.O. Box 21086, Drop Point 8731, FIRPTA Unit, Philadelphia, PA 19114–0586.

(h) *Effective date for taxpayer identification numbers.* The requirement in paragraphs (c)(2)(i)(B), (d)(1)(i) and (ii), (d)(2)(i), (d)(2)(iv)(B), and (d)(2)(vi)(B) of this section that taxpayer identification numbers be provided (in all cases) is applicable for dispositions of U.S. real property interests occurring after November 3, 2003.

[T.D. 8113, 51 FR 46629, Dec. 24, 1986; 52 FR 3796, 3916, Feb. 6, 1987, as amended by T.D. 8647, 60 FR 66076, Dec. 21, 1995; T.D. 9082, 68 FR 46084, August 5, 2003]

§ 1.1445–2 Situations in which withholding is not required under section 1445(a).

(a) *Purpose and scope of section.* This section provides rules concerning various situations in which withhold is not required under section 1445(a). In general, a transferee has a duty to withhold under section 1445(a) only if both of the following are true:

(1) The transferor is a foreign person; and

(2) The transferee is acquiring a U.S. real property interest.

Thus, paragraphs (b) and (c) of this section provide rules under which a transferee of property can ascertain that he has no duty to withhold because one or the other of the two key elements is missing. Under paragraph (b), a transferee may determine that no withholding is required because the transferor is not a foreign person. Under paragraph (c), a transferee may determine that no withholding is required because the property acquired is not a U.S. real property interest. Finally, paragraph (d) of this section provides rules concerning exceptions to the withholding requirement.

(b) *Transferor not a foreign person*—(1) *In general.* No withholding is required under section 1445 if the transferor of a U.S. real property interest is not a foreign person. Therefore, paragraph (b)(2) of this section provides rules pursuant to which the transferor can provide a certification of non-foreign status to inform the transferee that withholding is not required. A transferee that obtains such a certification must retain that document for five years, as provided in paragraph (b)(3) of this section. Except to the extent provided in paragraph (b)(4) of this section, the obtaining of this certification excuses the transferee from any liability otherwise imposed by section 1445 and § 1.1445–1(e). However, section 1445 and the rules of this section do not impose any obligation upon a transferee to obtain a certification from the transferor, thus, a transferee may instead rely upon other means to ascertain the non-foreign status of the transferor. If, however, the transferee relies upon other means and the transferor was, in

fact, a foreign person, then the transferee is subject to the liability imposed by section 1445 and § 1.1445–1(e).

A transferee is in no event required to rely upon other means to ascertain the non-foreign status of the transferor and may demand a certification of non-foreign status. If the certification is not provided, the transferee may withhold tax under section 1445 and will be considered, for purposes of sections 1461 through 1463, to have been required to withhold such tax.

(2) *Transferor's certification of non-foreign status*—(i) *In general.* A transferee of a U.S. real property interest is not required to withhold under section 1445(a) if, prior to or at the time of the transfer, the transferor furnishes to the transferee a certification that—

(A) States that the transferor is not a foreign person.

(B) Sets forth the transferor's name, identifying number and home address (in the case of an individual) or office address (in the case of an entity), and

(C) Is signed under penalties of perjury.

In general, a foreign person is a nonresident alien individual, foreign corporation, foreign partnership, foreign trust, or foreign estate, but not a resident alien individual. In this regard, see § 1.897–1(k). However, a foreign corporation that has made a valid election under section 897(i) is generally not treated as a foreign person for purposes of section 1445. In this regard, see § 1.1445–7. Pursuant to § 1.897–1(p), an individual's identifying number is the individual's Social Security number and any other person's identifying number is its U.S. employer identification number. A certification pursuant to this paragraph (b) must be vertified as true and signed under penalties of perjury by a responsible officer in the case of a corporation, by a general partner in the case of a partnership, and by a trustee, executor, or equivalent fiduciary in the case of a trust or estate. No particular form is needed for a certification pursuant to this paragraph (b), nor is any particular language required, so long as the document meets the requirements of this paragraph (b)(2)(i). Samples of acceptable certifications are provided in paragraph(b)(2)(iii) of this section.

(ii) *Foreign corporation that ''has made election under section 897(i).* A foreign corporation that has made a valid election under section 897(i) to be treated as a domestic corporation for purposes of section 897 may provide a certification of non-foreign status pursuant to this paragraph (b)(2). However, an electing foreign corporation must attach to such certification a copy of the acknowledgment of the election provided to the corporation by the Internal Revenue Service pursuant to § 1.897–3(d)(4).

An acknowledgment is valid for this purpose only if it states that the information required by § 1.897–3 has been determined to be complete.

(iii) *Disregarded entities.* A disregarded entity may not certify that it is the transferor of a U.S. real property interest, as the disregarded entity is not the transferor for U.S. tax purposes, including sections 897 and 1445. Rather, the owner of the disregarded entity is treated as the transferor of property and must provide a certificate of non-foreign status to avoid withholding under section 1445. A disregarded entity for these purposes means an entity that is disregarded as an entity separate from its owner under § 301.7701–3 of this chapter, a qualified REIT subsidiary as defined in section 856(i), or a qualified subchapter S subsidiary under section 1361(b)(3)(B). Any domestic entity must include in its certification of non-foreign status with respect to the transfer a certification that it is not a disregarded entity. This paragraph (b)(2)(iii) and the sample certification provided in paragraph (b)(2)(iv)(B) of this section (to the extent it addresses disregarded entities) is applicable for dispositions occurring September 4, 2003.

(iv) *Sample certifications*—(A) *Individual transferor.*

''Section 1445 of the Internal Revenue Code provides that a transferee (buyer) of a U.S. real property interest must withhold tax if the transferor (seller) is a foreign person. To inform the transferee (buyer) that withholding of tax is not required upon my disposition of a U.S. real property interest, I, [*name of transferor*], hereby certify the following:

1. I am not a nonresident alien for purposes of U.S. income taxation;

2. My U.S. taxpayer identifying number [Social Security number] is _____; and

3. My home address is:

_____

_____

I understand that this certification may be disclosed to the Internal Revenue Service by the transferee and that any false statement I have made here could be punished by fine, imprisonment, or both.

Under penalties of perjury I declare that I have examined this certification and to the best of my knowledge and belief it is true, correct, and complete. [Signature and Date]''

(B) *Entity transferor.*

''Section 1445 of the Internal Revenue Code provides that a transferee of a U.S. real property interest must withhold tax if the transferor is a foreign person. For U.S. tax purposes (including section 1445), the owner of a disregarded entity (which has legal title to a U.S. real property interest under local law) will be the transferor of the property and not the disregarded entity. To inform the transferee that withholding of tax is not required upon the disposition of a U.S. real property interest by [name of transferor] , the undersigned hereby certifies the following on behalf of [name of the transferor]:

1. [Name of transferor] is not a foreign corporation, foreign partnership, foreign trust, or foreign estate (as those terms are defined in the Internal Revenue Code and Income Tax Regulations);

2. [Name of transferor] is not a disregarded entity as defined in § 1.1445–2(b)(2)(iii);

3. [Name of transferor]'s U.S. employer identification number is _____; and

4. [Name of transferor]'s office address is _____.

[Name of transferor] understands that this certification may be disclosed to the Internal Revenue Service by transferee and that any false statement contained herein could be punished by fine, imprisonment, or both.

Under penalties of perjury I declare that I have examined this certification and to the best of my knowledge and belief it is true, correct, and complete, and I further declare that I have authority to sign this document on behalf of [name of transferor].

[Signature(s) and date]

[Title(s)]''

(3) *Transferee must retain certification.* If a transferee obtains a transferor's certification pursuant to the rules of this paragraph (b), then the transferee must retain that certification until the end of the fifth taxable year following the taxable year in which the transfer takes place. The transferee must retain the certification, and make it avaliable to the Internal Revenue Service when requested in accordance with the requirements of section 6001 and regulations thereunder.

(4) *Reliance upon certification not permitted*—(i) *In general.* A transferee may not rely upon a transferor's certification pursuant to this paragraph (b) under the circumstances set forth in either subdivision (ii) or (iii) of this paragraph (b)(4). In either of those circumstances, a transferee's withholding obligation shall apply as if a certification had never been obtained, and the transferee is fully liable pursuant to section 1445 and § 1.1445–1(e) for any failure to withhold.

(ii) *Failure to attach IRS acknowledgment of election.* A transferee that knows that the transferor is a foreign corporation may not rely upon a certification of non-foreign status provided by the corporation on the basis of election under section 897(i), unless there is attached to the certification a copy of the acknowledgment by the Internal Revenue Service of the corporation's election, as required by paragraph (b)(2)(ii) of this section.

(iii) *Knowledge of falsity.* A transferee is not entitled to rely upon a transferor's certification if prior to or at the time of the transfer the transferee either—

(A) Has actual knowledge that the transferor's certification is false; or

(B) Receives a notice that the certification is false from a transferor's or transferee's agent, pursuant to § 1.1445–4.

(iv) *Belated notice of false certification.* If after the date of the transfer a transferee receives a notice that a certification is false, then that transferee is entitled to rely upon the certification only with respect to consideration that was paid prior to receipt for the notice. Such a transferee is required to withhold a full 10 percent of the amount realized from the consideration that remains to be paid to the transferor if possible. Thus, if 10 percent or more of the amount reailzed remains to be paid to the transferor then the transferee is required to withhold and pay over the full 10 percent. The transferee must do so by withholding and paying over the entire amount of each successive payment of consideration to the transferor until the full 10 percent of the amount

realized has been withheld and paid over. Amounts so withheld must be reported and paid over by the 20th day following the date on which each such payment of consideration is made. A transferee that is subject to the rules of this paragraph (b)(4)(iv) may not obtain a withholding certificate pursuant to § 1.1445–3, but must instead withhold and pay over the amounts required by this paragraph.

(c) *Transferred property not a U.S. real property interest*—(1) *In general.* No withholding is required under section 1445 if the transferee acquires only property that is not a U.S. real property interest. As defined in section 897(c) and § 1.897–1(c), a U.S. real property interest includes certain interests in U.S. corporations, as well as direct interests in real property and certain associated personal property. This paragraph (c) provides rules pursuant to which a person acquiring an interest in a U.S. corporation may determine that withholding is not required because that interest is not a U.S. real property interest. To determine whether an interest in tangible property constitutes a U.S. real property interest the acquisition of which would be subject to withholding, see § 1.897–1 (b) and (c).

(2) *Interests in publicly traded entities.* No withholding is required under section 1445(a) upon the acquisition of an interest in a domestic corporation if any class of stock of the corporation is regularly traded on an established securities market.

This exemption shall apply if the disposition is incident to an initial public offering of stock pursuant to a registration statement filed with the Securities and Exchange Commission. Similarly, no withholding is required under section 1445(a) upon the acquisition of an interest in a publicly traded partnership or trust. However, the rule of this paragraph (c)(2) shall not apply to the acquisition, from a single transferor in a single (or related transferors (as defined in § 1.897–1(i)) transaction (or related transactions), of an interest described in § 1.897–1(c)(2)(iii)(B) (relating to substantial amounts of non-publicly traded interests in publicly traded corporations) or to similar interests in publicly traded partnerships or trusts. The person making an acquisition described in the preceding sentence must otherwise determine whether withholding is required, pursuant to section 1445 and the regulations thereunder. Transactions shall be deemed to be related if they are undertaken within 90 days of one another or if it can otherwise be shown that they were undertaken in pursuance of a prearranged plan.

(3) *Transferee receives statement that interest in corporation is not a U.S. real property interest*—(i) *In general.* No withholding is required under section 1445(a) upon the acquisition of an interest in a domestic corporation, if the tranferor provides the transferee with a copy of a statement, issued by the corporation pursuant to § 1.897–2(h), certifying that the interest is not a U.S. real property interest. In general, a corporation may issue such a statement only if the corporation was not a U.S. real property holding corporation at any time during the previous five years (or the period in which the interest was held by its present holder, if shorter) or if interests in the corporation ceased to be United States real property interests under section 897(c)(1)(B). (A corporation may not provide such a statement based on its determination that the interest in question is an interest solely as a creditor). See § 1.897–2 (f) and (h). The corporation may provide such a statement directly to the transferee at the transferor's request. The transferor must request such a statement prior to the transfer, and shall, to the extent possible, specify the anticipated date of the transfer. A corporation's statement may be relied upon for purposes of this paragraph (c)(3) only if the statement is dated not more than 30 days prior to the date of the transfer. A transferee may also rely upon a corporation's statement that is voluntarily provided by the corporation in response to a request from the transferee, if that statement otherwise complies with the requirements of this paragraph (c)(3) and § 1.897–2(h).

(ii) *Reliance on statement not permitted.* A transferee is not entitled to rely upon a statement that a corporation is not a U.S. real property holding

corporation if, prior to or at the time of the transfer, the transferee either—

(A) Has actual knowledge that the statement is false, or

(B) Receives a notice that the statement is false from a transferor's or transferee's agent, pursuant to § 1.1445–4.

Such a transferee's withholding obligations shall apply as if a statement had never been given, and such a transferee may be held fully liable pursuant to § 1.1445–1(e) for any failure to withhold.

(iii) *Belated notice of false statement.* If after the date of the transfer, a transferee receives notice that a statement provided under § 1.1445–2(c)(3)(i) (that an interest in a corporation is not a U.S. real property interest) is false, then such transferee may rely on the statement only with respect to consideration that was paid prior to the receipt of the notice.

Such a transferee is required to withhold a full 10 percent of the amount realized from the consideration that remains to be paid to the transferor, if possible. Thus, if 10 percent or more of the amount realized remains to be paid to the transferor, then the transferee is required to withhold and pay over the full 10 percent. The transferee must do so by withholding and paying over the entire amount of each successive payment of consideration to the transferor, until the full 10 percent of the amount realized has been withheld and paid over. Amounts so withheld must be reported and paid over by the 20th day following the date on which each such payment of consideration is made. A transferee that is subject to the rules of this § 1.1445–2(c)(3)(iii) may not obtain a withholding certificate pursuant to § 1.1445–3, but must instead withhold and pay over the amounts required by this paragraph.

(d) *Exceptions to requirement of withholding*—(1) *Purchase of residence for $300,000 or less.* No withholding is required under section 1445(a) if one or more individual transferees acquire a U.S. real property interest for use as a residence and the amount realized on the transaction is $300,000 or less. For purposes of this section, a U.S. real property interest is acquired for use as a residence if on the date of the transfer the transferee (or transferees) has definite plans to reside at the property for at least 50 percent of the number of days that the property is used by any person during each of the first two 12-month periods following the date of the transfer. The number of days that the property will be vacant is not taken into account in determining the number of days such property is used by any person. A transferee shall be considered to reside at a property on any day on which a member of the transferee's family, as defined in section 267(c)(4), resides at the property. No form or other document need be filed with the Internal Revenue Service to establish a transferee's entitlement to rely upon the exception provided by this paragraph (d)(1). A transferee who fails to withhold in reliance upon this exception, but who does not in fact reside at the property for the minimum number of days set forth above, shall be liable for the failure to withhold (if the transferor was a foreign person and did not pay the full U.S. tax due on any gain recognized upon the transfer). However, if the transferee establishes that the failure to reside the minimum number of days was caused by a change in circumstances that could not reasonably have been anticipated at the time of the transfer, then the transferee shall not be liable for the failure to withhold.

The exception provided by paragraph (d)(1) does not apply in any case where the transferee is other than an individual even if the property is acquired for or on behalf of an individual who will use the property as a residence. However, this exception applies regardless of the organizational structure of the transferor (i.e., regardless of whether the transferor is an individual, partnership, trust, corporation, etc.).

(2) *Coordination with nonrecognition provisions*—(i) *In general.* A transferee shall not be required to withhold under section 1445(a) with respect to the transfer of a U.S. real property interest if—

(A) The transferor notifies the transferee, in the manner described in paragraph (d)(2)(iii) of this section, that by reason of the operation of a nonrecognition provision of the Internal Revenue Code or the provisions of any United States treaty the transferor is

not required to recognize any gain or loss with respect to the transfer, and

(B) By the 20th day after the date of the transfer the transferee provides a copy of the transferor's notice to the Director, Philadelphia Service Center, at the address provided in § 1.1445–1(g)(10), together with a cover letter setting forth the name, identifying number, and home address (in the case of an individual) or office address (in the case of an entity) of the transferee providing the notice to the Service. The rule of this paragraph (d)(2)(i) is subject to the exceptions set forth in paragraph (d)(2)(ii). For purposes of this paragraph (d)(2) a nonrecognition provision is any provision of the Internal Revenue Code for not recognizing gain or loss.

(ii) *Exceptions.* A transferee may not rely upon the rule of paragraph (d)(2)(i) of this section, and must therefore withhold under section 1445(a) with respect to the transfer of a U.S. real property interest, if either:

(A) The transferor qualifies for nonrecognition treatment with respect to part, but not all, of the gain realized by the transferor upon the transfer, or

(B) The transferee knows or has reason to know that the transferor is not entitled to the nonrecognition treatment claimed by the transferor.

In either of the above circumstances the transferee or transferor may request a withholding certificate from the Internal Revenue Service pursuant to the rules of § 1.1445–3.

(iii) *Contents of the notice.* No particular form is required for a transferor's notice to a transferee that the transferor is not required to recognize gain or loss with respect to a transfer. The notice must be verified as true and signed under penalties of perjury by the transferor, by a responsible officer in the case of a corporation, by a general partner in the case of a partnership, and by a trustee or equivalent fiduciary in the case of a trust or estate. The following information must be set forth in paragraphs labeled to correspond with the designation set forth as follows—

(A) A statement that the document submitted constitutes a notice of a nonrecognition transaction or a treaty provision pursuant to the requirements of § 1.1445–2(d)(2);

(B) The name, identifying number, and home address (in the case of an individual) or office address (in the case of an entity) of the transferor submitting the notice;

(C) A statement that the transferor is not required to recognize any gain or loss with respect to the transfer;

(D) A brief description of the transfer; and

(E) A brief summary of the law and facts supporting the claim that recognition of gain or loss is not required with respect to the transfer.

(iv) *No notice allowed.* The provisions of this paragraph (d)(2) do not apply to exclusions from income under section 121, to simultaneous like-kind exchanges under section 1031 that do not qualify for nonrecognition treatment in their entirety (see paragraph (d)(2)(ii)(A) of this section), and to nonsimultaneous like-kind exchanges under section 1031 where the transferee cannot determine that the exchange has been completed and all the conditions for nonrecognition have been satisfied at the time it is otherwise required to pay the section 1445 withholding tax and file the withholding tax return (Form 8288, ''U.S. Withholding Tax Return for Dispositions by Foreign Persons of U.S. Real Property Interests''). In these cases, the transferee is excused from withholding only upon the timely application for and receipt of a withholding certificate under § 1.1445–3 (see § 1.1445–3(b)(5) and (6) for specific rules applicable to transactions under sections 121 and 1031). This paragraph (d)(2)(iv) is applicable for dispositions and exchanges occurring September 4, 2003.

(3) *Special procedural rules applicable to foreclosures*—(i) *Amount to be withheld*—(A) *foreclosures.* A transferee that acquires a U.S. real property interest pursuant to a repossession or foreclosure on such property under a mortgage, security agreement, deed of trust or other instrument securing a debt must withhold tax under section 1445(a) equal to 10 percent of the amount realized on such sale. Such amount must be reported and paid over to the Service under the general rules of § 1.1445–1. However, if the transferee complies

with the notice requirements of § 1.1445–2(d)(3) (ii) and (iii), such transferee may report and pay over to the Service on or before the 20th day following the final determination by a court or trustee with jurisdiction over the foreclosure action, the lesser of:

(*1*) The amount otherwise required to be withheld under section 1445(a), or

(*2*) The ''alternative amount'' as defined in the succeeding sentence. The alternative amount is the entire amount, if any, determined by a court or trustee with jurisdiction over the matter, that accrues to the debtor/transferor out of the amount realized from the foreclosure sale. The amount of any mortgage, lien, or other security agreement secured by the property, that is terminated, assumed by another person, or otherwise extinguished (as to the debtor/transferor) shall not be treated as an amount that accrues to the debtor/transferor for purposes of this § 1.1445–2(d)(3)(i)(A). If the alternative amount is zero, no withholding is required. Any difference between the amount withheld at the time of the foreclosure sale and the amount to be reported and paid over to the Service must be transferred to the court or trustee with jurisdiction over the foreclosure action. Amounts withheld, if any, are to be reported and paid to the Service by using Forms 8288 and 8288–A in conformity with § 1.1445–1(d).

(B) *Deeds in lieu of foreclosures.* A transferee of a U.S. real property interest pursuant to a deed in lieu of foreclosure must withhold tax equal to 10 percent of the amount realized by the debtor/transferor on the transfer. However, no withholding is required if:

(*1*) The transferee is the only person with a security interest in the property,

(*2*) No cash or other property (other than incidental fees incurred with respect to the transfer) is paid, directly or indirectly, to any person with respect to the transfer, and

(*3*) The notice requirement of § 1.1445–2(d)(3) are satisfied.

The amount withheld, if any, must be reported and paid over to the Service not later than the 20th day following the date of transfer. In a case where withholding would otherwise be required, a withholding certificate may be requested in accordance with § 1.1445–3.

(ii) *Notice to the court or trustee in a foreclosure action*—(A) *Notice on day of purchase.* A transferee in a foreclosure sale that chooses to use the special rules applicable to foreclosures must provide notice to the court or trustee with jurisdiction over the foreclosure action on the day the property is transferred with respect to such transferee's withholding obligation. No particular form is necessary but the notice must set forth the transferee's name, home address in the case of an individual, office address in the case of an entity, a brief description of the property, the date of the transfer, the amount realized on the sale of the foreclosed property and the amount withheld under section 1445(a).

(B) *Notice whether amount withheld or alternative amount is reported and paid over to the Service.* A purchaser/transferee in a foreclosure that chooses to use the special rules applicable to foreclosures must provide notice to the court or trustee with jurisdiction over the foreclosure action regarding whether the amount withheld or the alternative amount will be (or has been) reported and paid over to the Service. The notice should set forth all the information required by the preceding paragraph (d)(3)(ii)(A), the amount withheld or alternative amount that will be (or has been) reported and paid over to the Service, and the amount that will be (or has been) paid over to the court or trustee.

(iii) *Notice to the Service*—(A) *General rule.* A transferee that in reliance upon the rules of this paragraph (d)(3) withholds an alternative amount (or does not withhold because the alternative amount is zero) must, on or before the 20th day following the final determination by a court or trustee in a foreclosure action or on or before the 20th day following the date of the transfer with respect to a transfer pursuant to a deed in lieu of foreclosure, provide notice thereof to the Assistant Commissioner (International) at the address provided in § 1.1445–1(g)(10). (The filing of such a notice shall not relieve a creditor of any obligation it may have to file a notice pursuant to section 6050J and the regulations thereunder.)

No particular form is required but the following information must be set forth in paragraphs labelled to correspond with the numbers set forth below.

(*1*) A statement that the notice constitutes a notice of foreclosure action or transfer pursuant to a deed in lieu of foreclosure under § 1.1445–2(d)(3).

(*2*) The name, identifying number, and home address (in the case of an individual) or office address (in the case of an entity) of the purchaser/transferee.

(*3*) The name, identifying number, and home address (in the case of an individual) or office address (in the case of an entity) of the debor/transferor.

(*4*) In a foreclosure action, the date of the final determination by a court or trustee regarding the distribution of the amount realized from the foreclosure sale. In a transfer pursuant to a deed in lieu of foreclosure, the date the property is transferred to the purchaser/transferee.

(*5*) A brief description of the property.

(*6*) The amount realized from the foreclosure sale or with respect to the transfer pursuant to a deed in lieu of foreclosure.

(*7*) The alternative amount.

(B) *Special rule for lenders required to file Form 1099–A where the alternative amount is zero.* A person required under section 6050J to file Form 1099–A does not have to comply with the notice requirement of § 1.1445–2(d)(3)(iii)(A) if the alternative amount is zero. In such case, the filing of the Form 1099–A will be deemed to satisfy the notice requirments of § 1.1445–2(d)(3)(iii)(A).

(iv) *Requirements not applicable.* A transferee is not required to withhold tax or provide notice pursuant to the rules of this paragraph (d)(3) if no substantive withholding liability applies to the transfer of the property by the debtor/transferor. For example, if the debtor/transferor provides the transferee with a certification of non-foreign status pursuant to paragraph (b) of this section, then no substantive withholding liability would exist with respect to the acquisition of the property from the debtor transferor. In such a case, no withholding of tax or notice to the Internal Revenue Service is required of the transferee with respect to the repossession or foreclosure.

(v) *Anti-abuse rule.* If a U.S. real property interest is transferred in foreclosure or pursuant to a deed in lieu of foreclosure for a principal purpose of avoiding the requirements of section 1445(a), then the provisions of this paragraph (d)(3) shall not apply to the transfer and the transferee shall be fully liable for any failure to withhold with respect to the transfer. A principal purpose to avoid section 1445(a) will be presumed (subject to rebuttal on the basis of all relevant facts and circumstances) if:

(A) The transferee acquires property in which it, or a related party, has a security interest;

(B) The security interest did not arise in connection with the debtor/transferor's or a related party's or predecessor in interest's acquisition, improvement, or maintenance of the property; and

(C) The total amount of all debts secured by the property exceeds 90 percent of the fair market value of the property.

(4) *Installment payments.* A transferee of a U.S. real property interest is not required to withhold under section 1445 when making installment payments on an obligation arising out of a dispositions that took place before January 1, 1985. With respect to disposition that take place after December 31, 1984, the transferee shall be required to satisfy its entire withholding obligation within the time specified in § 1.1445–1(c) regardless of the amount actually paid by the transferee. Thereafter, no withholding is required upon further installment payments on an obligation arising out of the transfer. A transferee that is unable to satisfy its entire withholding obligation within the time specified in § 1.1445–1(c) may request a withholding certificate pursuant to § 1.1445–3.

(5) *Acquisitions by governmental bodies.* No withholding of tax is required under section 1445 with respect to any acquisition of property by the United States, a state or possession of the United States, a political subdivision thereof, or the District of Columbia.

(6) [Reserved]

(7) *Withholding certificate obtained by transferee or transferor.* No withholding is required under section 1445(a) if the transferee is provided with a withholding cerfiticate that so specifies. Either the transferor or the transferee may seek a withholding certificate from the Internal Revenue Service, pursuant to the provisions of § 1.1445–3.

(8) *Amount realized by transferor is zero.* If the amount realized by transferor on a transfer of a U.S. real property interest is zero, no withholding is required.

(e) *Effective date for taxpayer identification numbers.* The requirement in paragraphs (d)(2)(i)(B), (d)(2)(iii)(B), and (d)(3)(iii)(A)(*2*) and (*3*) of this section that taxpayer identification numbers be provided (in all cases) is applicable for dispositions of U.S. real property interests occurring after November 3, 2003.

[T.D. 8113, 51 FR 46633, Dec. 24, 1986; 52 FR 3917, Feb. 6, 1987; as amended at T.D. 8198, 53 FR 16230, May 5, 1988; T.D. 9082, 68 FR 46084, Aug. 5, 2003]

§ 1.1445–3 Adjustments to amount required to be withheld pursuant to withholding certificate.

(a) *In general.* Withholding under section 1445(a) may be reduced or eliminated pursuant to a withholding certificate issued by the Internal Revenue Service in accordance with the rules of this section. A withholding certificate may be issued by the Service in cases where reduced withholding is appropriate (see paragraph (c) of this section), where the transferor is exempt from U.S. tax (see paragraph (d) of this section), or where an agreement for the payment of tax is entered into with the Service (see paragraph (e) of this section). A withholding certificate that is obtained prior to a transfer notifies the transferee that no withholding is required. A withholding certificate that is obtained after a transfer has been made may authorize a normal refund or an early refund pursuant to paragraph (g) of this section. Either a transferee or transferor may apply for a withholding certificate. The Internal Revenue Service will act upon an application for a withholding certificate not later than the 90th day after it is received. Solely for this purpose (i.e., determining the day upon which the 90-day period commences), an application is received by the Service on the date that all information necessary for the Service to make a determination is provided by the applicant. In no event, however, will a withholding certificate be issued without the transferor's identifying number. (For rules regarding whether an application for a withholding certificate has been timely submitted, see § 1.445–1(c)(2).) The Service may deny a request for a withholding certificate where, after due notice, an applicant fails to provide information necessary for the Service to make a determination. The Service will act upon an application for an early refund not later than the 90th day after it is received. An application for an early refund must either (1) include a copy of a withholding certificate issued by the Service with respect to the transaction or, (2) be combined with an application for a withholding certificate. Where an application for an early refund is combined with an application for a withholding certificate, the Service will act upon both applications not later than the 90th day after receipt. In the case of an application for a certificate based on non-conforming secuirty under paragraph (e)(3)(v) of this section, and in unusually complicated cases, the Service may be unable to provide a final withholding certificate by the 90th day. In such a case the Service will notify the applicant, by the 45th day after receipt of the application, that additional processing time will be necessary. The Service's notice may request additional information or explanation concerning particular aspects of the application, and will provide a target date for final action (contingent upon the application's timely submission of any requested information). A withholding certificate issued pursuant to the provisions of this section serves to fulfill the requirements of section 1445(b)(4) concerning qualifying statements, section 1445(c)(1) concerning the transferor's maximum tax liability, or section 1445(c)(2) concerning the Secretary's authority to prescribe reduced withholding.

(b) *Applications for withholding certificates*—(1) *In general.* An application for

a withholding certificate must be submitted to the Director, Philadelphia Service Center, at the address provided in § 1.1445–1(g)(10). An application for a withholding certificate must be signed by a responsible officer in the case of a corporation, by a general partner in the case of a partnership, by a trustee, executor, or equivalent fiduciary in the case of a trust or estate, and in the case of an individual by the individual himself. A duly authorized agent may sign the application but the application must contain a valid power of attorney authorizing the agent to sign the application on behalf of the applicant. The person signing the application must verify under penalties of perjury that all representations made in connection with the application are true, correct, and complete to his knowledge and belief. No particular form is required for an application, but the application must set forth the information described in paragraphs (b), (2), (3), and (4), and to the extent applicable, paragraph (b)(5) or (6) of this section.

(2) *Parties to the transaction.* The application must set forth the name, address, and identifying number of the person submitting the application (specifying whether that person is the transferee or transferor), and the name, address, and identifying number of other parties to the transaction (specifying whether each such party is a transferee or transferor). The Service will deny the application if complete information, including the identifying numbers of all the parties, is not provided. Thus, for example, the applicant should determine if an identifying number exists for each party, and, if none exists for a particular party, the applicant should notify the particular party of the obligation to get an identifying number before the application can be submitted to the Service. The address provided in the case of an individual must be that individual's home address, and the address provided in the case of an entity must be that entity's office address. A mailing address may be provided in addition to, but not in lieu of, a home address or office address.

(3) *Real property interest to be transferred.* The application must set forth information concerning the U.S. real property interest with respect to which the withholding certificate is sought, including the type of interest, the contract price, and, in the case of an interest in real property, its location and general description, or in the case of an interest in a U.S. real property holding corporation, the class or type and amount of the interest.

(4) *Basis for certificate*—(i) *Reduced withholding.* If a withholding certificate is sought on the basis of a claim that reduced withholding in appropriate, the application must include:

(A) A calculation of the maximum tax that may be imposed on the disposition in accordance with paragraph (c)(2) of this section. Such calculation must be accompanied by a copy of the relevant contract and depreciation schedules or other evidence that confirms the contract price and adjusted basis of the property. If no depreciation schedules are provided, the application must state the nature of the use of the property and why depreciation was not allowable. Evidence that supports any claimed adjustment to the maximum tax on the disposition must also be provided;

(B) A calculation of the transferor's unsatisfied withholding liability, or evidence supporting the claim that no such liability exists, in accordance with paragraph (c)(3) of this section; and

(C) In the case of a request for a special reduction of withholding pursuant to paragraph (c)(4) of this section, a statement of law and facts in support of the request.

(ii) *Exemption.* If a withholding certificate is sought on the basis of the transferor's exemption from U.S. tax, the application must set forth a brief statement of the law and facts that support the claimed exemption. In this regard, see paragraph (d) of this section.

(iii) *Agreement.* If a withholding certificate is sought on the basis of an agreement for the payment of tax, the application must include a signed copy of the agreement proposed by the applicant and a copy of the security instrument (if any) proposed by the applicant. In this regard, see paragraph (e) of this section.

(5) *Special rule for exclusions from income under section 121.* A withholding certificate may be sought on the basis of a section 121 exclusion as a reduction in the amount of tax due under paragraph (c)(2)(v) of this section. The application must include information establishing that the transferor, who is a nonresident alien individual at the time of the sale (and is therefore subject to sections 897 and 1445) is entitled to claim the benefits of section 121. For example, a claim for reduced withholding as a result of section 121 must include information that the transferor occupied the U.S. real property interest as his or her personal residence for the required period of time.

(6) *Special rule for like-kind exchanges under Section 1031.* A withholding certificate may be requested with respect to a like-kind exchange under section 1031 as a transaction subject to a nonrecognition provision under paragraph (c)(2)(ii) of this section. The application must include information substantiating the requirements of section 1031. The IRS may require additional information during the course of the application process to determine that the requirements of section 1031 are satisfied. In the case of a deferred like-kind exchange, the withholding agent is excused from reporting and paying the withholding tax to the IRS within 20 days after the transfer only if an application for a withholding certificate is submitted prior to or on the date of transfer. See §1.1445–1(c)(2) for rules concerning delayed reporting and payment where an application for a withholding certificate has been submitted to the IRS prior to or on the date of transfer.

(c) *Adjustment of amount required to be withheld*—(1) *In general.* The Internal Revenue Service may issue a withholding certificate that excuses withholding or that permits the transferee to withhold an adjusted amount reflecting the transferor's maximum tax liability. The transferor's maximum tax liability is the sum of—

(i) The maximum amount which could be imposed as tax under section 871 or 882 upon the transferor's disposition of the subject real property interest, as determined under paragraph (c)(2) of this section, and

(ii) The transferor's unsatisfied withholding liability with respect to the subject real property interest, as determined under paragraph (c)(3) of this section.

In addition, the Internal Revenue Service may issue a withholding certificate that permits the transferee to withhold a reduced amount if the Service determines pursuant to paragraph (c)(4) of this section that reduced withholding will not jeopardize the collection of tax.

(2) *Maximum tax imposed on disposition.* The first element of the transferor's maximum tax liability is the maximum amount which the transferor could be required to pay as tax upon the disposition of the subject real property interest. In the case of an individual transferor that amount will generally be the contract price of the property minus its adjusted basis, multiplied by the maximum individual income tax rate applicable to long term capital gain. In the case of a corporate transferor, that amount will generally be the contract price of the property minus its adjusted basis, multiplied by the maximum corporate income tax rate applicable to long term capital gain. However, that amount must be adjusted to take into account the following:

(i) Any reduction of tax to which the transferor is entitled under the provisions of a U.S. income tax treaty;

(ii) The effect of any nonrecognition provision that is applicable to the transaction;

(iii) Any losses realized and recognized upon the previous disposition of U.S. real property interests during the taxable year;

(iv) Any amount that is required to be treated as ordinary income; and

(v) Any other factor that may increase or reduce the tax upon the disposition.

(3) *Transferor's unsatisfied withholding liability*—(i) *In general.* The second element of the transferor's maximum tax liability is the transferor's unsatisfied withholding liability. That liability is the amount of any tax that the transferor was required to but did not withhold and pay over under section 1445 upon the acquisition of the subject U.S. real property interest or a predecessor

interest. The transferor's unsatisfied withholding liability is included in the calculation of maximum tax liability so that such prior withholding liability can be satisfied by the transferee's withholding upon the current transfer. Alternatively, the transferor's unsatisfied withholding liability may be disregarded for purposes of calculating the maximum tax liability, if either—

(A) Such prior withholding liability is fully satisfied by a payment that is made with the application submitted pursuant to this section; or

(B) An agreement is entered into for the payment of that liability pursuant to the rules of paragraph (e) of this section.

Because section 1445 only requires withholding after December 31, 1984, no transferor's unsatisfied withholding liability can exist unless the transferor acquired the subject or predecessor real property interest after that date. For purposes of this paragraph (c), a predecessor interest is one that was exchanged for the subject U.S. real property interest in a transaction in which the transferor was not required to recognize the full amount of the gain or loss realized upon the transfer.

(ii) *Evidence that no unsatisfied withholding liability exists.* For purposes of paragraph (b)(4)(i)(B) of this section (concerning information that must be submitted with an application for a withholding certificate), evidence that the transferor has no unsatisfied withholding liability includes any one of the following documents:

(A) Evidence that the transferor acquired the subject or predecessor real property interest prior to January 1, 1985;

(B) A copy of the Form 8288 that was filed by the transferor, and proof of payment of the amount shown due thereon, with respect to the transferor's acquisition of the subject or predecessor real property interest;

(C) A copy of a withholding certificate with respect to the transferor's acquisition of the subject or predecessor real property interest, plus a copy of Form 8288 and proof of payment with respect to any withholding required under that certificate;

(D) A copy of the non-foreign certification furnished by the person from whom the subject or predecessor U.S. real property interest was acquired, executed at the time of that acquisition;

(E) Evidence that the transferor purchased the subject or predecessor real property for $300,000 or less, and a statement signed by the transferor under penalties of perjury, that the transferor purchased the property for use as a residence within the meaning of § 1.1445–2(d)(1);

(F) Evidence that the person from whom the transferor acquired the subject or predecessor U.S. real property interest fully paid any tax imposed on that transaction pursuant to section 897.

(G) A copy of a notice of nonrecognition treatment provided to the transferor pursuant to § 1.1445–2(d)(2) by person from whom the transferor acquired the subject or predecessor U.S. real property interest; and

(H) A statement, signed by the transferor under penalties of perjury, setting forth the facts and circumstances that supported the transferor's conclusion that no withholding was required under section 1445(a) with respect to the transferor's acquisition of the subject or predecessor real property interest.

(4) *Special reduction of amount required to be withheld.* The Internal Revenue Service may, in its discretion, issue a withholding certificate that permits the transferee to withhold a reduced amount based upon a determination that reduced withholding will not jeopardize the collection of tax. A transferor that requests a withholding certificate pursuant to this paragraph (c)(4) is required pursuant to paragraph (b)(4)(i)(C) of this section to submit a statement of law and facts in support of the request. That statement must explain why the transferor is unable to enter into an agreement for the payment of tax pursuant to paragraph (e) of this section.

(d) *Transferor's exemption from U.S. tax*—(1) *In general.* The Internal Revenue Service will issue a withholding certificate that excuses all withholding by a transferee if it is established that:

(i) The transferor's gain from the disposition of the subject U.S. real property interest will be exempt from U.S. tax, and

(ii) The transferor has no unsatisfied withholding liability.

For the available exemptions, see paragraph (d)(2) of this section. The transferor's unsatisfied withholding liability shall be determined in accordance with the provisions of paragraph (c)(3) of this section. A transferor that is entitled to a reduction of (rather than an exemption from) U.S. tax may obtain a withholding certificate to that effect pursuant to the provisions of paragraph (c) of this section.

(2) *Available exemptions.* A transferor's gain from the disposition of a U.S. real property interest may be exempt from U.S. tax because either:

(i) The transferor is an integral part or controlled entity of a foreign government and the disposition of the subject property is not a commercial activity, as determined pursuant to section 892 and the regulations thereunder; or

(ii) The transferor is entitled to the benefits of an income tax treaty that provides for such an exemption (subject to the limitations imposed by section 1125(c) of Pub. L. 96–499, which, in general, overrides such benefits as of January 1, 1985).

(e) *Agreement for the payment of tax*—(1) *In general.* The Internal Revenue Service will issue a withholding certificate that excuses withholding or that permits a transferee to withhold a reduced amount, if either the transferee or the transferor enters into an agreement for the payment of tax pursuant to the provisions of this paragraph (e). An agreement for the payment of tax is a contract between the Service and any other person that consists of two necessary elements. Those elements are—

(i) A contract between the Service and the other person, setting forth in detail the rights and obligations of each; and

(ii) A security instrument or other form of security acceptable to the Director, Foreign Operations District.

(2) *Contents of agreement*—(i) *In general.* An agreement for the payment of tax must cover an amount described in subdivision (ii) or (iii) of this paragraph (e)(2). The agreement may either provide adequate security for the payment of the chosen amount in accordance with paragraph (e)(3) of this section, or provide for the payment of that amount through a combination of security and withholding of tax by the transferee.

(ii) *Tax that would otherwise be withheld.* An agreement for the payment of tax may cover the amount of tax that would otherwise be required to be withheld pursuant to section 1445(a). In addition to the amount computed pursuant to section 1445(a), the applicant must agree to pay interest upon that amount, at the rate established under section 6621, with respect to the period between the date on which the tax imposed by section 1445(a) would otherwise be due (*i.e.*, the 20th day after the date of transfer) and the date on which the transferor's payment of tax with respect to the disposition will be due under the agreement. The amount of interest agreed upon must be paid by the applicant regardless of whether or not the Service is required to draw upon any security provided pursuant to the agreement. The interest may be paid either with the return or by the Service drawing upon the security.

(iii) *Maximum tax liability.* An agreement for the payment of tax may cover the transferor's maximum tax liability, determined in accordance with paragraph (c) of this section. The agreement must also provide for the payment of an additional amount equal to 25 percent of the amount determined under paragraph (c) of this section. This additional amount secures the interest and penalties that would accrue between the date of a failure to file a return and pay tax with respect to the disposition, and the date on which the Service collects upon that liability pursuant to the agreement. Such additional amount will only be collected if the Service finds it necessary to draw upon any security provided due to the transferor's failure to file a return and pay tax with respect to the relevant disposition.

(3) *Major types of security*—(i) *In general.* The following are the major types of security acceptable to the Service. Further details with respect to the

terms and conditions of each type may be specified by Revenue Procedure.

(ii) *Bond with surety or guarantor.* The Service may accept as security with respect to a transferor's tax liability a bond that is executed with a satisfactory surety or guarantor. Only the following persons may act as surety or guarantor for this purpose

(A) A surety company holding a certificate of authority from the Secretary as an acceptable surety on Federal bonds, as listed in Treasury Department Circular No. 570, published annually in the FEDERAL REGISTER on the first working day of July;

(B) A person that is engaged within or without the United States in the conduct of a banking, financing, or similar business under the principles of § 1.864–4(c)(5), and that is subject to U.S. or foreign local or national regulation of such business, if that person is otherwise acceptable to the Service; and

(C) A person that is engaged within or without the United States in the conduct of an insurance business that is subject to U.S. or foreign local or national regulation, if that person is otherwise acceptable to the Service.

(iii) *Bond with collateral.* The Service may accept as security with respect to a transferor's tax liability a bond that is secured by acceptable collateral. All collateral must be deposited with a responsible financial institution acting as escrow agent, or, in the Service's discretion, with the Service. Only the following types of collateral are acceptable:

(A) Bonds, notes, or other public debt obligations of the United States, in accordance with the rules of 31 CFR part 225; and

(B) A certified cashier's, or treasurer's check, drawn on an entity acceptable to the Service that is engaged within or without the United States in the conduct of a banking, financing, or similar business under the principles of § 1.864–4(c)(5) and that is subject to U.S. or foreign local or national regulation of such business.

(iv) *Letter of credit.* The Service may accept as security with respect to a transferor's tax liability an irrevocable letter of credit. The Service may accept a letter of credit issued by an entity acceptable to the Service that is engaged within or without the United States in the conduct of a banking, financing, or similar business under the principles of § 1.864–4(c)(5) and that is subject to U.S. or foreign local or national regulation of such business. However, the Director will accept a letter of credit from an entity that is not engaged in trade or business in the United States only if such letter may be drawn on an advising bank within the United States.

(v) *Guarantees and other non-conforming security*—(A) *Guarantee.* The Service may in its discretion accept as security with respect to a transferor's tax liability the applicant's guarantee that it will pay such liability. The Service will in general accept such a guarantee only from a corporation, foreign or domestic, any class of stock of which is regularly traded on an established securities market on the date of the transfer.

(B) *Other forms of security.* The Service may in unusual circumstances and at its discretion accept any form of security that if finds to be adequate. An application for a withholding certificate that proposes a form of security that does not conform with any of the preferred types set forth in paragraph (e)(3) (ii) through (iv) of this section or any relevant Revenue Procedure must include:

(*1*) A detailed statement of the facts and circumstances supporting the use of the proposed form of security, and

(*2*) A memorandum of law concerning the validity and enforceability of the proposed form of security.

(4) *Terms of security instrument.* Any security instrument that is furnished pursuant to this section must provide that—

(i) The amount of each deposit of estimated tax that will be required with respect to the gain realized on the subject disposition may be collected by levy upon the security as of the date following the date on which each such deposit is due (unless such deposit is timely made);

(ii) The entire amount of the liability may be collected by levy upon the security at any time during the nine months following the date on which the payment of tax with respect to the

subject disposition is due, subject to release of the security upon the full payment of the tax and any interest and penalties due. If the transferor requests an extension of time to file a return with respect to the disposition, then the Director may require that the term of the security instrument be extended until the date that is nine months after the filing deadline as extended.

(f) *Amendments to application for withholding certificate*—(1) *In general.* An applicant for a withholding certificate may amend an otherwise complete application by submitting an amending statement to the Director, Philadelphia Service Center, at the address provided in §1.1445–1(g)(10). The amending statement shall provide the information required by §1.1445–3(f)(3) and must be signed and accompanied by a penalties of perjury statement in accordance with §1.1445–3(b)(1).

(2) *Extension of time for the Service to process reqests for withholding certificates*—(i) *In general.* If an amending statement is submitted, the time in which the Internal Revenue Service must act upon the amended application shall be extended by 30 days.

(ii) *Substantial amendments.* If an amending statement is submitted and the Service finds that the statement substantially amends the facts of the underlying application or substantially alters the terms of the withholding certificate as requested in the initial application, the time within which the Service must act upon the amended application shall be extended by 60 days. The applicant shall be so notified.

(iii) *Amending statement received after the requested withholding certificate has been signed by the Director, Philadelphia Service Center.* If an amending statement is received after the withholding certificate, drafted in response to the underlying application, has been signed by the Director, Philadelphia Service Center or his delegate and prior to the day such certificate is mailed to the applicant, the time in which the Service must act upon the amended application shall be extended by 90 days. The applicant will be so notified.

(3) *Information required to be submitted.* No particular form is required for an amending statement but the statement must provide the following information:

(i) *Identification of applicant.* The amending statement must set forth the name, address and identifying number of the person submitting the amending statement (specifying whether that person is the transferee or transferor).

(ii) *Date of underlying application.* The amending statement must set forth the date of the underlying application for a withholding certificate.

(iii) *Real property interest to be (or that has been) transferred.* The amending statement must set forth a brief description of the real property interest with respect to which the underlying application for a withholding certificate was submitted.

(iv) *Amending information.* The amending statement must fully set forth the basis for the amendment including any modification of the facts supporting the application for a withholding certificate and any change sought in the terms of the withholding certificate.

(g) *Early refund of overwithheld amounts.* If a transferor receives a withholding certificate pursuant to this section, and an amount greater than that specified in the certificate was withheld by the transferee, then pursuant to the rules of this paragraph (g) the transferor may apply for a refund (without interest) of the excess amount prior to the date on which the transferor's tax return is due (without extensions). (Any interest payable on refunds issued after the filing of a tax return shall be determined in accordance with the provisions of section 6611 and regulations thereunder.) An application for an early refund must be addressed to the Director, Philadelphia Service Center, at the address provided in §1.1445–1(g)(10). No particular form is required for the application, but the following information must be set forth in separate paragraphs numbered to correspond with the number given below:

(1) Name, address, and identifying number of the transferor seeking the refund;

(2) Amount required to be withheld pursuant to the withholding certificate issued by Internal Revenue Service;

(3) Amount withheld by the transferee (attach a copy of Form 8288–A stamped by IRS pursuant to §1.1445–1(c));

(4) Amount to be refunded to the transferor. An application for an early refund cannot be processed unless the required copy of Form 8288–A (or substantial evidence of the amount withheld in the case of a failure to receive Form 8288–A as provided in §1.1445–1(f)(3)) is attached to the application. If an application for a withholding certificate based upon the transferor's maximum tax liability is submitted after the transfer takes place, then that application may be combined with an application for an early refund. The Service will act upon a claim for refund within the time limits set forth in paragraph (a) of this section.

(h) *Effective date for taxpayer identification numbers.* The requirement in paragraphs (b)(2), (f)(3)(i), and (g)(1) of this section that taxpayer identification numbers be provided (in all cases) is applicable for dispositions of U.S. real property interests occurring after November 3, 2003.

[T.D. 8113, 51 FR 46637, Dec. 24, 1986; 52 FR 3796, Feb. 6, 1987; T.D. 9082, 68 FR 46085, Aug. 5, 2003]

§1.1445–4 Liability of agents.

(a) *Duty to provide notice of false certification or statement to transferee.* A transferee's or transferor's agent must provide notice to the transferee if either—

(1) The transferee is furnished with a non-U.S. real property interest statement pursuant to §1.1445-2(c)(3) and the agent knows that the statement is false; or

(2) The transferee is furnished with a non-foreign certification pursuant to §1.1445–2(b)(2) and either (i) the agent knows that the certification is false, or (ii) the agent represents a transferor that is a foreign corporation. An agent that represents a transferor that is a foreign corporation is not required to provide notice to the transferee if the foreign corporation provided a non-foreign certification to the transferee prior to such agent's employment and the agent does not know that the corporation did so.

(b) *Duty to provide notice of false certification or statement to entity or fiduciary.* A transferee's or transferor's agent must provide notice to an entity or fiduciary that plans to carry out a transaction described in section 1445(e)(1), (2), (3), or (4) if either—

(1) The entity or fiduciary is furnished with a non-U.S. real property interest statement pursuant to §1.1445–5(b)(4)(iii) and the agent knows that such statement is false; or

(2) The entity or fiduciary is furnished with a non-foreign certification pursuant to §1.1445–5(b)(3) (ii) and either (i) the agent knows that such certification is false, or (ii) the agent represents a foreign corporation that made such a certification.

(c) *Procedural requirements*—(1) *Notice to transferee, entity, or fiduciary.* An agent who is required by this section to provide notice must do so in writing as soon as possible after learning of the false certification or statement, but not later than the date of the transfer (prior to the transferee's payment of consideration). If an agent first learns of a false certification or statement after the date of the transfer, notice must be given by the third day following that discovery. The notice must state that the certification or statement is false and may not be relied upon. The notice must also explain the possible consequences to the recipient of a failure to withhold. The notice need not disclose the information on which the agent's statement is based. The following is an example of an acceptable notice.''This is to notify you that you may be required to withhold tax in connection with (*describe transaction*). You have been provided with a certification of non-foreign status (or a non-U.S. real property interest statement) in connection with that transaction. I have learned that that document is false. Therefore, you may not rely upon it as a basis for failing to withhold under section 1445 of the Internal Revenue Code. Section 1445 provides that any person who acquires a U.S. real property interest from a foreign person must withhold a tax equal to 10 percent of the total purchase price. (The term 'U.S. real property interest' includes real property, stock in

U.S. corporations whose assets are primarily real property, and some personal property associated with realty.) Any person who is required to withhold but fails to do so can be held liable for the tax. Thus, if you do not withhold the 10 percent tax from the total that you pay on this transaction you could be required to pay the tax yourself, if what you are acquiring is a U.S. real property interest and the transferor is a foreign person. Tax that is withheld must be promptly paid over to the IRS using Form 8288. For further information see sections 897 and 1445 of the Internal Revenue Code and the related regulations.''

(2) *Notice to be filed with IRS.* An agent who is required by paragraph (a) or (b) of this section to provide notice to a transferee, entity, or fiduciary must furnish a copy of that notice to the Internal Revenue Service by the date on which the notice is required to be given to the transferee, entity, or fiduciary. The copy of the notice must be delivered to the Director, Philadelphia Service Center at the address provided in §1.1445–1(g)(10) and must be accompanied by a cover letter stating that the copy is being filed pursuant to the requirements of this §1.1445–4(c)(2).

(d) *Effect on recipient.* A transferee, entity, or fiduciary that receives a notice pursuant to this section prior to the date of the transfer from any agent of the transferor or transferee may not rely upon the subject certification or statement for purposes of excusing withholding pursuant to §1.1445–2 or §1.1445–5. Therefore, the recipient of a notice may be held liable for any failure to deduct and withhold tax under section 1445 as if such certification or statement had never been given. For special rules concerning the effect of the receipt of a notice after the date of the transfer, see §§1.1445–2(b)(4)(iv) and 1.1445–5 (c), (d) and (e).

(e) *Failure to provide notice.* Any agent who is required to provide notice but who fails to do so in the manner required by paragraph (a) or (b) of this section shall be held liable for the tax that the recipient of the notice would have been required to withhold under section 1445 if such notice had been given. However, an agent's liability under this paragraph (e) is limited to the amount of compensation that that agent derives from the transaction. In addition, an agent who assists in the preparation of, or fails to disclose knowledge of, a false certification or statement may be liable for civil or criminal penalties.

(f) *Definition of transferor's or transferee's agent*—(1) *In general.* For purposes of this section, the terms ''transferor's agent'' and ''transferee's agent'' means any person who represents the transferor or transferee (respectively)—

(i) In any negotiation with another person (or another person's agent) relating to the transaction; or

(ii) In settling the transaction.

(2) *Transactions subject to section 1445(e).* In the case of transactions subject section 1445(e), the following definitions apply.

(i) The term ''transferor's agent'' means any person that represents or advises an entity or fiduciary with respect to the planning, arrangement, or consummation by the entity of a transaction described in section 1445(e) (1), (2), (3), or (4).

(ii) The term ''transferee's agent'' means any person that represents or advises the holder of an interest in an entity with respect to the planning, arrangement or consummation by the entity of a transaction described in section 1445(e) (1), (2), (3), or (4).

(3) *Exclusion of settlement officers and clerical personnel.* For purposes of this section, a person shall not be treated as a transferor's agent or transferee's agent with respect to any transaction solely because such person performs one or more of the following activities.

(i) The receipt and disbursement of any portion of the consideration for the transaction;

(ii) The recording of any document in connection with the transaction;

(iii) Typing, copying, and other clerical tasks;

(iv) The obtaining of title insurance reports and reports concerning the condition of the real property that is the subject of the transaction; or

(v) The transmission or delivery of documents between the parties.

(4) *Exclusion for governing body of a condominium association and the board of*

directors of a cooperative housing corporation. The members of a board, committee or other governing body of a condominium association and the board of directors and officers of a cooperative housing corporation will not be deemed agents of the transferor or transferee if such individuals function exclusively in their capacity as representatives of such association or corporation with respect to the transaction. In addition, the managing agent of a cooperative housing corporation or condominium association will not be deemed to be an agent of the transferee or transferor if such person functions exclusively in its capacity as a managing agent. If a person's activities include advising the transferee or transferor with respect to the transfer, this exclusion shall not apply.

[T.D. 8113, 51 FR 46641, Dec. 24, 1986; 52 FR 3796, 3917, Feb. 6, 1987; T.D. 9082, 68 FR 46086, Aug. 5, 2003]

§ 1.1445–5 Special rules concerning distributions and other transactions by corporations, partnerships, trusts, and estates.

(a) *Purpose and scope*. This section provides special rules concerning the withholding that is required under section 1445(e) upon distributions and other transactions involving domestic or foreign corporations, partnerships, trusts, and estates. Paragraph (b) of this section provides rules that apply generally to the various withholding requirements set forth in this section. Under section 1445(e)(1) and paragraph (c) of this section, a domestic partnership or the fiduciary of a domestic trust or estate is required to withhold tax upon the entity's disposition of a U.S. real property interest if any foreign persons are partners or beneficiaries of the entity. Paragraph (d) provides rules concerning the requirement of section 1445(e)(2) that a foreign corporation withhold tax upon its distribution of a U.S. real property interest to its interest-holders. Finally, under section 1445(e)(3) and paragraph (e) of this section a domestic U.S. real property holding corporation is required to withhold tax upon certain distributions to interest-holders that are foreign persons. Paragraphs (f) and (g) of this section are reserved to provide rules concerning transactions involving interests in partnerships, trusts, and estates that will be subject to withholding pursuant to sections 1445(e) (4) and (5).

(b) *Rules of general application*—(1) *Double withholding not required*. If tax is required to be withheld with respect to a transfer of property in accordance with the rules of this section, then no additional tax is required to be withheld by the transferee of the property with respect to that transfer pursuant to the general rules of section 1445(a) and § 1.1445–1. For rules coordinating the withholding under section 1441 (or section 1442 or 1443) and under section 1445 on distributions from a corporation, see § 1.1441–3(b)(4). If a transfer of a U.S. real property interest described in section 1445(e) is exempt from withholding under the rules of this section, then no withholding is required under the general rules of section 1445(a) and § 1.1445–1.

(2) *Coordination with nonrecognition provisions*—(i) *In general*. Withholding shall not be required under the rules of this section with respect to a transfer described in section 1445(e) of a U.S. real property interest if—

(A) By reason of the operation of a nonrecognition provision of the Internal Revenue Code or the provisions of any treaty of the United States no gain or loss is required to be recognized by the foreign person with respect to which withholding would otherwise be required; and

(B) The entity or fiduciary that is otherwise required to withhold complies with the notice requirements of paragraph (b)(2)(ii) of this section. The entity or fiduciary must determine whether gain or loss is required to be recognized pursuant to the rules of section 897 and the applicable nonrecognition provisions of the Internal Revenue Code. An entity or fiduciary may obtain a withholding certificate from the Internal Revenue Service that confirms the applicability of a nonrecognition provision, but is not required to do so. For purposes of this paragraph (b)(2), a nonrecognition provision is any provision of the Internal Revenue Code for not recognizing gain or loss. If nonrecognition treatment is available only

with respect to part of the gain realized on a transfer, the exemption from withholding provided by this paragraph (b)(2) shall not apply. In such cases a withholding certificate may be sought pursuant to the provisions of § 1.1445–6.

(ii) *Notice of nonrecognition transfer.* An entity or fiduciary that fails to withhold tax with respect to a transfer in reliance upon the rules of this paragraph (b)(2) must by the 20th day after the date of the transfer deliver a notice thereof to the Director, Philadelphia Service Center, at the address provided in § 1.1445–1(g)(10). No particular form is required for a notice of transfer, but the following information must be set forth in paragraphs labelled to correspond with the letter set forth below:

(A) A statement that the document submitted constitutes a notice of a nonrecognition transfer pursuant to the requirements of § 1.1445–5(b)(2)(ii);

(B) The name, office address, and identifying number of the entity of fiduciary submitting the notice;

(C) The name, identifying number, and home address (in the case of an individual) or office address (in the case of an entity) of each foreign person with respect to which withholding would otherwise be required;

(D) A brief description of the transfer; and

(E) A brief statement of the law and facts supporting the claim that recognition of gain or loss is not required with respect to the transfer.

(3) *Interest-holder not a foreign person*—(i) *In general.* Pursuant to the provisions of paragraphs (c) and (e) of this section, an entity or fiduciary is required to withhold with respect to certain transfers of property if a holder of an interest in the entity is a foreign person. For purposes of determining whether a holder of an interest is a foreign person, and entity or fiduciary may rely upon a certification of nonforeign status provided by that person in accordance with paragraph (b)(3)(ii) of this section. Except to the extent provided in paragraph (b)(3)(iii) of this section, such a certification excuses the entity or fiduciary from any liability otherwise imposed pursuant to section 1445(e) and regulations thereunder. However, no obligation is imposed upon an entity or fiduciary to obtain certifications from interest-holders; an entity or fiduciary may instead rely upon other means to ascertain the nonforeign status of an interest-holder. If the entity or fiduciary does rely upon other means but the interest-holder proves, in fact, to be a foreign person, then the entity or fiduciary is subject to any liability imposed pursuant to section 1445 and regulations thereunder.

An entity or fiduciary is not required to rely upon other means to ascertain the non-foreign status of an interest-holder and may demand a certification of non-foreign status. If the certification is not provided, the entity or fiduciary may withhold tax under section 1445 and will be considered, for purposes of sections 1461 through 1463, to have been required to withhold such tax.

(ii) *Interest-holder's certification of non-foreign status*—(A) *In general.* For purposes of this section, an entity or fiduciary may treat any holder of an interest in the entity as a U.S. person if that interest-holder furnishes to the entity or fiduciary a certification stating that the interest-holder is not a foreign person, in accordance with the provisions of paragraph (b)(3)(ii)(B) of this section. In general, a foreign person is a nonresident alien individual, foreign corporation, foreign partnership, foreign trust, or foreign estate, but not a resident alien individual. In this regard, see § 1.897–1(k).

(B) *Procedural rules.* An interest-holder's certification of non-foreign status must—

(*1*) State that the interest-holder is not a foreign person;

(*2*) Set forth the interest-holder's name, identifying number, home address (in the case of an individual), or office address (in the case of an entity), and place of incorporation (in the case of a corporation); and

(*3*) Be signed under penalties of perjury.

Pursuant to § 1.897–1(p), an individual's identifying number is the individual's Social Security number and any other person's identifying number is its U.S. employer identification number. The certification must be signed by a responsible officer in the case of a corporation, by a general partner in the

case of a partnership, and by a trustee, executor, or equivalent fiduciary in the case of a trust or estate. No particular form is needed for a certification pursuant to this paragraph (b)(3)(ii)(B), nor is any particular language required, so long as the document meets the requirements of this paragraph. Samples of acceptable certifications are provided in paragraph (b)(3)(ii)(D) of this section. An entity may rely upon a certification pursuant to this paragraph (b)(3)(ii)(B) for a period of two calendar years following the close of the calendar year in which the certification was given.

If an interest holder becomes a foreign person within the period described in the preceding sentence, the interest-holder must notify the entity prior to any further dispositions or distributions and upon receipt of such notice (or any other notification of the foreign status of the interest-holder) the entity may no longer rely upon the prior certification. An entity that obtains and relies upon a certification must retain that certification with its books and records for a period of three calendar years following the close of the last calendar year in which the entity relied upon the certification.

(C) *Foreign corporation that has made an election under section 897(i).* A foreign corporation that has made a valid election under section 897(i) to be treated as a domestic corporation for purposes of section 897 may provide a certification of non-foreign status pursuant to this paragraph (b)(3)(ii). However, an electing foreign corporation must attach to such certification a copy of the acknowledgment of the election provided to the corporation by the Internal Revenue Service pursuant to § 1.897–3(d)(4).

An acknowledgment is valid for this purpose only if it states that the information required by § 1.897–3 has been determined to be complete.

(D) *Sample certifications—(1) Individual interest-holder.*

''Under section 1445(e) of the Internal Revenue Code, a corporation, partnership, trust or estate must withhold tax with respect to certain transfers of property if a holder of an interest in the entity is a foreign person. To inform (*name of entity*) that no withholding is required with respect to my interest in it, I, (*name of interest-holder*), hereby certify the following:

1. I am not a nonresident alien for purposes of U.S. income taxation;

2. My U.S. taxpayer identifying number (Social Security number) is _____; and

3. My home address is

_____

_____

I agree to inform [name of entity] promptly if I become a nonresident alien at any time during the three years immediately following the date of this notice.

I understand that this certification may be disclosed to the Internal Revenue Service by (*name of entity*) and that any false statement I have made here could be punished by fine, imprisonment, or both.

Under penalties of perjury I declare that I have examined this certification and to the best of my knowledge and belief it is true, correct, and complete.

[*Signature and date*]''

(*2*) *Entity interest-holder.* ''Under section 1445(e) of the Internal Revenue Code, a corporation, partnership, trust, or estate must withhold tax with respect to certain transfers of property if a holder of an interest in the entity is a foreign person. To inform [*name of entity*] that no withholding is required with respect to [*name of interest-holder*]'s interest in it, the undersigned hereby certifies the following on behalf of [*name of interest-holder*]:

1. [*Name of interest-holder*] is not a foreign corporation, foreign partnership, foreign trust, or foreign estate (as those terms are defined in the Internal Revenue Code and Income Tax Regulations);

2. [*Name of interest-holder*]'s U.S. employer identification number is _____; and

3. [*Name of interest-holder*]'s office address is

_____

and place of incorporation (if applicable) is

_____

[*Name of interest holder*] agrees to inform [*name of entity*] if it becomes a foreign person at any time during the three year period immediately following the date of this notice.

[*Name of interest-holder*] understands that this certification may be disclosed to the Internal Revenue Service by [*name of entity*] and that any false statement contained herein could be punished by fine, imprisonment, or both.

Under penalties of perjury I declare that I have examined this certification and to the best of my knowledge and belief it is true, correct, and complete, and I further declare that I have authority to sign this document on behalf of [*name of interest-holder*].

[*Signature and date*]

[*Title*]''

(iii) *Reliance upon certification not permitted.* An entity or fiduciary may not rely upon an interest-holder's certification of non-foreign status if, prior to or at the time of the transfer with respect to which withholding would be required, the entity or fiduciary either—

(A) Has actual knowledge that the certification is false;

(B) Has received a notice that the certification is false from a transferor's or transferee's agent, pursuant to § 1.1445–4; or

(C) Has received from a corporation that it knows to be a foreign corporation a certification that does not have attached to it a copy of the IRS acknowledgment of the corporation's election under section 897(i), as required by paragraph (b)(3)(ii)(C) of this section. Such an entity's or fiduciary's withholding obligations shall apply as if a statement had never been given, and such an entity or fiduciary may be held fully liable pursuant to § 1.1445–1(e) for any failure to withhold. For special rules concerning an entity's belated receipt of a notice concerning a false certification, see paragraphs (c)(2)(ii) and (e)(2)(iii) of this section.

(4) *Property transferred not a U.S. real property interest*—(i) *In general.* Pursuant to the provisions of paragraphs (c) and (d) of this section, an entity or fiduciary is required to withhold with respect to certain transfers of property, if the property transferred is a U.S. real property interest. (In addition, taxable distributions of U.S. real property interests by domestic or foreign partnerships, trusts, and estates will be subject to withholding pursuant to section 1445(e)(4) and paragraph (f) of this section after publication of a Treasury decision under sections 897 (e)(2) and (g). As defined in section 897(c) and § 1.897–1(c), a U.S. real property interest includes certain interests in U.S. corporations, as well as direct interests in real property and certain associated personal property. This paragraph (b)(4) provides rules pursuant to which an entity (or fiduciary thereof) that transfers an interest in a U.S. corporation may determine that withholding is not required because the interest transferred is not a U.S. real property interest. To determine whether an interest in tangible property constitutes a U.S. real property interest the transfer of which would be subject to withholding, see § 1.897–1 (b) and (c).

(ii) *Interests in publicly traded entities.* Withholding is not required under paragraph (c) or (d) of this section upon an entity's transfer of an interest in a domestic corporation if any class of stock of the corporation is regularly traded on an established securities market. This exemption shall apply to a disposition incident to an initial public offering of stock pursuant to a registration statement filed with the Securities and Exchange Commission.

Similarly, no withholding is required under paragraph (c) or (d) of this section upon an entity's transfer of an interest in a publicly traded partnership or trust. However, the rule of this paragraph (b)(4)(ii) shall not apply to the transfer, to a single transferee (or related transferees as defined in § 1.897–1(i)) in a single transaction (or related transactions), of an interest described in § 1.897–1(c)(2)(iii)(B) (relating to substantial amounts of non-publicly traded interests in publicly traded corporations) or of similar interests in publicly traded partnerships or trusts. The entity making a transfer described in the preceding sentence must otherwise determine whether withholding is required, pursuant to section 1445(e) and the regulations thereunder. Transactions shall be deemed to be related if they are undertaken within 90 days of one another or if it can otherwise be shown that they were undertaken in pursuance of a prearranged plan.

(iii) *Corporation's statement that interest is not a U.S. real property interest.* (A) *In general.* No withholding is required under paragraph (c) or (d) of this section upon an entity's transfer of an interest in a domestic corporation if, prior to the transfer, the entity or fiduciary obtains a statement, issued by the corporation pursuant to § 1.897–2(h), certifying that the interest is not a U.S. real property interest. In general, a corporation may issue such a statement only if the corporation was not a U.S. real property holding corporation at any time during the previous five years (or the period in which the interest was held by its present holder, if

shorter) or if interests in the corporation ceased to be United States real property interests under section 897(c)(1)(B). (A corporation may not provide such a statement based on its determination that the interest in question is an interest solely as a creditor.) See § 1.897–2 (f) and (h). A corporation's statement may be relied upon for purposes of this paragraph (b)(4)(iii) only if the statement is dated not more than 30 days prior to the date of the transfer.

(B) *Reliance on statement not permitted.* An entity or fiduciary is not entitled to rely upon a statement that an interest in a corporation is not a U.S. real property interest, if, prior to or at the time of the transfer, the entity or fiduciary either—

(*1*) Has actual knowledge that the statement is false, or

(*2*) Receives a notice that the statement is false from a transferor's or transferee's agent, pursuant to § 1.1445–4.

Such an entity's or fiduciary's withholding obligations shall apply as if a statement had never been given, and such an entity or fiduciary may be held fully liable pursuant to § 1.1445–1(e) for any failure to withhold. For special rules concerning an entity's belated receipt of a notice concerning a false statement, see paragraphs (c)(2)(iii) and (d)(2)(i) of this section.

(5) *Reporting and paying over of withheld amounts*—(i) *In General.* An entity or fiduciary must report and pay over to the Internal Revenue Service any tax withheld pursuant to section 1445(e) and this section by the 20th day after the date of the transfer (as defined in § 1.1445–1(g)(8). Forms 8288 and 8288–A are used for this purpose and must be filed at the location as provided in the instructions to Forms 8288 and 8288–A. The contents of Forms 8288 and 8288–A are described in § 1.1445–1(d). Pursuant to section 7502 and regulations thereunder, the timely mailing of Forms 8288 and 8288–A by U.S. mail will be treated as their timely filing. Form 8288–A will be stamped by the Internal Revenue Service to show receipt, and a stamped copy will be mailed by the Service to the interest holder if the Form 8288 is complete, including the transferor's identifying number, at the address shown on the form, for the interest-holder's use. See paragraph (b)(7) of this section. If an application for a withholding certificate with respect to a transfer of a U.S. real property interest was submitted to the Internal Revenue Service on the day of or at any time prior to the transfer, the entity or fiduciary must withold the amount required under section 1445(e) and the rules of this section. However, the amount withheld, or a lesser amount as determined by the Service, need not be reported and paid over to the Service until the 20th day following the Service's final determination. For this purpose, the Service's final determination occurs on the day when the withholding certificate is mailed to the applicant by the Service or when a notification denying the request for a withholding certificate is mailed to the applicant by the Service. An application is submitted to the Service on the day it is actually received by the Service at the address provided in § 1.1445–1(g)(10) or, under the rules of section 7502, on the day it is mailed to the Service at the address provided in § 1.1445–1(g)(10). For rules concerning the issuance of withholding certificates, see § 1.1445–6.

(ii) *Anti-abuse rule.* An entity or fiduciary that in reliance upon the rules of this paragraph (b)(5)(ii) fails to report and pay over amounts withheld by the 20th day following the date of the transfer, shall be subject to the payment of interest and penalties if the relevant application for a withholding certificate (or an amendment of the application for a withholding certificate) was submitted for a principle purpose of delaying the payment to the IRS of the amount withheld. Interest and penalties shall be assessed on the amount that is ultimately paid over, with respect to the period between the 20th day after the date of the transfer and the date on which payment is made.

(6) *Liability upon failure to withhold.* For rules regarding liability upon failure to withhold under section 1445(e) and this § 1.1445–5, see § 1.1445–1(e).

(7) *Effect of withholding by entity or fiduciary upon interest holder.* The withholding of tax under section 1445(e) does not excuse a foreign person that is subject to U.S. tax by reason of the operation of section 897 from filing a U.S.

tax return. Thus, Form 1040NR. 1041. or 1120F, as appropriate must be filed and any tax due must be paid, by the filing date otherwise applicable to such person (or any extension thereof). The tax withheld with respect to the foreign person under section 1445(e) (as shown on Form 8288–A) shall be credited against the amount of income tax as computed in such return, but only if the stamped copy of Form 8288–A provided to the entity or fiduciary (under paragraph (b)(5) of this section) is attached to the return or substantial evidence of the amount of tax withheld is attached to the return in accordance with the succeeding sentence. If a stamped copy of Form 8288–A has not been provided to the interest-holder by the Service, the interest-holder may establish the amount of tax withheld by the entity or fiduciary by attaching to its return substantial evidence of such amount. Such an interest-holder must attach to its return a statement which supplies all of the information required by §1.1445–1(d)(2). If the amount withheld under section 1445(e) constitutes less than the full amount of the foreign person's U.S. tax liability for that taxable year, then a payment of estimated tax may be required to be made pursuant to section 6154 or 6654 prior to the filing of the income tax return for the year. Alternatively, if the amount withheld under section 1445(e) exceeds the foreign person's maximum tax liability with respect to the transaction (*as reflected* in a withholding certificate issued by the Internal Revenue Service pursuant to §1.1445–6), then the foreign person may seek an early refund of the excess pursuant to §1.1445–6(g). A foreign person that takes gain into account in accordance with the provisions of section 453 shall not be entitled to a refund to the amount withheld, unless a withholding certificate providing for such a refund is obtained pursuant to §1.1445–6. If an entity or fiduciary withholds tax under section 1445(e) with respect to a beneficial owner of an interest who is not a foreign person, such beneficial owner may credit the amount of any tax withheld against his income tax liability in accordance with the provisions of this §1.1445–5(b)(7) or apply for an early refund under §1.1445–6(g).

(8) *Effective dates*—(i) *Partnership, trust, and estate dispositions of U.S. real property interests.* The provisions of section 1445(e)(1) and paragraph (c) of this section, requiring withholding upon certain dispositions of U.S. real property interests by domestic partnerships, trusts, and estates, shall apply to any disposition on or after January 1, 1985.

(ii) *Certain distributions by foreign corporations.* The provisions of section 1445(e)(2) and paragraph (d) of this section, requiring withholding upon distributions of U.S. real property interests by foreign corporations shall apply to distributions made on or after January 1, 1985.

(iii) *Distributions by certain domestic corporations to foreign shareholders.* The provisions of section 1445(e)(3) and paragraph (e)(1) of this section, requiring withholding upon distributions in redemption of stock under section 302(a) or liquidating distributions under Part II of subchapter C of the Internal Revenue Code by U.S. real property holding corporations to foreign shareholders, shall apply to distributions made on or after January 1, 1985. The provisions of section 1445(e)(3) and paragraph (e)(1) of this section requiring withholding on distributions under section 301 by U.S. real property holding corporations to foreign shareholders shall apply to distributions made after August 20, 1996. The provisions of paragraph (e) of this section providing for the coordination of withholding between sections 1445 and 1441 (or 1442 or 1443) for distributions under section 301 by U.S. real property holding corporations to foreign shareholders apply to distributions after December 31, 2000 (see §1.1441–3(c)(4) and (h)).

(iv) *Taxable distributions by domestic or foreign partnerships, trusts, and estates.* The provisions of section 1445(e)(4), requiring withholding upon certain taxable distributions by domestic or foreign partnerships, trusts, and estates, shall apply to distributions made on or after the effective date of a Treasury decision under section 897 (e)(2)(B)(ii) and (g).

(v) [Reserved]

(vi) *Tiered Partnerships.* No withholding is required upon the disposition of a U.S. real property interest by a partnership which is directly owned, in whole or in part, by another domestic partnership (but only to the extent that the amount realized is attributable to the partnership interest of that other partnership) until the effective date of a Treasury Decision published under section 1445(e) providing rules governing this matter.

(c) *Dispositions of U.S. real property interests by domestic partnerships, trusts, and estates*—(1) *Withholding required*—(i) *In general.* If a domestic partnership, trust, or estate disposes of a U.S. real property interest and any partner, beneficiary, or owner of the entity is a foreign person, then the partnership or the trustee, executor, or equivalent fiduciary of the trust or estate must withhold tax with respect to each such foreign person in accordance with the provisions of subdivision (ii), (iii), or (iv), of this paragraph (c)(1) (as applicable). The withholding obligation imposed by this paragraph (c) applies to the fiduciary of a trust even if the grantor of the trust or another person is treated as the owner of the trust or any portion thereof for purposes of the Internal Revenue Code. Thus, the withholding obligation imposed by this paragraph (c) applies to the trustee of a land trust or similar arrangement, even if such a trustee is not ordinarily treated under the applicable provisions of local law as a true fiduciary.

(ii) *Disposition by partnership.* A partnership must withhold a tax equal to 35 percent (or the highest rate specified in section 1445(e)(1)) of each foreign partner's distributive share of the gain realized by the partnership upon the disposition of each U.S. real property interest. Such distributive share of the gain must be determined pursuant to the principles of section 704 and the regulations thereunder. For the rules applicable to partnerships, interests in which are regularly traded on an established securities market, see § 1.1445–8.

(iii) *Disposition by trust or estate.*—(A) *In general.* A trustee, fiduciary, executor or equivalent fiduciary (hereafter collectively referred to as the fiduciary) of a trust or estate having one or more foreign beneficiaries must withhold tax in accordance with the rules of this § 1.1445–5(c)(1)(iii). Such a fiduciary must establish a U.S. real property interest account and must enter in such account all gains and losses realized during the taxable year of the trust or estate from dispositions of U.S. real property interests. The fiduciary must withhold 35 percent (or the highest rate specified in section 1445(e)(1)) of any distribution to a foreign beneficiary that is attributable to the balance in the U.S. real property interest account on the day of the distribution. A distribution from a trust or estate to a beneficiary (domestic or foreign) shall, solely for purposes of section 1445(e)(1), be deemed to be attributable first to any balance in the U.S. real property interest account and then to other amounts. However, a distribution that occurs prior to the transfer of a U.S. real property interest in a taxable year or at any other time when the amount contained in the U.S. real property interest account is zero, is not subject to withholding under this § 1.1445–5(c)(1)(iii). The U.S. real property interest account is reduced by the amount distributed to all beneficiaries (domestic and foreign) attributable to such account during the taxable year of the trust or estate. Any ending balance of the U.S. real property interest account not distributed by the close of the taxable year of the trust or estate is cancelled and is not carried over (or carried back) to any other year. Thus, the beginning balance of such account in any taxable year of the trust or estate is always zero. For rules applicable to grantor trusts see § 1.1445–5(c)(1)(iv). For rules applicable to trusts, interests in which are regularly traded on an established securities market and real estate investment trusts, see § 1.1445–8.

(B) *Example.* The following example illustrates the rules of paragraph (c)(1)(iii)(A) of this section.

On January 1, 1994, A establishes a domestic trust (which has as its taxable year, the calendar year) for the benefit of B, a nonresident alien, and C, a U.S. citizen. The trust is not a trust subject to sections 671 through 679. Under the terms of the trust, the trustee, T, is given discretion to distribute income and corpus of the trust to provide for the reasonable needs of B and C. During the trust's 1994 tax year, T disposes

of three parcels of vacant land located in the United States. The following chart illustrates the computation of the amount subject to withholding under section 1445 with respect to distributions made by T to B and C during 1994.

Date	Parcel sold	Gains or (loss) realized	Distributions to C	Distributions to B (before withholding)	Section 1445 withholding 35% rate	U.S. real property interest account
1/01/94						-0-
3/01/94	Parcel 1	140,000				140,000
3/05/94			5,000	10,000	3,500	125,000
3/15/94			10,000	5,000	1,750	110,000
5/01/94	Parcel 2	300,000				410,000
5/15/94	Parcel 3	(50,000)				360,000
12/01/94			170,000	170,000	59,500	20,000
1/01/95						-0-

(iv) *Disposition by grantor trust.* The trustee or equivalent fiduciary of a trust that is subject to the provisions of subpart E of part 1 of subchapter J (sections 671 through 679) must withhold a tax equal to 35 percent (or the highest rate specified in section 1445(e)(1)) of the gain realized from each disposition of a U.S. real property interest to the extent such gain is allocable to a portion of the trust treated as owned by a foreign person under subpart E of part 1 of subchapter J.

(2) *Withholding not required under paragraph (c)*—(i) [Reserved]

(ii) *Interest-holder not a foreign person*—(A) *In general.* A domestic partnership, trust, or estate that disposes of a U.S. real property interest shall not be required to withhold with respect to any partner or beneficiary that it determines, pursuant to the rules of paragraph (b)(3) of this section, not to be a foreign person.

(B) *Belated notice of false certification.* If after the date of the transfer a partnership or fiduciary learns that a partner's or beneficiary's certification of non-foreign status is false, then that partnership or fiduciary shall be required to withhold, with respect to the foreign partner or beneficiary that gave the false certification, the lessor of—

(*1*) The amount otherwise required to be withheld under the rules of this paragraph (c), or

(*2*) An amount equal to that partner's or beneficiary's remaining interests in the income or assets of the partnership, trust, or estate. Amounts so withheld must be reported and paid over by the 60th day following the date on which the partnership or fiduciary learns that the certification is false. For rules concerning the notifications of false certifications that may be required to be given to partnerships and fiduciaries, see § 1.1445–4(b).

(iii) *Property disposed of not a U.S. real property interest*—(A) *In general.* No withholding is required under this paragraph (c) if a domestic partnership, trust, or estate that disposes of property determines pursuant to the rules of paragraph (b)(4) of this section that the property disposed of is not a U.S. real property interest.

(B) *Belated notice of false statement.* If after the date of the transfer a partnership or fiduciary learns that a corporation's statement (that an interest in the corporation is not a U.S. real property interest) is false, then that partnership or fiduciary shall be required to withhold, with respect to each foreign partner or beneficiary, the lesser of—

(*1*) The amount otherwise required to be withheld under the rules of this paragraph (c), or

(*2*) An amount equal to that partner's or beneficiary's remaining interests in the income or assets of the parnership, trust, or estate.

Amounts so withheld must be reported and paid over by the 60th day following the date on which the partnership or fiduciary learns that the statement is false. For rules concerning the notifications of false statements that may be required to be given to partnerships or fiduciaries, see § 1.1445–4(b).

(iv) *Withholding certificate.* No withholding is required under this paragraph (c) with respect to the transfer of

a U.S. real property interest if the Internal Revenue Service issues a withholding certificate that so provides. For rules concerning the issuance of withholding certificates, see § 1.1445–6.

(v) *Nonrecognition transactions.* For special rules concerning transactions entitled to nonrecognition of gain or loss, see paragraph (b)(2) of this section.

(3) *Large partnerships or trusts*—(i) *In general.* If a partnership or trust has more than 100 partners or beneficiaries, then the partnership or fiduciary of the trust may elect to withhold in accordance with the provisions of this § 1.1445–5(c)(3) in lieu of withholding in the manner required by § 1.1445–5(c)(1). However, the rules of this § 1.1445–5(c)(3) shall not apply to any partnership or trust interests in which are regularly traded on an established securities market except as described in § 1.1445–8(c)(1). The rules of this § 1.1445–5(c)(3) shall not apply to any real estate investment trust. See § 1445–8.

(ii) *Amount to be withheld.* A partnership or trust electing to withhold under this § 1.1445–5(c)(3) shall withhold from each distribution to a foreign person an amount equal to 35 percent (or the highest rate specified in section 1445(e)(1)) of the amount attributable to section 1445(e)(1) transfers.

(iii) *Amounts attributable to section 1445(e)(1) transfers.* A distribution is attributable to section 1445(e)(1) transfers to the extent of the partner's or beneficiary's proportionate share of the current balance of the entity's section 1445(e)(1) account. A distribution from a partnership or trust that has made an election under this § 1.1445–5(c)(3) shall be deemed first to be attributable to a section 1445(e)(1) transfer to the extent of the balance in the section 1445(e)(1) account. An entity's section 1445(e)(1) account shall be equal to—

(A) The total amount of net gain realized by the entity upon all transfers of U.S. real property interests carried out by the entity after the date of its election under this § 1.1445–5(c)(3); minus

(B) The total amount of all distributions by the entity to domestic and foreign distributees from such account.

(iv) *Special rules for entities that make recurring sales of growing crops and timber.* An entity that makes an election under § 1.1445–5(c)(3) and that makes recurring sales of growing crops and timber may further elect to determine the amount subject to withholding under the rules of this § 1.1445–5(c)(3)(iv). Such an entity must withhold from each distribution to a foreign partner or beneficiary an amount equal to 10 percent of such partner's or beneficiary's proportionate share of the current balance of the entity's gross section 1445(e)(1) account. An entity's gross section 1445(e)(1) account equals—

(A) The total amount realized by the entity upon all transfers of U.S. real property interests carried out by the entity after the date of its election under this § 1.1445–5(c)(3)(iv); minus

(B) The total amount of all distributions to domestic and foreign distributees from such account.

An entity that elects to compute the amount subject to withholding under this § 1.1445–5(c)(3)(iv), shall make such election in accordance with § 1.1445–5(c)(3)(vi) and shall be subject to the provisions otherwise applicable under § 1.1445–5(c)(3).

(v) *Procedural rules.* An election under paragraph (c)(3) may be made by filing a notice thereof with the Director, Philadelphia Service Center, at the address provided in § 1.1445–1(g)(10). The notice must be submitted by a general partner (in the case of a partnership) or the trustee or equivalent fiduciary (in the case of a trust). The notice must set forth the name, office address, and identifying number of the partnership or fiduciary making the election, and, in the case of a partnership, must include the name, office address, and identifying number of the general partner submitting the election. An election under this paragraph (c)(3) may be revoked only with the consent of the Internal Revenue Service. Consent of the Service may be requested by filing an application to revoke the election with the Director, Philadelphia Service Center at the address stated above. This application must include all information provided to the Service with the election notice and must provide an explanation of the reasons for revoking the election. The application to revoke an election must also specify

the amount remaining to be distributed in the section 1445(e)(1) account or the gross section 1445(e)(1) account.

An entity that ceases to qualify under section 1.1445–5(c)(3) because such entity does not have more than 100 partners or beneficiaries may revoke its election only with the consent of the Internal Revenue Service.

(d) *Distributions of U.S. real property interests by foreign corporations*—(1) *In general.* A foreign corporation that distributes a U.S. real property interest must deduct and withhold a tax equal to 35 percent (or the rate specified in section 1445(e)(2)) of the amount of gain recognized by the corporation on the distribution. The amount of gain required to be recognized by the corporation must be determined pursuant to the rules of section 897 and any other applicable section. For special rules concerning the applicability of a nonrecognition provision to a distribution, see paragraph (b)(2) of this section. The withholding liability imposed by this paragraph (d) applies to the same taxpayer that owes the related substantive income tax liability pursuant to the operation of section 897. Only one such liability will be assessed and collected from a foreign corporation, but separate penalties for failures to comply with the two requirements will be asserted.

(2) *Withholding not required*—(i) *Property distributed not a U.S. real property interest*—(A) *In general.* No withholding is required under this paragraph (d) if a foreign corporation that distributes property determines pursuant to the rules of paragraph (b)(3) of this section that the property distributed is not a U.S. real property interest.

(B) *Belated notice of false statement.* If after the date of a distribution described in paragraph (d)(1) of this section a foreign corporation learns that another corporation's statement (that an interest in that other corporation is not a U.S. real property interest) is false, then the foreign corporation may not rely upon that statement for any purpose. Such a foreign corporation's withholding obligations under this paragraph (d) shall apply if a statement had never been given, and such a corporation may be held fully liable pursuant to § 1.1445–5(b)(5) for any failure to withhold. Amounts withheld pursuant to the rule of this paragraph (d)(2)(i)(B) must be reported and paid over by the 60th day following the date on which the foreign corporation learns that the statement is false. No penalties or interest will be assessed for failures to withhold prior to that date. For rules concerning the notifications of false statements that may be required to be given to foreign corporations, see § 1.1445–4(b).

(ii) *Withholding certificate.* No withholding is required under this paragraph (d) with respect to a foreign corporation's distribution of a U.S. real property interest if the distributing corporation obtains a withholding certificate from the Internal Revenue Service that so provides. For rules concerning the issuance of withholding certificates, see § 1.1445–6.

(e) *Distributions to foreign persons by U.S. real property holding corporations*—(1) *In general.* A domestic corporation that distributes any property to a foreign person that holds an interest in the corporation must deduct and withhold a tax equal to 10 percent of the fair market value of the property distributed to the foreign person, if—

(i) The foreign person's interest in the corporation constitutes a U.S. real property interest under the provisions of section 897 and regulations thereunder; and

(ii) There is a distribution of property in redemption of stock treated as an exchange under section 302(a), in liquidation of the corporation pursuant to the provisions of Part II of subchapter C of the Internal Revenue Code (sections 331 through section 346), or with respect to stock under section 301 that is not made out of earnings and profits of the corporation.

(2) *Coordination rules for Section 301 distributions.* If a domestic corporation makes a distribution of property under section 301 to a foreign person whose interest in such corporation constitutes a U.S. real property interest under the provisions of section 897 and the regulations thereunder, then see § 1.1441–3(c)(4) for rules coordinating withholding obligations under sections 1445 and 1441 (or 1442 or 1443)).

(3) *Withholding not required*—(i) *Foreign person's interest not a U.S. real property interest.* Withholding is required under this paragraph (e) only with respect to distributions to foreign persons holding interests in the corporation that constitute U.S. real property interests. In general, a foreign person's interest in a domestic corporation constitutes a U.S. real property interest if the corporation was a U.S real property holding corporation at any time during the shorter of (A) the period in which the foreign person held the interest or (B) the previous five years (but not earlier than June 19, 1980). See section 897(c) and §§ 1.897–1(c) and 1.897–2 (b) and (h). However, an interest in such a corporation ceases to be a U.S. real property interest after all of the U.S. real property interests held by the corporation itself are disposed of in transactions on which gain or loss is recognized. See section 897(c)(1)(B) and §1.897–2(f)(2). Thus, if a U.S. real property holding corporation in the process of liquidation does not elect section 337 nonrecognition treatment upon its sale of all U.S. real property interests held by the corporation, and recognizes gain or loss upon such sales, interests in that corporation cease to be U.S. real property interests. Therefore, no withholding would be required with respect to that corporation's subsequent liquidating distribution to a foreign shareholder of property other than a U.S. real property interest.

(ii) *Nonrecognition transactions.* For special rules concerning the applicability of a nonrecognition provision to a distribution described in paragraph (e)(1) of this section, see paragraph (b)(2) of this section.

(iii) *Interest-holder not a foreign person*—(A) *In general.* A domestic corporation shall not be required to withhold under this paragraph (e) with respect to a distribution of property to any distributee that it determines, pursuant to the rules of paragraph (b)(3) of this section, not to be a foreign person.

(B) *Belated notice of false certification.* If after the date of a distribution described in paragraph (e)(1) of this section a domestic corporation learns that an interest-holder's certification of non-foreign status is false, then the corporation may rely upon that certification only if the person providing the false certification holds (or held) less than 10 percent of the value of the outstanding stock of the corporation. With respect to less than 10 percent interest-holders, no withholding is required under this paragraph (e) upon receipt of a belated notice of false certification. With respect to 10 percent or greater interest-holders, the corporation's withholding obligations under this paragraph (e) shall apply as if a certification had never been given, and such a corporation may be held fully liable pursuant to §1.1445–5(b)(6) for any failure to withhold as of the date specified in this §1.1445–5(e)(3)(iii)(B). Amounts withheld pursuant to the rule of this paragraph (e)(3)(iii)(B) must be reported and paid over by the 60th day following the date on which the corporation learns that the certification is false. No penalties or interest for failures to withhold will be assessed prior to that date. For rules concerning the notifications of false certifications that may be required to be given to U.S. real property holding corporations, see §1.1445–4(b).

(iv) *Withholding certificate.* No withholding, or reduced withholding, is required under this paragraph (e) with respect to a domestic corporation's distribution of property if the distributing corporation obtains a withholding certificate from the Internal Revenue Service that so provides. For rules concerning the issuance of withholding certificates, see §1.1445–6.

(f) *Taxable distributions by domestic or foreign partnerships, trusts, or estates.* [Reserved]

(g) *Dispositions of interests in partnerships, trusts, and estates.* [Reserved]

(h) *Effective date for taxpayer identification numbers.* The requirement in paragraphs (b)(2)(ii)(B) and (C) of this section that taxpayer identification numbers be provided (in all cases) is applicable for dispositions of U.S. real property interests occurring after November 3, 2003.

[T.D. 8113, 51 FR 46642, Dec. 24, 1986; 52 FR 3796, 3917, Feb. 6, 1987, as amended at T.D. 8198, 53 FR 16230, May 5, 1988; T.D. 8321, 55 FR 50553, Dec. 7, 1990; T.D. 8647, 60 FR 66076, Dec. 21, 1995; 61 FR 7157, Feb. 26, 1996; T.D. 8734, 62 FR 53467, Oct. 14, 1997; T.D. 9082, 68 FR 46086, Aug. 5, 2003]

§ 1.1445–6 Adjustments pursuant to withholding certificate of amount required to be withheld under section 1445(e).

(a) *Withholding certificate for purposes of section 1445(e)*—(1) *In general.* Pursuant to the provisions of § 1.1445–5 (c)(2)(iv), (d)(2)(ii), and (e)(2)(iv), withholding under section 1445(e) may be reduced or eliminated pursuant to a withholding certificate issued by the Internal Revenue Service in accordance with the rules of this § 1.1445–6. A withholding certificate may be issued in cases where adjusted withholding is appropriate (e.g., because of the applicability of a nonrecognition provision—see paragraph (c) of this section), where the relevant taxpayers are exempt from U.S. tax (see paragraph (d) of this section), or where an agreement for the payment of tax is entered into with the Service (see paragraph (e) of this section). A withholding certificate that is obtained prior to a transfer allows the entity or fiduciary to withhold a reduced amount or excuses withholding entirely. A withholding certificate that is obtained after a transfer has been made may authorize a normal refund or an early refund pursuant to paragraph (g) of this section. The Internal Revenue Service will act upon an application for a withholding certificate not later than the 90th day after it is received. (The Service may deny a request for a withholding certificate where, after due notice, an applicant fails to provide the information necessary to make a determination.) Solely for this purpose (i.e., determining the day upon which the 90 day period commences), an application is received by the Service on the date when all information necessary for the Service to make a determination is provided by the applicant. In no event, however, will a withholding certificate be issued without the transferor's identifying number. (For rules regarding whether an application has been timely submitted, see § 1.1445–5(b)(5)). The Internal Revenue Service will act upon an application for an early refund not later than the 90th day after it is received. An application for an early refund must either (i) include a copy of a withholding certificate issued by the Service with respect to the transaction, or (ii) be combined with an application for a withholding certificate. Where an application for an early refund is combined with an application for a withholding certificate, the Service will act upon both applications not later than the 90th day after receipt. Either an entity, a fiduciary, or a relevant taxpayer (as defined in paragraph (a)(2) of this section) may apply for a withholding certificate. An entity or fiduciary may apply for a withholding certificate with respect to all or less than all relevant taxpayers. For special rules concerning the issuance of a withholding certificate to a foreign corporation that has made an election under section 897(i), see § 1.1445–7(d).

(2) *Relevant taxpayer.* For purposes of this section, the term ''relevant taxpayer'' means any foreign person that will bear substantive income tax liability by reason of the operation of section 897 with respect to a transaction upon which withholding is required under section 1445(e).

(b) *Applications for withholding certificates*—(1) *In general.* An application for a withholding certificate pursuant to this § 1.1445–6 must be submitted in the manner provided in § 1.1445—3 (b). However, in lieu of the information required to be submitted pursuant to § 1.1445–3(b)(4), the applicant must provide the information required by paragraph (b)(2) of this section. In addition, the information required by paragraph (b)(3) of this section must be submitted with the application.

(2) *Basis for certificate*—(i) *Adjusted withholding.* If a withholding certificate is sought on the basis of a claim that adjusted withholding is appropriate, the application must include a calculation, in accordance with paragraph (c) of this section, of the maximum tax that may be imposed on each relevant taxpayer with respect to which adjusted withholding is sought. The application must also include all evidence necessary to substantiate the claimed calculation, such as records of adjustments to basis or appraisals of fair market value.

(ii) *Exemption.* If a withholding certificate is sought on the basis of a relevant taxpayer's exemption from U.S. tax, the application must set forth a brief statement of the law and facts

that support the claimed exemption. See paragraph (d) of this section.

(iii) *Agreement.* If a withholding certificate is sought on the basis of an agreement for the payment of tax, the application must include a copy of the agreement proposed by the applicant and a copy of the security instrument (if any) proposed by the applicant. In this regard, see paragraph (e) of this section.

(3) *Relevant taxpayers.* An application for withholding certificate pursuant to this section must include all of the following information: the name, identifying number, and home address (in the case of an individual) or office address (in the case of an entity) of each relevant taxpayer with respect to which adjusted withholding is sought.

(c) *Adjustment of amount required to be withheld.* The Internal Revenue Service may issue a withhold certificate that excuses withholding or that permits an entity or fiduciary to withhold an adjusted amount reflecting the relevant taxpayers' maximum tax liability. A relevant taxpayer's maximum tax liability is the maximum amount which that taxpayer could be required to pay as tax by reason of the transaction upon which withholding is required. In the case of an individual taxpayer that amount will generally be the gain realized by the individual, multiplied by the maximum individual income tax rate applicable to long term capital gain. In the case of a corporate taxpayer, that amount will generally be the gain realized by the corporation, multiplied by the maximum corporate income tax rate applicable to long term capital gain. However, that amount must be adjusted to take into account the following:

(1) Any reduction of tax to which the relevant taxpayer is entitled under the provisions of a U.S. income tax treaty;

(2) The effect of any nonrecognition provision that is applicable to the transaction;

(3) Any losses previously realized and recognized by the relevant taxpayer during the taxable year by reason of the operation of section 897;

(4) Any amount realized upon the subject transfer by the relevant taxpayer that is required to be treated as ordinary income under any provision of the Code; and

(5) Any other factor that may increase or reduce the tax upon the transaction.

(d) *Relevant taxpayer's exemption from U.S. tax*—(1) *In general.* The Internal Revenue Service will issue a withholding certificate that excuses withholding by an entity or fiduciary if it is established that a relevant taxpayer's income from the transaction will be exempt from U.S. tax. For the available exemptions, see paragraph (d)(2) of this section. If a relevant taxpayer is entitled to a reduction of (rather than an exemption from) U.S. tax, then the entity or fiduciary may obtain a withholding certificate to that effect pursuant to the provisions of paragraph (c) of this section.

(2) *Available exemptions.* A relevant taxpayer's income from a transaction with respect to which withholding is required under section 1445(e) may be exempt from U.S. tax because either:

(i) The relevant taxpayer is an integral part or controlled entity of a foreign government and the subject income is exempt from U.S. tax pursuant to section 892 and the regulations thereunder; or

(ii) The relevant taxpayer is entitled to the benefits of an income tax treaty that provides for such an exemption (subject to the limitations imposed by section 1125(c) of Pub. L. 96–499, which, in general overrides such benefits as of January 1, 1985).

(e) *Agreement for the payment of tax*—(1) *In general.* The Internal Revenue Service will issue a withholding certificate that excuses withholding or that permits an entity or fiduciary to withhold a reduced amount, if the entity, fiduciary, or a relevant taxpayer enters into an agreement for the payment of tax pursuant to the provisions of this paragraph (e). An agreement for the payment of tax is a contract between the Service and the entity, fiduciary, or relevant taxpayer that consists of two necessary elements. Those elements are—

(i) A contract between the Service and the other person, setting forth in detail the rights and obligations of each; and

(ii) A security instrument or other form of security acceptable to the Assistant Commissioner (International).

(2) *Contents of agreement*—(i) *In general.* An agreement for the payment of tax must cover an amount described in subdivision (ii) or (iii) of this paragraph (e)(2). The agreement may either provide adequate security for the payment of the chosen amount with respect to the relevant taxpayer in accordance with paragraph (e)(3) of this section or provide for the payment of that amount through a combination of security and withholding of tax by the entity or fiduciary.

(ii) *Tax that would otherwise be withheld.* An agreement for the payment of tax may cover the amount of tax that would otherwise be required to be withheld with respect to the relevant taxpayer pursuant to section 1445(e). In addition to the amount computed pursuant to section 1445(e), the applicant must agree to pay interest upon that amount, at the rate established under section 6621, with respect to the period between the date on which withholding tax under section 1445(e) would otherwise be due and the date on which the relevant taxpayer's payment of tax with respect to the disposition will be due. The amount of interest agreed upon must be paid by the applicant regardless of whether or not the Service is required to draw upon any security provided pursuant to the agreement. The interest may be paid either with the return or by the Service drawing upon the security.

(iii) *Maximum tax liability.* An agreement for the payment of tax may cover the relevant taxpayer's maximum tax liability, determined in accordance with paragraph (c) of this section. The agreement must also provide for the payment of an additional amount equal to 25 percent of the amount determined under paragraph (c) of this section. This additional amount secures the interest and penalties that would accrue between the date of the relevant taxpayer's failure to file a return and pay tax with respect to the disposition, and the date of which the Service collects upon that liability pursuant to the agreement.

(iv) *Allocation of payment.* An agreement for the payment of tax pursuant to this section must set forth an allocation of the payment provided for by the agreement among the relevant taxpayers with respect to which the withholding certificate is sought. In the case of an agreement that covers an amount described in subdivision (ii) of this paragraph (e)(2), such allocation must be based upon the amount that would otherwise be required to be withheld with respect to each relevant taxpayer. In the case of an agreement that covers an amount described in subdivision (iii) of this paragraph (e)(2), such allocation must be based upon each relevant taxpayer's maximum tax liability.

(3) *Major types of security.* The major types of security that are acceptable to the Internal Revenue Service for purposes of this section are described in § 1.1445–3(e)(3).

(4) *Terms of security instrument.* Any security instrument that is furnished pursuant to this section must contain the terms described in § 1.1445–3(e)(4).

(f) *Amendments to application for withholding certificates*—(1) *In general.* An applicant for a withholding certificate may amend an otherwise complete application by submitting an amending statement to the Director, Philadelphia Service Center at the address provided in § 1.1445–1(g)(10). The amending statement shall provide the information required by § 1.1445–6(f)(3) and must be signed and accompanied by a penalties of perjury statement in accordance with § 1.1445–6(b).

(2) *Extension of time for the Service to process requests for withholding certificates*—(i) *In general.* If an amending statement is submitted, the time in which the Internal Revenue Service must act upon the amended application shall be extended by 30 days.

(ii) *Substantial amendments.* If an amending statement is submitted and the Service finds that the statement substantially amends to the facts of the underlying application or substantially alters the terms of the withholding certificate as requested in the initial application, the time within which the Service must act upon the amended application shall be extended by 60 days. The applicant shall be so notified.

(iii) *Amending statement received after the requested withholding certificate has been signed by the Director, Philadelphia Service Center.* If an amending statement is received after the withholding certificate, drafted in response to the underlying application, has been signed by the Director, Philadelphia Service Center or his delegate and prior to the day such certificate is mailed to the applicant, the time in which the Service must act upon the amended application shall be extended by 90 days.

(3) *Information required to be submitted.* No particular form is required for an amending statement but the statement must provide the following information:

(i) *Identification of applicant.* The amending statement must set forth the name, address, and identifying number of the person submitting the amending statement.

(ii) *Date of application.* The amending statement must set forth the date of the underlying application for a withholding certificate.

(iii) *Real property interest to be (or that has been) transferred.* The amending statement must set forth a brief description of the real property interest with respect to which the underlying application for a withholding certificate was submitted.

(iv) *Amending information.* The amending statement must fully set forth the basis for the amendment including any modification of the facts supporting the application for a withholding certificate and any change sought in the terms of the withholding certificate.

(g) *Early refund of overwithheld amounts.* If the Internal Revenue Service issues a withholding certificate pursuant to this section, and an amount greater than that specified in the certificate was withheld by the entity or fiduciary, then pursuant to the rules of this paragraph (g) a relevant taxpayer may apply for an early refund of a proportionate share of the excess amount (without interest) prior to the date on which the relevant taxpayer's return is due (without extensions). An application for an early refund must be addressed to the Director, Philadelphia Service Center, at the address provided in § 1.1445–1(g)(10). No particular form is required for the application, but the following information must be set forth in separate paragraphs numbered to correspond with the numbers given below:

(1) Name, address, and identifying number of the relevant taxpayer seeking the refund;

(2) Amount required to be withheld pursuant to withholding certificate;

(3) Amount withheld by entity or fiduciary (attach a copy of Form 8288–A stamped by IRS pursuant to § 1.1445–5(b)(4) or provide substantial evidence of the amount withheld in the case of a failure to receive Form 8288–A, as provided in § 1.1445–5(b)(7)); and

(4) Amount to be refunded to the relevant taxpayer.

An application for an early refund cannot be processed unless the required copy of Form 8288–A or substantial evidence of the amount withheld in the case of a failure to receive Form 8288–A (as provided in § 1.1445–5(b)(7)) is attached to the application. If an application for a withholding certificate is submitted after the transfer takes place, then that application may be combined with an application for an early refund. The Service will act upon a claim for refund within the time limits set forth in § 1.1445–6(a)(1).

(h) *Effective date for taxpayer identification numbers.* The requirement in paragraphs (b)(3), (f)(3)(i), and (g)(1) of this section that taxpayer identification numbers be provided (in all cases) is applicable for dispositions of U.S. real property interests occurring after November 3, 2003.

[T.D. 8113, 51 FR 46648, Dec. 24, 1986; 52 FR 3796, 3917, Feb. 6, 1987; T.D. 9082, 68 FR 46086, Aug. 5, 2003]

§ 1.1445–7 Treatment of foreign corporation that has made an election under section 897(i) to be treated as a domestic corporation.

(a) *In general.* Pursuant to section 897(i) a foreign corporation may elect to be treated as a domestic corporation for purposes of sections 897 and 6039C. A foreign corporation that has made such an election shall also be treated as a domestic corporation for purposes of the withholding required under section 1445, in accordance with the provisions of this section.

(b) *Withholding under section 1445(a)*—(1) *Dispositions by corporation.* A foreign corporation that has made an election under section 897(i) may provide a transferee with a certification of nonforeign status in connection with the corporation's disposition of a U.S. real property interest. However, in accordance with the provisions of §§ 1.1445–2(b)(2)(ii) and 1.1445–5(b)(3)(ii)(C), such an electing foreign corporation must attach to such certification a copy of the acknowledgment of the election provided to the corporation by the Internal Revenue Service pursuant to § 1.897–3(d)(4) which states that the information required by § 1.897–3 has been determined to be complete.

(2) *Dispositions of interests in corporation.* Dispositions of interests in electing foreign corporations shall be subject to the withholding requirements of section 1445(a) and the rules of §§ 1.1445–1 through 1.1445–4. Therefore, if a foreign person disposes of an interest in such a corporation, and that interest is a U.S. real property interest under the provisions of section 897 and regulations thereunder, then the transferee is required to withhold under section 1445(a).

(c) *Withholding under section 1445(e).* Because a foreign corporation that has made an election under section 897(i) is treated as a domestic corporation for purposes of determining withholding obligations under section 1445, such a corporation is not subject to the requirement of section 1445(e)(2) that a foreign corporation withhold at the corporate capital gain rate from the gain recognized upon the distribution of a U.S. real property interest. Such a corporation is subject to the provisions of section 1445(e)(3). Thus, if interests in an electing corporation constitute U.S. real property interests, then the corporation is required to withhold with respect to the non-dividend distribution of any property to an interest-holder that is a foreign person. See § 1.1445–5(e). Dividend distributions (distributions that are described in section 301) shall be treated as provided in sections 897(f), 1441 and 1442. In addition, if interests in an electing foreign corporation do not constitute U.S. real property interests, then distributions by such corporation shall be treated as provided in sections 897(f) (if applicable), 1441 and 1442.

(Approved by the Office of Management and Budget under control number 545–0902)

[T.D. 8113, 51 FR 46650, Dec. 24, 1986; 52 FR 3796, Feb. 6, 1987]

§ 1.1445–8 Special rules regarding publicly traded partnerships, publicly traded trusts and real estate investment trusts (REITs).

(a) *Entities to which this section applies.* The rules of this section apply to—

(1) Any partnership or trust, interests in which are regularly traded on an established securities market (regardless of the number of its partners or beneficiaries), and

(2) Any REIT (regardless of the form of its organization).

For purposes of paragraph (a)(1) of this section, the rules of section 1445 (e)(1) and this section shall not apply to a publicly traded partnership (as defined in section 7704) which is treated as a corporation under section 7704(a), or to those entities that are classified as ''associations'' and taxed as corporations. See § 301.7701–2.

(b) *Obligation to withhold*—(1) *In general.* An entity described in paragraph (a) of this section is not required to withhold under the provisions of § 1.1445–5(c), which states the withholding requirements of domestic partnerships, trusts and estates upon the disposition of U.S. real property interests. Except as otherwise provided in this paragraph (b), an entity described in paragraph (a) of this section shall be liable to withhold tax upon the distribution of any amount attributable to the disposition of a U.S. real property interest, with respect to each holder of an interest in the entity that is a foreign person. The amount to be withhold is described in paragraph (c) of this section.

(2) *Publicly traded partnerships.* Publicly traded partnerships which comply with the withholding procedures under section 1446 will be deemed to have satisfied their withholding obligations under this paragraph (b).

(3) *Special rule for certain distributions to nominees.* In the case of a person that—

(i) Is a nominee (as defined in paragraph (d) of this section),

(ii) Receives a distribution attributable to the disposition of a U.S. real property interest directly from an entity described in paragraph (a) of this section or indirectly from such entity through a nominee,

(iii) Receives the distribution for payment to any foreign person, or the account of any foreign person, and

(iv) Receives a qualified notice pursuant to paragraph (f) of this section,

then the obligation to withhold in accordance with the general rules of section 1445(e)(1) and this paragraph (b) shall be imposed solely on that person to the extent of the amount specified by the qualified notice. A person obligated to withhold by reason of this paragraph (b)(3) is referred to as a withholding agent.

(4) *Person designated to act for withholding agent.* The rules stated in §1.1441–7(b) (1) and (2) regarding a person designated to act for a withholding agent shall apply for purposes of this section.

(5) *Effect of withholding exemption granted under §1.1441–4(f).* A letter issued by a district director under the provisions of §1.1441–4(f), which exempts a person from withholding under section 1441 or section 1442, shall also exempt that person from withholding under this paragraph (b), if—

(i) The letter identifies another person as the withholding agent for purposes of section 1441 or 1442, and

(ii) Such other person enters into a written agreement, with the district director who issued the letter, to be the withholding agent for purposes of this paragraph (b).

The exemption granted, and the corresponding withholding obligation imposed, by this paragraph (b)(5) shall apply with respect to the first distribution made after execution of the agreement described in the preceding sentence and shall continue to apply to all distributions made during the period in which the exemption granted under §1.1441–4(f) is in effect.

(6) *Payment other than in money.* The rule stated in §1.1441–7(c) regarding payment other than in money shall apply for purposes of this section.

(c) *Amount to be withheld*—(1) *Distribution from a publicly traded partnership or publicly traded trust.* The amount to be withheld under this section with respect to a distribution by a publicly traded partnership or publicly traded trust shall be computed in the manner described in §1.1445–5(c)(3) (ii) and (iii), subject to the rules of this section.

(2) *REITs*—(i) *In general.* The amount to be withheld with respect to a distribution by a REIT, under this section shall be equal to 35 percent (or the highest rate specified in section 1445(e)(1)) of the amount described in paragraph (c)(2)(ii) of this section.

(ii) *Amount subject to withholding*—(A) *In general.* Except as otherwise provided in paragraph (c)(2)(ii)(C) of this section, the amount subject to withholding is the amount of any distribution, determined with respect to each share or certificate of beneficial interest, designated by a REIT as a capital gain dividend, multiplied by the number of shares or certificates of beneficial interest owned by the foreign person. Solely for purposes of this paragraph, the largest amount of any distribution occurring after March 7, 1991 that could be designated as a capital gain dividend under section 857(b)(3)(C) shall be deemed to have been designated by a REIT as a capital gain dividend regardless of the amount actually designated.

(B) *Distribution attributable to net short-term capital gain from the disposition of a U.S. real property interest.* [Reserved]

(C) *Designation of prior distribution as capital gain dividend.* If a REIT makes an actual designation of a prior distribution, in whole or in part, as a capital gain dividend, such prior distribution shall not be subject to withholding under this section. Rather, a REIT must characterize and treat as a capital gain dividend distribution (solely for purposes of section 1445(e)(1)) each distribution, determined with respect to each share or certificate of beneficial interest, made on the day of, or any time subsequent to, such designation as a capital gain dividend until such characterized amounts equal the amount of the prior distribution designated as a capital gain dividend. The provisions of this paragraph shall not

be applicable in any taxable year in which the REIT adopts a formal or informal resolution or plan of complete liquidation.

(iii) *Example.* The following example illustrates the rules of paragraph (c)(2)(ii)(C) of this section.

In the first quarter of 1988, XYZ REIT makes a dividend distribution of $2X. In the second quarter of 1988, XYZ sells real property, recognizing a long term capital gain of $15X, and makes a dividend distribution of $5X. In the third quarter of 1988, XYZ makes a distribution of $3X. In the fourth quarter of 1988, XYZ sells real property recognizing a long term capital loss of $2X. Within 30 days after the close of the taxable year, XYZ designates a capital gain dividend for the year of $13X. It subsequently makes a fourth quarter distribution of $7X. Since XYZ has made an actual designation of prior distributions during the taxable year as capital gain dividends, withholding on those prior distributions will not be required. However, the REIT must characterize, solely for purposes of section 1445(e)(1), a total amount of $13X of dividend distributions as capital gain dividends. Therefore, the fourth quarter dividend distribution of $7X must be characterized as a capital gain dividend subject to withholding under this section. In addition, XYZ will be required to characterize an additional $6X of subsequent dividend distributions as capital gain dividends.

(d) *Definition of nominee.* For purposes of this section, the term ''nominee'' means a domestic person that holds an interest in an entity described in paragraph (a) of this section on behalf of another domestic or foreign person.

(e) *Determination of non-foreign status by withholding agent.* A withholding agent may rely on a certificate of non-foreign status pursuant to §1.1445–2(b) or on the statements and address provided to it on Form W–9 or a form that is substantailly similar to such form, to determine whether an interest holder is a domestic person. Reliance on these documents will excuse the withholding agent from liability imposed under section 1445(e)(1) in the absence of actual knowledge that the interest holder is a foreign person. A withholding agent may also employ other means to determine the status of an interest holder, but, if the agent relies on such other means and the interest holder proves, in fact, to be a foreign person, then the withholding agent is subject to any liability imposed pursuant to section 1445 and the regulations thereunder for failure to withhold.

(f) *Qualified notice.* A qualified notice for purposes of paragraph (b)(3)(iv) of this section is a notice given by a partnership, trust or REIT regarding a distribution that is attributable to the disposition of a U.S. real property interest in accordance with the notice requirements with respect to dividends described in 17 CFR 240.10b–17(b) (1) or (3) issued pursuant to the Securities Exchange Act of 1934, 15 U.S.C. 78a *et seq.* In the case of a REIT, a qualified notice is only a notice of a distribution, all or any portion of which the REIT actually designates, or characterizes in accordance with paragraph (c)(2)(ii)(C) of this section, as a capital gain dividend in accordance with 17 CFR 240.10b–17(b) (1) or (3), with respect to each share or certificate of beneficial interest. A deemed designation under paragraph (c)(2)(ii)(A) of this section may not be the subject of a qualified notice under this paragraph (f). A person described in paragraph (b)(3) of this section shall be treated as receiving a qualified notice at the time such notice is published in accordance wtih 17 CFR 240.10b–17(b) (1) or (3).

(g) *Reporting and paying over withheld amounts.* With respect to an amount withheld under this section, a withholding agent is not required to conform to the requirements of §1.1445–5(b)(5) but is required to report and pay over to the Internal Revenue Service any amount required to be withheld pursuant to the rules and procedures of section 1461, the regulations thereunder and §1.6302–2. Forms 1042 and 1042S are to be used for this purpose.

(h) *Early refund procedure not available.* The early refund procedure set forth in §1.1445–6(g) shall not apply to amounts withheld under the rules of this section. For adjustment of overwithheld amounts, see §1.1461.4.

(i) *Liability upon failure to withhold.* For rules regarding liability upon failure to withhold under §1445(e) and this section, see §1.1445–1(e).

[T.D. 8321, 55 FR 50553, Dec. 7, 1990; 56 FR 4542, Feb. 5, 1991, as amended by T.D. 8647, 60 FR 66077, Dec. 21, 1995]

§ 1.1445–10T Special rule for Foreign governments (temporary).

(a) This section provides a temporary regulation that, if and when adopted as a final regulation will add a new paragraph (d)(6) to § 1.1445–2. Paragraph (b) of this section would then appear as paragraph (d)(6) of § 1.1445–2.

(b) *Foreign government*—(1) *As transferor.* A foreign government is subject to U.S. taxation under section 897 on the disposition of a U.S. real property interest except to the extent specifically otherwise provided in the regulations issued under section 892. A foreign government that disposes of a U.S. real property interest that is not subject to taxation as specifically provided by the regulations under section 892 may present a notice of nonrecognition treatment pursuant to paragraph (d)(2) of this section that specifically cites the provision of such regulation, and thereby avoids withholding by the transferee of the property. A foreign government that disposes of a U.S. real property interest or the transferee of the property may obtain a withholding certificate from the Internal Revenue Service that confirms the applicability of section 892, but neither is required to do so. Rules concerning the issuance of withholding certificates are provided in § 1.1445–3.

(2) *As transferee.* A foreign government or international organization that acquires a U.S. real property interest is fully subject to section 1445 and the regulations thereunder. Therefore, such an entity is required to withhold tax upon the acquisition of a U.S. real property interest from a foreign person.

(c) *Effective date.* The rules of this section shall be effective for transfers, exchanges, distributions and other dispositions occuring on or after June 6, 1988.

[T.D. 8198, 53 FR 16230, May 5, 1988]

§ 1.1445–11T Special rules requiring withholding under § 1.1445–5 (temporary).

(a) *Purpose and scope.* This section provides temporary regulations that, if and when adopted as a final regulation will add certain new paragraphs within § 1.1445–5 (b) and (c). The paragraphs of this section would then appear as set forth below. Paragraph (b) of this section would then appear as paragraph (b)(8)(v) of § 1.1445–5. Paragraph (c) of this section would then appear as paragraph (c)(2)(i) of § 1.1445–5. Paragraph (d) of this section would then appear as paragraph (g) of § 1.1445–5.

(b) *Dispositions of interests in partnerships, trusts, and estates.* The provisions of section 1445(e)(5), requiring withholding upon certain dispositions of interests in partnerships, trusts, and estates, that own directly or indirectly a U.S. real property interest shall apply to dispositions on or after the effective date of a later Treasury decision under section 897(g) of the Code except in the case of dispositions of interests in partnerships in which fifty percent of the value of the gross assets consist of U.S. real property interests and ninety percent or more of the value of the gross assets consist of U.S. real property interests plus any cash or cash equivalents. The provisions of section 1445(e)(5), shall apply, however, to dispositions after June 6, 1988, of interests in partnerships in which fifty percent or more of the value of the gross assets consist of U.S. real property interests, and ninety percent or more of the value of the gross assets consist of U.S. real property interests plus any cash or cash equivalents. See paragraph (d) of this section.

(c) *Transactions covered elsewhere.* No withholding is required under this paragraph (c) with respect to the distribution of a U.S. real property interest by a partnership, trust, or estate. Such distributions shall be subject to withholding under section 1445(e)(4) and paragraph (f) of this § 1.1445–5 on the effective date of a later Treasury decision published under section 897(g) of the Code. No withholding is required at this time for distributions described in the preceding sentence. See paragraph (b)(8)(iv) of this § 1.1445–5. No withholding is required under this paragraph with respect to the disposition of an interest in a trust, estate, or partnership except in the case of a partnership in which fifty percent or more of the value of the gross assets consist of U.S. real property interests, and ninety percent or more of the value of the gross assets consist of U.S. real property interests plus any cash or

cash equivalents. See paragraph (b)(8)(v) of § 1.1445–5. Withholding shall be required as provided in section 1445(e)(5) and paragraph (g) of this section with respect to the disposition after June 6, 1988, of an interest in a partnership in which fifty percent or more of the value of the gross assets consist of U.S. real property interests, and ninety percent or more of the value of the gross assets consist of U.S. real property interests plus any cash or cash equivalents.

(d) *Dispositions of interests in partnerships, trusts or estates*—(1) *Withholding required on disposition of certain partnership interests.* Withholding is required under section 1445(e)(5) and this paragraph with respect to the disposition by a foreign partner of an interest in a domestic or foreign partnership in which fifty percent or more of the value of the gross assets consist of U.S. real property interests, and ninety percent or more of the value of the gross assets consist of U.S. real property interests plus any cash or cash equivalents. For purposes of this paragraph cash equivalents mean any asset readily convertible into cash (whether or not denominated in U.S. dollars), including, but not limited to, bank accounts, certificates of deposit, money market accounts, commercial paper, U.S. and foreign treasury obligations and bonds, corporate obligations and bonds, precious metals or commodities, and publicly traded instruments. The taxpayer on filing an income tax return for the year of the disposition may demonstrate the extent to which the gain on the disposition of the interest is not attributable to U.S. real property interests. A taxpayer is also permitted by § 1.1445–3 to apply for a withholding certificate in instances where reduced withholding is approporiate.

(2) *Withholding not required*—(i) *Transferee receives statement that interest in partnership is not described in paragraph (d)(1).* No withholding is required under paragraph (d)(1) of this section upon the disposition of a partnership interest otherwise described in that paragraph if the transferee is provided a statement, issued by the partnership and signed by a general partner under penalties of perjury no earlier than 30 days before the transfer, certifying that fifty percent or more of the value of the gross assets does not consist of U.S. real property interests, or that ninety percent or more of the value of the gross assets of the partnership does not consist of U.S. real property interests plus cash or cash equivalents.

(ii) *Reliance on statement not permitted.* A transferee is not entitled to rely upon a statement described in paragraph (d)(2)(i) of this section if, prior to or at the time of the transfer, the transferee either—

(A) Has actual knowledge that the statement is false, or

(B) Receives a notice, pursuant to § 1.1445–4.

Such a transferee's withholding obligations shall apply as if the statement had never been given, and such a transferee may be held fully liable pursuant to § 1.1445–1(e) for any failure to withhold.

(iii) *Belated notice of false statement.* If, after the date of the transfer, a transferee receives notice that a statement provided under paragraph (d)(2)(i) of this section is false, then such transferee may rely on the statement only with respect to consideration that was paid prior to the receipt of the notice. Such a transferee is required to withhold a full 10 percent of the amount realized from the consideration that remains to be paid to the transferor. Thus, if 10 percent or more of the amount realized remains to be paid to the transferor, then the transferee is required to withhold and pay over the full 10 percent. The transferee must do so by withholding and paying over the entire amount of each successive payment of consideration to the transferor, until the full 10 percent of the amount realized has been withheld and paid over. Amounts so withheld must be reported and paid over by the 20th day following the date on which each such payment of consideration is made. A transferee that is subject to the rules of this § 1.1445–10T(d)(2)(iii) may not obtain a withholding certificate pursuant to § 1.1445–3, but must instead withhold and pay over the amounts required by this paragraph.

(e) *Effective date.* The rules of this section are effective for transactions after June 6, 1988.

[T.D. 8198, 53 FR 16231, May 5, 1988]

§ 1.1446–0 Table of contents.

This section lists the captions contained in §§ 1.1446–1 through 1.1446–7.

§ 1.1446–1 WITHHOLDING TAX ON FOREIGN PARTNERS' SHARE OF EFFECTIVELY CONNECTED TAXABLE INCOME.

(a) In general.
(b) Steps in determining 1446 tax obligation.
(c) Determining whether a partnership has a foreign partner.
(1) In general.
(2) Submission of Forms W–8BEN, W–8IMY, W–8ECI, W–8EXP, and W–9.
(i) In general.
(ii) Withholding certificate applicable to each type of partner.
(A) U.S. person.
(B) Nonresident alien.
(C) Foreign partnership.
(D) Disregarded entities.
(E) Domestic and foreign grantor trusts.
(F) Nominees.
(G) Foreign governments, foreign tax-exempt organizations and other foreign persons.
(H) Foreign corporations, certain foreign trusts, and foreign estates.
(iii) Effect of Forms W–8BEN, W–8IMY, W–8ECI, W–8EXP, W–9, and statement.
(A) Partnership reliance on withholding certificate.
(B) Reason to know.
(C) Subsequent knowledge and impact on penalties.
(iv) Requirements for certificates to be valid.
(A) When period of validity expires.
(B) Required information for Forms W–8BEN, W–8IMY, W–8ECI, and W–8EXP.
(v) Partner must provide new withholding certificate when there is a change in circumstances.
(vi) Partnership must retain withholding certificates.
(3) Presumptions in the absence of valid Form W–8BEN, Form W–8IMY, Form W–8ECI, Form W–8EXP, Form W–9, or statement.
(4) Consequences when partnership knows or has reason to know that Form W–8BEN, Form W–8IMY, Form W–8ECI, Form W–8EXP, or Form W–9 is incorrect or unreliable and does not withhold.
(5) Acceptable substitute form.

§ 1.1446–2 DETERMINING A PARTNERSHIP'S EFFECTIVELY CONNECTED TAXABLE INCOME ALLOCABLE TO FOREIGN PARTNERS UNDER SECTION 704.

(a) In general.
(b) Computation.
(1) In general.
(2) Income and gain rules.
(i) Application of the principles of section 864.
(ii) Income treated as effectively connected.
(iii) Exempt income.
(3) Deductions and losses.
(i) Oil and gas interests.
(ii) Charitable contributions.
(iii) Net operating losses and other suspended or carried losses.
(iv) Interest deductions.
(v) Limitation on capital losses.
(vi) Other deductions.
(vii) Limitations on deductions.
(4) Other rules.
(i) Exclusion of items allocated to U.S. partners.
(ii) Partnership credits.
(5) Examples.

§ 1.1446–3 TIME AND MANNER OF CALCULATING AND PAYING OVER THE 1446 TAX.

(a) In general.
(1) Calculating 1446 tax.
(2) Applicable percentage.
(i) In general.
(ii) Special types of income or gain.
(b) Installment payments.
(1) In general.
(2) Calculation.
(i) General application of the principles of section 6655.
(ii) Annualization methods.
(iii) Partner's estimated tax payments.
(iv) Partner whose interest terminates during the partnership's taxable year.
(v) Exceptions and modifications to the application of the principles under section 6655.
(A) Inapplicability of special rules for large corporations.
(B) Inapplicability of special rules regarding early refunds.
(C) Period of underpayment.
(D) Other taxes.
(E) 1446 tax treated as tax under section 11.
(F) Application of section 6655(f).
(G) Application of section 6655(i).
(H) Current year tax safe harbor.
(I) Prior year tax safe harbor.
(3) 1446 tax safe harbor.
(i) In general.
(ii) Permission to change to standard annualization method.
(c) Coordination with other withholding rules.
(1) Fixed or determinable, annual or periodical income.
(2) Real property gains.
(i) Domestic partnerships.
(ii) Foreign partnerships.
(3) Coordination with section 1443.
(d) Reporting and crediting the 1446 tax.
(1) Reporting 1446 tax.

(i) Reporting of installment tax payments and notification to partners of installment tax payments.
(ii) Payment due dates.
(iii) Annual return and notification to partners.
(iv) Information provided to beneficiaries of foreign trusts and estates.
(v) Attachments required of foreign trusts and estates.
(vi) Attachments required of beneficiaries of foreign trusts and estates.
(vii) Information provided to beneficiaries of foreign trusts and estates that are partners in certain publicly traded partnerships.
(2) Crediting 1446 tax against a partner's U.S. tax liability.
(i) In general.
(ii) Substantiation for purposes of claiming the credit under section 33.
(iii) Special rules for apportioning the tax credit under section 33.
(A) Foreign trusts and estates.
(B) Use of domestic trusts to circumvent section 1446.
(iv) Refunds to withholding agent.
(v) 1446 tax treated as cash distribution to partners.
(vi) Examples.
(e) Liability of partnership for failure to withhold.
(1) In general.
(2) Proof that tax liability has been satisfied and deemed payment of 1446 tax.
(3) Liability for interest, penalties, and additions to the tax.
(i) Partnership.
(ii) Foreign partner.
(4) Examples.
(f) Effect of withholding on partner.

§ 1.1446–4 PUBLICLY TRADED PARTNERSHIPS.

(a) In general.
(b) Definitions.
(1) Publicly traded partnership.
(2) Applicable percentage.
(3) Nominee.
(4) Qualified notice.
(c) Paying and reporting 1446 tax.
(d) Rules for designation of nominees to withhold tax under section 1446.
(e) Determining foreign status of partners.
(f) Distributions subject to withholding.
(1) In general.
(2) In-kind distributions.
(3) Ordering rule relating to distributions.
(4) Coordination with section 1445(e)(1).

§ 1.1446–5 TIERED PARTNERSHIP STRUCTURES.

(a) In general.
(b) Reporting requirements.
(1) In general.
(2) Publicly traded partnerships.
(c) Look through rules for foreign upper-tier partnerships.
(d) Publicly traded partnerships.
(1) Upper-tier publicly traded partnership.
(2) Lower-tier publicly traded partnership.
(e) Election by a domestic upper-tier partnership to apply look through rules.
(1) In general.
(2) Information required for valid election statement.
(3) Consent of lower-tier partnership.
(f) Examples.

§ 1.1446–6T SPECIAL RULES TO REDUCE A PARTNERSHIP'S 1446 TAX WITH RESPECT TO A FOREIGN PARTNER'S ALLOCABLE SHARE OF EFFECTIVELY CONNECTED TAXABLE INCOME (TEMPORARY).

(a) In general.
(b) Foreign partner to whom this section applies.
(1) In general.
(2) Special rules.
(c) Certificate to reduce 1446 tax with respect to a foreign partner.
(1) In general.
(i) Deductions and losses from the partnership from prior taxable years.
(ii) Deductions and losses from sources other than the partnership from prior taxable years.
(iii) Limit on the consideration of a partner's net operating loss deduction.
(iv) Certificate of nonresident alien partner that partnership investment is partner's only activity giving rise to effectively connected items.
(2) Time and form of certification.
(i) Time for certification provided to partnership.
(A) First certificate submitted for a partnership's taxable year.
(B) Updated certificates and status updates.
(*1*) Foreign partner's prior year tax returns not yet filed.
(*2*) Other circumstances requiring a foreign partner to submit an updated certificate.
(*3*) Form and content of updated certificate.
(*4*) When partnership may consider an updated certificate.
(ii) Form of certification.
(3) Notification to partnership when a partner's certificate cannot be relied upon.
(4) Partner to receive copy of notice.
(5) Partner's certificate valid only for partnership taxable year for which submitted.
(d) Effect of certificate of deductions and losses on partners and partnership.
(1) Effect on partner.
(i) No effect on substantive tax liability of foreign partner.
(ii) No effect on partner's estimated tax obligations.
(2) Effect on partnership.
(i) Reasonable reliance to relieve partnership from addition to the tax under section 6655.
(ii) Filing requirement.
(iii) Continuing liability for withholding tax under section 1461 and for applicable interest and penalties.

(iv) Partner's certified deductions and losses to offset foreign partner's annualized allocable share of partnership ECTI.
(e) Examples.
(f) Effective dates.

§ 1.1446–7 EFFECTIVE DATES.

[T.D. 9200, 70 FR 28717, May 18, 2005]

§ 1.1446–1 Withholding tax on foreign partners' share of effectively connected taxable income.

(a) *In general.* If a domestic or foreign partnership has effectively connected taxable income (ECTI) as computed under § 1.1446–2 for any partnership tax year, and any portion of such taxable income is allocable under section 704 to a foreign partner, then the partnership must pay a withholding tax under section 1446 (1446 tax) at the time and in the manner prescribed in this section, and §§ 1.1446–2 through 1.1446–6T.

(b) *Steps in determining 1446 tax obligation.* In general, a partnership determines its 1446 tax as follows. The partnership determines whether it has any foreign partners in accordance with paragraph (c) of this section. If the partnership does not have any foreign partners (including any person presumed to be foreign under paragraph (c) of this section and any domestic trust treated as foreign under § 1.1446–3(d)) during its taxable year, it generally will not have a 1446 tax obligation. If the partnership has one or more foreign partners, it then determines under § 1.1446–2 whether it has ECTI any portion of which is allocable under section 704 to one or more of the foreign partners. If the partnership has ECTI allocable under section 704 to one or more of its foreign partners, the partnership computes its 1446 tax, pays over 1446 tax, and reports the amount paid in accordance with the rules in § 1.1446–3. For special rules applicable to publicly traded partnerships, see § 1.1446–4. For special rules applicable to tiered partnership structures, see § 1.1446–5. For special rules that may apply in determining the amount of 1446 tax due with respect to a partner, see § 1.1446–6T.

(c) *Determining whether a partnership has a foreign partner*—(1) *In general.* Except as otherwise provided in this section, § 1.1446–3, and § 1.1446–5, only a partnership that has at least one foreign partner during the partnership's taxable year can have a 1446 tax liability. Generally, the term foreign partner means any partner of the partnership that is not a U.S. person within the meaning of section 7701(a)(30). Thus, a partner of the partnership is generally a foreign partner if the partner is a nonresident alien, foreign partnership (see § 1.1446–5 for rules that allow a lower-tier partnership to look through an upper-tier foreign partnership to the partners of such partnership for purposes of computing its 1446 tax), foreign corporation (which includes a foreign government pursuant to section 892(a)(3)), foreign estate or trust (see paragraph (c)(2) of this section for rules that instruct a partnership to consider the grantor or other owner of a trust under subpart E of subchapter J as the partner for purposes of computing the partnership's 1446 tax), as those terms are defined under section 7701 and the regulations thereunder, or a foreign organization described in section 501(c), or other foreign person. A person also is a foreign partner if the person is presumed to be a foreign person under paragraph (c)(3) of this section. For purposes of this section, a partner that is treated as a U.S. person for all income tax purposes (by election or otherwise, see e.g., sections 953(d) and 1504(d)) will not be a foreign partner, provided the partner has provided the partnership a valid Form W–9, ''Request for Taxpayer Identification Number and Certification,'' or the partnership uses other means to determine that the partner is not a foreign partner (see paragraph (c)(3) of this section). A partner that is treated as a U.S. person only for certain specified purposes is considered a foreign partner for purposes of section 1446, and a partnership must pay 1446 tax on the portion of ECTI allocable to that partner. For example, a partnership must generally pay 1446 tax on ECTI allocable to a foreign corporate partner that has made an election under section 897(i).

(2) *Submission of Forms W–8BEN, W–8IMY, W–8ECI, W–8EXP, and W–9*—(i) *In general.* Except as otherwise provided in this paragraph (c)(2) or paragraph (c)(3) of this section, a partnership must generally determine whether a

partner is a foreign partner, and the partner's tax classification (*e.g.*, corporate or non-corporate), by obtaining a withholding certificate from the partner that is a Form W–8BEN, ''Certificate of Foreign Status of Beneficial Owner for United States Tax Withholding,'' Form W–8IMY, ''Certificate of Foreign Intermediary, Flow-Through Entity, or Certain U.S. Branches for United States Tax Withholding,'' Form W–8ECI, ''Certificate of Foreign Person's Claim for Exemption from Withholding on Income Effectively Connected With the Conduct of a Trade or Business in the United States,'' Form W–8EXP, ''Certificate of Foreign Government or other Foreign Organization for United States Tax Withholding,'' or a Form W–9, as applicable, or an acceptable substitute form permitted under paragraph (c)(5) of this section. Generally, a foreign partner that is a nonresident alien, a foreign estate or trust (other than a grantor trust described in this paragraph (c)(2)), a foreign corporation, or a foreign government should provide a valid Form W–8BEN.

(ii) *Withholding certificate applicable to each type of partner.* A partner that submits a valid Form W–8 (*e.g.*, Form W–8BEN) for purposes of section 1441 or 1442 will generally satisfy the documentation requirements of this section provided that the submission of such form is not inconsistent with the rules of this paragraph (c)(2) or paragraph (c)(3) of this section. The following rules shall apply for purposes of this section.

(A) *U.S. person.* A partner that is a U.S. person (other than a grantor trust described in this paragraph (c)(2)), including a domestic partnership and domestic simple or complex trust (including an estate), shall provide a valid Form W–9.

(B) *Nonresident alien.* A Form W–8 (*e.g.*, Form W–8BEN) submitted by a nonresident alien for purposes of withholding under section 1441 will generally be accepted for purposes of section 1446. If no such form is submitted for purposes of section 1441, such nonresident alien shall submit Form W–8BEN for purposes of section 1446.

(C) *Foreign partnership.* A partner that is a foreign partnership generally shall provide a valid Form W–8IMY for purposes of section 1446. See § 1.1446–5 (permitting a lower-tier partnership to look through an upper-tier foreign partnership in certain circumstances when computing 1446 tax).

(D) *Disregarded entities.* An entity that is disregarded as an entity separate from its owner under § 301.7701–3 of this chapter (whether domestic or foreign) shall not submit a Form W–8 (*e.g.*, Form W–8BEN) or Form W–9. Instead, the owner of such entity for Federal tax purposes shall submit appropriate documentation to comply with this section. See §§ 301.7701–1 through 301.7701–3 of this chapter for determining the U.S. Federal tax classification of a partner.

(E) *Domestic and foreign grantor trusts.* To the extent that a grantor or other person is treated as the owner of any portion of a trust under subpart E of subchapter J of the Internal Revenue Code, such trust shall provide documentation under this paragraph (c)(2) to identify the trust as a grantor trust and provide documentation on behalf of the grantor or other person treated as the owner of all or a portion of such trust as required by this paragraph (c)(2). If such trust is a foreign trust, the trust shall submit Form W–8IMY to the partnership identifying itself as a foreign grantor trust and shall provide such documentation (*e.g.*, Forms W–8BEN, W–8IMY, W–8ECI, W–8EXP, or W–9) and information pertaining to its grantor or other owner to the partnership that permits the partnership to reliably associate (within the meaning of § 1.1441–1(b)(2)(vii)) such portion of the trust's allocable share of partnership ECTI with the grantor or other person that is the owner of such portion of the trust. If such trust is a domestic trust, the trust shall furnish the partnership a statement under penalty of perjury that the trust is, in whole or in part, a domestic grantor trust and such statement shall identify that portion of the trust that is treated as owned by a grantor or another person under subpart E of subchapter J of the Internal Revenue Code. The trust shall also provide such documentation and information (*e.g.*, Forms W–8BEN, W–8IMY, W–8ECI, W–8EXP, or W–9) pertaining to its grantor or other owner(s) to the

partnership that permits the partnership to reliably associate (within the meaning of §1.1441–1(b)(2)(vii)) such portion of the trust's allocable share of partnership ECTI with the grantor or other person that is the owner of such portion of the trust.

(F) *Nominees.* Where a nominee holds an interest in a partnership on behalf of another person, the beneficial owner of the partnership interest, not the nominee, shall submit a Form W–8 (*e.g.,* Form W–8BEN) or Form W–9 to the partnership or nominee that is the withholding agent.

(G) *Foreign governments, foreign tax-exempt organizations and other foreign persons.* A Form W–8 (*e.g.,* Form W–8EXP) submitted by a partner that is a foreign government, foreign tax-exempt organization, or other foreign person for purposes of withholding under §§1441 through 1443 will also operate to establish the foreign status of such partner under this section. However, except as set forth in §1.1446–3(c)(3) (regarding certain tax-exempt organizations described in section 501(c)), the submission of Form W–8EXP will have no effect on whether there is a 1446 tax due with respect to such partner's allocable share of partnership ECTI. For example, a partnership must still pay 1446 tax with respect to a foreign government partner's allocable share of ECTI because such partner is treated as a foreign corporation under section 892(a)(3). If no Form W–8 is submitted for purposes of withholding under sections 1441 through 1443, then such government, tax-exempt organization, or person must generally submit Form W–8BEN.

(H) *Foreign corporations, certain foreign trusts, and foreign estates.* Consistent with the rules of this paragraph (c)(2) and paragraph (c)(3) of this section, a foreign corporation, a foreign trust (other than a foreign grantor trust described in paragraph (c)(2)(ii)(E) of this section), or a foreign estate may generally submit any appropriate Form W–8 (*e.g.,* Form W–8BEN) to the partnership to establish its foreign status for purposes of section 1446.

(iii) *Effect of Forms W–8BEN, W–8IMY, W–8ECI, W–8EXP, W–9, and statement*—(A) *Partnership reliance on withholding certificate.* In general, for purposes of this section, a partnership may rely on a valid Form W–8 (*e.g.,* Form W–8BEN) or Form W–9, or statement described in this paragraph (c)(2) from a partner, beneficial owner, or grantor trust to determine whether that person, beneficial owner, or the owner of a grantor trust, is a non-foreign or foreign partner for purposes of computing 1446 tax, and if such person is a foreign partner, to determine whether or not such person is a corporation for U.S. tax purposes. The rules of paragraph (c)(3) of this section shall apply to a partnership that receives a Form W–8IMY from a foreign grantor trust or a statement described in this paragraph (c)(2) from a domestic grantor trust, but does not receive a Form W–8 (*e.g.,* Form W–8BEN) or Form W–9 identifying such grantor or other person. Further, a partnership may not rely on a Form W–8 or Form W–9, or statement described in this paragraph (c)(2), and such form or statement is therefore not valid for any installment period or Form 8804 filing date during which the partnership has actual knowledge or has reason to know that any information on the withholding certificate or statement is incorrect or unreliable and, if based on such knowledge or reason to know, the partnership should pay 1446 tax in an amount greater than would be the case if it relied on the certificate or statement.

(B) *Reason to know.* A partnership has reason to know that information on a withholding certificate or statement is incorrect or unreliable if its knowledge of relevant facts or statements contained on the form or other documentation is such that a reasonably prudent person in the position of the withholding agent would question the claims made. See §§1.1441–1(e)(4)(viii) and 1.1441–7(b)(1) and (2).

(C) *Subsequent knowledge and impact on penalties.* If the partnership does not have actual knowledge or reason to know that a Form W–8BEN, Form W–8IMY, Form W–8ECI, Form W–8EXP, Form W–9, or statement received from a partner, beneficial owner, or grantor trust contains incorrect or unreliable information, but it subsequently determines that the certificate or statement

contains incorrect or unreliable information, and, based on such knowledge the partnership should pay 1446 tax in an amount greater than would be the case if it relied on the certificate or statement, then the partnership will not be subject to penalties for its failure to pay the 1446 tax in reliance on such certificate or statement for any installment payment date prior to the date that the determination is made. See §§1.1446–1(c)(4) and 1.1446–3 concerning penalties for failure to pay the withholding tax when a partnership knows or has reason to know that a withholding certificate or statement is incorrect or unreliable.

(iv) *Requirements for certificates to be valid.* Except as otherwise provided in this paragraph (c), for purposes of this section, the validity of a Form W–9 shall be determined under section 3406 and §31.3406(h)–3(e) of this chapter which establish when such form may be reasonably relied upon. A Form W–8BEN, Form W–8IMY, Form W–8ECI, or Form W–8EXP is only valid for purposes of this section if its validity period has not expired, the partner submitting the form has signed it under penalties of perjury, and it contains all the required information.

(A) *When period of validity expires.* For purposes of this section, a Form W–8BEN, Form W–8IMY, Form W–8ECI, or Form W–8EXP submitted by a partner shall be valid until the end of the period of validity determined for such form under §1.1441–1(e). With respect to a foreign partnership submitting Form W–8IMY, the period of validity of such form shall be determined under §1.1441–1(e) as if such foreign partnership submitted the form required of a nonwithholding foreign partnership. See §1.1441–1(e)(4)(ii).

(B) *Required information for Forms W–8BEN, W–8IMY, W–8ECI, and W–8EXP.* Forms W–8BEN, W–8IMY, W–8ECI, and W–8EXP submitted under this section must contain the partner's name, permanent address and Taxpayer Identification Number (TIN), the country under the laws of which the partner is formed, incorporated or governed (if the person is not an individual), the classification of the partner for U.S. Federal tax purposes (*e.g.*, partnership, corporation), and any other information required to be submitted by the forms or instructions for such form, as applicable.

(v) *Partner must provide new withholding certificate when there is a change in circumstances.* The principles of §1.1441–1(e)(4)(ii)(D) shall apply when a change in circumstances has occurred (including situations where the status of a U.S. person changes) that requires a partner to provide a new withholding certificate.

(vi) *Partnership must retain withholding certificates.* A partnership or nominee who has responsibility for paying 1446 tax under this section or §1.1446–4 must retain each withholding certificate, statement, and other information received from its direct and indirect partners for as long as it may be relevant to the determination of the withholding agent's 1446 tax liability under section 1461 and the regulations thereunder.

(3) *Presumptions in the absence of valid Form W–8BEN, Form W–8IMY, Form W–8ECI, Form W–8EXP, Form W–9, or statement.* Except as otherwise provided in this paragraph (c)(3), a partnership that does not receive a valid Form W–8BEN, Form W–8IMY, Form W–8ECI, Form W–8EXP, Form W–9, or statement required by paragraph (c)(2) of this section from a partner, beneficial owner, or grantor trust, or a partnership that receives a withholding certificate or statement but has actual knowledge or reason to know that the information on the certificate or statement is incorrect or unreliable, must presume that the partner is a foreign person. Except as provided in §1.1446–3(a)(2) and §1.1446–5(c)(2), a partnership that knows that a partner is an individual shall treat the partner as a nonresident alien. Except as provided in §1.1446–3(a)(2) and §1.1446–5(c)(2), a partnership that knows that a partner is an entity shall treat the partner as a corporation if the entity is a corporation as defined in §301.7701–2(b)(8) of this chapter. See §1.1446–3(a)(2) which prohibits a partnership in certain circumstances from considering preferential tax rates in computing its 1446 tax when the presumption and rules of this paragraph (c)(3) apply. In all other cases, the partnership shall treat the partner as either a nonresident alien or

a foreign corporation, whichever classification results in a higher 1446 tax being due, and shall pay the 1446 tax in accordance with this presumption. Except as provided in § 1.1446–5(c)(2), the presumption set forth in this paragraph (c)(3) that a partner is a foreign person shall not apply to the extent that the partnership relies on other means to ascertain the non-foreign status of a partner and the partnership is correct in its determination that such partner is a U.S. person. A partnership is in no event required to rely upon other means to determine the non-foreign status of a partner and may demand that a partner furnish an acceptable certificate under this section. If a certificate is not provided in such circumstances, the partnership may presume that the partner is a foreign partner, and for purposes of sections 1461 through 1463, will be considered to have been required to pay 1446 tax on such partner's allocable share of partnership ECTI.

(4) *Consequences when partnership knows or has reason to know that Form W–8BEN, Form W–8IMY, Form W–8ECI, Form W–8EXP, or Form W–9 is incorrect or unreliable and does not withhold.* If a partnership has actual knowledge or has reason to know that a Form W–8BEN, Form W–8IMY, Form W–8ECI, Form W–8EXP, Form W–9, or statement required by paragraph (c)(2) of this section submitted by a partner, beneficial owner, or grantor trust contains incorrect or unreliable information (either because the certificate or statement when given to the partnership contained incorrect information or because there has been a change in facts that makes information on the certificate or statement incorrect), and the partnership pays less than the full amount of 1446 tax due on ECTI allocable to that partner, the partnership shall be fully liable under section 1461 and § 1.1461–3 (§ 1.1461–1 for publicly traded partnerships subject to § 1.1446–4) and § 1.1446–3, and for all applicable penalties and interest, for any failure to pay the 1446 tax for the period during which the partnership has such knowledge or reason to know that the certificate contained incorrect or unreliable information and for all subsequent installment periods. If a partner, beneficial owner, or grantor trust submits a new valid Form W–8BEN, Form W–8IMY, Form W–8ECI, Form W–8EXP, Form W–9, or statement, as applicable, the partnership may rely on that documentation when paying 1446 tax (or any installment of such tax) for any payment date that has not passed at the time such form is received.

(5) *Acceptable substitute form.* A partnership or withholding agent responsible for paying 1446 tax (or any installment of such tax) may substitute its own form for the official version of Form W–8 (*e.g.*, Form W–8BEN) that is recognized under this section to ascertain the identity of its partners, provided such form is consistent with § 1.1441–1(e)(4)(vi). All references under this section or §§ 1.1446–2 through 1.1446–6T to a Form W–8 (*e.g.*, Form W–8BEN, Form W–8IMY, Form W–8ECI, Form W–8EXP) shall include the acceptable substitute form recognized under this paragraph (c)(5).

[T.D. 9200, 70 FR 28717, May 18, 2005]

§ 1.1446–2 Determining a partnership's effectively connected taxable income allocable to foreign partners under section 704.

(a) *In general.* A partnership's effectively connected taxable income (ECTI) is generally the partnership's taxable income as computed under section 703, with adjustments as provided in section 1446(c) and this section, and computed with consideration of only those partnership items which are effectively connected (or treated as effectively connected) with the conduct of a trade or business in the United States. For purposes of determining the section 1446 withholding tax (1446 tax) or any installment of such tax under § 1.1446–3, partnership ECTI allocable under section 704 to foreign partners is the sum of the allocable shares of ECTI of each of the partnership's foreign partners as determined under paragraph (b) of this section. See § 1.1446–6T (special rules permitting the partnership to consider partner-level deductions and losses to reduce the partnership's 1446 tax). The calculation of partnership ECTI allocable to foreign partners as set forth in paragraph (b) of this section and the partnership's withholding tax obligation are partnership-

level computations solely for purposes of determining the 1446 tax. Therefore, any deduction that is not taken into account in calculating a partner's allocable share of partnership ECTI (*e.g.*, percentage depletion), but which is a deduction that under U.S. tax law the foreign partner is otherwise entitled to claim, can still be claimed by the foreign partner when computing its U.S. tax liability and filing its U.S. income tax return, subject to any restriction or limitation that otherwise may apply.

(b) *Computation*—(1) *In general.* A foreign partner's allocable share of partnership ECTI for the partnership's taxable year that is allocable under section 704 to a particular foreign partner is equal to that foreign partner's distributive share of partnership gross income and gain for the partnership's taxable year that is effectively connected and properly allocable to the partner under section 704 and the regulations thereunder, reduced by the foreign partner's distributive share of partnership deductions for the partnership taxable year that are connected with such income under section 873(a) or 882(c) and properly allocable to the partner under section 704 and the regulations thereunder, in each case, after application of the rules of this section. See § 1.1446–6T (special rules permitting the partnership to consider partner-level deductions and losses to reduce the partnership's 1446 tax). For these purposes, a foreign partner's distributive share of effectively connected gross income and gain and the deductions connected with such income shall be computed by considering allocations that are respected under the rules of section 704 and § 1.704–1(b)(1), including special allocations in the partnership agreement (as defined in § 1.704–1(b)(2)(ii)(h)), and adjustments to the basis of partnership property described in section 743 pursuant to an election by the partnership under section 754 (see § 1.743–1(j)). The character of effectively connected partnership items (capital versus ordinary) shall be separately considered only to the extent set forth in paragraph (b)(3)(v) of this section and, when applicable, sections 1.1446–3(a)(2)(consideration of preferential rates when computing 1446 tax) and section 1.1446–6T (special rules permitting the partnership to consider partner-level deductions and losses to reduce the partnership's 1446 tax).

(2) *Income and gain rules.* For purposes of computing a foreign partner's allocable share of partnership ECTI under this paragraph (b), the following rules shall apply with respect to partnership income and gain.

(i) *Application of the principles of section 864.* The determination of whether a partnership's items of gross income are effectively connected shall be made by applying the principles of section 864 and the regulations thereunder.

(ii) *Income treated as effectively connected.* A partnership's items of gross income that are effectively connected include any income that is treated as effectively connected income, including partnership income subject to a partner's election under section 871(d) or section 882(d), any partnership income treated as effectively connected with the conduct of a U.S. trade or business pursuant to section 897, and any other items of partnership income treated as effectively connected under another provision of the Internal Revenue Code, without regard to whether those amounts are taxable to the partner. A partner that makes the election under section 871(d) or section 882(d) shall furnish to the partnership a statement that indicates that such election has been made. See § 1.871–10(d)(3). If a partnership receives a valid Form W–8ECI from a partner, the partner is deemed, for purposes of section 1446, to have effectively connected income subject to withholding under section 1446 to the extent of the items identified on the form.

(iii) *Exempt income.* A foreign partner's allocable share of partnership ECTI does not include income or gain exempt from U.S. tax by reason of a provision of the Internal Revenue Code. A foreign partner's allocable share of partnership ECTI also does not include income or gain exempt from U.S. tax by operation of any U.S. income tax treaty or reciprocal agreement. In the case of income excluded by reason of a treaty provision, such income must be derived by a resident of an applicable treaty jurisdiction, the resident must be the beneficial owner of the item, and

all other requirements for benefits under the treaty must be satisfied. The partnership must have received from the partner a valid withholding certificate, that is, Form W–8BEN (see §1.1446–1(c)(2)(iii) regarding when a Form W–8BEN is valid for purposes of this section), containing the information necessary to support the claim for treaty benefits required in the forms and instructions. In addition, for purposes of this section, the withholding certificate must contain the beneficial owner's taxpayer identification number.

(3) *Deductions and losses.* For purposes of computing a foreign partner's allocable share of partnership ECTI under this paragraph (b), the following rules shall apply with respect to deductions and losses.

(i) *Oil and gas interests.* The deduction for depletion with respect to oil and gas wells shall be allowed, but the amount of such deduction shall be determined without regard to sections 613 and 613A.

(ii) *Charitable contributions.* The deduction for charitable contributions provided in section 170 shall not be allowed.

(iii) *Net operating losses and other suspended or carried losses.* Except as provided in §1.1446–6T, the net operating loss deduction of any foreign partner provided in section 172 shall not be taken into account. Further, except as provided in §1.1446–6T, the partnership shall not take into account any suspended losses (*e.g.*, losses in excess of a partner's basis in the partnership, see section 704(d)) or any capital loss carrybacks or carryovers available to a foreign partner.

(iv) *Interest deductions.* The rules of this paragraph (b)(3)(iv) shall apply for purposes of determining the amount of interest expense that is allocable to income which is (or is treated as) effectively connected with the conduct of a trade or business for purposes of calculating a foreign partner's allocable share of partnership ECTI. In the case of a non-corporate foreign partner, the rules of §1.861–9T(e)(7) shall apply. In the case of a corporate foreign partner, the rules of §1.882–5 shall apply by treating the partnership as a foreign corporation and using the partner's pro-rata share of the partnership's assets and liabilities for these purposes. For these purposes, the rules governing elections under §1.882–5(a)(7) shall be made at the partnership level.

(v) *Limitation on capital losses.* Losses from the sale or exchange of capital assets allocable under section 704 to a partner shall be allowed only to the extent of gains from the sale or exchange of capital assets allocable under section 704 to such partner.

(vi) *Other deductions.* No deduction shall be allowed for personal exemptions provided in section 151 or the additional itemized deductions for individuals provided in part VII of subchapter B of the Internal Revenue Code (section 211 and following).

(vii) *Limitations on deductions.* Except as provided in §1.1446–6T and this paragraph (b)(3), any limitations on losses or deductions that apply at the partner level when determining ECTI allocable to a foreign partner shall not be taken into account.

(4) *Other rules*—(i) *Exclusion of items allocated to U.S. partners.* Except as provided in §1.1446–5(e), in computing partnership ECTI, the partnership shall not take into account any item of income, gain, loss, or deduction to the extent allocable to any partner that is not a foreign partner, as that term is defined in §1.1446–1(c).

(ii) *Partnership credits.* See §1.1446–3(a) providing that the 1446 tax is computed without regard to a partner's distributive share of the partnership's tax credits.

(5) *Examples.* The following examples illustrate the application of this section. In considering the examples, disregard the potential application of §1.1446–3(b)(2)(v)(F) (relating to the de minimis exception to paying 1446 tax). The examples are as follows:

Example 1. Limitation on capital losses. PRS partnership has two equal partners, A and B. A is a nonresident alien and B is a U.S. citizen. A provides PRS with a valid Form W–8BEN, and B provides PRS with a valid Form W–9. PRS has the following annualized tax items for the relevant installment period, all of which are effectively connected with its U.S. trade or business and are allocated equally between A and B: $100 of long-term capital gain, $400 of long-term capital loss, $300 of ordinary income, and $100 of ordinary deductions. Assume that these allocations

are respected under section 704(b) and the regulations thereunder. Accordingly, A's allocable share of PRS's effectively connected items includes $50 of long-term capital gain, $200 of long-term capital loss, $150 of ordinary income, and $50 of ordinary deductions. In determining A's allocable share of partnership ECTI, the amount of the long-term capital loss that may be taken into account pursuant to paragraph (b)(3)(v) of this section is limited to A's allocable share of gain from the sale or exchange of capital assets. Accordingly, A's share of partnership ECTI allocable under section 704 pursuant to § 1.1446–2 is $100 ($150 of ordinary income less $50 of ordinary deductions, plus $50 of capital gain less $50 of capital loss).

Example 2. Limitation on capital losses—special allocations. PRS partnership has two equal partners, A and B. A and B are both nonresident aliens. A and B each provide PRS with a valid Form W–8BEN. PRS has the following annualized tax items for the relevant installment period, all of which are effectively connected with its U.S. trade or business: $200 of long-term capital gain, $200 of long-term capital loss, and $400 of ordinary income. A and B have equal shares in the ordinary income, however, pursuant to the partnership agreement, capital gains and losses are subject to special allocations. The long-term capital gain is allocable to A, and the long-term capital loss is allocable to B. Assume that these allocations are respected under section 704(b) and the regulations thereunder. Pursuant to paragraph (b)(3)(v) of this section, A's allocable share of partnership ECTI under § 1.1446–2 is $400 (consisting of $200 of ordinary income and $200 of long-term capital gain), and B's allocable share of partnership ECTI is $200 (consisting of $200 of ordinary income).

Example 3. Withholding tax obligation where partner has net operating losses. PRS partnership has two equal partners, FC, a foreign corporation, and DC, a domestic corporation. FC and DC provide a valid Form W–8BEN and Form W–9, respectively, to PRS. Both FC and PRS are on a calendar taxable year. PRS is engaged in the conduct of a trade or business in the United States and for its first installment period during its taxable year has $100 of annualized ECTI that is allocable to FC. As of the beginning of the taxable year, FC had an unused effectively connected net operating loss carryover in the amount of $300. FC's net operating loss carryover is not taken into account in determining FC's allocable share of partnership ECTI under § 1.1446–2 and, absent the application of § 1.1446–6T (permitting a foreign partner to certify deductions and losses reasonably expected to be available to reduce the partner's U.S. income tax liability on the effectively connected income or gain allocable from the partnership), is not considered in computing the 1446 tax installment payment due on behalf of FC. Accordingly, PRS must pay 1446 tax with respect to the $100 of ECTI allocable to FC.

[T.D. 9200, 70 FR 28717, May 18, 2005]

§ 1.1446–3 Time and manner of calculating and paying over the 1446 tax.

(a) *In general*—(1) *Calculating 1446 tax.* This section provides rules for calculating, reporting, and paying over the section 1446 withholding tax (1446 tax). A partnership's 1446 tax equals the amount determined under this section and shall be paid in installments during the partnership's taxable year (see paragraph (d)(1) of this section for installment payment due dates), with any remaining tax due paid with the partnership's annual return required to be filed pursuant to paragraph (d) of this section. For these purposes, a partnership shall not take into account either a partner's liability for any other tax imposed under any other provision of the Internal Revenue Code (*e.g.,* section 55 or 884) or a partner's distributive share of the partnership's tax credits when determining the amount of the partnership's 1446 tax.

(2) *Applicable percentage*—(i) *In general.* Except as provided in this paragraph (a)(2), in the case of a foreign partner that is a corporation for U.S. tax purposes, the applicable percentage is the highest rate of tax specified in section 11(b)(1) for such taxable year. Except as provided in this paragraph (a)(2) and § 1.1446–5, in the case of a foreign partner that is not a corporation for U.S. tax purposes (*e.g.,* a partnership, individual, trust or estate), the applicable percentage is the highest rate of tax specified in section 1.

(ii) *Special types of income or gain.* Except as otherwise provided, a partnership is permitted to consider as the applicable percentage under this paragraph (a)(2) the highest rate of tax applicable to a particular type of income or gain allocable to a partner (*e.g.,* long-term capital gain allocable to a non-corporate partner, unrecaptured section 1250 gain, collectibles gain under section 1(h)), to the extent of a partner's allocable share of such income or gain. Consideration of the highest rate of tax applicable to a particular type of income or gain under the previous sentence shall be made

without regard to the amount of such partner's income. A partnership is not permitted to consider the highest rate of tax applicable to a particular type of income or gain under this paragraph (a)(2)(ii) if the application of the preferential rate depends upon the corporate or non-corporate status of the person reporting the income or gain and, either no documentation has been provided to the partnership under §1.1446–1 to establish the corporate or non-corporate status of the partner required to pay tax on the income or gain, or the partnership is otherwise required to compute and pay 1446 tax on such portion of the income or gain using the highest applicable percentage under section 1446(b). See *e.g.*, §§1.1446–1(c)(3) (presumption of foreign status in the absence of documentation) and 1.1446–5(c)(2) (requirement to pay 1446 tax at higher of rates in section 1446(b) where a lower-tier partnership cannot reliably associate income with a partner of the upper-tier partnership).

(b) *Installment payments*—(1) *In general.* Except as provided in §1.1446–4 for certain publicly traded partnerships, a partnership must pay its 1446 tax by making installment payments of the 1446 tax based on the amount of partnership ECTI allocable under section 704 to its foreign partners, without regard to whether the partnership makes any distributions to its partners during the partnership's taxable year. The amount of the installment payments is determined in accordance with this paragraph (b), and the tax must be paid at the times set forth in paragraph (d) of this section. Subject to paragraphs (b)(2)(v) and (b)(3)(ii) of this section, in computing its first installment of 1446 tax for a taxable year, a partnership must decide whether it will pay its 1446 tax for the entire taxable year by using the safe harbor set forth in paragraph (b)(3)(i) of this section, or by using one of several annualization methods available under paragraph (b)(2)(ii) of this section for computing partnership ECTI allocable to foreign partners. In the case of a partnership's underpayment of an installment of 1446 tax, the partnership shall be subject to an addition to the tax equal to the amount determined under section 6655, as modified by this section, as if such partnership were a corporation, as well as any other applicable interest and penalties. See §1.1446–3(f). Section 6425 (permitting an adjustment for an overpayment of estimated tax by a corporation) shall not apply to a partnership's payment of its 1446 tax.

(2) *Calculation*—(i) *General application of the principles of section 6655.* Installment payments of 1446 tax required during the partnership's taxable year are based upon partnership ECTI for the portion of the partnership taxable year to which they relate, and, except as set forth in this paragraph (b)(2) or paragraph (b)(3) of this section, shall be calculated using the principles of section 6655. Under the principles of section 6655, the partnership's effectively connected items of income, gain, loss and deduction are annualized to determine each foreign partner's allocable share of partnership ECTI under §1.1446–2. To the extent applicable, §1.1446–6T may be considered for purposes of this section to reduce the amount of the partner's allocable share of partnership ECTI to an amount that is subject to tax under section 1446. Each foreign partner's allocable share of partnership ECTI that is subject to tax under section 1446, or portion thereof, is then multiplied by the relevant applicable percentage for the type of income allocable to the foreign partner under paragraph (a)(2) of this section. The respective tax amounts are then added for each foreign partner. This computation will yield an annualized 1446 tax with respect to such partner. The installment of 1446 tax due with respect to a foreign partner's allocable share of partnership ECTI subject to tax under section 1446 equals the excess of the section 6655(e)(2)(B)(ii) percentage of the annualized 1446 tax for that partner (or, if applicable, the adjusted seasonal amount) for the relevant installment period, over the aggregate of any amounts paid under section 1446 with respect to that partner in prior installments during the partnership's taxable year. Therefore, the total amount of a partnership's 1446 tax installment payment is equal to the sum of the installment payments due for such period on behalf of all the partnership's foreign partners.

(ii) *Annualization methods.* A partnership that decides to annualize its income for the taxable year shall use one of the annualization methods set forth in section 6655(e) and the regulations thereunder, and as described in the forms and instructions for Form 8804, ''Annual Return for Partnership Withholding Tax (Section 1446),'' Form 8805, ''Foreign Partner's Information Statement of Section 1446 Withholding Tax,'' and Form 8813, ''Partnership Withholding Tax Payment Voucher.''

(iii) *Partner's estimated tax payments.* In computing its installment payments of 1446 tax, a partnership may not take into account a partner's estimated tax payments.

(iv) *Partner whose interest terminates during the partnership's taxable year.* If a partner's interest in the partnership terminates prior to the end of the partnership's taxable year, the partnership shall take into account the income that is allocable to the partner for the portion of the partnership taxable year that the person was a partner.

(v) *Exceptions and modifications to the application of the principles under section 6655.* To the extent not otherwise modified in §§ 1.1446–1 through 1.1446–7 or inconsistent with those rules, the principles of section 6655 apply to the calculation of the installment payments of 1446 tax made by a partnership as set forth in this paragraph (b)(2)(v).

(A) *Inapplicability of special rules for large corporations.* The principles of section 6655(d)(2), concerning large corporations (as defined in section 6655(g)(2)), shall not apply.

(B) *Inapplicability of special rules regarding early refunds.* The principles of section 6655(h), applicable to amounts excessively credited or refunded under section 6425, shall not apply. See paragraph (b)(1) of this section providing that section 6425 shall not apply for purposes of the 1446 tax. This paragraph (b)(2)(v)(B) shall apply to 1446 tax paid by a partnership or nominee, as well as to amounts that a partner is deemed to have paid for estimated tax purposes by reason of the partnership's or nominee's 1446 tax payments under § 1.1446–3(d)(1)(i).

(C) *Period of underpayment.* The period of the underpayment set forth in section 6655(b)(2) shall end on the earlier of the 15th day of the 4th month following the close of the partnership's taxable year (or, in the case of a partnership described in § 1.6081–5(a)(1) of this chapter, the 15th day of the 6th month following the close of the partnership's taxable year), or with respect to any portion of the underpayment, the date on which such portion is paid.

(D) *Other taxes.* Section 6655 shall be applied without regard to any references to alternative minimum taxable income and modified alternative minimum taxable income.

(E) *1446 tax treated as tax under section 11.* The principles of section 6655(g)(1) shall be applied to treat the 1446 tax as a tax imposed by section 11, and any partnership required to pay such tax shall be treated as a corporation.

(F) *Application of section 6655(f).* A partnership subject to section 1446 shall apply section 6655(f) after aggregating the 1446 tax due (or any installment of such tax) for all its foreign partners. See § 1.1446–6T for an exception to this rule when a nonresident alien partner certifies to the partnership that the partnership investment is the nonresident alien partner's only activity giving rise to effectively connected items.

(G) *Application of section 6655(i).* If a partnership has a taxable year of less than 12 months, the partnership is required to pay 1446 tax (including installments of such tax) in accordance with this section § 1.1446–3, if the partnership has ECTI allocable under section 704 to foreign partners. In such a case, the partnership shall adjust its installment payments of 1446 tax in a reasonable manner (*e.g.,* the annualized amounts of ECTI estimated to be allocable to a foreign partner, and the section 6655(e)(2)(B)(ii) percentage to be applied to each installment) to account for the short-taxable year. However, if the partnership's taxable year is a period of less than 4 months, the partnership shall not be required to make installment payments of 1446 tax, but will only be required to file Forms 8804 and 8805 in accordance with this section § 1.1446–3, and report and pay the appropriate 1446 tax for the short-taxable year.

(H) *Current year tax safe harbor.* The safe harbor set forth in section

6655(d)(1)(B)(i) shall apply to a partnership subject to section 1446.

(I) *Prior year tax safe harbor.* The safe harbor set forth in section 6655(d)(1)(B)(ii) shall not apply and instead the safe harbor set forth in paragraph (b)(3) of this section applies.

(3) *1446 tax safe harbor*—(i) *In general.* The addition to tax under section 6655 shall not apply to a partnership with respect to a current installment of 1446 tax if—

(A) The average of the amount of the current installment and prior installments during the taxable year is at least 25 percent of the total 1446 tax that would be payable on the amount of the partnership's ECTI allocable under section 704 to foreign partners (without regard to §1.1446–6T) for the prior taxable year;

(B) The prior taxable year consisted of twelve months;

(C) The partnership timely files (including extensions) an information return under section 6031 for the prior year; and

(D) The amount of ECTI for the prior taxable year is not less than 50 percent of the ECTI shown on the annual return of section 1446 withholding tax that is (or will be) timely filed for the current year.

(ii) *Permission to change to standard annualization method.* Except as otherwise provided in this paragraph (b)(3)(ii), if a partnership decides to pay its 1446 tax for the first installment period based upon the safe harbor method set forth in paragraph (b)(3)(i), the partnership must use the safe harbor method for each installment payment made during the partnership's taxable year. Notwithstanding the previous sentence, if a partnership paying over 1446 tax during the taxable year pursuant to this paragraph (b)(3) determines during an installment period (based upon the standard option annualization method set forth in section 6655(e) and the regulations thereunder, as modified by the forms and instructions to Forms 8804, 8805, and 8813) that it will not qualify for the safe harbor in this paragraph (b)(3) because the prior year's ECTI will not meet the 50-percent threshold in paragraph (b)(3)(i)(D) of this section, then the partnership is permitted, without being subject to the addition to the tax under section 6655 (as applied through this section), to pay over its 1446 tax for the period in which such determination is made, and all subsequent installment periods during the taxable year, using the standard option annualization method. A change pursuant to this paragraph shall be disclosed in a statement attached to the Form 8804 the partnership files for the taxable year and shall include information to allow the IRS to determine whether the change was appropriate.

(c) *Coordination with other withholding rules*—(1) *Fixed or determinable, annual or periodical income.* Fixed or determinable, annual or periodical income subject to tax under section 871(a) or section 881 is not subject to withholding under section 1446, and such income is subject to the withholding requirements of sections 1441 and 1442 and the regulations thereunder.

(2) *Real property gains*—(i) *Domestic partnerships.* Except as otherwise provided in this paragraph (c)(2), a domestic partnership that is otherwise subject to the withholding requirements of sections 1445 and 1446 will be subject to the payment and reporting requirements of section 1446 only and not section 1445(e)(1) and the regulations thereunder, with respect to partnership gain from the disposition of a U.S. real property interest (as defined in section 897(c)). A partnership that has complied with the requirements of section 1446 will be deemed to satisfy the withholding requirements of section 1445 and the regulations thereunder. However, a domestic partnership that would otherwise be exempt from section 1445 withholding by operation of a nonrecognition provision must continue to comply with the requirements of §1.1445–5(b)(2). In the event that amounts are withheld under section 1445(e) at the time of the disposition of a U.S. real property interest, such amounts may be credited against the partnership's 1446 tax. A partnership that fails to comply fully with the requirements of section 1446 pursuant to this paragraph (c)(2) shall be liable for any unpaid 1446 tax and subject to any applicable addition to the tax, interest, and penalties under section 1446. See §1.1446–4(f)(4) for rules coordinating the

withholding liability of publicly traded partnerships under sections 1445 and 1446.

(ii) *Foreign partnerships.* A foreign partnership that is subject to withholding under section 1445(a) during its taxable year may credit the amount withheld under section 1445(a) against its section 1446 tax liability for that taxable year only to the extent such amount is allocable to foreign partners.

(3) *Coordination with section 1443.* A partnership that has ECTI allocable under section 704 to a foreign organization described in section 501(c) shall be required to pay 1446 tax on such ECTI only to the extent such ECTI is includible under section 512 and section 513 in computing the organization's unrelated business taxable income. The certificate procedure available under §1.1441–9(b)(1) by which a partner may set forth the amounts it believes will and will not be includible in its computation of unrelated business taxable income under section 512 and section 513 shall also apply to a partner in a partnership subject to section 1446. Such certificate shall be made by a partner in the same manner as under §1.1441–9(b)(2). A partnership that determines that the partner's certificate as to certain partnership items is unreliable or lacking must presume, consistent with §1.1441–9(b)(3) (regarding amounts includible under section 512 in computing the organization's unrelated business taxable income), that such partnership items would be includible in computing the partner's UBTI.

(d) *Reporting and crediting the 1446 tax*—(1) *Reporting 1446 tax.* This paragraph (d) sets forth the rules for reporting and crediting the 1446 tax paid by a partnership. To the extent that 1446 tax is paid on ECTI allocable to a domestic trust (including a grantor or other person treated as an owner of a portion of such trust) or a grantor or other person treated as the owner of a portion of a foreign trust, the rules of this paragraph (d) applicable to a foreign trust or its beneficiaries shall be applied to such domestic or foreign trust and its beneficiaries or owners, as applicable, so that appropriate credit for the 1446 tax may be claimed by the trust, beneficiary, grantor, or other person.

(i) *Reporting of installment tax payments and notification to partners of installment tax payments.* Each partnership required to make an installment payment of 1446 tax must file Form 8813, ''Partnership Withholding Tax Payment Voucher (Section 1446),'' in accordance with the instructions to that form. Form 8813 is generally used to transmit an installment payment of 1446 tax to the IRS with respect to partnership ECTI estimated to be allocated to foreign partners. However, see §1.1446–6T (relating to circumstances where a partnership must file Form 8813 when no payment is required under section 1446). Except as provided in this section, a partnership must notify each foreign partner of the 1446 tax paid on the partner's behalf when the partnership makes an installment payment of 1446 tax. The notice required to be given to a foreign partner under the previous sentence must be provided within 10 days of the installment payment due date, or, if paid later, the date such installment payment is made. A foreign partner generally may credit an installment of 1446 tax paid by the partnership on the partner's behalf against the partner's estimated tax that the partner must pay during the partner's own taxable year. See §1.1446–5(b) (relating to tiered partnership structures). However, a foreign partner may not obtain an early refund of such amounts under the estimated tax rules. See §1.1446–3(b)(2)(v)(B). See paragraph (d)(2) of this section for the amount of 1446 tax a partner may credit against its U.S. income tax liability. No particular form is required for a partnership's notification to a foreign partner, but each notification must include the partnership's name, the partnership's Taxpayer Identification Number (TIN), the partnership's address, the partner's name, the partner's TIN, the partner's address, the annualized ECTI estimated to be allocated to the foreign partner (or prior year's safe harbor amount, if applicable), and the amount of tax paid on behalf of the partner for both the current and any prior installment periods during the partnership's taxable year. Notwithstanding any other provision of this

paragraph (d), a withholding agent is not required to notify a partner of an installment of 1446 tax paid on the partner's behalf, unless requested by the partner, if—

(A) The partnership's agent responsible for providing notice pursuant to this paragraph is the same person that acts as an agent of the foreign partner for purposes of filing the partner's U.S. Federal income tax return for the partner's taxable year that includes the installment payment date; or

(B) The partnership has at least 500 foreign partners and the total 1446 tax that the partnership determines will be required to be paid for the partnership taxable year on behalf of such partner (based on paragraph (b)(2)(ii) or (3) of this section) with respect to the partner's allocable share of ECTI is less than $1,000.

(ii) *Payment due dates.* The 1446 tax is calculated based on partnership ECTI allocable under section 704 to foreign partners during the partnership's taxable year, as determined under section 706. Installment payments of the 1446 tax generally must be made during the partnership's taxable year in which such income is derived. A partnership must pay to the Internal Revenue Service a portion of its estimated annual 1446 tax in installments on or before the 15th day of the fourth, sixth, ninth, and twelfth months of the partnership's taxable year as provided in section 6655. Any additional amount determined to be due is to be paid with the filing of the annual return of tax required under paragraph (d)(1)(iii) of this section and clearly designated as for the prior taxable year. Form 8813 should not be submitted for a payment made under the preceding sentence.

(iii) *Annual return and notification to partners.* Every partnership (except a publicly traded partnership subject to §1.1446–4) that has effectively connected gross income for the partnership's taxable year allocable under section 704 to one or more of its foreign partners (or is treated as having paid 1446 tax under §1.1446–5(b)), must file Form 8804, ''Annual Return for Partnership Withholding Tax (Section 1446).'' Additionally, every partnership that is required to file Form 8804 also must file Form 8805, ''Foreign Partner's Information Statement of Section 1446 Withholding Tax,'' for each of its foreign partners on whose behalf it paid 1446 tax, and furnish Form 8804 and the Forms 8805 to the Internal Revenue Service and the respective Form 8805 to each of its partners. Notwithstanding the previous sentence, a partnership that considers a foreign partner's certificate under §1.1446–6T when computing its 1446 tax on Form 8804 is required to furnish such partner and the Internal Revenue Service a Form 8805, even if the form submitted to the partner shows no payment of 1446 tax on behalf of the partner. Forms 8804 and 8805 are separate from Form 1065, ''U.S. Return of Partnership Income,'' and the attachments thereto, and are not to be filed as part of the partnership's Form 1065. A partnership must generally file Forms 8804 and 8805 on or before the due date for filing the partnership's Form 1065. See §1.6031(a)–1(c) for rules concerning the due date of a partnership's Form 1065. However, with respect to partnerships described in §1.6081–5(a)(1), Forms 8804 and 8805 are not due until the 15th day of the sixth month following the close of the partnership's taxable year.

(iv) *Information provided to beneficiaries of foreign trusts and estates.* A foreign trust or estate that is a partner in a partnership subject to withholding under section 1446 shall be provided Form 8805 by the partnership. The foreign trust or estate must provide to each of its beneficiaries a copy of the Form 8805 furnished by the partnership. In addition, the foreign trust or estate must provide a statement for each of its beneficiaries to inform each beneficiary of the amount of the credit that may be claimed under section 33 (as determined under this section) for the 1446 tax paid by the partnership. Until an official Internal Revenue Service form is available, the statement from a foreign trust or estate that is described in this paragraph (d)(1)(iv) shall contain the following information—

(A) Name, address, and TIN of the foreign trust or estate;

(B) Name, address, and TIN of the partnership;

(C) The amount of the partnership's ECTI allocated to the foreign trust or

estate for the partnership taxable year (as shown on the Form 8805 provided to the trust or estate);

(D) The amount of 1446 tax paid by the partnership on behalf of the foreign trust or estate (as shown on Form 8805 to the trust or estate);

(E) Name, address, and TIN of the beneficiary of the foreign trust or estate;

(F) The amount of the partnership's ECTI allocated to the trust or estate for purposes of section 1446 that is to be included in the beneficiary's gross income; and

(G) The amount of 1446 tax paid by the partnership on behalf of the foreign trust or estate that the beneficiary is entitled to claim on its return as a credit under section 33.

(v) *Attachments required of foreign trusts and estates.* The statement furnished to each foreign beneficiary under this paragraph (d)(1) must also be attached to the foreign trust or estate's U.S. Federal income tax return filed for the taxable year that includes the installment periods to which the statement relates.

(vi) *Attachments required of beneficiaries of foreign trusts and estates.* The beneficiary of the foreign trust or estate must attach the statement provided by the trust or estate pursuant to paragraph (d)(1)(iv) of this section, along with a copy of the Form 8805 furnished by the partnership to such trust or estate, to its U.S. income tax return for the year in which it claims a credit for the 1446 tax. See §1.1446–3(d)(2)(ii) for additional rules regarding a partner or beneficial owner claiming a credit for the 1446 tax.

(vii) *Information provided to beneficiaries of foreign trusts and estates that are partners in certain publicly traded partnerships.* A statement similar to the statement required by paragraph (d)(1)(iv) of this section shall be provided by trusts or estates that hold interests in publicly traded partnerships subject to §1.1446–4.

(2) *Crediting 1446 tax against a partner's U.S. tax liability*—(i) *In general.* A partnership's payment of 1446 tax on the portion of ECTI allocable to a foreign partner generally relates to the partner's U.S. income tax liability for the partner's taxable year in which the partner is subject to U.S. tax on that income. Subject to paragraphs (d)(2)(ii) and (iii) of this section, a partner may claim as a credit under section 33 the 1446 tax paid by the partnership with respect to ECTI allocable to that partner. The partner may not claim an early refund of these amounts under the estimated tax rules. See paragraph (d)(1)(i) of this section regarding a partner's ability to credit an installment of 1446 tax paid on the partner's behalf against the partner's estimated tax payments due for the taxable year. See also §1.1446–5(b) (relating to tiered partnership structures).

(ii) *Substantiation for purposes of claiming the credit under section 33.* A partner may credit the amount paid under section 1446 with respect to such partner against its U.S. income tax liability only if it attaches proof of payment to its U.S. income tax return for the partner's taxable year in which the items comprising such partner's allocable share of partnership ECTI are included in the partner's income. Except as provided in the next sentence, proof of payment consists of a copy of the Form 8805 the partnership provides to the partner (or in the case of a beneficiary of a foreign trust or estate, the statement required under paragraph (d)(1)(iv) or (vii) of this section to be provided by such trust or estate and a copy of the related Form 8805 furnished to such trust or estate), but only if the name and TIN on the Form 8805 (or the statement provided by a foreign trust or estate) match the name and TIN on the partner's U.S. tax return, and such form (or statement) identifies the partner (or beneficiary) as the person entitled to the credit under section 33. In the case of a partner of a publicly traded partnership that is subject to withholding on distributions under §1.1446–4, proof of payment consists of a copy of the Form 1042–S, ''Foreign Person's U.S. Source Income Subject to Withholding,'' provided to the partner by the partnership.

(iii) *Special rules for apportioning the tax credit under section 33*—(A) *Foreign trusts and estates.* Section 1446 tax paid on the portion of ECTI allocable under section 704 to a foreign trust or estate that the foreign trust or estate may claim as a credit under section 33 shall

bear the same ratio to the total 1446 tax paid on behalf of the trust or estate as the total ECTI allocable to such trust or estate and not distributed (or treated as distributed) to the beneficiaries of such trust or estate, and, accordingly not deducted under section 651 or section 661 in calculating the trust or estate's taxable income, bears to the total ECTI allocable to such trust or estate. The 1446 tax that a foreign trust or estate is not entitled to claim as a credit under this paragraph (d)(2) may be claimed as a credit by the beneficiary of such trust or estate that includes the partnership ECTI allocated to the trust or estate in gross income under section 652 or section 662 (whether distributed or deemed to be distributed and with the same character as effectively connected income as in the hands of the trust or estate). In the case of a foreign trust or estate with multiple beneficiaries, each beneficiary may claim a portion of the 1446 tax that may be claimed by all beneficiaries under the previous sentence as a credit in the same proportion as the amount of ECTI included in such beneficiary's gross income bears to the total amount of ECTI included by all beneficiaries. The trust or estate must provide each beneficiary with a copy of the Form 8805 provided to it by the partnership and prepare the statement required by paragraph (d)(1)(iv) of this section.

(B) *Use of domestic trusts to circumvent section 1446.* This paragraph (d)(2)(iii)(B) shall apply if a partnership knows or has reason to know that a foreign person holds its interest in the partnership through a domestic trust, and such domestic trust was formed or availed of with a principal purpose of avoiding the 1446 tax. The use of a domestic trust may have a principal purpose of avoiding the 1446 tax even though the tax avoidance purpose is outweighed by other purposes when taken together. In such case, a partnership is required to pay 1446 tax under this paragraph as if the domestic trust was a foreign trust for purposes of section 1446 and the regulations thereunder. Accordingly, all applicable additions to the tax, interest, and penalties shall apply to the partnership for its failure to pay 1446 tax under this paragraph (d)(2)(iii)(B), commencing with the installment period during which the partnership knows or has reason to know that this paragraph (d)(2)(iii)(B) applies. A publicly traded partnership within the meaning of §1.1446–4 (or a nominee required to pay 1446 tax under §1.1446–4) will not be considered to know or have reason to know a domestic trust is being used to avoid the 1446 tax under this paragraph (d)(2)(iii)(B), provided the interest held in such entity by the domestic trust is publicly traded.

(iv) *Refunds to withholding agent.* A withholding agent (*i.e.*, the partnership) may obtain a refund of the 1446 tax paid (or deemed paid under §1.1446–5(b)) to the extent of the excess of the amount paid to the Internal Revenue Service by the partnership, over the partnership's section 1446 tax liability as determined by the sum of the total tax creditable to each partner indicated on all Forms 8805 for the taxable year. If a partnership issues Form 8805 to a partner, then the partnership may not claim a refund for any amount of tax shown on that form as paid on behalf of the partner. If a partnership incorrectly withholds upon a United States person under section 1446 of the Internal Revenue Code and issues a Form 8805 to that person, the partnership may not file for a refund of the amount incorrectly withheld. Instead, the United States person may file for a refund of that amount on its annual return. For rules concerning refunds to withholding agents who pay 1446 tax on distributions of effectively connected income or gain under §1.1446–4 (*i.e.*, publicly traded partnerships or nominees), see §1.1464–1.

(v) *1446 tax treated as cash distribution to partners.* Except as otherwise provided in this paragraph (d)(2)(v), a partnership's payment of 1446 tax on behalf of a foreign partner is treated under section 1446(d) and this section as a deemed distribution of money to the partner on the earliest of the day on which the partnership paid the tax, the last day of the partnership's taxable year for which the amount was paid, or the last day on which the partner owned an interest in the partnership during the taxable year for which the

tax was paid. However, a deemed distribution of money under section 1446(d) resulting from a partnership's installment payment of 1446 tax on behalf of a partner is treated as an advance or drawing of money under § 1.731–1(a)(1)(ii) to the extent of the partner's distributive share of income for the partnership taxable year. The rule treating a deemed distribution as an advance or drawing of money under this paragraph (d)(2)(v) applies only for purposes of determining the tax results of the deemed distribution to the partner under sections 705, 731, and 733, and does not affect the date that the partnership is considered to have paid any installment of 1446 tax for purposes of section 6655 (as applied through this section) or the date a foreign partner is deemed to have paid estimated tax by reason of such installment payment. See paragraph (d)(1)(i) of this section (permitting a partner to credit 1446 tax paid on the partner's behalf against the partner's estimated tax obligation). An amount treated as an advance or drawing of money is taken into account at the end of the partnership taxable year or the last day during the partnership's taxable year on which the partner owned an interest in the partnership. Any 1446 tax paid after the close of the partnership's taxable year, including amounts paid with the filing of Form 8804, that are on account of partnership ECTI allocated to partners for the prior taxable year shall be treated under section 1446(d) and this section as a distribution from the partnership on the earlier of the last day of the partnership's prior taxable year for which the tax is paid, or the last day in such prior taxable year on which such foreign partner held an interest in the partnership.

(vi) *Examples.* The following examples illustrate the application of this section. In considering the examples, disregard the potential application of paragraph (b)(2)(v)(F) of this section (relating to the *de minimis* exception to paying 1446 tax). The examples are as follows:

Example 1. Simple trust that reports entire amount of ECTI. PRS is a partnership that has two partners, FT, a foreign trust, and A, a U.S. person. FT is a simple trust under section 651. FT and A each provide PRS with a valid Form W–8BEN and Form W–9, respectively. FT has one beneficiary, NRA, a nonresident alien. PRS and FT each maintain a calendar taxable year. PRS estimated for each installment period during the partnership's taxable year that FT would be allocated $100 of ECTI for the taxable year, and that all such ECTI would be ordinary in character. Assume that the allocation of the $100 would be respected under section 704(b) and the regulations thereunder. PRS pays installments of 1446 tax based upon its estimates and timely pays a total of $35 of 1446 tax over the course of the partnership's taxable year ($100 ECTI x .35). Assume that PRS' estimates of ECTI allocable to FT during the taxable year equal the actual amount of ECTI allocable to FT for the taxable year. Assume also that FT's only income for the taxable year is the $100 of income from PRS, and that, pursuant to the terms of the trust's governing instrument and local law, the $100 of ECTI is not included in FT's fiduciary accounting income and the deemed distribution of the $35 withholding tax paid under paragraph (d)(2)(v) of this section is not included in FT's fiduciary accounting income. Accordingly, the $100 of ECTI is not income required to be distributed by FT, and FT may not claim a deduction under section 651 for this amount. FT must report the $100 of ECTI in its gross income and may claim a credit under section 33 as determined under paragraph (d)(2)(iii) of this section of $35 for the 1446 tax paid by PRS. NRA is not required to include any of the ECTI in gross income and accordingly may not claim a credit for any amount of the $35 of 1446 tax PRS paid.

Example 2. Simple trust that distributes a portion of ECTI to the beneficiary. Assume the same facts as in *Example 1,* except that PRS distributes $60 to FT, which FT includes in its fiduciary accounting income under local law. FT will report the $100 of ECTI in its gross income and may claim a deduction for the $60 required to be distributed under section 651(a) to NRA. Pursuant to paragraph (d)(2)(iii) of this section, FT may claim a $14 credit under section 33 for the 1446 tax PRS paid ($40/$100 multiplied by $35). NRA is required to include the $60 of the ECTI in gross income under section 652 (as ECTI) and may claim a $21 credit under section 33 for the 1446 tax PRS paid ($35 less $14 or $60/$100 multiplied by $35).

Example 3. Complex trust that distributes entire ECTI to the beneficiary. Assume the same facts as in *Example 1,* except that FT is a complex trust under section 661. PRS distributes $60 to FT, which FT includes in its fiduciary accounting income. FT distributes the $60 of fiduciary accounting income to NRA and also properly distributes an additional $40 to NRA from FT's principal. FT will report the $100 of ECTI in its gross income and may deduct the $60 required to be distributed

to NRA under section 661(a)(1) and may deduct the $40 distributed to NRA under section 661(a)(2). Pursuant to paragraph (d)(2)(iii) of this section, FT may not claim a credit under section 33 for any of the $35 of 1446 tax paid by PRS. NRA is required to include $100 of the ECTI in gross income under section 662 (as ECTI) and may claim a $35 credit under section 33 for the 1446 tax paid by PRS ($35 less $0).

(e) *Liability of partnership for failure to withhold*—(1) *In general.* Every partnership required to pay 1446 tax is made liable for that tax by section 1461. Therefore, a partnership that is required to pay 1446 tax but fails to do so, or pays less than the amount required under this section, is liable under section 1461 for the payment of the tax required to be withheld under chapter 3 of the Internal Revenue Code and the regulations thereunder unless, and to the extent, the partnership can demonstrate pursuant to paragraph (e)(2) of this section, to the satisfaction of the Commissioner or his delegate, that a foreign partner has paid the full amount of tax required to be paid by such partner to the Internal Revenue Service. See paragraph (e)(3) of this section and section 1463 regarding a partnership's liability for penalties and interest even though a foreign partner has satisfied the underlying tax liability. See also §1.1461–3 for applicable penalties when a partnership fails to pay 1446 tax. See paragraph (b) of this section for an addition to the tax under section 6655 when there is an underpayment of 1446 tax.

(2) *Proof that tax liability has been satisfied and deemed payment of 1446 tax.* Proof of payment of tax may be established for purposes of paragraph (e)(1) of this section consistent with §1.1445–1(e)(3). Under that standard, a partnership must provide sufficient information to the IRS to determine that the partner's tax liability was satisfied or established to be zero in accordance with the rules of this section. Under this section, a partnership's liability for 1446 tax shall be deemed to have been satisfied (deemed payment), to the extent of the 1446 tax due with respect to the ECTI allocable to a foreign partner, on the later of the date that such partner is considered to have paid all tax that is required to be shown on such partner's U.S. income tax return under section 6513(a) and (b)(2) (prescribing the date tax is considered paid for purposes of sections 6511(b)(2), (c), and 6512), or the last date for payment of the 1446 tax without extensions (the unextended due date for Form 8804). The deemed payment rule of this paragraph (e)(2) shall apply for purposes sections of 1446, 1461, and 1463, and any additions to the tax, interest, or penalties potentially applicable to such partnership under section 1446, including sections 6601, 6651, and 6655. Any deemed payment of 1446 tax under this paragraph (e)(2) shall not be treated as a deemed distribution under section 1446(d) and this section.

(3) *Liability for interest, penalties, and additions to the tax*—(i) *Partnership.* Notwithstanding paragraph (e)(2) of this section, a partnership that fails to pay 1446 tax is not relieved from liability under section 6655 (as applied through this section) or for interest under section 6601, when applicable. See §1.1463–1. Such liability may exist even if there is no underlying tax liability due from a foreign partner on its allocable share of partnership ECTI. The addition to the tax under section 6655 or the interest charge under section 6601 that is required by those sections shall be imposed as set forth in those sections, as modified by this section. The section 6601 interest charge shall accrue beginning on the last date prescribed for payment of the 1446 tax due under section 1461 (which is the due date, without extensions, for filing Form 8804). The section 6601 interest charge shall stop accruing on the 1446 tax liability on the date, and to the extent, that the unpaid tax liability under section 1446 is satisfied (or is deemed satisfied under this paragraph (e)). Further, a partnership's liability under section 6655 (as applied through this section) for any underpaid installment payment shall accrue beginning on the relevant installment payment date, and shall stop accruing on the earlier of the date (and to the extent) that the 1446 tax liability is actually satisfied or the date prescribed in paragraph (b)(2)(v)(C) of this section. See paragraph (e)(4) of this section for examples illustrating that a partner's payment of estimated tax has no effect on the partnership's calculation of its

addition to the tax under section 6655 and this section. See § 1.1461–3 for a list of the additions to tax, interest, and penalties that may apply to a partnership that fails to comply with section 1446. See § 1.1446–6T for exceptions to the application of the addition to the tax under section 6655 (as applied through this section) when a partnership reasonably relies on a foreign partner's certificate to reduce 1446 tax.

(ii) *Foreign partner.* A foreign partner is permitted to reduce any addition to the tax under section 6654 or section 6655 by the amount of any section 6655 addition to the tax paid by the partnership with respect to the partnership's failure to pay adequate installment payments of the 1446 tax on ECTI allocable to the foreign partner.

(4) *Examples.* The following examples illustrate the application of this section. In considering the examples, disregard the potential application of paragraph (b)(2)(v)(F) of this section (relating to the *de minimis* exception to paying 1446 tax). Further, in each of the examples where a partnership is deemed to have paid 1446 tax with respect to ECTI allocable to a partner, it is assumed that the partnership has presented to the IRS the appropriate information under paragraph (e)(2) of this section for the IRS to conclude that the deemed payment is appropriate. The examples are as follows:

Example 1. Foreign partnership fails to pay 1446 tax and sole foreign partner fails to pay all tax required to be shown on partner's U.S. income tax return.

(i) PRS is a foreign partnership engaged in a trade or business in the United States and has two equal partners, A, a U.S. person, and B, a nonresident alien. PRS is described in § 1.6081–5(a) (PRS keeps its books and records outside the United States and Puerto Rico) and, therefore, is required to file Form 8804 by the 15th day of the 6th month following the close of its taxable year. Both partners and PRS are calendar year taxpayers. PRS has received a valid Form W–9 and W–8BEN from A and B, respectively, but has not received any other documents or certificates. B is engaged in multiple trades or businesses (including the PRS partnership) that give rise to effectively connected income. PRS will use an acceptable annualization method under this section for computing its 1446 tax.

(ii) In PRS's first year of operations (Year 1), PRS estimates for each installment period described in § 1.1446–3 that B will be allocated $100 of ordinary ECTI for the taxable year. Therefore, for each installment period PRS is required to pay one fourth of the tax on the annualized ECTI allocable to B, or $8.75 (.25 × ($100 × .35)). PRS fails to make any installment payments. PRS's operations actually result in $100 of ECTI allocated to B. Therefore, PRS was required to have paid 1446 tax of $35 on or before the due date, without extensions, for filing its Form 8804 which is June 15, Year 2 (the last date prescribed for payment of the 1446 tax). PRS does not file Forms 8804 or 8805.

(iii) B pays estimated taxes and makes the following payments on the following dates: June 15, Year 1—$20, September 15, Year 1—$15, and January 15, Year 2—$10. B's total estimated tax payments equal $45. B files its U.S. Federal income tax return timely on June 15, Year 2, and reports all effectively connected income required to be shown on its return. Assume that B's total correct tax liability as shown on the return is $50. B does not make a payment with its return and so B still owes $5 to the Internal Revenue Service (excluding any interest, penalties, and additions to the tax that may apply). Assume that B is not subject to an addition to the tax under section 6654.

(iv) Under the rules of paragraph (e)(2) of this section, for purposes of sections 1446, 1461, and 1463, PRS is not considered to have paid any 1446 tax because B has not paid all of B's U.S. income tax liability.

(v) Further, under the principles of section 6655 and the rules of § 1.1446–3(e), a partner's estimated tax payments will not affect the calculation of a partnership's addition to the tax. Accordingly, PRS will be liable under the principles of section 6655 and § 1.1446–3 for failing to withhold for each installment payment. The addition to the tax will accrue beginning with the due date of each installment payment on the $8.75 underpayment for each respective installment period and will continue to accrue until June 15, Year 2 (the date prescribed in paragraph (b)(2)(v)(C) of this section).

(vi) Further, beginning on June 15, Year 2 (the last date prescribed for payment of 1446 tax without extensions), PRS will be liable for interest under section 6601 with respect to the unpaid 1446 tax, $35. This interest will stop accruing on the earlier of the date that the 1446 tax is paid by PRS or is deemed paid under paragraph (e)(2) of this section by reason of B's payment of its full tax liability.

(vii) Further, beginning on June 15, Year 2 (the due date for filing Form 8804), PRS will be liable for the addition to the tax under section 6651(a)(1) for failing to file Form 8804. This addition to the tax accrues on the amount required to be shown as the 1446 tax liability on Form 8804, $35. This addition to the tax will accrue at the rate of 5 percent per month until the date that PRS files

Form 8804 for Year 1, or the maximum accrual of the penalty (25 percent of the tax required to be shown on the return) under that section has been reached.

(viii) PRS may be liable for other penalties and additions to the tax for its failure to withhold or to furnish statements to its foreign partner B. See §1.1461–3 for a list of the penalties that may apply.

Example 2. Foreign partnership fails to pay 1446 tax but sole foreign partner pays all tax required to be shown on the partner's U.S. income tax return. The facts are the same as *Example 1,* except that B pays $5 with the filing of B's return and has therefore paid all tax required to be shown on B's return within the meaning of paragraph (e)(2) of this section.

(i) For purposes of sections 1446, 1461, and 1463, PRS is deemed to have paid its 1446 tax liability under paragraph (e)(2) of this section as of the later of the date that B is considered to have paid its tax under section 6513(a) and (b)(2) (June 15, Year 2) and the last date for PRS to pay its 1446 tax without extensions (also June 15, Year 2). Therefore, PRS is deemed to have paid all of its 1446 tax liability as of June 15, Year 2. PRS has no continuing liability for 1446 tax under section 1461, however, additions to the tax, interest, and penalties may apply.

(ii) For purposes of section 6655 and §1.1446–3, under paragraph (e)(2) PRS is deemed to have paid its 1446 tax on June 15, Year 2. Even if B had fully paid its tax liability as of March 15, Year 2, the rule in paragraph (e)(2) of this section would not deem PRS to have paid its 1446 tax until June 15, Year 2. As a result, B's estimated tax payments will have no effect on PRS's calculation of its addition to the tax. The addition to the tax under 6655 and §1.1446–3 shall begin to accrue on each installment date with respect to the underpaid installment ($8.75), and will stop accruing on June 15, Year 2, the date prescribed in paragraph (b)(2)(v)(C) of this section.

(iii) Because PRS is deemed to have paid its full 1446 tax liability as of June 15, Year 2 (the last date prescribed for payment of 1446 tax without extensions), PRS is not subject to an interest charge under section 6601, or a failure to file penalty under section 6651 (see section 6651(b)(1)).

(iv) PRS may be liable for other penalties and additions to the tax for its failure to withhold or to furnish statements to its foreign partner B. See §1.1461–3 for a list of the penalties that may apply.

(v) If PRS had several foreign partners, PRS would conduct the same analysis as set forth above with respect to each partner. That is, under paragraph (e) of this section, PRS may be deemed to have paid 1446 tax with respect to the ECTI allocable to some but not all of its foreign partners.

Example 3. Domestic partnership fails to pay 1446 tax but sole foreign partner fully pays all tax required to be shown on partner's U.S. income tax return. The facts are the same as *Example 2,* except that PRS is a domestic partnership whose last date prescribed for paying 1446 tax without extensions (*i.e.,* generally the unextended due date for Form 8804) is April 15, Year 2.

(i) For purposes of sections 1446, 1461, and 1463, PRS is deemed to have paid its 1446 tax liability on the later of the date that B is considered to have paid tax under section 6513(a) and (b)(2) (June 15, Year 2) and the last date for paying 1446 tax without extensions (*i.e.,* the unextended due date for Form 8804, April 15, Year 2). Accordingly, PRS is not considered to have fully paid its 1446 tax liability until June 15, Year 2. PRS has no continuing liability for 1446 tax under section 1461, however, additions to the tax, interest, and penalties may apply.

(ii) For purposes of section 6655 and §1.1446–3, PRS is subject to an underpayment addition to the tax that accrues on the same amount as in *Example 1* and *Example 2* because PRS is not deemed to have paid 1446 tax under paragraph (e)(2) of this section until June 15, Year 2. The addition to the tax will stop accruing on the date prescribed in paragraph (b)(2)(v)(C) of this section (*i.e.,* April 15, Year 2, the due date, without extensions, for filing Form 8804).

(iii) For purposes of section 6601, as of the last date prescribed for paying 1446 tax without extensions (April 15, Year 2), PRS has not paid or been deemed to have paid any 1446 tax. Accordingly, the interest charge under section 6601 shall begin to accrue on April 15, Year 2, and shall accrue until the 1446 liability is paid or deemed to have been paid. In this case, the interest charge will accrue until June 15, Year 2, the date that PRS is deemed to have paid its 1446 tax under paragraph (e)(2) of this section.

(iv) For purposes of section 6651(a)(1), as of April 15, Year 2, PRS's amount required to be shown as tax on its Form 8804 is $35. This amount cannot be reduced under section 6651(b)(1) because PRS is not deemed to have paid 1446 tax under paragraph (e)(2) of this section until June 15, Year 2, a date falling after the last date for PRS to pay its 1446 tax, April 15, Year 2. Accordingly, the failure to file penalty will begin to accrue on April 15, Year 2 (filing due date for Form 8804), and shall stop accruing on the earlier of the date that PRS files Form 8804 or the maximum accrual of the penalty (25 percent of the amount required to be shown as tax on the return) is reached.

(v) PRS may be liable for other penalties and additions to the tax for its failure to withhold or to furnish statements to its foreign partner B. See §1.1461–3 for a list of the penalties that may apply.

(f) *Effect of withholding on partner.* The payment of the 1446 tax by a partnership does not excuse a foreign partner to which a portion of ECTI is allocable from filing a U.S. tax or informational return, as appropriate, with respect to that income. Information concerning installment payments of 1446 tax paid during the partnership's taxable year on behalf of a foreign partner shall be provided to such foreign partner in accordance with paragraph (d) of this section and such information may be taken into account by the foreign partner when computing the partner's estimated tax liability during the taxable year. Form 1040NR, ''U.S. Nonresident Alien Income Tax Return,'' Form 1065, ''U.S. Return of Partnership Income,'' Form 1120F, ''U.S. Income Tax Return of a Foreign Corporation,'' or such other return as appropriate, must be filed by the partner, and any tax due must be paid, by the filing deadline (including extensions) generally applicable to such person. Pursuant to paragraph (d) of this section, a partner may generally claim a credit under section 33 for its share of any 1446 tax paid by the partnership against the amount of income tax (or 1446 tax in the case of tiers of partnerships) as computed in such partner's return. See §1.1446–3(e)(3)(ii) for rules permitting a partner to reduce its addition to tax under section 6654 or section 6655.

[T.D. 9200, 70 FR 28717, May 18, 2005]

§1.1446–4 Publicly traded partnerships.

(a) *In general.* This section sets forth rules for applying the section 1446 withholding tax (1446 tax) to publicly traded partnerships. A publicly traded partnership (as defined in paragraph (b) of this section) that has effectively connected gross income, gain or loss must pay 1446 tax by withholding from distributions to a foreign partner. Publicly traded partnerships that withhold on distributions must pay over and report any 1446 tax as provided in paragraph (c) of this section, and generally are not to pay over and report the 1446 tax under the rules in §1.1446–3. The amount of the withholding tax on distributions, other than distributions excluded under paragraph (f) of this section, that are made during any partnership taxable year, equals the applicable percentage (defined in paragraph (b)(2) of this section) of such distributions. For penalties and additions to the tax for failure to comply with this section, see §§1.1461–1 and 1.1461–3.

(b) *Definitions*—(1) *Publicly traded partnership.* For purposes of this section, the term publicly traded partnership has the same meaning as in section 7704 (including the regulations thereunder), but does not include a publicly traded partnership treated as a corporation under that section.

(2) *Applicable percentage.* For purposes of this section, applicable percentage shall have the meaning as set forth in §1.1446–3(a)(2), except that the partnership or nominee required to pay 1446 tax may not consider a preferential rate in computing the 1446 tax due with respect to a partner.

(3) *Nominee.* For purposes of this section, the term nominee means a domestic person that holds an interest in a publicly traded partnership on behalf of a foreign person.

(4) *Qualified notice.* For purposes of this section, a qualified notice is a notice given by a publicly traded partnership regarding a distribution that is attributable to effectively connected income, gain or loss of the partnership, and in accordance with the notice requirements with respect to dividends described in 17 CFR 240.10b–17(b)(1) or (3) issued pursuant to the Securities Exchange Act of 1934 (15 U.S.C. 78a). See paragraph (d) of this section regarding when a nominee is considered to have received a qualified notice.

(c) *Paying and reporting 1446 tax.* The withholding tax required under this section is to be paid pursuant to the rules and procedures of section 1461, §§1.1461–1, 1.1461–2, and 1.6302–2, as supplemented by the rules of this section. However, the reimbursement and set-off procedures set forth in §1.1461–2 shall not apply. A withholding agent under this section must use Form 1042, ''Annual Withholding Tax Return for U.S. Source Income of Foreign Persons,'' and Form 1042–S, ''Foreign Person's U.S. Source Income Subject to Withholding,'' to report withholding from distributions under this section. See §1.1461–1(b). Further, a withholding

agent under this section may obtain a refund for 1446 tax paid in accordance with section 1464 and the regulations thereunder. See §1.1446–3(d)(1)(iv) and (vii) (relating to a foreign trust or estate that holds an interest in a publicly traded partnership) and §1.1446–5(d) (relating to a publicly traded partnership that is part of a tiered partnership structure) for additional guidance.

(d) *Rules for designation of nominees to withhold tax under section 1446.* A nominee that receives a distribution from a publicly traded partnership subject to withholding under this section, and which is to be paid to (or for the account of) any foreign person, may be treated as a withholding agent under this section. A nominee is treated as a withholding agent under this section only to the extent of the amount specified in the qualified notice (as defined in paragraph (b)(4) of this section) received by the nominee. A nominee is treated as receiving a qualified notice at the time such notice is published in accordance with 17 CFR 240.10b–17(b)(1) or (3). Where a nominee is designated as a withholding agent with respect to a foreign partner of the partnership, the obligation to withhold on distributions to such foreign partner in accordance with the rules of this section shall be imposed solely on the nominee. A nominee responsible for withholding under the rules of this section shall be subject to liability under sections 1461 and 6655, as well as all applicable penalties and interest, as if such nominee was a partnership responsible for withholding under this section.

(e) *Determining foreign status of partners.* The rules of §1.1446–1 shall apply in determining whether a partner of a publicly traded partnership is a foreign partner for purposes of the 1446 tax. A partnership or nominee obligated to withhold under this section shall be entitled to rely on any of the forms acceptable under §1.1446–1 received from persons on whose behalf it holds interests in the partnership to the same extent a partnership is entitled to rely on such forms under those rules.

(f) *Distributions subject to withholding*—(1) *In general.* Except as provided in this paragraph (f)(1), a publicly traded partnership must withhold at the applicable percentage with respect to any actual distribution made to a foreign partner. The amount of a distribution subject to 1446 tax includes the amount of any 1446 tax required to be withheld on the distribution. In the case of a partnership (upper-tier partnership) that receives a partnership distribution from another partnership in which it is a partner (lower-tier partnership) (*i.e.*, a tiered structure described in §1.1446–5), any 1446 tax that was paid by the lower-tier partnership may be credited by the upper-tier partnership and shall be treated as a distribution under section 1446. For example, a foreign publicly traded partnership, UTP, owns an interest in domestic publicly traded partnership, LTP. LTP makes a distribution subject to section 1446 of $100 to UTP during its taxable year beginning January 1, 2005, and withholds 35 percent (the highest rate in section 1)($35) of that distribution under section 1446. UTP receives a net distribution of $65 which it immediately redistributes to its partners. UTP has a liability to pay 35 percent of the total actual and deemed distribution it makes to its foreign partners as a section 1446 withholding tax. UTP may credit the $35 withheld by LTP against this liability as if it were paid by UTP. See §1.1462–1(b) and §1.1446–5(b)(1). When UTP distributes the $65 it actually receives from LTP to its partners, UTP is treated for purposes of section 1446 as if it made a distribution of $100 to its partners ($65 actual distribution and $35 deemed distribution). UTP's partners (U.S. and foreign) may claim a credit against their U.S. income tax liability for their allocable share of the $35 of 1446 tax paid on their behalf.

(2) *In-kind distributions.* If a publicly traded partnership distributes property other than money, the partnership shall not release the property until it has funds sufficient to enable the partnership to pay over in money the required 1446 tax.

(3) *Ordering rule relating to distributions.* Distributions from publicly traded partnerships are deemed to be paid out of the following types of income in the order indicated—

(i) Amounts attributable to income described in section 1441 or 1442 that are not effectively connected, without

regard to whether such amounts are subject to withholding because of a treaty or statutory exemption;

(ii) Amounts effectively connected with a U.S. trade or business, but not subject to withholding under section 1446 (*e.g.*, amounts exempt by treaty);

(iii) Amounts subject to withholding under section 1446; and

(iv) Amounts not listed in paragraphs (f)(3)(i) through (iii) of this section.

(4) *Coordination with section 1445(e)(1).* Except as otherwise provided in this section, a publicly traded partnership that complies with the requirements of withholding under section 1446 and this section will be deemed to have satisfied the requirements of section 1445(e)(1) and the regulations thereunder. Notwithstanding the excluded amounts set forth in paragraph (f)(3) of this section, distributions subject to withholding at the applicable percentage shall include the following—

(i) Amounts subject to withholding under section 1445(e)(1) upon distribution pursuant to an election under § 1.1445–5(c)(3) of the regulations; and

(ii) Amounts not subject to withholding under section 1445 because the distributee is a partnership or is a foreign corporation that has made an election under section 897(i).

[T.D. 9200, 70 FR 28717, May 18, 2005]

§ 1.1446–5 Tiered partnership structures.

(a) *In general.* The rules of this section shall apply in cases where a partnership (lower-tier partnership) that has effectively connected taxable income (ECTI), has a partner that is a partnership (upper-tier partnership). Except as provided in paragraph (e) of this section, if an upper-tier domestic partnership directly owns an interest in a lower-tier partnership, the lower-tier partnership is not required to pay the section 1446 withholding tax (1446 tax) with respect to the upper-tier partnership's allocable share of net income, regardless of whether the upper-tier domestic partnership's partners are foreign. Paragraph (b) of this section prescribes the reporting requirements for upper-tier and lower-tier partnerships subject to section 1446. Paragraph (c) of this section prescribes rules requiring a lower-tier partnership to look through an upper-tier foreign partnership to a partner of such upper-tier partnership to the extent it has sufficient documentation to determine the status of such partner and determine such partner's indirect share of the lower-tier partnership's effectively connected taxable income (ECTI). Paragraph (d) of this section prescribes rules applicable to a publicly traded partnership in a tiered partnership structure. Paragraph (e) of this section prescribes rules permitting a domestic upper-tier partnership to elect to apply the look through rules of paragraph (c) of this section. Paragraph (f) of this section sets forth examples illustrating the rules of this section.

(b) *Reporting requirements*—(1) *In general.* Notwithstanding paragraph (c) of this section, to the extent that an upper-tier partnership that is a foreign partnership is a partner in a lower-tier partnership, and the lower-tier partnership has paid 1446 tax (including installment payments of such tax) with respect to ECTI allocable to the upper-tier partnership, the lower-tier partnership shall comply with §§ 1.1446–1 through 1.1446–3 and provide the upper-tier partnership notice of such payments and a copy of the statements and forms filed with respect to the upper-tier partnership's interest in the lower-tier partnership (*e.g.*, Form 8805, ''Foreign Partner's Information Statement of Section 1446 Withholding Tax''). The upper-tier partnership may treat the 1446 tax (or any installment of such tax) paid by the lower-tier partnership on its behalf as a credit against its liability to pay 1446 tax (or any installment of such tax), as if the upper-tier partnership actually paid over the amounts at the time that the amounts were paid by the lower-tier partnership. See § 1.1462–1(b) and § 1.1446–3(d). To the extent required in § 1.1446–3(d)(1)(iii), the upper-tier partnership will file Form 8804, ''Annual Return for Partnership Withholding Tax (Section 1446),'' and Form 8805, ''Foreign Partner's Information Statement of Section 1446 Withholding Tax,'' for each of its foreign partners with respect to its 1446 tax obligation. To the extent the upper-tier partnership does not claim a refund of the 1446 tax it paid (or is considered to have paid), the upper-tier

partnership will pass the credit for the 1446 tax paid to its partners on the Forms 8805 it issues. See §1.1446–3(d). The rules of this paragraph (b) shall apply to an upper-tier and lower-tier partnership to the extent that an election has been made and consented to under paragraph (e) of this section.

(2) *Publicly traded partnerships.* In the case of an upper-tier foreign partnership that is a publicly traded partnership, the rules of §1.1446–4(c) shall apply. See also paragraph (d) of this section.

(c) *Look through rules for foreign upper-tier partnerships.* For purposes of computing the 1446 tax obligation of a lower-tier partnership, if an upper-tier foreign partnership owns an interest in the lower-tier partnership, the upper-tier partnership's allocable share of ECTI from the lower-tier partnership shall be treated as allocable to a partner of the upper-tier partnership, to the extent of such partner's indirect share of such ECTI (as if such partner were a direct partner in the lower-tier partnership), if—

(1) The upper-tier foreign partnership furnishes the lower-tier partnership a valid Form W–8IMY, ''Certificate of Foreign Intermediary, Flow Through Entity, or Certain U.S. Branches for United States Tax Withholding,'' indicating that it is a look-through foreign partnership for purposes of section 1446; and

(2) The lower-tier partnership can reliably associate (within the meaning of §1.1441–1(b)(2)(vii)) effectively connected partnership items allocable to the upper-tier partnership (and indirectly to such partner) with a Form W–8 (*e.g.*, Form W–8BEN), Form W–9, ''Request for Taxpayer Identification Number and Certification,'' or other form acceptable under §1.1446–1, establishing the status of such partner provided by the upper-tier partnership. The principles of §1.1441–1(b)(2)(vii) shall apply to determine whether a lower-tier partnership can reliably associate effectively connected partnership items allocable to the upper-tier partnership with a partner of the upper-tier partnership. To the extent the lower-tier partnership receives a valid Form W–8IMY from the upper-tier partnership but cannot reliably associate a portion of the upper-tier partnership's allocable share of effectively connected partnership items with a partner of such upper-tier partnership, then the lower-tier partnership shall pay 1446 tax on such portion at the higher of the applicable percentages in section 1446(b). See §1.1446–3(a)(2) for the treatment of any income or gain potentially subject to a preferential rate. If a lower-tier partnership has not received a valid Form W–8IMY from the upper-tier partnership, the lower-tier partnership shall withhold on the upper-tier partnership's entire allocable share of ECTI at the higher of the applicable percentages in section 1446(b). The look through regime set forth in this paragraph (c) is for purposes of computing the lower-tier partnership's 1446 tax obligation only and does not alter the persons considered to be partners in the lower-tier partnership for partnership reporting purposes (*e.g.*, issuing Form 8805, Schedule K–1).

(d) *Publicly traded partnerships*—(1) *Upper-tier publicly traded partnership.* The rules set forth in paragraph (c) shall not apply to look through an upper-tier partnership whose interests are publicly traded (as defined in §1.1446–4(b)(1)).

(2) *Lower-tier publicly traded partnership.* The look through rules of paragraph (c) of this section shall apply, if the requirements of that paragraph are met, to a lower-tier partnership that is a publicly traded partnership within the meaning of §1.1446–4(b)(1) only if the upper-tier partnership is not described in paragraph (d)(1) of this section. For example, a lower-tier publicly traded partnership (or nominee) shall look through an upper-tier foreign partnership (or domestic partnership to the extent an election is made and consented to under paragraph (e) of this section) when computing its 1446 tax liability, provided the upper-tier partnership is not a publicly traded partnership and the appropriate documentation needed to satisfy the standards set forth in §1.1441–1(b)(2)(vii) and paragraph (c) of this section have been furnished.

(e) *Election by a domestic upper-tier partnership to apply look through rules*—(1) *In general.* Subject to the rules of

this paragraph (e), a domestic partnership that is a partner in a lower-tier partnership may elect to apply the rules of this section 1.1446–5 and have the lower-tier partnership look through such upper-tier partnership to the partners of such domestic partnership for purposes of computing the lower-tier partnership's 1446 tax liability. A domestic partnership shall make this election by attaching to the Form W–9 submitted to the lower-tier partnership, a written statement and information (described in paragraph (e)(2) of this section) that identifies the upper-tier partnership as a domestic partnership and that states that such partnership is making the election under this paragraph (e). This paragraph (e)(1) shall not apply to a publicly traded partnership described in § 1.1446–4(b)(1). See paragraph (d)(1) of this section.

(2) *Information required for valid election statement.* In addition to the requirements of paragraphs (e)(1) and (3) of this section, the election statement submitted under this paragraph (e)(2) is not valid and cannot be accepted by the lower-tier partnership pursuant to paragraph (e)(3) of this section unless the upper-tier partnership attaches valid documentation pursuant to § 1.1446–1 (*e.g.,* Form W–8BEN) with respect to one or more of its foreign partners. The information and documentation submitted with the election must comply with the rules of this section to permit the lower-tier partnership to reliably associate (within the meaning of § 1.1441–1(b)(2)(vii)) at least a portion of the upper-tier partnership's allocable share of ECTI with one or more foreign partners of the upper-tier partnership. The election statement must identify the upper-tier partnership by name, address, and TIN, and specify the percentage interest the domestic partnership holds in the lower-tier partnership. The statement may also include such information the upper-tier partnership deems necessary to enable the lower-tier partnership to apply the provisions of this section. If at any time the upper-tier partnership determines that the information or documentation previously provided to the lower-tier partnership is no longer correct, the upper-tier partnership shall update such information and documentation. Except as provided in paragraph (e)(3) of this section, an election that is effective under this paragraph (e) shall apply for subsequent taxable years until such upper-tier partnership revokes the election in writing. A revocation under this section shall be effective for any installment due date arising more than 15 days subsequent to the date that the lower-tier partnership receives such revocation.

(3) *Consent of lower-tier partnership.* An election made under this paragraph (e) is not effective until the lower-tier partnership consents in writing to the upper-tier partnership that it agrees to apply the provisions of this section. A lower-tier partnership may not consent to an election submitted under this paragraph (e) for any installment date or Form 8804 filing date arising within 15 days of the lower-tier partnership's receipt of such election. The lower-tier partnership's written consent must specify the extent to which it will look through the upper-tier partnership in computing its 1446 tax (or any installment of such tax). To the extent that the lower-tier partnership does not consent to an election to apply the look through provisions of paragraph (c) of this section, the lower-tier partnership shall consider such portion of the upper-tier partnership's allocable share of ECTI as allocable to a domestic person for purposes of computing its 1446 tax obligation. A lower-tier partnership that has consented to an election under this paragraph (e) may revoke or modify its consent, in writing, at any time.

(f) *Examples.* The following examples illustrate the provisions of this section. In considering the examples, disregard the potential application of § 1.1446–3(b)(2)(v)(F) (relating to the *de minimis* exception to paying 1446 tax). The examples are as follows:

Example 1. Sufficient documentation—tiered partnership structure. (i) Nonresident alien (NRA) and foreign corporation (FC) are partners in PRS, a foreign partnership, and share profits and losses in PRS 70 and 30 percent, respectively. All of PRS's partnership items are allocated based upon each partner's respective ownership interest and it is assumed that these allocations are respected under section 704(b) and the regulations thereunder. NRA and FC each furnish PRS with a valid Form W–8BEN establishing themselves

as a foreign individual and foreign corporation, respectively. PRS holds a 40 percent interest in the profits, losses and capital of LTP, a lower-tier partnership. NRA holds the remaining 60 percent interest in profits, losses and capital of LTP. All of LTP's partnership items are allocated based upon each partner's respective ownership interest and it is assumed that these allocations are respected under section 704(b) and the regulations thereunder. LTP has $100 of annualized ECTI for the relevant installment period. All of this income is ordinary income and there is no potential application of a preferential rate applicable percentage under §1.1446–3(a)(2). Further, §1.1446–6T does not apply. PRS has no income other than the income allocated from LTP. PRS provides LTP with a valid Form W–8IMY indicating that it is a foreign partnership and attaches the valid Form W–8BENs executed by NRA and FC, as well as a statement describing the allocation of PRS's effectively connected items among its partners. The information that PRS submits to LTP is sufficient to permit LTP to reliably associate (within the meaning of §1.1441–1(b)(2)(vii)) PRS's allocable share of effectively connected items with NRA and FC pursuant to this section. Further, NRA provides a valid Form W–8BEN to LTP.

(ii) LTP must pay 1446 tax on the $60 allocable to its direct partner NRA using the applicable percentage for non-corporate partners (the highest rate in section 1).

(iii) With respect to the effectively connected partnership items that LTP can reliably associate with NRA through PRS (70 percent of PRS's 40 percent allocable share ($40), or $28), LTP will pay 1446 tax on NRA's allocable share of LTP's ECTI (as determined by looking through PRS) using the applicable percentage for non-corporate partners (the highest rate in section 1).

(iv) With respect to the effectively connected partnership items that LTP can reliably associate with FC through PRS (30 percent of PRS's 40 percent allocable share ($40), or $12), LTP will pay 1446 tax on FC's allocable share of LTP's ECTI (as determined by looking through PRS) using the applicable percentage for corporate partners (the highest rate in section 11).

(v) LTP's payment of the 1446 tax is treated as a distribution to NRA and PRS, its direct partners, that those partners may credit against their respective tax obligations. PRS will report its 1446 tax obligation with respect to its direct foreign partners, NRA and FC, on the Form 8804 and Forms 8805 that it files with the Internal Revenue Service pursuant to paragraph (b) of this section and will credit the amount withheld by LTP on its Form 8804. This credit will satisfy PRS's 1446 tax liability as reported on the Form 8804 it files because PRS's only income is from LTP, and LTP paid 1446 tax with respect to all of PRS's allocable share in LTP by looking through to PRS's partners NRA and FC. Further, PRS will pass along the credit for the 1446 tax withheld by LTP to its partners, NRA and FC on the Form 8805 issued to each partner. The credit passed to each partner on Form 8805 will be treated as a distribution to the respective partners under section 1446(d).

Example 2. Insufficient documentation—tiered partnership structure. (i) LTP is a domestic partnership that has two equal partners A and PRS. A is a nonresident alien and PRS is a foreign partnership that has two equal foreign partners, C and D. Neither A nor PRS provides LTP with a valid Form W–8 or Form W–9. Neither C nor D provides PRS with a valid Form W–8 or Form W–9. Pursuant to §1.1446–1(c)(3), LTP must presume that PRS is a foreign person subject to withholding under section 1446 at the higher of the highest rate under section 1 or section 11(b)(1). LTP has also not received any documentation with respect to A. LTP must presume that A is a foreign person, and, if LTP knows that A is an individual, compute and pay 1446 tax, subject to §1.1446–3(a)(2), based on that knowledge.

(ii) Assume a change of facts where C provides a form W–8 (*e.g.*, Form W–8BEN) to PRS, and PRS in turn, furnishes that form to LTP along with its Form W–8IMY, and information regarding how effectively connected items are allocated to C and D. Based upon the additional facts, LTP can reliably associate one-half of PRS's allocable share of ECTI with documentation related with C. Therefore, under paragraph (c)(2) of this section, LTP will look through PRS to C when computing its 1446 tax to the extent of C's indirect share and will not look through with respect to the remainder of PRS's allocable share (D's indirect share).

[T.D. 9200, 70 FR 28717, May 18, 2005]

§ 1.1446–6T Special rules to reduce a partnership's 1446 tax with respect to a foreign partner's allocable share of effectively connected taxable income (Temporary).

(a) *In general.* The rules of this section describe when a partnership required to pay withholding tax under section 1446 (1446 tax), or any installment of such tax, may consider certain partner-level deductions and losses in computing its 1446 tax obligation under §1.1446–3, or otherwise may not be required to pay a *de-minimis* amount of 1446 tax with respect to a nonresident

alien partner. A partnership determines the applicability of this section on a partner-by-partner basis for each installment period and when completing its Form 8804, ''Annual Return for Partnership Withholding Tax (Section 1446),'' and paying 1446 tax for the partnership taxable year. When applicable, the rules of this section permit a foreign partner to whom this section applies (within the meaning of paragraph (b) of this section) to furnish a certificate to the partnership that sets forth the deductions and losses that are connected with, or properly allocated and apportioned to, as the case may be, gross income that is effectively connected with the partner's U.S. trade or business and that such foreign partner reasonably expects to be available for the partner's taxable year to reduce the partner's U.S. income tax liability on the partner's allocable share of effectively connected income or gain from the partnership. The rules of this section also permit a partner to represent that the partner's investment in the partnership is (and will be) the partner's only investment or activity that will give rise to effectively connected items for the partner's taxable year. To apply the rules of this section, a partner must submit a new certificate for each partnership taxable year. Paragraph (c) of this section sets forth the deductions and losses that a partner may certify as reasonably expected to be available to such partner for the partner's taxable year, and sets forth rules regarding the partner's representation that the partnership investment is the partner's only activity giving rise to effectively connected items. Paragraph (c) of this section also sets forth requirements for a foreign partner's certificate to be valid. Paragraph (d) of this section provides rules regarding when a partnership may rely on and consider a foreign partner's certificate in computing its 1446 tax, and the effect of relying on such a certificate. Paragraph (d) of this section also provides rules regarding how a partnership must handle any certificate or updated certificate received pursuant to this section. Paragraph (e) of this section sets forth examples that illustrate the rules of this section.

(b) *Foreign partner to whom this section applies*—(1) *In general.* Subject to paragraph (b)(2) of this section, a foreign partner to whom this section applies is a foreign partner that has provided valid documentation to the partnership to whom a certificate is submitted under this section in accordance with §1.1446–1, has timely filed or will timely file a Federal income tax return in the United States in each of the partner's preceding four taxable years and the partner's taxable year(s) during which the certificate under this section is considered, and has timely paid (or will timely pay) all tax shown on such returns. This section shall not apply to a partner in a publicly traded partnership subject to §1.1446–4.

(2) *Special rules.* Notwithstanding paragraph (b)(1) of this section:

(i) In the case of a domestic or foreign partnership (upper-tier partnership) that is a partner in another partnership (lower-tier partnership), this section may apply to reduce or eliminate the 1446 tax (or any installment of such tax) of the lower-tier partnership with respect to a foreign partner of the upper-tier partnership only to the extent the provisions of §1.1446–5 apply to look-through the upper-tier partnership to the foreign partner of such upper-tier partnership and the certificate described in paragraph (c) of this section is provided by such foreign partner to the upper-tier partnership and, in turn, provided to the lower-tier partnership with other appropriate documentation. See §1.1446–5(c) and (e). Absent the application of §1.1446–5(c), the upper-tier partnership may not submit a certificate of deductions and losses to the lower-tier partnership.

(ii) This section shall not apply to a partner that is a foreign estate.

(iii) This section shall not apply to a partner that is a domestic or foreign trust, except to the extent that such trust is owned by a grantor or other person under subpart E of subchapter J of the Internal Revenue Code, the documentation requirements of §1.1446–1 have been met by the grantor or other owner of such trust, and the certificate described in paragraph (c) of this section is provided by the grantor or other owner of such trust to the partnership.

(c) *Certificate to reduce 1446 tax with respect to a foreign partner*—(1) *In general.* Subject to the rules of this section, a foreign partner may certify under paragraph (c)(1)(i) or (ii) of this section to a partnership for a partnership taxable year of such partnership that it has deductions and losses that the partner reasonably expects to be available to reduce the partner's U.S. income tax liability on the partner's allocable share of effectively connected income or gain from the partnership. Among other requirements, exceptions, and limitations set forth in paragraphs (c)(1)(i), (ii), and (iii) of this section, the foreign partner must generally represent that such deductions and losses have been (or will be) reflected on a timely filed U.S. income tax return of the partner for a taxable year that ends prior to the installment due date or Form 8804 filing date (without regard to extensions) for the partnership taxable year for which the certificate is considered (*i.e.*, no anticipated deduction or loss with respect to the partner's current year operations may be considered). A partner may also certify pursuant to paragraph (c)(1)(iv) of this section that the partner's only investment or activity giving rise to effectively connected items for the partner's taxable year is (and will be) the partner's investment in the partnership. A foreign partner's certificate to a partnership under this section must be in accordance with the form and requirements set forth in paragraph (c)(2)(ii) of this section.

(i) *Deductions and losses from the partnership from prior taxable years.* Under this section, a partner may certify that it has deductions and losses (certified deductions and losses), other than charitable deductions, from the partnership that the partner reasonably expects to be available to reduce the partner's U.S. income tax liability on the partner's allocable share of effectively connected income or gain from the partnership for the partner's taxable year. The certified deductions and losses must be reflected on a Schedule K–1 issued (or to be issued) to the partner by the partnership for a prior partnership taxable year. A partner that has a loss that is set forth on a Schedule K–1 the partnership issued for a prior year, but is not reflected on any of the partner's prior year returns because the loss is suspended under section 704(d) and, therefore, not deductible, may certify such loss to the partnership. Further, the foreign partner must certify that the deductions and losses are connected with (or, in the case of a corporate partner, allocated and apportioned to) gross income which is effectively connected (or treated as effectively connected) with the conduct of the partner's trade or business in the United States. In addition, the certificate must contain the information and representations set forth in paragraph (c)(2)(ii) of this section.

(ii) *Deductions and losses from sources other than the partnership from prior taxable years.* Under this section, a foreign partner may certify that it has deductions and losses, other than charitable deductions, from sources other than the partnership that the partner reasonably expects to be available to reduce the partner's U.S. income tax liability on the partner's allocable share of effectively connected income or gain from the partnership for the taxable year. The foreign partner must certify that the deductions and losses are connected with (or, in the case of a corporate partner, allocated and apportioned to) gross income which is effectively connected (or treated as effectively connected) with the conduct of the partner's trade or business in the United States. To the extent the deductions and losses certified under this paragraph (c)(1)(ii) arise from the partner's investment in another partnership, such deductions and losses must be reflected on a Schedule K–1 issued (or to be issued) to the partner by such other partnership for a prior taxable year of such other partnership that ends prior to the installment due date or Form 8804 filing date (without regard to extensions) of the partnership for the partnership taxable year for which the certificate is considered. Further, the partner may not certify to the partnership a loss suspended under section 704(d) from such other partnership. In addition, the certificate must contain the information and representations set forth in paragraph (c)(2)(ii) of this section.

(iii) *Limit on the consideration of a partner's net operating loss deduction.* A partnership may not consider a partner's net operating loss deduction certified under this section in an amount greater than 90 percent of the partner's allocable share of ECTI.

(iv) *Certificate of nonresident alien partner that partnership investment is partner's only activity giving rise to effectively connected items.* Under this section, a nonresident alien partner whose only activity giving rise to effectively connected income, gain, deduction, or loss for the partner's taxable year is (and will be) the partner's investment in the partnership, may certify this fact to the partnership. Except as otherwise provided in this paragraph (c)(1)(iv), a certificate submitted under this paragraph is generally subject to all of the applicable requirements and rules of this section (*e.g.*, the partner's preceding four years U.S. income tax returns are (or will be) timely filed, a new certificate is submitted for each partnership year, the time requirements for submitting the certificate are met, the certificate is signed under penalties of perjury). A partnership that receives a certificate from a nonresident alien partner under this paragraph (c)(1)(iv) is not required to pay 1446 tax (or any installment of such tax) with respect to such partner if the partnership estimates that the annualized (or, in the case of a partnership completing its Form 8804, the actual) 1446 tax due with respect to such partner is less than $1,000. For purposes of computing the annualized or actual 1446 tax due with respect to such partner under the previous sentence, the partnership may not consider any of the partner's deductions and losses certified under paragraph (c)(1)(i) or (ii) of this section. In addition to the requirements of paragraph (c)(2) of this section, a nonresident alien partner must notify the partnership in writing and revoke its certificate submitted under this paragraph (c)(1)(iv) within 10 days of the date that the partner invests, or otherwise engages in, an activity that may give rise to effectively connected income, gain, deduction, or loss for the partner's taxable year. A partnership may reasonably rely on a partner's statement under the rules of paragraph (d) of this section and generally will be relieved of an addition to the tax under section 6655 as applied through this section, however, the partnership shall remain liable for the 1446 tax (or any installment of such tax), and any applicable additions to the tax (other than the addition to the tax under section 6655 as applied through this section), interest, and penalties under such paragraph, if the partner's certificate is later determined to be defective. The IRS may determine under the rules of this section, in its sole discretion, that the partner's certificate is defective within the meaning of paragraph (c)(3) of this section and notify the partnership in accordance with the rules of this section.

(2) *Time and form of certification*—(i) *Time for certification provided to partnership*—(A) *First certificate submitted for a partnership's taxable year.* Provided the other requirements of this section are met, the first certificate a foreign partner furnishes with respect to a partnership's taxable year shall not be relied upon for any installment due date, or Form 8804 filing due date (without regard to extensions), arising within 30 days of the date that the partnership receives such certificate. For example, a calendar year domestic partnership must generally receive a certificate under this section from a foreign partner on or before March 16th for the partnership to consider it for its first installment due date of 1446 tax on April 15th. If the foreign partner's first certificate for the partnership's current taxable year is received on April 10th, the partnership may not consider such certificate until the partnership's second installment due date of June 15th. See §1.1446–3 for 1446 tax installment due dates. See also paragraph (e) of this section for examples illustrating the rules of this paragraph (c)(2).

(B) *Updated certificates and status updates*—(*1*) *Foreign partner's prior year tax returns not yet filed.* If a foreign partner's U.S. Federal income tax return for a preceding taxable year has not been filed at the time that the partner submits its first certificate under this paragraph (c) to the partnership for a partnership taxable year, the partner

shall specify this fact, set forth the filing due date for such return to the partnership in accordance with paragraph (c)(2)(ii) of this section, and submit an updated certificate in accordance with this paragraph (c) no later than 10 days after the date that the partner timely files its U.S. Federal income tax return for any such taxable year. If a prior year return has not been filed under the previous sentence, the partner shall provide the partnership a status update with respect to any unfiled prior year return, which must be received by the partnership at least 10 days prior to the partnership's final installment due date. The status update must be submitted under penalties of perjury and shall set forth the filing due date for any unfiled return identified in the first certificate and indicate whether the partner's first certificate submitted for the taxable year may continue to be considered. A status update shall apply only with respect to the timely filing of a partner's prior year tax returns. If the partnership does not receive an updated certificate (that includes the information required by this paragraph (c) for a status update) or a status update from the partner at least 10 days prior to the partnership's final installment due date, the partnership shall disregard the partner's certificate for the fourth installment period and when completing its Form 8804 for the taxable year and no additional certificate may be submitted or substituted for such disregarded certificate. Notwithstanding the previous sentence, if the partner can meet the requirements of this section for the next year, the partner may submit a certificate under this section.

(*2*) Other circumstances requiring a foreign partner to submit an updated certificate. Notwithstanding paragraph (c)(2)(i)(B)(*1*) of this section, if at any time the partner estimates that it reasonably expects to have available deductions and losses in an amount less than the corresponding amounts set forth on the most recent certificate furnished to the partnership for the partnership taxable year, then, within 10 days of such determination, the foreign partner shall submit an updated certificate under this paragraph (c) to the partnership. Similarly, if at any time the partner determines that its certificate is incorrect, other than by reason of the preceding sentence (*e.g.*, the character of a certified loss is capital rather than ordinary), then such partner shall update its certificate within 10 days of such determination.

(*3*) *Form and content of updated certificate.* The updated certificate required by this paragraph (c)(2)(i) must be submitted in the same form as the original certificate (described in paragraph (c)(2)(ii) of this section), and must include a caption at the top of the certificate, in lieu of the caption required by paragraph (c)(2)(ii), that states ''UPDATED CERTIFICATE OF PARTNER-LEVEL ITEMS UNDER TEMP. REG. §1.1446–6T TO REDUCE SECTION 1446 WITHHOLDING.'' Further, the partner must attach a copy of the certificate that is being updated (superseded certificate) that was previously submitted for the same partnership taxable year.

(*4*) *When a partnership may consider an updated certificate.* A partnership may only consider an updated certificate that meets all the requirements of this paragraph (c) that it receives at least 10 days prior to an installment due date in the same partnership taxable year for which the superseded certificate was provided, or at least 10 days prior to the due date of its Form 8804 (without regard to extensions) to be filed for the year the superseded certificate was provided. An updated certificate that may be considered under the previous sentence supersedes all prior certificates submitted by the foreign partner for the same partnership taxable year, beginning with the installment period or Form 8804 filing date for which the partnership may consider the updated certificate. See §1.1446–6T(e) *Example 2.*

(ii) *Form of certification.* No particular form is required for the partner's certificate of deductions and losses to the partnership, but the partner's certificate must have a caption at the top of the page that reads: ''CERTIFICATE OF PARTNER-LEVEL ITEMS UNDER TEMP. REG. §1.1446–6T TO REDUCE SECTION 1446 WITHHOLDING.'' Further, the certificate must include:

(A) The partner's name, address, Taxpayer Identification Number (TIN), and the date of the certification;

(B) The partnership's name, address, and TIN;

(C) The partnership taxable year for which the certificate is submitted;

(D) A representation that the partner is described in paragraph (b) of this section, and that the deductions and losses set forth in the certificate are described in paragraph (c)(1) of this section;

(E) The amount of the deductions and losses described in paragraph (c)(1) and, if applicable, the character of such deductions and losses (*e.g.*, capital or ordinary), as well as any particular deductions and losses that are subject to limitation or otherwise warrant special consideration (*e.g.*, suspended passive activity losses under section 469, suspended losses under section 704(d)), that the partner reasonably expects to be available to reduce the partner's U.S. income tax liability on the partner's allocable share of effectively connected income or gain from the partnership for the partner's taxable year in which such income or gain is includible in gross income;

(F) A representation that the deductions and losses described in paragraph (c)(1) and set forth in the certificate have been reflected on a timely filed U.S. income tax return, consistent with sections 874 and 882 of the Internal Revenue Code and the regulations thereunder (and such other provisions that impose requirements for the use of such deductions and losses);

(G) A representation that the deductions and losses described in paragraph (c)(1) and set forth in the certificate have not been set forth in a certificate provided to another partnership for the same taxable year for the purpose of reducing withholding under this section;

(H) A representation that the partner has timely filed, or will timely file its U.S. Federal income tax return for each of the preceding four taxable years and the partner's taxable year during which the certificate is considered, and has timely paid (or will timely pay) all tax shown on such returns as required under paragraph (b) of this section. The partner shall specify any taxable year for which a U.S. income tax return has not been filed as of the time of submission of the certificate, set forth the filing due date for such return, and represent that the partner will comply with the provisions of this paragraph (c) for providing an updated certificate or status update with respect to the filing of any such return;

(I) A representation that all of the deductions and losses described in paragraph (c)(1) (other than losses suspended under section 704(d)) and set forth in the certificate are (or will be) reflected on an income tax return of the partner that is filed (or will be filed) with respect to a taxable year of the partner that ends prior to the installment due date or Form 8804 filing due date (without regard to extensions) for the partnership taxable year for which such certificate will be considered;

(J) A representation that such deductions and losses described in paragraph (c)(1) and set forth in such certificate have not been disallowed by the IRS as part of a proposed adjustment described in §601.103(b) of this chapter (relating to examination and determination of tax liability) or §601.105(b) of this chapter (relating to examination of returns);

(K) A representation, when applicable (see paragraph (c)(1)(iv) of this section), that the partner's only activity that gives rise to effectively connected income, gain, deduction, or loss is (and will be) during the partner's taxable year the partner's investment in the partnership;

(L) The following statement: ''Consent is hereby given to disclosures of return and return information by the Internal Revenue Service pertaining to the validity of this certificate to the partnership or other withholding agent to which this certificate is submitted for the purpose of administering section 1446.'' If a representative of the partner signs and dates the certificate under paragraph (c)(2)(ii)(M) of this section, a power of attorney specifically authorizing the agent to make the representation contained in this paragraph (c)(2)(ii)(L) must be attached to the certificate; and

(M) The signature of the partner, or its authorized representative, under

penalties of perjury, and the date that the certificate was signed.

(3) *Notification to partnership when a partner's certificate cannot be relied upon.* Subject to paragraphs (c)(2), (c)(5), and (d)(2) of this section, a partnership may generally rely on a partner's certificate of available deductions and losses provided that the partnership does not have actual knowledge or reason to know that the certificate is defective within the meaning of this paragraph (c)(3). However, a partnership may not rely on a partner's certificate if the IRS determines, in its sole discretion, whether upon audit or otherwise, that a certificate submitted by a partner is defective, or that it lacks sufficient information to determine if the certificate is defective after written request to the partner for verification of the statements on the certificate. For example, a foreign partner's certificate is defective and, therefore, invalid if the IRS determines that the foreign partner has not timely filed a U.S. income tax return for a taxable year that the partner represented was or would be timely filed. See paragraph (e) *Example 3* of this section. If the IRS determines under this paragraph (c) that a certificate is defective (or lacks information sufficient to make this determination) and notifies the partnership in writing, the partnership may not rely on any certificate submitted by the partner for the partnership taxable year to which the defective certificate relates (or any subsequent partnership taxable year), until the IRS notifies the partnership again in writing and revokes or modifies the original notice. A partner's certificate of available deductions and losses is defective if—

(i) The partner is not described in paragraph (b) of this section;

(ii) The deductions and losses set forth in such certificate are not described in paragraph (c)(1) of this section;

(iii) The timing requirements for submitting certificates (including updated certificates and status updates) under paragraph (c)(2) of this section, or the requirements for submitting such updated certificates or status updates under such paragraph, are not observed;

(iv) The certificate does not include all of the information required by paragraph (c)(2)(ii) (*e.g.*, the partner's TIN is not set forth on such certificate);

(v) Any representation set forth in such certificate is incorrect (*e.g.*, a partner's prior year return certified to have been timely filed was not timely filed, or, where applicable, that the partner is invested in or otherwise engaged in an activity (other than its investment in the partnership) that may give rise to effectively connected items); or

(vi) The actual deductions and losses available to the partner are less than the deductions and losses last certified to the partnership for the partnership taxable year and considered by the partnership.

(4) *Partner to receive copy of notice.* If the IRS notifies a partnership or withholding agent under this section that a certificate of a foreign partner is defective, the IRS shall also send a copy of such notice to the partner's address as shown on the certificate. The partnership shall promptly furnish the foreign partner whose certificate is the subject of the notice the copy of the notice received from the IRS.

(5) *Partner's certificate valid only for partnership taxable year for which submitted.* A partnership may only consider a certificate submitted under this paragraph (c) for the partnership taxable year for which the certificate is submitted, as set forth on the certificate. Therefore, for each year a partner wants the provisions of this section to apply, the partner must submit a new first certificate (as described in this paragraph (c)) for that year.

(d) *Effect of certificate of deductions and losses on partners and partnership*—(1) *Effect on partner*—(i) *No effect on substantive tax liability of foreign partner.* A foreign partner's submission of a certificate under this section to reduce or eliminate the partnership's 1446 tax (or any installment of such tax) with respect to ECTI allocable to such partner has no effect on the partner's substantive tax liability on the partner's allocable share of effectively connected income or gain from the partnership. Further, the submission of a certificate under this section does not constitute an acceptance by the IRS of the

amount or character of the deductions or losses certified.

(ii) *No effect on partner's estimated tax obligations.* A foreign partner that certifies deductions and losses to a partnership under this section is not relieved of any estimated tax obligation otherwise applicable to such partner with respect to income or gain allocated from the partnership.

(2) *Effect on partnership*—(i) *Reasonable reliance to relieve partnership from addition to the tax under section 6655.* Subject to §1.1446–2 and the rules of this section (*e.g.*, paragraph (c)(1)(iii) of this section), a partnership receiving a certificate (including an updated certificate or status update) of deductions and losses from a partner under this section may reasonably rely on such certificate (to the extent of the certified deductions and losses or other representations set forth in the certificate) for such time during which it has no actual knowledge or reason to know that the certificate is defective (within the meaning of paragraph (c)(3) of this section). To the extent a partnership has reasonably relied on a certificate under the preceding sentence, the partnership shall not be liable for any addition to the tax under section 6655 (as applied through §1.1446–3) for any period during which the partnership reasonably relied on such certificate, even if either it is later determined that the partner's certificate is defective or the partner submits an updated certificate under paragraph (c)(2) of this section that increases the 1446 tax due with respect to such partner. A partnership will not be considered to have actual knowledge or reason to know that a certificate is defective if the partnership receives an updated certificate that, pursuant to paragraph (c)(2)(i)(B)(*4*) of this section, the partnership cannot reasonably rely upon for an installment due date or Form 8804 filing date because it was received less than 10 days before such date. See paragraph (e) *Example 2* of this section.

(ii) *Filing requirement.* A partnership that relies in whole or in part on a partner's certificate pursuant to this section must file Form 8813, ''Partnership Withholding Tax Payment Voucher (Section 1446)'' or Forms 8804, ''Annual Return for Partnership Withholding Tax (Section 1446)'' and 8805, ''Foreign Partner's Information Statement of Section 1446 Withholding Tax,'' whichever is applicable, for the period for which the certificate is considered, even if no 1446 tax (or an installment of such tax) is due with respect to such foreign partner. The partnership must also attach a copy of such certificate, and the partnership's computation of 1446 tax due with respect to such partner, to both the Form 8813 and Form 8805, filed with the IRS for any period for which such certificate is considered in computing the partnership's 1446 tax (or any installment of such tax). See §1.1446–3(d)(1)(iii) requiring the partnership to provide Form 8805 to such foreign partner even if no 1446 tax is paid on behalf of the partner.

(iii) *Continuing liability for withholding tax under section 1461 and for applicable interest and penalties.* Except as provided in paragraph (d)(2)(i) of this section and this paragraph (d)(2)(iii), a partnership is not relieved from liability for the 1446 tax under section 1461 or for any applicable addition to the tax, interest, or penalties if the partnership or the IRS, in its sole discretion, determines that a partner's certificate is defective (within the meaning of paragraph (c)(3) of this section), or the partner submits an updated certificate under paragraph (c)(2) of this section that increases the 1446 tax due with respect to such partner. If a certificate is determined to be defective for a reason other than the amount or character of the deductions and losses set forth on such certificate (*e.g.*, partner failed to timely file a U.S. income tax return), then the partnership shall be liable for the full 1446 tax under section 1461 (or any installment of such tax) due with respect to such partner, without regard to the certificate. However, see §1.1446–3(e) which deems a partnership to have paid 1446 tax with respect to ECTI allocable to a partner in certain circumstances. Further, if the partnership or the IRS, in its sole discretion, determines that a certificate is defective because the actual deductions and losses available to the partner are less than the amount certified to the partnership (other than when it is determined that the partner certified the same deduction or loss to

more than one partnership), or that the character of the certified deductions and losses is erroneous, then the partnership shall be liable for 1446 tax under section 1461 (or any installment of such tax) with respect to such partner only to the extent it considers the certified deductions and losses in an amount greater than the amount determined to be actually available to the partner and permitted to be used under § 1.1446–1 through § 1.1446–6T, or to the extent that a mistake in the character of the deductions and losses results in an increase in the 1446 tax due with respect to such partner. See paragraph (e) *Example 4* of this section. Although a partnership is generally liable for the 1446 tax, any addition to the tax, interest, and penalties under this paragraph (d)(2), the partnership may be relieved of some penalties in certain circumstances. See §§ 301.6651–(1)(c) and 301.6724–1 of this chapter. See also paragraph (e) *Example 3* of this section.

(iv) *Partner's certified deductions and losses to offset foreign partner's annualized allocable share of partnership ECTI.* For purposes of section 1446, when considering a foreign partner's certificate submitted under this section in computing the 1446 tax due (or any installment of such tax) with respect to the foreign partner, a partnership shall first annualize the partner's allocable share of the partnership's effectively connected items of income, gain, deduction, and loss before considering the partner's certified deductions and losses.

(e) *Examples.* The following examples illustrate the application of this section. In considering the examples, disregard the potential application of § 1.1446–3(b)(2)(v)(F) (relating to the *de minimis* exception to paying 1446 tax) and paragraph (c)(1)(iv) of this section (relating to a foreign partner whose sole investment generating effectively connected income or gain is the partnership), and assume, where necessary, that the election to apply the temporary regulations is made. The examples are as follows:

Example 1. General application of the rules of § 1.1446–6T. NRA, a nonresident alien, and B, a U.S. person form a partnership, PRS, to conduct a trade or business in the United States. NRA and B are equal partners under the partnership agreement and the partnership, NRA, and B all maintain a calendar taxable year. NRA and B provide PRS with a valid Form W–8BEN and Form W–9, respectively. Prior to the formation of PRS, NRA had neither invested in, nor been considered to be engaged in a U.S. trade or business. In each of years 1, 2, and 3, PRS incurs a $1,000 net loss from operations which is allocated equally to NRA and B. Assume the net loss is not a passive activity loss within the meaning of section 469, is comprised entirely of ordinary items and, with respect to NRA, is an effectively connected net loss. Further, assume that NRA has timely filed U.S. Federal income tax returns for each of the first three years reflecting the losses allocated from PRS, as reflected on the Schedule K–1 issued to NRA for each of those years.

(i) With respect to Year 4, NRA may not submit a certificate under paragraph (c) of this section to PRS because NRA has not and will not have timely filed a U.S. Federal income tax return for the preceding four years. That is, during Year 4, NRA can only certify that it has or will timely file its U.S. Federal income tax returns for the preceding three years (Years 1 through 3) and the current year, Year 4. Therefore, with respect to Year 4, PRS may not use the procedures in this section to reduce its withholding tax.

(ii) Assume that in Year 4, PRS has a net income of $1,000 from its U.S. business operations and that all of such income is comprised of ordinary items. NRA's allocable share of this income is $500 and such income is effectively connected income. PRS satisfies its 1446 tax obligations for Year 4.

(iii) During Year 5, PRS uses an acceptable annualization method under § 1.1446–3 and estimates for its first installment period that it will earn $4,000 of taxable income for the taxable year. Assume that all of this income is ordinary in character and is allocable to NRA and B equally. NRA's allocable share of $2,000 is NRA's share of partnership ECTI. NRA has not yet filed its income tax return for Year 4, although NRA has received the Schedule K–1 issued by PRS pertaining to Year 4. On or before March 16th (at least 30 days prior to the first installment date) of Year 5, PRS receives a certificate described in this section from NRA which certifies that NRA reasonably expects to have available ordinary losses of $1,000 ($500 loss in each of Years 1, 2, and 3 less $500 of income in Year 4). Further, NRA makes all of the statements and representations required for the certificate to be valid.

(iv) With respect to Year 5, and based upon paragraph (b)(1) of this section, NRA can include Year 4 (NRA's preceding taxable year) as one of the preceding four years that it has timely filed or will timely file its U.S. Federal income tax return (and timely paid or

will timely pay all tax shown on such returns). Therefore, provided PRS has no actual knowledge or reason to know the certificate is defective, PRS may reasonably rely on NRA's certificate. Accordingly, PRS may consider NRA's certificate to reduce the amount that would otherwise be required to be paid on NRA's behalf under section 1446. Specifically, the $1,000 of net losses that have been reflected on Schedule K–1s issued to NRA that are available to reduce NRA's U.S. income tax on NRA's allocable share of effectively connected income or gain allocable from PRS may be used to reduce the $2,000 of ECTI estimated to be allocable to NRA. As a result, PRS must pay 1446 tax on only $1,000 of NRA's allocable share of partnership ECTI for the first installment period in Year 5. PRS must pay 1446 tax of $87.50 for its first installment period with respect to the ECTI allocable to NRA ($1,000 (net ECTI after considering certified losses) x .35 (withholding tax rate) x .25 (§6655(e)(2)(B) percentage for first installment)). Pursuant to paragraph (d)(2) of this section, PRS must also attach NRA's certificate and PRS's computation of its 1446 tax obligation with respect to NRA to its Form 8813, ''Partnership Withholding Tax Payment Voucher (Section 1446),'' filed for the first installment period. Under paragraph (c)(2)(i)(B), NRA is required to update its certified available losses on or before the 10th day after NRA files its U.S. Federal income tax return for Year 4, even if the updated certificate results in no change to the deductions and losses certified.

(v) The result in this example is the same even if NRA had not yet received a Schedule K–1 from PRS for Year 4. In such case, NRA is still permitted to certify the losses that it reasonably expects to be available for Year 5, and certify that it will timely file its U.S. Federal income tax return for Year 4 and Year 5 (and timely pay all U.S. income tax due).

Example 2. Updated certificate submitted for losses. On January 1, 2005, NRA, a foreign individual, and B, a U.S. individual, form a domestic partnership, PRS, to conduct a business in the United States, with NRA and B as equal partners in PRS. NRA and B provide a valid Form W–8BEN and Form W–9, respectively, to PRS. NRA, B, and PRS all maintain a calendar taxable year. For the preceding seven calendar taxable years (1998–2004), NRA has been engaged in a U.S. trade or business through its investment in another partnership, XYZ, and timely filed its Form 1040NR U.S. Federal income tax return reporting its share of XYZ's activity for each of years 1998–2003 (and timely paid all tax shown on such returns). NRA also timely files its income tax return for the 2004 taxable year (and timely pays all tax shown on such return) on June 8, 2005 (due date June 15, 2005). During the taxable years 1998–2004, NRA's only activity generating effectively connected items was its investment in XYZ. Assume that the losses that XYZ allocated to NRA are not considered passive activity losses to NRA within the meaning of section 469. The XYZ partnership liquidated and ceased doing business on December 31, 2004. Assume that PRS uses an acceptable annualization method under §1.1446–3 for purposes of section 1446.

(i) On or before March 16, 2005, NRA provides and PRS receives a valid certificate under this section in which NRA certifies that it reasonably expects to have available effectively connected net operating losses in the amount of $5,000. Among other statements made in accordance with paragraph (c) of this section, NRA represents that it has not filed its 2004 U.S. income tax return, but will timely file such return (and timely pay all tax shown on such return). PRS reasonably relies on such certificate within the meaning of paragraph (d) of this section. For its first installment period in 2005, PRS estimates that it will earn taxable income of $10,000 for the year which will be allocated equally to NRA and B (NRA's allocable share of $5,000 is considered NRA's share of partnership ECTI). Assume that all of this income is ordinary in character.

(ii) Under these facts, PRS may consider NRA's certified available losses when computing its 1446 tax obligation for the first installment period. PRS is limited under paragraph (c)(1)(iii) of this section and may consider only $4,500 of NRA's certified net operating loss. After consideration of the certified loss, PRS owes 1446 tax in the amount of $43.75 for the first installment period ($5,000 estimated allocable ECTI less $4,500 (certified loss as limited under paragraph (c)(1)(iii)) x .35 (1446 tax applicable percentage) x .25 (section 6655(e)(2)(B) percentage for first installment period). Pursuant to paragraph (d)(2) of this section, PRS must file Form 8813 with respect to NRA, and attach to the form a copy of NRA's certificate and PRS's computation of its 1446 tax obligation.

(iii) Assume that PRS's estimates of its net income allocable to NRA for the second and third installment periods are the same as for the first installment period (*i.e.*, NRA's allocable share of annualized ECTI is $5,000), and that on June 10, 2005, PRS receives an updated certificate under this section from NRA that certifies that NRA reasonably expects to have only $4,000 of losses available to reduce NRA's income tax liability on NRA's allocable share of the effectively connected income or gain from PRS. NRA provided this certificate within 10 days of filing its U.S. Federal income tax return for the 2004 taxable year, as required by paragraph (c) of this section. However, PRS received the updated certificate less than 10 days before its second installment due date (June 15, 2005) and, under paragraph (c)(2)(i)(B) of this section, is not permitted to

reasonably rely on the updated certificate for the second installment period. Notwithstanding that the updated certificate indicates to PRS that NRA's certified losses are less than the $5,000 set forth on NRA's first certificate, under paragraph (d)(2) of this section, PRS will not be considered to have actual knowledge or reason to know that the first certificate is defective for the second installment period. Provided the updated certificate is otherwise valid, it may be relied upon for the third installment period (due date September 15, 2005).

(iv) Under paragraph (d) of this section, PRS may reasonably rely on all or a portion of NRA's first certificate for the second installment period. That is, PRS may consider all $4,500 of NRA's certified losses, as limited by paragraph (c)(1)(iii) of this section, or some lesser amount (*e.g.*, only $4,000) for the second installment period. Further, if PRS considers NRA's first certificate for the second installment period, PRS must file Form 8813 and attach the certificate it reasonably relied upon for the second installment period. Assume that PRS considers $4,500 of the net operating losses for the second installment period, as limited by paragraph (c)(1)(iii) of this section, and therefore makes a 1446 tax payment of $43.75 on behalf of NRA.

(v) Under paragraph (d) of this section, PRS is not relieved from its liability for 1446 tax under section 1461 when it accepts a certificate of losses from a foreign partner and it is later determined that the certificate is defective, or the partner updates its certificate and represents losses in an amount less than previously certified. Under the principles of section 6655 (as applied through § 1.1446–3), PRS is required to have paid in 75 percent of the annualized 1446 tax on or before the third installment payment date (section 6655(e)(2)(B) percentage for third installment period). Under paragraph (c)(2)(i)(B) of this section, because NRA's updated certificate is valid for the third installment period, if PRS considers any certificate for that period it must consider the updated certificate. Assuming PRS considers NRA's updated certificate for the third installment period, PRS must have paid a total of $262.50 with respect to the ECTI estimated to be allocable to NRA as of the third installment due date ($1,000 (ECTI subject to 1446 tax after considering the $4,000 of certified losses on the updated certificate) x .35 (withholding tax rate) x .75 (section 6655(e)(2)(B) percentage for the third installment period)). After considering PRS's payments of 1446 tax for the first and second installment periods, PRS is required to pay $175 for the third installment period ($262.50 less previous payments totaling $87.50).

(vi) Under paragraph (d) of this section, PRS is not liable for the addition to the tax under section 6655 (as applied through § 1.1446–3) for the first or second installment period because PRS reasonably relied on NRA's certificate of losses during those periods.

Example 3. IRS determines in subsequent taxable year that partner's certificate is defective because partner failed to timely file an income tax return. NRA, a foreign individual, and B, are the only partners in PRS, a domestic partnership that conducts a trade or business in the United States. Each partner provides appropriate documentation under § 1.1446–1 (*e.g.*, Form W–8BEN, Form W–9) to establish the partner's status for purposes of section 1446. Both partners and the partnership maintain a calendar taxable year. NRA timely submits a certificate under this section to PRS to be considered for PRS's first installment period in the 2005 taxable year. The certificate sets forth that NRA reasonably expects to have $5,000 of an effectively connected net operating loss available to offset effectively connected income or gain allocable from PRS for the 2005 taxable year. No part of this loss is a passive activity loss within the meaning of section 469. NRA is eligible to submit this certificate under paragraph (b) of this section and the certificate complies with all necessary requirements set forth in this section. PRS estimates for each installment period that NRA's allocable share of ECTI will be $5,000. Further, PRS's actual operating results for the year result in $5,000 of ECTI allocable to NRA.

(i) PRS reasonably relies on (within the meaning of paragraph (d)(2) of this section) NRA's certificate when computing each installment payment during the 2005 taxable year and its 1446 tax on Form 8804, and appropriately considers the limitation set forth in paragraph (c)(1)(iii) of this section. As a result, PRS paid a total of $175 of 1446 tax on behalf of NRA for the taxable year ($5,000 allocable share of ECTI—$4,500 losses permitted to be considered under paragraph (c)(1)(iii) of this section x .35 applicable percentage). As required under paragraph (d) of this section, PRS attached the certificate it relied upon and its calculation of 1446 tax for each period to the Form 8813 or Form 8805 it filed for such period with the IRS.

(ii) Assume that NRA timely submits a certificate under this section to be considered for PRS's first installment due date of the 2006 taxable year (due date April 17, 2006). The certificate represents that NRA reasonably expects to have $5,000 of an effectively connected net operating loss available to offset effectively connected income or gain allocated from PRS for the 2006 taxable year. No part of this loss is a passive activity loss within the meaning of section 469. Further, the certificate contains all of the necessary representations required under this section. For the first installment period of 2006, PRS

estimates that NRA's allocable share of partnership ECTI is $5,000. Assume all of the estimated ECTI is ordinary in character and, pursuant to paragraph (d)(2) of this section, PRS reasonably relies on NRA's certificate for the first installment period and appropriately determines that it is required to make an installment payment of 1446 tax on behalf of NRA in the amount of $43.75 ($5,000 estimated allocable ECTI less $4,500 (certified loss as limited under paragraph (c)(1)(iii) of this section) x .35 (1446 tax applicable percentage) x .25 (section 6655(e)(2)(B) percentage for first installment period). PRS makes the $43.75 installment payment of 1446 tax with the Form 8813 it files for the first installment period, and complies with paragraph (d)(2) of this section and attaches NRA's certificate and PRS's computation of 1446 tax to its Form 8813.

(iii) Assume that the IRS notifies the partnership on June 1, 2006, pursuant to paragraph (c)(3) of this section, that NRA's certificate for PRS's 2005 taxable year is defective because NRA failed to timely file its U.S. Federal income tax return for one of the taxable years that NRA represented was (or would be) timely filed (*e.g.*, 2001, 2002, 2003, or 2004). The IRS notice states that PRS is not to rely on any certificate that NRA has submitted for the 2006 taxable year.

(iv) Under paragraph (d)(2)(iii) of this section, PRS is not relieved from its liability for 1446 tax under section 1461 when it accepts a certificate of losses from a foreign partner and it is later determined that the certificate is defective. Because NRA's certificate was determined to be defective for a reason other than the amount or character of the certified deductions and losses, PRS is fully liable for the 1446 tax due with respect to NRA's allocable share of partnership ECTI for the 2005 taxable year without regard to the certificate. The total 1446 tax due for 2005 is $1,750 ($5,000 ECTI x .35) and PRS has paid $175 of this liability. Therefore, PRS owes $1,575 of 1446 tax. However, PRS may be deemed to have paid the outstanding 1446 tax due if NRA has paid all of its tax. See § 1.1446–3(e).

(v) Because PRS neither had actual knowledge nor reason to know that the certificate submitted by NRA was defective, PRS reasonably relied on NRA's certificate for the 2005 taxable year under paragraph (d)(2) of this section. Therefore, PRS is not liable for an underpayment addition to the tax under the principles of section 6655 (as applied through § 1.1446–3) for any installment period during the 2005 taxable year.

(vi) However, PRS is generally liable for interest under section 6601 and for the failure to pay penalty under section 6651(a)(2) on the $1,575 of 1446 tax due for the 2005 taxable year from April 17, 2006 (last date prescribed for payment of 1446 tax), to the date that the partnership pays the 1446 tax or is deemed to have paid such tax under § 1.1446–3(e).

(vii) With respect to the 2006 taxable year, PRS reasonably relied on NRA's certificate when computing its first installment payment for the 2006 taxable year (due on April 17, 2006). Therefore, PRS will not be liable for the underpayment addition to the tax under section 6655 (as applied through § 1.1446–3) for the first installment period in 2006. However, because PRS was notified on June 1, 2006, to disregard any certificate received from NRA for the 2006 taxable year, PRS may not rely on NRA's certificate (or any new certificate provided by NRA) when PRS computes its second installment payment of 1446 tax due on June 15, 2006. PRS is not permitted to consider any certificate submitted by NRA under this section until the IRS notifies the partnership again in writing and revokes or modifies the original notice.

Example 4. IRS determines in subsequent taxable year that partner's certificate is defective because partner's actual losses are less than amount certified and considered by the partnership. Assume the same facts as in *Example 3*, except that the IRS does not determine that NRA's certificate for 2005 was defective because NRA failed to timely file a U.S. income tax return for a prior year. Rather, the IRS determines that NRA's certificate was defective for the 2005 taxable year because NRA's actual available net operating loss for the taxable year was $1,000, not the $5,000 amount that was certified. In *Example 3*, pursuant to paragraph (c)(1)(iii) of this section, PRS considered $4,500 of the certified loss in each installment period and when completing Form 8804.

(*i*) Under paragraph (d)(2)(iii) of this section, PRS is not relieved from its liability for 1446 tax under section 1461 when it accepts a certificate of losses from a foreign partner and it is later determined that the certificate is defective. However, when the IRS determines that a partner's certificate is defective because of the amount or character of the certified deductions and losses set forth on such certificate, the partnership is only liable for the 1446 tax, interest, and penalties to the extent it considered the certified deductions and losses on such certificate when computing its 1446 tax (or any installment of such tax) in an amount greater than the partner's actual available losses. Here, PRS considered the certified deductions and losses in the amount of $4,500. It was later determined that NRA only had $1,000 of actual losses. Accordingly, PRS is liable for the 1446 tax due with respect to the portion of the overstated losses that it considered when computing its 1446 tax. The remaining 1446 tax due for 2005 is $1,225 ($3,500 of excess losses considered x .35). However, PRS may be deemed to have paid the $1,225 of 1446 tax under § 1.1446–3(e) if NRA has paid all of NRA's U.S. income tax.

(ii) If PRS had considered only $1,000 of NRA's certified net operating loss when computing and paying its 1446 tax during the 2005 taxable year then, under paragraph (d)(2)(iii) of this section, PRS would not be liable for 1446 tax because it did not consider the certified deductions and losses in an amount greater than the amount determined to be actually available to the partner.

Example 5. Partner with different taxable year than partnership. PRS partnership has two equal partners, FC, a foreign corporation, and DC, a domestic corporation. PRS conducts a trade or business in the United States and generates effectively connected income. FC maintains a June 30 fiscal taxable year end, while DC and PRS maintain a calendar taxable year end. FC and DC provide a valid Form W–8BEN and Form W–9, respectively, to PRS. PRS uses an acceptable annualization method under § 1.1446–3 in computing its 1446 tax. FC and DC are the only persons that have ever been partners in PRS. For its 2000 through 2004 taxable years, PRS issued Schedule K–1s to each of its partners. In the aggregate, the Schedule K–1s passed through $100 of net ordinary loss to each partner. For its 2005 taxable year, PRS issued Schedule K–1s to its partners passing through $150 of ordinary loss to each partner. All of the losses passed through on the Schedule K–1s are effectively connected to PRS's and FC's trade or business in the United States.

(i) Assume that all the requirements of this section have been met to permit FC to certify losses to the partnership for the partnership's 2006 taxable year. Further, assume that FC's only source of effectively connected income, gain, deduction, or loss is the activity of PRS.

(ii) For PRS's first installment period in 2006, FC may only certify deductions and losses under this section in the amount of $100 (the losses as reflected on the Schedule K–1s issued for PRS's 2000–2004 taxable years). Under section 706, the taxable income of a partner shall include the income, gain, loss, deduction, or credit of the partnership for the partnership taxable year ending within or with the taxable year of the partner. PRS's 2005 calendar taxable year ends during FC's fiscal taxable year ending June 30, 2006. Therefore, under paragraph (c)(1) of this section, as of March 18, 2006 (the last date FC may submit its first certificate under paragraph (c) to have it considered for PRS's first installment due date of April 17, 2006), the losses passed through from PRS for the 2000–2004 partnership taxable years will be the only losses that FC can represent will be reflected on an FC U.S. income tax return filed for a taxable year ending prior to such installment due date.

(iii) The result in (ii) is the same for the second installment period, the due date of which is June 15, 2006.

(iv) FC may submit an updated certificate under this section after June 30, 2006, that includes the 2005 Schedule K–1 loss in the amount of $150. PRS may consider such an updated certificate for its third installment period (due date September 15, 2006), provided the updated certificate is received in accordance with paragraph (c) of this section, by September 5, 2006.

Example 6. Failure to provide status update with respect to prior year unfiled returns. PRS partnership has two equal partners, FC, a foreign corporation, and DC, a domestic corporation. Both partners and PRS maintain calendar taxable years. PRS is engaged in a trade or business in the United States. FC and DC provide Form W–8BEN and Form W–9, respectively, to establish each partner's status for purposes of section 1446. Assume all partnership items allocated from the partnership arise from the partnership's trade or business in the United States and, therefore, FC's allocable share of these items is considered effectively connected.

(i) Assume FC is eligible to submit a certificate under this section and submits a certificate at least 30 days prior to PRS's first installment due date. FC represents that it has or will timely filed an income tax return in the United States in each of the preceding four taxable years (and has timely paid or will timely pay all tax shown on such returns). FC specifies that it has not filed its U.S. income tax return for the immediately preceding taxable year. FC also represents that it will timely file its U.S. income tax return for the partner taxable year during which the certificate is considered (and will timely pay all tax shown on such return). All other requirements under paragraph (c) of this section are met for FC's certificate to be valid.

(ii) Provided that PRS does not possess actual knowledge or reason to know that FC's certificate is defective, and an updated certificate is not provided to PRS, under paragraph (d) of this section, PRS may reasonably rely on FC's certificate for its first, second, and third installment payments.

(iii) If FC does not submit either an updated certificate or a status update as required by paragraph (c) of this section with respect to the filing of the previous year's income tax return by December 5th of PRS's current taxable year, PRS must disregard FC's certificate when computing its fourth installment payment of 1446 tax and when completing its Form 8804 for the taxable year. Further, even if the status update with respect to the preceding year's return is provided, PRS may only rely on the certificate provided the status update does not contradict the certificate and such update indicates that the preceding year's return may still be, and will be, timely filed.

(f) *Effective dates.* The rules of this section are applicable for partnership taxable years beginning after May 18, 2005. However, a partnership may elect to apply all of the provisions of the temporary regulations to partnership taxable years beginning after December 31, 2004, provided the partnership also elects under § 1.1446–7 to apply §§ 1.1446–1 through 1.1446–5 to partnership taxable years beginning after December 31, 2004. A partnership shall make the election under this section by complying with the provisions of this section and attaching a statement to the Form 8804 annual return filed for the taxable year in which the regulation provisions first apply, that indicates that the partnership is making the election under this section and § 1.1446–7.

[T.D. 9200, 70 FR 28717, May 18, 2005]

§ 1.1446–7 Effective dates.

Sections 1.1446–1 through 1.1446–5 shall apply to partnership taxable years beginning after May 18, 2005. However, a partnership may elect to apply all of the provisions of §§ 1.1446–1 through 1.1446–5 to partnership taxable years beginning after December 31, 2004. A partnership shall make the election under this section by complying with the provisions of §§ 1.1446–1 through § 1.1446–5 and attaching a statement to the Form 8804 or Form 1042 annual return, filed for the taxable year in which the regulation provisions first apply, that indicates that the partnership is making the election under this section.

[T.D. 9200, 70 FR 28717, May 18, 2005]

TAX-FREE COVENANT BONDS

§ 1.1451–1 Tax-free covenant bonds issued before January 1, 1934.

(a) *Rates of withholding*—(1) *Rate of 2 percent.* Withholding of a tax equal to 2 percent is required in the case of interest upon bonds or other corporate obligations containing a tax-free covenant and issued before January 1, 1934, paid to an individual, a fiduciary, or a partnership, whether resident or nonresident, or to a nonresident foreign corporation, regardless of whether the liability assumed by the obligor is less than, equal to, or greater than 2 percent.

(2) *Rate of 30 percent.* Notwithstanding subparagraph (1) of this paragraph, if the liability assumed by the obligor does not exceed 2 percent of the interest, withholding is required at the rate of 30 percent in the case of payments to a nonresident alien individual, a nonresident partnership composed in whole or in part of nonresident aliens, a nonresident foreign corporation, or an owner who is unknown to the withholding agent.

(3) *Obligations of resident payers.* The rates of withholding specified in subparagraphs (1) and (2) of this paragraph are applicable to interest on such tax-free covenant bonds issued by a domestic corporation or by a resident foreign corporation.

(4) *Obligations of nonresident payers.* A nonresident foreign corporation having a fiscal or paying agent in the United States is required to withhold a tax of 2 percent in the case of interest upon its tax-free covenant bonds issued before January 1, 1934, which is paid to an individual or fiduciary who is a citizen or resident of the United States, to a partnership any member of which is a citizen or resident, or to an unknown owner.

(5) *Interest from sources without the United States.* Withholding is not required under section 1451 in the case of interest upon bonds or other corporate obligations issued before January 1, 1934, and containing a tax-free covenant if the interest is not to be treated as income from sources within the United States and the payments are made to a nonresident alien, a partnership composed wholly of nonresident aliens, or a nonresident foreign corporation.

(6) *Tax treaties.* The rates of tax to be withheld in accordance with this paragraph shall be reduced as may be provided by treaty with any country. See section 894 and § 1.1441–6 relating to income subject to a reduced rate of, or an exemption from, income tax pursuant to an income tax convention.

(b) *Date of issue.* The withholding provisions of section 1451 are applicable only to bonds, mortgages, or deeds of trust, or other similar obligations of a corporation which were issued before

January 1, 1934, and which contain a tax-free covenant. For the purpose of section 1451, bonds, mortgages, or deeds of trust, or other similar obligations of a corporation, are issued when delivered. If a broker or other person acts as selling agent of the obligor, the obligation is issued when delivered by the agent to the purchaser. If a broker or other person purchases the obligation outright for the purpose of holding or reselling it, the obligation is issued when delivered to such broker or other person.

(c) *Extended maturity date.* In cases where on or after January 1, 1934, the maturity date of bonds or other obligations of a corporation is extended, the bonds or other obligations shall be considered to have been issued on or after January 1, 1934. The interest on such obligations is not subject to the withholding provisions of section 1451 but falls within the class of interest described in section 1441. See paragraph (c)(5)(iii) of § 1.1441–3.

(d) *Covenant in trust deed.* Bonds issued under a trust deed containing a tax-free covenant are treated as if they contain such a covenant. If neither the bonds nor the trust deeds given by the obligor to secure them contained a tax-free covenant, but the original trust deeds were modified before January 1, 1934, by supplemental agreements containing a tax-free covenant executed by the obligor corporation and the trustee, the bonds issued before January 1, 1934, are subject to the provisions of section 1451, provided appropriate authority existed for the modification of the trust deeds in this manner. The authority must have been contained in the original trust deeds or actually secured from the bondholders.

(e) *Notation showing date of issue.* In order that the date of issue of bonds, mortgages, deeds of trust, or other similar corporate obligations containing a tax-free covenant may be readily determined by the owner for the purpose of preparing the ownership certificates required by § 1.1461–1, the issuing or debtor corporation shall indicate the date of issue by an appropriate notation, or use the phrase ''issued on or after January 1, 1934,'' on each such obligation or in a statement accompanying the delivery of the obligation.

(f) *Effect of withholding on income taxes of bondholder and issuing corporation*—(1) *Federal tax.* In the case of corporate bonds or other corporate obligations issued before January 1, 1934, and containing a tax-free covenant, the corporation paying a Federal tax, or any part of it, for someone else pursuant to its agreement is not entitled to deduct such payment from its gross income on any ground; nor shall the tax so paid be included in the gross income of the bondholder. The amount of the tax so paid may, nevertheless, be claimed by the bondholder in accordance with paragraph (a) of § 1.1462–1 as a credit against the total amount of income tax due. See also section 32. The tax so paid by the corporation upon tax-free covenant bond interest payable to a domestic or resident fiduciary and allocable to any nonresident alien beneficiary under section 652 or 662 is allowable, pro rata, as a credit against:

(i) The tax required to be withheld by the fiduciary in accordance with paragraph (f) of § 1.1441–3 from the income of the beneficiary, and

(ii) The total income tax computed in the return of the beneficiary, as indicated in paragraph (a) of § 1.1462–1.

(2) *State taxes.* In the case of corporate bonds or other obligations containing an appropriate tax-free covenant, the corporation paying for someone else, pursuant to its agreement, a State tax or any tax other than a Federal tax may deduct such payment as interest paid on indebtedness.

(g) *Alien resident of Puerto Rico.* For purposes of this section the term ''nonresident alien individual'' includes an alien resident of Puerto Rico.

(h) *Other rules for withholding of tax under section 1451.* The rules for withholding stated in paragraphs (c) (2) and (3), (f), and (g) of § 1.1441–3 shall also apply for purposes of withholding the tax under this section.

[T.D. 6500, 25 FR 12076, Nov. 26, 1960, as amended by T.D. 7157, 36 FR 25228, Dec. 30, 1971]

§ 1.1451–2 Exemptions from withholding under section 1451.

(a) *Claiming personal exemptions.* Withholding under § 1.1451–1 from interest on bonds or other obligations of corporations issued before January 1, 1934, and containing a tax-free covenant shall not be required if there is filed with the withholding agent when presenting coupons for payment, or not later than February 1 of the following year, an ownership certificate on Form 1000 stating:

(1) In the case of a citizen or resident of the United States, that his taxable income does not exceed his deductions for personal exemptions allowed under section 151; or

(2) In the case of an estate or trust the fiduciary of which is a citizen or resident of the United States, that its taxable income does not exceed the deduction for the personal exemption allowed under section 642(b).

(b) *Claiming residence in United States.* To claim residence in the United States for purposes of section 1451, see § 1.1441–5.

(c) *Other exemptions.* The exemptions allowed by paragraphs (d) and (h) of § 1.1441–4 shall also apply for purposes of section 1451.

[T.D. 6500, 25 FR 12077, Nov. 26, 1960, as amended by T.D. 6908, 31 FR 16774, Dec. 31, 1966]

APPLICATION OF WITHHOLDING PROVISIONS

§ 1.1461–1 Payment and returns of tax withheld.

(a) *Payment of withheld tax*—(1) *Deposits of tax.* Every withholding agent who withholds tax pursuant to chapter 3 of the Internal Revenue Code (Code) and the regulations under such chapter shall deposit such amount of tax with an authorized financial institution as provided in § 1.6302–2(a). If for any reason the total amount of tax required to be returned for any calendar year pursuant to paragraph (b) of this section has not been deposited pursuant to § 1.6302–2, the withholding agent shall pay the balance of tax due for such year at such place as the Internal Revenue Service (IRS) shall specify. The tax shall be paid when filing the return required under paragraph (b)(1) of this section for such year, unless the IRS specifies otherwise. With respect to withholding under section 1446, this section shall only apply to publicly traded partnerships. See § 1.1461–3 for penalties applicable to partnerships that fail to withhold under section 1446 on effectively connected taxable income allocable to foreign partners. The previous two sentences shall apply to partnership taxable years beginning after May 18, 2005, or such earlier time as the regulations under §§ 1.1446–1 through 1.1446–5 apply by reason of an election under § 1.1446–7.

(2) *Penalties for failure to pay tax.* For penalties and additions to the tax for failure to timely pay the tax required to be withheld under chapter 3 of the Code, see sections 6656, 6672, and 7202 and the regulations under those sections.

(b) *Income tax return*—(1) *General rule.* A withholding agent shall make an income tax return on Form 1042 (or such other form as the IRS may prescribe) for income paid during the preceding calendar year that the withholding agent is required to report on an information return on Form 1042–S (or such other form as the IRS may prescribe) under paragraph (c)(1) of this section. See section 6011 and § 1.6011–1(c). The withholding agent must file the return on or before March 15 of the calendar year following the year in which the income was paid. The return must show the aggregate amount of income paid and tax withheld required to be reported on all the Forms 1042–S for the preceding calendar year by the withholding agent, in addition to such information as is required by the form and accompanying instructions. Withholding certificates or other statements or information provided to a withholding agent are not required to be attached to the return. A return must be filed under this paragraph (b)(1) even though no tax was required to be withheld during the preceding calendar year. The withholding agent must retain a copy of Form 1042 for the applicable statute of limitations on assessments and collection with respect to the amounts required to be reported on the Form 1042. See section 6501 and

the regulations thereunder for the applicable statute of limitations. Adjustments to the total amount of tax withheld, as described in § 1.1461–2, shall be stated on the return as prescribed by the form and accompanying instructions.

(2) *Amended returns.* An amended return may be filed on a Form 1042 or such other form as the IRS may prescribe. An amended return must include such information as the form or accompanying instructions shall require, including, with respect to any information that has changed from the time of the filing of the return, the information that was shown on the original return and the corrected information.

(c) *Information returns*—(1) *Filing requirement*—(i) *In general.* A withholding agent (other than an individual who is not acting in the course of a trade or business with respect to a payment) must make an information return on Form 1042–S (or such other form as the IRS may prescribe) to report the amounts subject to reporting, as defined in paragraph (c)(2) of this section, that were paid during the preceding calendar year. Notwithstanding the preceding sentence, any person that withholds or is required to withhold an amount under sections 1441, 1442, 1443, or § 1.1446–4(a) (applicable to publicly traded partnerships required to pay tax under section 1446 on distributions) must file a Form 1042–S, ''Foreign Person's U.S. Source Income Subject to Withholding,'' for the payment withheld upon whether or not that person is engaged in a trade or business and whether or not the payment is an amount subject to reporting. The reference in the previous sentence to withholding under § 1.1446–4 shall apply to partnership taxable years beginning after May 18, 2005, or such earlier time as the regulations under §§ 1.1446–1 through 1.1446–5 apply by reason of an election under § 1.1446–7. A Form 1042–S shall be prepared for each recipient of an amount subject to reporting. The Form 1042–S shall be prepared in such manner as the form and accompanying instructions prescribe. One copy of the Form 1042–S shall be filed with the IRS on or before March 15 of the calendar year following the year in which the amount subject to reporting was paid. It shall be filed with a transmittal form as provided in the instructions to the Form 1042–S and to the transmittal form. Withholding certificates, documentary evidence, or other statements or documentation provided to a withholding agent are not required to be attached to the form. Another copy of the Form 1042–S must be furnished to the recipient for whom the form is prepared (or any other person, as required under this paragraph (c) or the instructions to the form) on or before March 15 of the calendar year following the year in which the amount subject to reporting was paid. The withholding agent must retain a copy of each Form 1042–S for the statute of limitations on assessment and collection applicable to the Form 1042 to which the Form 1042–S relates.

(ii) *Recipient*—(A) *Defined.* For purposes of this section, the term *recipient* means—

(*1*) A beneficial owner as defined in § 1.1441–1(c)(6), including a foreign estate or a foreign complex trust, as defined in § 1.1441–1(c)(25);

(*2*) A qualified intermediary as defined in § 1.1441–1(e)(5)(ii);

(*3*) A withholding foreign partnership as defined in § 1.1441–5(c)(2) or a withholding foreign trust under § 1.1441–5(e)(5)(v);

(*4*) An authorized foreign agent as defined in § 1.1441–7(c);

(*5*) A U.S. branch that is treated as a U.S. person under § 1.1441–1(b)(2)(iv)(A);

(*6*) A nonwithholding foreign partnership or a foreign simple trust as defined in § 1.1441–1(c)(24), but only to the extent the income is (or is treated as) effectively connected with the conduct of a trade or business in the United States by such entity;

(*7*) A payee, as defined in § 1.1441–1(b)(2) that is presumed to be a foreign person under the presumption rules of § 1.1441–1(b)(3); 1.1441–5(d) or (e)(6), or 1.6049–5(d); and

(*8*) A partner receiving a distribution from a publicly traded partnership subject to withholding under section 1446 and § 1.1446–4 on distributions of effectively connected income. This paragraph (c)(1)(ii)(A)(*8*) shall apply to partnership taxable years beginning after May 18, 2005, or such earlier time

as the regulations under §§ 1.1446–1 through 1.1446–5 apply by reason of an election under § 1.1446–7.

(*9*) Any other person as required on Form 1042–S or the instructions to the form.

(B) *Persons that are not recipients.* A recipient does not include—

(*1*) A nonqualified intermediary;

(*2*) A payment to a wholly-owned entity that is disregarded under § 301.7701–2(c)(2) of this chapter as an entity separate from its owner;

(*3*) A flow-through entity, as defined in § 1.1441–1(c)(23) (to the extent it is receiving amounts subject to reporting other than income effectively connected with the conduct of a trade or business in the United States); and

(*4*) A U.S. branch described in § 1.1441–1(b)(2)(iv) that is not treated as a U.S. person under that section.

(2) *Amounts subject to reporting*—(i) *In general.* Subject to the exceptions described in paragraph (c)(2)(ii) of this section, amounts subject to reporting on Form 1042–S are amounts paid to a foreign payee or partner (including persons presumed to be foreign) that are amounts subject to withholding as defined in § 1.1441–2(a) or § 1.1446–4(a) (addressing publicly traded partnerships required to pay withholding tax under section 1446 on distributions of effectively connected income). The reference in the previous sentence to withholding under § 1.1446–4 shall apply to partnership taxable years beginning after May 18, 2005, or such earlier time as the regulations under §§ 1.1446–1 through 1.1446–5 apply by reason of an election under § 1.1446–7. Amounts subject to reporting include amounts subject to withholding even if no amount is deducted and withheld from the payment because of a treaty or Internal Revenue Code exception to taxation or because an amount withheld was reimbursed to the payee under the adjustment procedures of § 1.1461–2. In addition, amounts subject to reporting include any amounts paid to a foreign payee on which a withholding agent withheld an amount (either under chapter 3 of the Internal Revenue Code or section 3406) whether or not the amount is subject to withholding. Amounts subject to reporting include, but are not limited to, the following items—

(A) The entire amount of a corporate distribution (whether actual or deemed) irrespective of any estimate of the portion of the distribution that represents a taxable dividend;

(B) Interest, including the portion of a notional principal contract payment that is characterized as interest. Interest shall also be reported on Form 1042-S if it is bank deposit interest paid to nonresident alien individuals as required under § 1.6049–8;

(C) Rents;

(D) Royalties;

(E) Compensation for dependent and independent personal services performed in the United States;

(F) Annuities;

(G) Pension distributions and other deferred income;

(H) Gambling winnings that are not exempt from tax under section 871(j);

(I) Income from the cancellation of indebtedness unless the withholding agent is unrelated to the debtor and does not have knowledge of the facts that give rise to the payment (see § 1.1441–2(d));

(J) Amounts that are (or are presumed to be) effectively connected with the conduct of a trade or business in the United States (including deposit interest as defined in sections 871(i)(2)(A) and 881(d)) even if no withholding certificate is required to be furnished by the payee or beneficial owner. In the case of amounts paid on a notional principal contract described in § 1.1441–4(a)(3) that are presumed to be effectively connected with the conduct of a trade or business in the United States, the amount required to be reported is limited to the amount of cash paid from the notional principal contract;

(K) Scholarship, fellowship, or grant income and compensation for personal services that is not excludible from gross income under section 117 (whether or not the taxable scholarship, fellowship, grant income, or compensation for personal services is exempt from tax under an income tax treaty) paid to foreign students, trainees, teachers, or researchers;

(L) Amounts paid to foreign governments, international organizations, or

the Bank for International Settlements, whether or not documentation must be provided; and

(M) Original issue discount paid on the redemption of an OID obligation. The amount to be reported is the amount of OID includible in the gross income of the holder of the obligation, if known, or, if not known, the total amount of original issue discount determined as if the holder held the obligation from its original issuance. A withholding agent may determine the total amount of OID by using the most recently published ''List of Original Issue Discount Instruments,'' (Publication 1212, available from the IRS Forms Distribution Centers).

(ii) *Exceptions to reporting.* The amounts listed in this paragraph (c)(2)(ii) are not required to be reported on Form 1042–S—

(A) Interest (including original issue discount) that is deposit interest under sections 871(i)(2)(A) and 881(d) and that is not effectively connected with the conduct of a trade or business in the United States, unless reporting is required under §1.6049–8 (regarding payments to certain foreign residents) or is interest that is effectively connected with the conduct of a trade or business in the United States;

(B) Interest or original issue discount on certain short-term obligations, described in section 871(g)(1)(B) or 881(a)(3);

(C) Interest paid on obligations sold between interest payment dates and the portion of the purchase price of an OID obligation that is sold or exchanged in a transaction other than a redemption, unless the sale or exchange is part of a plan, the principal purpose of which is to avoid tax and the withholding agent has actual knowledge or reason to know of such plan (see §1.1441–2(a)(5) and (6));

(D) Any item required to be reported on a Form W–2, including an item required to be shown on Form W–2 solely by reason of §1.6041–2 (relating to return of information for payments to employees) or §1.6052–1 (relating to information regarding payment of wages in the form of group-term life insurance);

(E) Any item required to be reported on Form 1099, and such other forms as are prescribed pursuant to the information reporting provisions of sections 6041 through 6050P and the regulations under those sections;

(F) Amounts paid on a notional principal contract described in §1.1441–4(a)(3)(i) that are not effectively connected with the conduct of a trade or business in the United States (or not treated as effectively connected pursuant to §1.1441–4(a)(3)(ii));

(G) Amounts required to be reported on Form 8288 (U.S. Withholding Tax Return for Dispositions by Foreign Persons of U.S. Real Property Interests) or Form 8804 (Annual Return for Partnership Withholding Tax (section 1446)). A withholding agent that must report a distribution partly on a Form 8288 or 8804 and partly on a Form 1042–S may elect to report the entire amount on a Form 8288 or 8804;

(H) Interest (including original issue discount) paid with respect to foreign-targeted registered obligations described in §1.871–14(e)(2) to the extent the documentation requirements described in §1.871–14(e)(3) and (4) are required to be satisfied (taking into account the provisions of §1.871–14(e)(4)(ii), if applicable;

(I) Interest on a foreign targeted bearer obligation (see §§1.1441–1(b)(4)(i) and 1.1441–2(a));

(J) Gain described in section 301(c)(3); and

(K) Amounts described in §1.1441–1(b)(4)(xviii) (dealing with certain amounts paid by the U.S. government).

(3) *Required information.* The information required to be furnished under this paragraph (c)(3) shall be based upon the information provided by or on behalf of the recipient of an amount subject to reporting (as corrected and supplemented based on the withholding agent's actual knowledge) or the presumption rules of §§1.1441–1(b)(3), 1.1441–4(a), 1.1441–5(d) and (e), 1.1441–9(b)(3), 1.1446–1(c)(3) (as applied to publicly traded partnerships required to pay tax under section 1446 on distributions of effectively connected income) or 1.6049–5(d). The reference in the previous sentence to presumption rules applicable to withholding under section 1446 shall apply to partnership taxable years beginning after May 18, 2005, or such earlier time as the regulations

under §§1.1446–1 through 1.1446–5 apply by reason of an election under §1.1446–7. The Form 1042–S must include the following information, if applicable—

(i) The name, address, and taxpayer identifying number of the withholding agent;

(ii) A description of each category of income paid based on the income codes provided on the form (e.g., interest, dividends, royalties, etc.) and the aggregate amount in each category expressed in U.S. dollars;

(iii) The rate of withholding applied or the basis for exempting the payment from withholding (based on exemption codes provided on the form);

(iv) The name and address of the recipient;

(v) The name and address of any nonqualified intermediary, flow-through entity, or U.S. branch as described in §1.1441–1(b)(2)(iv) (other than a branch that is treated as a U.S. person) to which the payment was made;

(vi) The taxpayer identifying number of the recipient if required under §1.1441–1(e)(4)(vii) or if actually known to the withholding agent making the return;

(vii) The taxpayer identifying number of a nonqualified intermediary or flow-through entity (to the extent it is not a recipient) or other flow-through entity to the extent it is known to the withholding agent;

(viii) The country (based on the country codes provided on the form) of the recipient and of any nonqualified intermediary or flow-through entity the name of which appears on the form; and

(ix) Such information as the form or the instructions may require in addition to, or in lieu of, information required under this paragraph (c)(3).

(4) *Method of reporting*—(i) *Payments by U.S. withholding agents to recipients.* A withholding agent that is a U.S. person (other than a foreign branch of a U.S. person that is a qualified intermediary as defined in §1.1441–1(e)(5)(ii)) and that makes payments of amounts subject to reporting on Form 1042–S must file a separate Form 1042–S for each recipient who receives such amount. For purposes of this paragraph (c)(4), a U.S. person includes a U.S. branch described in §1.1441–1(e)(2)(iv)(A) or (E) that agrees to be treated as a U.S. person. Except as may otherwise be required on Form 1042–S or the instructions to the form, only payments for which the income code, exemption code, withholding rate and recipient code are the same may be reported on a single Form 1042–S. See paragraph (c)(4)(ii) of this section for reporting of payments made to a person that is not a recipient.

(A) *Payments to beneficial owners.* If a U.S. withholding agent makes a payment directly to a beneficial owner it must complete Form 1042–S treating the beneficial owner as the recipient. Under the grace period rule of §1.1441–1(b)(3)(iv), a U.S. withholding agent may, under certain circumstances, treat a payee as a foreign person while the withholding agent awaits a valid withholding certificate. A U.S. withholding agent who relies on the grace period rule to treat a payee as a foreign person must file a Form 1042–S to report all payments on Form 1042–S during the period that person was presumed to be foreign even if that person is later determined to be a U.S. person based on appropriate documentation or is presumed to be a U.S. person after the grace period ends. In the case of joint owners, a withholding agent may provide a single Form 1042–S made out to the owner whose status the U.S. withholding agent relied upon to determine the applicable rate of withholding. If, however, any one of the owners requests its own Form 1042–S, the withholding agent must furnish a Form 1042–S to the person who requests it. If more than one Form 1042–S is issued for a single payment, the aggregate amount paid and tax withheld that is reported on all Forms 1042–S cannot exceed the total amounts paid to joint owners and the tax withheld thereon.

(B) *Payments to a qualified intermediary, a withholding foreign partnership, or a withholding foreign trust.* A U.S. withholding agent that makes payments to a qualified intermediary (whether or not the qualified intermediary assumes primary withholding responsibility), a withholding foreign partnership, or a withholding foreign trust shall complete Forms 1042–S treating the qualified intermediary or

withholding foreign partnership as the recipient. The U.S. withholding agent must complete a separate Form 1042–S for each withholding rate pool. A withholding rate pool is a payment of a single type of income (determined by the income codes on Form 1042–S) that is subject to a single rate of withholding. A qualified intermediary that does not assume primary withholding responsibility on all payments it receives provides information regarding the proportions of income subject to a particular withholding rate to the withholding agent on a withholding statement associated with a qualified intermediary withholding certificate. A qualified intermediary may provide a U.S. withholding agent with information regarding withholding rate pools for U.S. non-exempt recipients (as defined under §1.1441–1(c)(21)). Amounts paid with respect to such withholding rate pools must be reported on Form 1099 completed for each U.S. non-exempt recipient to the extent they are subject to Form 1099 reporting. These amounts must not be reported on Form 1042–S. In addition, the qualified intermediary may provide the U.S. withholding agent information regarding withholding rate pools for U.S. persons that are exempt recipients as defined under §1.1441–1(c)(20). If such information is provided, a U.S. withholding agent should not report such withholding rate pools on Form 1042–S.

(C) *Amounts paid to U.S. branches treated as U.S. persons.* A U.S. withholding agent making a payment to a U.S. branch of a foreign person described in §1.1441–1(b)(2)(iv) shall complete Form 1042–S as follows—

(*1*) If the branch has provided the U.S. withholding agent with a withholding certificate that evidences its agreement with the withholding agent to be treated as a U.S. person, the U.S. withholding agent files Forms 1042–S treating the U.S. branch as the recipient;

(*2*) If the branch has provided the U.S. withholding agent with a withholding certificate that transmits information regarding beneficial owners, qualified intermediaries, withholding foreign partnerships, or other recipients, the U.S. withholding agent must complete a separate Form 1042–S for each recipient whose documentation is associated with the U.S. branch's withholding certificate; or

(*3*) If the U.S. withholding agent cannot reliably associate a payment with a valid withholding certificate from the U.S. branch, it shall treat the U.S. branch as the recipient and report the income as effectively connected with the conduct of a trade or business in the United States.

(D) *Amounts paid to an authorized foreign agent.* If a U.S. withholding agent makes a payment to an authorized foreign agent, the withholding agent files Forms 1042–S treating the authorized foreign agent as the recipient, provided that the authorized foreign agent reports the payments on Forms 1042–S to each recipient to which it makes payments. If the authorized foreign agent fails to report the amounts paid on Forms 1042–S for each recipient to which the payment is made, the U.S. withholding agent remains responsible for such reporting.

(E) *Dual* Claims. A U.S. withholding agent may make a payment to a foreign entity that is simultaneously claiming a reduced rate of tax on its own behalf for a portion of the payment and a reduced rate on behalf of persons in their capacity as interest holders in that entity on the remaining portion. See §1.1441–6(b)(2)(iii). If the claims are consistent and the withholding agent accepts the multiple claims, the withholding agent must file a separate Form 1042–S for those payments for which the entity is treated as the beneficial owner and Forms 1042–S for each of the interest holder in the entity for which the interest holder is treated as the recipient. For those payments for which the interest holder in an entity is treated as the recipient, the U.S. withholding agent shall prepare the Form 1042–S in the same manner as a payment made to a non-qualified intermediary or flow-through entity as set forth in paragraph (c)(4)(ii) of this section. If the claims are consistent but the withholding agent has not chosen to accept the multiple claims, or if the claims are inconsistent, the withholding agent must file a separate Form 1042–S for the person or persons it has chosen to treat as the recipients.

(ii) *Payments made by U.S. withholding agents to persons that are not recipients*—(A) *Amounts paid to a nonqualified intermediary, a flow-through entity, and certain U.S. branches.* If a U.S. withholding agent makes a payment to a nonqualified intermediary, a flow-through entity, or a U.S. branch described in §1.1441–1(b)(2)(iv) (other than a branch that agrees to be treated as a U.S. person), it must complete a separate Form 1042–S for each recipient to the extent the withholding agent can reliably associate a payment with valid documentation (within the meaning of §1.1441–1(b)(2)(vii)) from the recipient which is associated with the withholding certificate provided by the nonqualified intermediary, flow-through entity, or U.S. branch. If a payment is made through tiers of nonqualified intermediaries or flow-through entities, the withholding agent must nevertheless complete Form 1042–S for the recipients to the extent it can reliably associate the payment with documentation from the recipients. A withholding agent that is completing a Form 1042–S for a recipient that receives a payment through a nonqualified intermediary, a flow-through entity, or a U.S. branch must include on the Form 1042–S the name of the nonqualified intermediary or flow-through entity from which the recipient directly receives the payment. If a U.S. withholding agent cannot reliably associate the payment, or any portion of the payment, with valid documentation from a recipient either because no such documentation has been provided or because the nonqualified intermediary, flow-through entity, or U.S. branch has failed to provide sufficient allocation information so that the withholding agent can associate the payment, or any portion thereof, with valid documentation, then the withholding agent must report the payments as made to an unknown recipient in accordance with the appropriate presumption rules for that payment. Thus, if under the presumption rules the payment is presumed to be made to a foreign person, the withholding agent must generally withhold 30 percent of the payment and report the payment on Form 1042–S made out to an unknown recipient and shall also include the name of the nonqualified intermediary or flow-through entity that received the payment on behalf of the unknown recipient. If, however, the recipient is presumed to be a U.S. non-exempt recipient (as defined in §1.1441–1(c)(21)), the withholding agent must withhold on the payment as required under section 3406 and report the payment as made to an unknown recipient on the appropriate Form 1099 as required under chapter 61 of the Internal Revenue Code.

(B) *Disregarded entities.* If a U.S. withholding agent makes a payment to a disregarded entity but receives a valid withholding certificate or other documentary evidence from a foreign person that is the single owner of a disregarded entity, the withholding agent must file a Form 1042–S treating the foreign single owner as the recipient. The taxpayer identifying number on the Form 1042–S, if required, must be the foreign single owner's TIN.

(iii) *Reporting by qualified intermediaries, withholding foreign partnerships, and withholding foreign trusts.* A qualified intermediary, a withholding foreign partnership, and a withholding foreign trust shall report payments on Form 1042–S as provided in their agreements with the IRS and the instructions to the form.

(iv) *Reporting by a nonqualified intermediary, flow-through entity, and certain U.S. branches.* A nonqualified intermediary, flow-through entity, or U.S. branch described in §1.1441–1(e)(2)(iv) (other than a U.S. branch that is treated as a U.S. person) is a withholding agent and must file Forms 1042–S for amounts paid to recipients in the same manner as a U.S. withholding agent. A Form 1042–S will not be required, however, if another withholding agent has reported the same amount to the same recipient for which the nonqualified intermediary, flow-through entity, or U.S. branch would be required to file a return and the entire amount that should be withheld from such payment has been withheld. A nonqualified intermediary, flow-through entity, or U.S. branch must report payments made to recipients to the extent it has failed to provide the appropriate documentation to another withholding agent together with the information

required for that withholding agent to reliably associate the payment with the recipient documentation or to the extent it knows, or has reason to know, that less than the required amount has been withheld. A nonqualified intermediary or flow-through entity that is required to report a payment on Form 1042–S must follow the same rules as apply to a U.S. withholding agent under paragraph (c)(4)(i) and (ii) of this section.

(v) *Pro rata reporting for allocation failures.* If a nonqualified intermediary, flow-through entity, or U.S. branch described in § 1.1441–1(b)(2)(iv) (other than a branch treated as a U.S. person) that uses the alternative procedures of § 1.1441–1(e)(3)(iv)(D) fails to provide information sufficient to allocate the amount subject to reporting paid to a withholding rate pool to the payees identified for that pool, then the withholding agent shall report the payment in accordance with the rule provided in § 1.1441–1(e)(3)(iv)(D)(*6*).

(vi) *Other withholding agents.* Any person that is a withholding agent not described in paragraph (c)(4)(i), (iii), or (iv) of this section (e.g., a foreign person that is not a qualified intermediary, flow-through entity, or U.S. branch) shall file Form 1042–S in the same manner as a U.S. withholding agent and in accordance with the instructions to the form.

(5) *Magnetic media reporting.* A withholding agent that makes 250 or more Form 1042–S information returns for a taxable year must file Form 1042–S returns on magnetic media. See § 301.6011–2 of this chapter for requirements applicable to a withholding agent that files Forms 1042–S with the IRS on magnetic media and publications of the IRS relating to magnetic media filing.

(d) *Report of taxpayer identifying numbers.* When so required under procedures that the IRS may prescribe in published guidance (see § 601.601(d)(2) of this chapter), a withholding agent must attach to the Form 1042 a list of all the taxpayer identifying numbers (and corresponding names) that have been furnished to the withholding agent and upon which the withholding agent has relied to grant a reduced rate of withholding and that are not otherwise required to be reported on a Form 1042–S under the provisions of this section.

(e) *Indemnification of withholding agent.* A withholding agent is indemnified against the claims and demands of any person for the amount of any tax it deducts and withholds in accordance with the provisions of chapter 3 of the Code and the regulations under that chapter. A withholding agent that withholds based on a reasonable belief that such withholding is required under chapter 3 of the Code and the regulations under that chapter is treated for purposes of section 1461 and this paragraph (e) as having withheld tax in accordance with the provisions of chapter 3 of the Code and the regulations under that chapter. In addition, a withholding agent is indemnified against the claims and demands of any person for the amount of any payments made in accordance with the grace period provisions set forth in § 1.1441–1(b)(3)(iv). This paragraph (e) does not apply to relieve a withholding agent from tax liability under chapter 3 of the Code or the regulations under that chapter.

(f) *Amounts paid not constituting gross income.* Any amount withheld in accordance with § 1.1441–3 shall be reported and paid in accordance with this section, even though the amount paid to the beneficial owner may not constitute gross income in whole or in part. For this purpose, a reference in this section and § 1.1461–2 to an amount shall, where appropriate, be deemed to refer to the amount subject to withholding under § 1.1441–3.

(g) *Extensions of time to file Forms 1042 and 1042–S.* The IRS may grant an extension of time in which to file a Form 1042 or a Form 1042–S. Form 2758, Application for Extension of Time to File Certain Excise, Income, Information, and Other Returns (or such other form as the IRS may prescribe), must be used to request an extension of time for a Form 1042. Form 8809, Request for Extension of Time to File Information Returns (or such other form as the IRS may prescribe) must be used to request an extension of time for a Form 1042–S. The request must contain a statement of the reasons for requesting the extension and such other information as the

forms or instructions may require. It must be mailed or delivered not later than March 15 of the year following the end of the calendar year for which the return will be filed.

(h) *Penalties.* For penalties and additions to the tax for failure to file returns or furnish statements in accordance with this section, see sections 6651, 6662, 6663, 6721, 6722, 6723, 6724(c), 7201, 7203, and the regulations under those sections.

(i) *Effective date.* Unless otherwise provided in this section, this section shall apply to returns required for payments made after December 31, 2000.

[T.D. 8734, 62 FR 53467, Oct. 14, 1997, as amended by T.D. 8804, 63 FR 72188, Dec. 31, 1998; T.D. 8856, 64 FR 73412, Dec. 30, 1999; T.D. 8881, 65 FR 32201, 32212, May 22, 2000; 66 FR 18189, Apr. 6, 2001; T.D. 8952, 66 FR 33831, June 26, 2001; T.D. 9200, 70 FR 28740, May 18, 2005]

§ 1.1461–2 Adjustments for overwithholding or underwithholding of tax.

(a) *Adjustments of overwithheld tax*—(1) *In general.* Except for partnerships or nominees required to withhold under section 1446, a withholding agent that has overwithheld under chapter 3 of the Internal Revenue Code, and made a deposit of the tax as provided in § 1.6302–2(a) may adjust the overwithheld amount either pursuant to the reimbursement procedure described in paragraph (a)(2) of this section or pursuant to the set-off procedure described in paragraph (a)(3) of this section. References in the previous sentence excepting from this section certain partnerships withholding under section 1446 shall apply to partnership taxable years beginning after May 18, 2005, or such earlier time as the regulations under §§ 1.1446–1 through 1.1446–5 apply by reason of an election under § 1.1446–7. Adjustments under this paragraph (a) may only be made within the time prescribed under paragraph (a) (2) or (3) of this section. After such time, a refund of the amount overwithheld can only be claimed by the beneficial owner with the Internal Revenue Service (IRS) pursuant to the procedures described in chapter 65 of the Code. For purposes of this section, the term overwithholding means any amount actually withheld (determined before application of the adjustment procedures under this section) from an item of income pursuant to chapter 3 of the Code or the regulations thereunder in excess of the actual tax liability due, regardless of whether such overwithholding was in error or appeared correct at the time it occurred.

(2) *Reimbursement of tax*—(i) *General rule.* Under the reimbursement procedure, the withholding agent repays the beneficial owner or payee for the amount overwithheld. In such a case, the withholding agent may reimburse itself by reducing, by the amount of tax actually repaid to the beneficial owner or payee, the amount of any deposit of tax made by the withholding agent under § 1.6302–2(a)(1)(iii) for any subsequent payment period occurring before the end of the calendar year following the calendar year of overwithholding. Any such reduction that occurs for a payment period in the calendar year following the calendar year of overwithholding shall be allowed only if—

(A) The withholding agent states, on a timely filed (not including extensions) Form 1042–S for the calendar year of overwithholding, the amount of tax withheld and the amount of any actual repayment; and

(B) The withholding agent states on a timely filed (not including extensions) Form 1042 for the calendar year of overwithholding, that the filing of the Form 1042 constitutes a claim for credit in accordance with § 1.6414–1.

(ii) *Record maintenance.* If the beneficial owner is repaid an amount of withholding tax under the provisions of this paragraph (a)(2), the withholding agent shall keep as part of its records a receipt showing the date and amount of repayment and the withholding agent must provide a copy of such receipt to the beneficial owner. For this purpose, a canceled check or an entry in a statement is sufficient provided that the check or statement contains a specific notation that it is a refund of tax overwithheld.

(3) *Set-offs.* Under the set-off procedure, the withholding agent may repay the beneficial owner or payee by applying the amount overwithheld against any amount which otherwise would be required under chapter 3 of the Code or

the regulations thereunder to be withheld from income paid by the withholding agent to such person before the earlier of the due date (without regard to extensions) for filing the Form 1042–S for the calendar year of overwithholding or the date that the Form 1042–S is actually filed with the IRS. For purposes of making a return on Form 1042 or 1042–S (or an amended form) for the calendar year of overwithholding and for purposes of making a deposit of the amount withheld, the reduced amount shall be considered the amount required to be withheld from such income under chapter 3 of the Code and the regulations thereunder.

(4) *Examples.* The principles of this paragraph (a) are illustrated by the following examples:

Example 1. (i) N is a nonresident alien individual who is a resident of the United Kingdom. In December 2001, a domestic corporation C pays a dividend of $100 to N, at which time C withholds $30 and remits the balance of $70 to N. On February 10, 2002, prior to the time that C files its Form 1042, N furnishes a valid Form W–8 described in §1.1441–1(e)(2)(i) upon which C may rely to reduce the rate of withholding to 15 percent under the provisions of the U.S.–U.K. tax treaty. Consequently, N advises C that its tax liability is only $15 and not $30 and requests reimbursement of $15. Although C has already deposited the $30 that was withheld, as required by §1.6302–2(a)(1)(iv), C repays N in the amount of $15.

(ii) During 2001, C makes no other payments upon which tax is required to be withheld under chapter 3 of the Code; accordingly, its return on Form 1042 for such year, which is filed on March 15, 2002, shows total tax withheld of $30, an adjusted total tax withheld of $15, and $30 previously paid for such year. Pursuant to §1.6414–1(b), C claims a credit for the overpayment of $15 shown on the Form 1042 for 2001. Accordingly, it is permitted to reduce by $15 any deposit required by §1.6302–2 to be made of tax withheld during the calendar year 2002. The Form 1042–S required to be filed by C with respect to the dividend of $100 paid to N in 2001 is required to show tax withheld of $30 and tax released of $15.

Example 2. The facts are the same as in *Example 1.* In addition, during 2002, C makes payments to N upon which it is required to withhold $200 under chapter 3 of the Code, all of which is withheld in June 2002. Pursuant to §1.6302–2(a)(1)(iii), C deposits the amount of $185 on July 15, 2002 ($200 less the $15 for which credit is claimed on the Form 1042 for 2001). On March 15, 2003, C Corporation files its return on Form 1042 for calendar year 2002, which shows total tax withheld of $200, $185 previously deposited by C, and $15 allowable credit.

Example 3. The facts are the same as in *Example 1.* Under §1.6032–2(a)(1)(ii)), C is required to deposit on a quarter-monthly basis the tax withheld under chapter 3 of the Code. C withholds tax of $100 between February 8 and February 15, 2002, and deposits $75 [($100×90 percent) less $15] of the withheld tax within 3 banking days after February 15, 2002, and by depositing $10 [($100−$15) less $75] within 3 banking days after March 15, 2002.

(b) *Withholding of additional tax when underwithholding occurs.* A withholding agent may withhold from future payments (or distributions of effectively connected income under section 1446) made to a beneficial owner the tax that should have been withheld from previous payments (or distributions subject to section 1446) to such beneficial owner under chapter 3 of the Internal Revenue Code. In the alternative, the withholding agent may satisfy the tax from property that it holds in custody for the beneficial owner or property over which it has control. Such additional withholding or satisfaction of the tax owed may only be made before the date that the Form 1042 is required to be filed (not including extensions) for the calendar year in which the underwithholding occurred. See §1.6302–2 for making deposits of tax or §1.1461–1(a) for making payment of the balance due for a calendar year. See also §§1.1461–1, 1.1461–3, and 1.1446–1 through 1.1446–7 for rules relating to withholding under section 1446. References in this paragraph (b) to withholding under section 1446 shall apply to partnership taxable years beginning after May 18, 2005, or such earlier time as the regulations under §§1.1446–1 through 1.1446–5 apply by reason of an election under §1.1446–7.

(c) *Definition.* For purposes of this section, the term *payment period* means the period for which the withholding agent is required by §1.6302–2(a)(1) to make a deposit of tax withheld under chapter 3 of the Code.

(d) *Effective date.* Unless otherwise provided in this section, this section

applies to payments made after December 31, 2000.

[T.D. 8734, 62 FR 53470, Oct. 14, 1997, as amended by T.D. 8804, 63 FR 72188, Dec. 31, 1998; T.D. 8856, 64 FR 73412, Dec. 30, 1999; T.D. 9200, 70 FR 28741, May 18, 2005]

§ 1.1461–3 Withholding under section 1446.

For rules relating to the withholding tax liability of a partnership or nominee under section 1446, see §§ 1.1446–1 through 1.1446–7. For interest, penalties, and additions to the tax for failure to timely pay the tax required to be paid under section 1446, see sections 6601, 6651, 6655 (in the case of publicly traded partnerships, see section 6656), 6672, and 7202 and the regulations under those sections. For additional penalties and additions to the tax for failure to comply with the regulations under section 1446, see sections 6651, 6662, 6663, 6721, 6722, 6723, 6724(c), 7201, 7203, and the regulations under those sections. This section shall apply to partnership taxable years beginning after May 18, 2005, or such earlier time as the regulations under §§ 1.1446–1 through 1.1446–5 apply by reason of an election under § 1.1446–7.

[T.D. 9200, 70 FR 28741, May 18, 2005]

§ 1.1462–1 Withheld tax as credit to recipient of income.

(a) *Creditable tax.* The entire amount of the income from which the tax is required to be withheld (including amounts calculated under the gross-up formula in § 1.1441–3(f)(1)) shall be included in gross income in the return required to be made by the beneficial owner of the income, without deduction for the amount required to be or actually withheld, but the amount of tax actually withheld shall be allowed as a credit against the total income tax computed in the beneficial owner's return.

(b) *Amounts paid to persons who are not the beneficial owner.* Amounts withheld at source under chapter 3 of the Internal Revenue Code on payments to (or effectively connected taxable income allocable to) a fiduciary, partnership, or intermediary are deemed to have been paid by the taxpayer ultimately liable for the tax upon such income. Thus, for example, if a beneficiary of a trust is subject to the taxes imposed by section 1, 2, 3, or 11 upon any portion of the income received from a foreign trust, the part of any amount withheld at source which is properly allocable to the income so taxed to such beneficiary shall be credited against the amount of the income tax computed upon the beneficiary's return, and any excess shall be refunded. See § 1.1446–3 for examples applying this rule in the context of a partnership interest held by a foreign trust or estate. Further, if a partnership withholds an amount under chapter 3 of the Internal Revenue Code with respect to the allocable share of a partner that is a partnership (upper-tier partnership) or with respect to the allocable share of partners in an upper-tier partnership, such amount is deemed to have been withheld by the upper-tier partnership. See § 1.1446–5 for rules applicable to tiered partnership structures. References in this paragraph (b) to withholding under section 1446 shall apply to partnership taxable years beginning after May 18, 2005, or such earlier time as the regulations under §§ 1.1446–1 through 1.1446–5 apply by reason of an election under § 1.1446–7.

(c) *Effective date.* Unless otherwise provided in this section, this section applies to payments made after December 31, 2000.

[T.D. 8734, 62 FR 53471, Oct. 14, 1997, as amended by T.D. 8804, 63 FR 72188, Dec. 31, 1998; T.D. 9200, 70 FR 28741, May 18, 2005]

§ 1.1463–1 Tax paid by recipient of income.

(a) *Tax paid.* If the tax required to be withheld under chapter 3 of the Internal Revenue Code is paid by the beneficial owner of the income or by the withholding agent, it shall not be recollected from the other, regardless of the original liability therefor. However, this section does not relieve the person that did not withhold tax from liability for interest or any penalties or additions to tax otherwise applicable. See § 1.1441–7(b) for additional applicable rules. See § 1.1446–3(e) and (f) for application of the rule of this paragraph (a), and for additional rules, where the withholding tax was required

to be paid under section 1446. The previous sentence shall apply to partnership taxable years beginning after May 18, 2005, or such earlier time as the regulations under §§1.1446–1 through 1.1446–5 apply by reason of an election under §1.1446–7.

(b) *Effective date.* Unless otherwise provided in this section, this section applies to failures to withhold occurring after December 31, 2000.

[T.D. 8734, 62 FR 53471, Oct. 14, 1997, as amended by T.D. 8804, 63 FR 72188, Dec. 31, 1998; T.D. 8856, 64 FR 73412, Dec. 30, 1999; T.D. 9200, 70 FR 28741, May 18, 2005]

§ 1.1464–1 Refunds or credits.

(a) *In general.* The refund or credit under chapter 65 of the Code of an overpayment of tax which has actually been withheld at the source under chapter 3 of the Code shall be made to the taxpayer from whose income the amount of such tax was in fact withheld. To the extent that the overpayment under chapter 3 was not in fact withheld at the source, but was paid, by the withholding agent the refund or credit under chapter 65 of the overpayment shall be made to the withholding agent. Thus, where a debtor corporation assumes liability pursuant to its tax-free covenant for the tax required to be withheld under chapter 3 upon interest and pays the tax in behalf of its bondholder, and it can be shown that the bondholder is not in fact liable for any tax, the overpayment of tax shall be credited or refunded to the withholding agent in accordance with chapter 65 since the tax was not actually deducted and withheld from the interest paid to the bondholder. In further illustration, where a withholding agent who is required by chapter 3 to withhold $300 tax from rents paid to a nonresident alien individual mistakenly withholds $320 and mistakenly pays $350 as internal revenue tax, the amount of $30 shall be credited or refunded to the withholding agent in accordance with chapter 65 and the amount of $20 shall be credited or refunded in accordance with such chapter to the person from whose income such amount has been withheld.

(b) *Tax repaid to payee.* For purposes of this section and §1.6414–1, any amount of tax withheld under chapter 3 of the Code, which, pursuant to paragraph (a)(1) of §1.1461–2, is repaid by the withholding agent to the person from whose income such amount was erroneously withheld shall be considered as tax which, within the meaning of sections 1464 and 6414, was not actually withheld by the withholding agent.

[T.D. 6922, 32 FR 8713, June 17, 1967, as amended by T.D. 8804, 63 FR 72188, Dec. 31, 1998]

RULES APPLICABLE TO RECOVERY OF EXCESSIVE PROFITS ON GOVERNMENT CONTRACTS

RECOVERY OF EXCESSIVE PROFITS ON GOVERNMENT CONTRACTS

§ 1.1471–1 Recovery of excessive profits on government contracts.

The inclusion of the statutory provisions of section 1471 in this part does not supersede the provisions of 26 CFR (1939) part 17 (Treasury Decision 4906) and 26 CFR (1939) part 16 (Treasury Decision 4909) as made applicable to section 1471 by Treasury Decision 6091 (19 FR 5167, C.B. 1954–2, 47).

[T.D. 6500, 25 FR 12081, Nov. 26, 1960]

EDITORIAL NOTE: For the convenience of the user, the text of parts 16 and 17 (not entirely superseded) of 26 CFR (1939) referred to above is set forth below:

PART 16—EXCESS PROFITS ON ARMY CONTRACTS FOR AIRCRAFT

REGULATIONS UNDER SECTION 14 OF THE ACT OF APRIL 3, 1939, AND OTHER PROVISIONS

AUTHORITY: Sections 16.1 to 16.18 issued under 52 Stat. 467; 26 U.S.C. 3791. Interpret or apply sec. 3, 48 Stat. 505, as amended, sec. 14, 53 Stat. 560; 34 U.S.C. 496, 10 U.S.C. 311, 312.2206

SOURCE: Sections 16.1 to 16.18 contained in T.D. 4909, 4 FR 2733, July 1, 1939, except as otherwise noted.

§16.1 *Definitions.* As used in the regulations in this part the term:

(a) ''Act'' means the act of April 3, 1939 (53 Stat. 560; 10 U.S.C. 311, 312, 34 U.S.C. 496), together with the applicable provisions of section 3 of the act of March 27, 1934, 48 Stat. 505; 34 U.S.C. 496, as amended by the act of June 25, 1936, 49 Stat. 1926; 34 U.S.C., Sup. IV, 496, and as further amended by the act of April 3, 1939 (53 Stat. 560; 34 U.S.C. 496).

(b) ''Person'' includes an individual, a corporation, a partnership, a trust or estate, a joint-stock company, an association, or a

syndicate, group, pool, joint venture or other unincorporated organization or group, through or by means of which any business, financial operation or venture is carried on.

(c) ''Contract'' means an agreement made by authority of the Secretary of the Army for the construction or manufacture of any complete aircraft or any portion thereof for the Army.

(d) ''Contractor'' means a person entering into a direct contract with the Secretary of the Army or his duly authorized representative.

(e) ''Subcontract'' means an agreement entered into by one person with another person for the construction or manufacture of any complete aircraft or any portion thereof for the Army, the prime contract for such aircraft or portion thereof having been entered into between a contractor and the Secretary of the Army or his duly authorized representative.

(f) ''Subcontractor'' means any person other than a contractor entering into a subcontract.

(g) ''Contracting party'' means a contractor or subcontractor as the case may be.

(h) ''Contract price'' or ''total contract price'' means the amount or total amount to be received under a contract or subcontract as the case may be.

(i) ''Income-taxable year'' means the calendar year, the fiscal year ending during such calendar year, or the fractional part of such calendar or fiscal year, upon the basis of which the contracting party's net income is computed and for which its income tax returns are made for Federal income tax purposes.

§ 16.2 *Contracts and subcontracts under which excess profit liability may be incurred.* Except as otherwise provided with respect to contracts or subcontracts for certain scientific equipment (see § 16.3), every contract awarded for an amount exceeding $10,000 and entered into after the enactment of the act of April 3, 1939 for the construction or manufacture of any complete aircraft or any portion thereof for the Army, is subject to the provisions of the act relating to excess profit liability. Any subcontract made with respect to such a contract and involving an amount in excess of $10,000 is also within the scope of the act. If a contracting party places orders with another party, aggregating an amount in excess of $10,000, for articles or materials which constitute a part of the cost of performing the contract or subcontract, the placing of such orders shall constitute a subcontract within the scope of the act, unless it is clearly shown that each of the orders involving $10,000 or less is a bona fide separate and distinct subcontract and not a subdivision made for the purpose of evading the provisions of the act.

§ 16.3 *Contracts or subcontracts for scientific equipment.* No excess profit liability is incurred upon a contract or subcontract entered into after the enactment of the act of April 3, 1939, if at the time or prior to the time such contract or subcontract is made it is designated by the Secretary of the Army as being exempt under the provisions of the act pertaining to scientific equipment used for communication, target detection, navigation, and fire control.

§ 16.4 *Completion of contract defined.* The date of delivery of the aircraft or portion thereof covered by the contract or subcontract shall be considered the date of completion of the contract or subcontract unless otherwise determined jointly by the Secretary of the Army and the Secretary of the Treasury or their duly authorized representatives. Except as otherwise provided in the preceding sentence, the replacement of defective parts or delivered articles or the performance of other guarantee work in respect of such articles will not operate to extend the date of completion. As to the treatment of the cost of such work as a cost of performing a contract or subcontract, see § 16.8(h). As to a refund in case of adjustment due to any subsequently incurred additional costs, see § 16.18. If a contract or subcontract is at any time cancelled or terminated, it is completed at the time of the cancellation or termination.

§ 16.5 *Manner of determining liability.* (a) The first step in the determination of the excess profit to be paid to the United States by a contracting party with respect to contracts and subcontracts completed within an income-taxable year is to ascertain the total contract prices of all contracts and subcontracts completed by the contracting party within the income-taxable year. As to total contract prices, see § 16.7.

(b) The second step is to ascertain the cost of performing such contracts and subcontracts and to deduct such cost from the total contract prices of such contracts and subcontracts as computed in the first step. See § 16.8. The amount remaining after such subtraction is the amount of net profit or net loss upon the contracts and subcontracts completed within the income-taxable year.

(c) The third step, in case there is a net profit upon such contracts and subcontracts, is to subtract from the amount of such net profit as computed in the second step the sum of:

(1) An amount equal to 12 percent of the total contract prices of the contracts and subcontracts completed within the income-taxable year;

(2) The amount of any net loss allowable as a credit in determining the excess profit for the income-taxable year (see § 16.9); and

(3) The amount of any deficiency in profit allowable as a credit in determining the excess profit for the income-taxable year (see

§ 16.9). The amount remaining after such subtraction is the amount of excess profit for the income-taxable year.

(d) The fourth step is to ascertain the amount of credit allowed for Federal income taxes paid or remaining to be paid upon the amount of such excess profit (see § 16.10) and then subtract from the amount of such excess profit the amount of credit for Federal income taxes. The amount remaining after this subtraction is the amount of excess profit to be paid to the United States by the contracting party for the income-taxable year.

[T.D. 4909, 4 FR 2733, July 1, 1939, as amended by T.D. 6511, 25 FR 12442, Dec. 6, 1960]

§ 16.6 *Computation of excess profit liability.* The application of the provisions of § 16.5 may be illustrated by the following example:

Example. On September 1, 1939, the B Corporation, which keeps its books and makes its Federal income tax returns on a calendar year basis, entered into a contract for the construction of Army aircraft coming within the scope of the act, the total contract price of which was $200,000. On March 10, 1940, the corporation entered into another such contract, the total contract price of which was $40,000. Both contracts were completed within the calendar year 1940, the first at a cost of $155,000 and the second at a cost of $45,000. During the year 1940, the B Corporation also completed at a deficiency in profit of $2,000 a contract entered into after April 3, 1939, for the construction of naval aircraft coming within the scope of 10 U.S.C. 2382 (formerly section 3 of the Act of March 27, 1934 (48 Stat. 505)). For the year 1939, the B Corporation sustained a net loss of $1,500 and a deficiency in profit of $1,000 on all contracts and subcontracts entered into after April 3, 1939, for Army aircraft coming within the scope of the act and completed within the calendar year 1939. For the year 1939, the B Corporation also sustained a net loss of $1,000 on a contract, entered into after April 3, 1939, and completed within the calendar year 1939, for naval aircraft coming within the scope of 10 U.S.C. 2382 (formerly section 3 of the Act of March 27, 1934 (48 Stat. 505)). For purposes of the Federal income tax, the net income of the B Corporation for the year 1940, on which the tax was paid, amounted to $96,000, which included the total net profit of $40,000 upon the two contracts entered into on September 1, 1939, and March 10, 1940. The excess profit liability is $4,332, computed as follows:

Total contract prices:		
Contract No. 1	$200,000	
Contract No. 2	40,000	
		$240,000
Less: Cost of performing contracts:		
Contract No. 1	155,000	
Contract No. 2	45,000	
		$200,000
Net profit on contracts		$40,000
Less:		
12 percent of total contract prices (12 percent of $240,000)	$28,800	
Deficiency in profit (in naval aircraft contracts) in 1940	2,000	
Net loss (in Army aircraft contracts) from 1939	1,500	
Net loss (in naval aircraft contracts) from 1939	1,000	
Deficiency in profit (in Army aircraft contracts) from 1939	1,000	.....
Excess profit for year 1940		5,700
Less: Credit for Federal income taxes (Federal income tax on $5,700 at rates for 1940)		1,368
		34,300
Amount of excess profit payable to the United States		4,332

[T.D. 4909, 4 FR 2733, July 1, 1939, as amended by T.D. 6511, 25 FR 12442, Dec. 6, 1960]

§ 16.7 *Total contract price.* The total contract price of a particular contract or subcontract (see § 16.1) may be received in money or its equivalent. If something other than money is received, only the fair market value of the thing received, at the date of receipt, is to be included in determining the amount received. Bonuses earned for bettering performance and penalties incurred for failure to meet the contract guarantees are to be regarded as adjustments of the original contract price. Trade or other discounts granted by a contracting party in respect of a contract or subcontract performed by such party are also to be deducted in determining the true total contract price of such contract or subcontract.

§ 16.8 *Cost of performing a contract or subcontract*—(a) *General rule.* The cost of performing a particular contract or subcontract shall be the sum of (1) the direct costs, including therein expenditures for materials, direct labor and direct expenses, incurred by the contracting party in performing the contract or subcontract; and (2) the proper proportion of any indirect costs (including therein a reasonable proportion of management expenses) incident to and necessary for the performance of the contract or subcontract.

(b) *Elements of cost.* No definitions of the elements of cost may be stated which are of invariable application to all contractors and subcontractors. In general, the elements of cost may be defined for purposes of the act as follows:

(1) Manufacturing cost, which is the sum of factory cost (see paragraph (c) of this section) and other manufacturing cost (see paragraph (d) of this section);

(2) Miscellaneous direct expenses (see paragraph (e) of this section);

(3) General expenses, which are the sum of indirect engineering expenses, usually termed ''engineering overhead'' (see paragraph (f) of this section) and expenses of distribution, servicing and administration (see paragraph (g) of this section); and

(4) Guarantee expenses (see paragraph (h) of this section).

(c) *Factory cost.* Factory cost is the sum of the following:

(1) *Direct materials.* Materials, such as those purchased for stock and subsequently issued for contract operations and those acquired under subcontracts, which become a component part of the finished product or which are used directly in fabricating, converting or processing such materials or parts.

(2) *Direct productive labor.* Productive labor, usually termed ''shop labor,'' which is performed on and is properly chargeable directly to the article manufactured or constructed pursuant to the contract or subcontract, but which ordinarily does not include direct engineering labor (see subparagraph (3) of this paragraph).

(3) *Direct engineering labor.* The compensation of professional engineers and other technicists (including reasonable advisory fees), and of draftsmen, properly chargeable directly to the cost of the contract or subcontract.

(4) *Miscellaneous direct factory charges.* Items which are properly chargeable directly to the factory cost of performing the contract or subcontract but which do not come within the classifications in subparagraphs (1), (2), and (3) of this paragraph, as for example, royalties which the contracting party pays to another party and which are properly chargeable to the cost of performing the contract or subcontract (but see paragraph (d) of this section).

(5) *Indirect factory expenses.* Items, usually termed ''factory overhead,'' which are not directly chargeable to the factory cost of performing the contract or subcontract but which are properly incident to and necessary for the performance of the contract or subcontract and consist of the following:

(i) *Labor.* Amounts expended for factory labor, such as supervision and inspection, clerical labor, timekeeping, packing and shipping, stores supply, services of tool crib attendants, and services in the factory employment bureau, which are not chargeable directly to productive labor of the contract or subcontract.

(ii) *Materials and supplies.* The cost of materials and supplies for general use in the factory in current operations, such as shop fuel, lubricants, heat-treating, plating, cleaning and anodizing supplies, nondurable tools and gauges, stationery (such as time tickets and other forms), and boxing and wrapping materials.

(iii) *Service expenses.* Factory expenses of a general nature, such as those for power, heat and light (whether purchased or produced), ventilation and air-conditioning and operation and maintenance of general plant assets and facilities.

(iv) *Fixed charges and obsolescence.* Recurring charges with respect to property used for manufacturing purposes of the contract or subcontract, such as premiums for fire and elevator insurance, property taxes, rentals and allowances for depreciation of such property, including maintenance and depreciation of reasonable stand-by equipment; and depreciation and obsolescence of special equipment and facilities necessarily acquired primarily for the performance of the contract or subcontract. In making allowances for depreciation, consideration shall be given to the number and length of shifts.

(v) *Miscellaneous indirect factory expenses.* Miscellaneous factory expenses not directly chargeable to the factory cost of performing the contract or subcontract, such as purchasing expenses; ordinary and necessary expenses of rearranging facilities within a department or plant; employees' welfare expenses; premiums or dues on compensation insurance; employers' payments to unemployment, old age and social security Federal and State funds not including payments deducted from or chargeable to employees or officers; pensions and retirement payments to factory employees; factory accident compensation (as to self-insurance, see paragraph (g) of this section); but not including any amounts which are not incident to services, operations, plant, equipment or facilities involved in the performance of the contract or subcontract.

(d) *Other manufacturing cost.* Other manufacturing cost as used in paragraph (b) of this section includes items of manufacturing costs which are not properly or satisfactorily chargeable to factory costs (see paragraph (c) of this section) but which upon a complete showing of all pertinent facts are properly to be included as a cost of performing the contract or subcontract, as for instance, payments of royalties and amortization of the cost of designs purchased and patent rights over their useful life; and ''deferred'' or ''unliquidated'' experimental and development charges. For example, in case experimental and development costs have been properly deferred or capitalized and are amortized in accordance with a reasonably consistent plan, a proper portion of the current charge, determined by a ratable allocation which is reasonable in consideration of the pertinent facts, may be treated as a cost of performing the contract or subcontract. In

the case of general experimental and development expenses which may be charged off currently, a reasonable portion thereof may be allocated to the cost of performing the contract or subcontract. If a special experimental or development project is carried on in pursuance of a contract, or in anticipation of a contract which is later entered into, and the expense is not treated as a part of general experimental and development expenses or is not otherwise allowed as a cost of performing the contract, there clearly appearing no reasonable prospect of an additional contract for the type of article involved, the entire cost of such project may be allowed as a part of the cost of performing the contract.

(e) *Miscellaneous direct expenses.* Miscellaneous direct expenses as used in paragraph (b) of this section include:

(1) *Cost of installation and construction.* Cost of installation and construction includes the cost of materials, labor and expenses necessary for the erection and installation prior to the completion of the contract and after the delivery of the product or material manufactured or constructed pursuant to the contract or subcontract.

(2) *Sundry direct expenses.* Items of expense which are properly chargeable directly to the cost of performing a contract or subcontract and which do not constitute guarantee expenses (see paragraph (h) of this section) or direct costs classified as factory cost or other manufacturing cost (see paragraphs (c) and (d) of this section), such as premiums on performance or other bonds required under the contract or subcontract; State sales taxes imposed on the contracting party; freight on outgoing shipments; fees paid for wind tunnel and model basin tests; demonstration and test expenses; crash insurance premiums; traveling expenses. In order for any such item to be allowed as a charge directly to the cost of performing a contract or subcontract, (i) a detailed record shall be kept by the contracting party of all items of a similar character, and (ii) no item of a similar character which is properly a direct charge to other work shall be allowed as a part of any indirect expenses in determining the proper proportion thereof chargeable to the cost of performing the contract or subcontract. As to allowable indirect expenses, see paragraphs (c)(5), (f), (g) and (j) of this section.

(f) *Indirect engineering expenses.* Indirect engineering expenses, usually termed ''engineering overhead,'' which are treated in this section as a part of general expenses in determining the cost of performing a contract or subcontract (see paragraph (b) of this section), comprise the general engineering expenses which are incident to and necessary for the performance of the contract or subcontract, such as the following:

(1) *Labor.* Reasonable fees of engineers employed in a general consulting capacity, and compensation of employees for personal services to the engineering department, such as supervision, which is properly chargeable to the contract or subcontract, but which is not chargeable as direct engineering labor (see paragraph (c)(3) of this section).

(2) *Material.* Supplies for the engineering department, such as paper and ink for drafting and similar supplies.

(3) *Miscellaneous expenses.* Expenses of the engineering department, such as (i) maintenance and repair of engineering equipment, and (ii) services purchased outside of the engineering department for blue printing, drawing, computing, and like purposes.

(g) *Expenses of distribution, servicing and administration.* Expenses of distribution, servicing and administration, which are treated in this section as a part of general expenses in determining the cost of performing a contract or subcontract (see paragraph (b) of this section), comprehend the expenses incident to and necessary for the performance of the contract or subcontract, which are incurred in connection with the distribution and general servicing of the contracting party's products and the general administration of the business, such as:

(1) *Compensation for personal services of employees.* The salaries of the corporate and general executive officers and the salaries and wages of administrative clerical employees and of the office services employees such as telephone operators, janitors, cleaners, watchmen and office equipment repairmen.

(2) *Bidding and general selling expenses.* Bidding and general selling expenses which by reference to all the pertinent facts and circumstances reasonably constitute a part of the cost of performing a contract or subcontract. The treatment of bidding and general selling expenses as a part of general expenses in accordance with this paragraph is in lieu of any direct charges which otherwise might be made for such expenses. The term ''bidding expenses'' as used in this section includes all expenses in connection with preparing and submitting bids.

(3) *General servicing expenses.* Expenses which by reference to all the pertinent facts and circumstances reasonably constitute a part of the cost of performing a contract or subcontract and which are incident to delivered or installed articles and are due to ordinary adjustments or minor defects; but including no items which are treated as a part of guarantee expenses (see paragraph (h) of this section) or as a part of direct costs, such as direct materials, direct labor, and other direct expense.

(4) *Other expenses.* Miscellaneous office and administrative expenses, such as stationery and office supplies; postage; repair and depreciation of office equipment; contributions to local charitable or community organizations to the extent constituting ordinary and

necessary business expenses; employees' welfare expenses; premiums and dues on compensation insurance; employers' payments to unemployment, old age and social security Federal and State funds not including payments deducted from or chargeable to employees or officers; pensions and retirement payments to administrative office employees and accident compensation to office employees (as to self-insurance, see subdivision (i) of this subparagraph.

(i) Subject to the exception stated in this subdivision, in cases where a contracting party assumes its own insurable risks (usually termed ''self-insurance''), losses and payments will be allowed in the cost of performing a contract or subcontract only to the extent of the actual losses suffered or payments incurred during, and in the course of, the performance of the contract or subcontract and properly chargeable to such contract or subcontract. If however, a contracting party assumes its own insurable risks (a) for compensation paid to employees for injuries received in the performance of their duties, or (b) for unemployment risks in States where insurance is required, there may be allowed as a part of the cost of performing a contract or subcontract a reasonable portion of the charges set up for purposes of self-insurance under a system of accounting regularly employed by the contracting party, as determined by the Commissioner of Internal Revenue, at rates not exceeding the lawful or approved rates of insurance companies for such insurance, reduced by amounts representing the acquisition cost in such companies, provided the contracting party adopts and consistently follows this method with respect to self-insurance in connection with all contracts and subcontracts subsequently performed by him.

(ii) Allowances for interest on invested capital are not allowable as costs of performing a contract or subcontract.

(iii) Among the items which shall not be included as a part of the cost of performing a contract or subcontract or considered in determining such cost, are the following: Entertainment expenses; dues and memberships other than of regular trade associations; donations except as otherwise provided above; losses on other contracts; profits or losses from sales or exchanges of capital assets; extraordinary expenses due to strikes or lockouts; fines and penalties; amortization of unrealized appreciation of values of assets; expenses, maintenance and depreciation of excess facilities (including idle land and building, idle parts of a building, and excess machinery and equipment) vacated or abandoned, or not adaptable for future use in performing contracts or subcontracts; increases in reserve accounts for contingencies, repairs, compensation insurance (except as above provided with respect to self-insurance) and guarantee work; Federal and State income and excess-profits taxes and surtaxes; cash discount earned up to one percent of the amount of the purchase, except that all discounts on subcontracts subject to the act will be considered; interest incurred or earned; bond discount or finance charges; premiums for life insurance on the lives of officers; legal and accounting fees in connection with reorganizations, security issues, capital stock issues and the prosecution of claims against the United State (including income tax matters); taxes and expenses on issues and transfers of capital stock; losses on investments; bad debts; and expenses of collection and exchange.

(iv) In order that the cost of performing a contract or subcontract may be accounted for clearly, the amount of any excess profits repayable to the United States pursuant to the act should not be charged to or included in such cost.

(h) *Guarantee expenses.* Guarantee expenses include the various items of factory cost, other manufacturing cost, cost of installation and construction, indirect engineering expenses and other general expenses (see paragraphs (c) to (g), of this section) which are incurred after delivery or installation of the article manufactured or constructed pursuant to the particular contract or subcontract and which are incident to the correction of defects or deficiencies which the contracting party is required to make under the guarantee provisions of the particular contract or subcontract. If the total amount of such guarantee expenses is not ascertainable at the time of filing the report required to be filed with the district director of internal revenue (see §16.15) and the contracting party includes any estimated amount of such expenses as part of the claimed total cost of performing the contract or subcontract, such estimated amount shall be separately shown on the report and the reasons for claiming such estimated amount shall accompany the report; but only the amount of guarantee expenses actually incurred will be allowed. If the amount of guarantee expenses actually incurred is greater than the amount (if any) claimed on the report and the contracting party has made an overpayment of excess profit, a refund of the overpayment shall be made in accordance with the provisions of §16.18. If the amount of guarantee expenses actually incurred is less than the amount claimed on the report and an additional amount of excess profit is determined to be due, the additional amount of excess profit shall be assessed and paid in accordance with the provisions of §16.18.

(i) *Unreasonable compensation.* (1) The salaries and compensation for services which are treated as a part of the cost of performing a contract or subcontract include reasonable payments for salaries, bonuses, or other compensation for services. As a general rule,

bonuses paid to employees (and not to officers) in pursuance of a regularly established incentive bonus system may be allowed as a part of the cost of performing a contract or subcontract.

(2) The test of allowability is whether the aggregate compensation paid to each individual is for services actually rendered incident to, and necessary for, the performance of the contract or subcontract, and is reasonable. Excessive or unreasonable payments, whether in cash, stock or other property ostensibly as compensation for services shall not be included in the cost of performing a contract or subcontract.

(j) *Allocation of indirect costs.* No general rule applicable to all cases may be stated for ascertaining the proper proportion of the indirect costs to be allocated to the cost of performing a particular contract or subcontract. Such proper proportion depends upon all the facts and circumstances relating to the performance of the particular contract or subcontract. Subject to a requirement that all items which have no relation to the performance of the contract or subcontract shall be eliminated from the amount to be allocated, the following methods of allocation are outlined as acceptable in a majority of cases:

(1) *Factory indirect expenses.* The allowable indirect factory expenses (see paragraph (c)(5) of this section) shall ordinarily be allocated or ''distributed'' to the cost of the contract or subcontract on the basis of the proportion which the direct productive labor (see paragraph (c)(2) of this section) attributable to the contract or subcontract bears to the total direct productive labor of the production department or particular section thereof during the period within which the contract or subcontract is performed, except that if the indirect factory expenses are incurred in different amounts and in different proportions by the various producing departments consideration shall be given to such circumstances to the extent necessary to make a fair and reasonable determination of the true profit and excess profit.

(2) *Engineering indirect expenses.* The allowable indirect engineering expenses (see paragraph (f) of this section) shall ordinarily be allocated or ''distributed'' to the cost of the contract or subcontract on the basis of the proportion which the direct engineering labor attributable to the contract or subcontract (see paragraph (c)(3) of this section) bears to the total direct engineering labor of the engineering department or particular section thereof during the period within which the contract or subcontract is performed. If the expenses of the engineering department are not sufficient in amount to require the maintenance of separate accounts, the engineering indirect costs may be included in the indirect factory expenses (see paragraph (c)(5) of this section) and allocated or distributed to the cost of performing the contract or subcontract as a part of such expenses, provided the proportion so allocated or distributed is proper under the facts and circumstances relating to the performance of the particular contract or subcontract.

(3) *Administrative expenses (or ''overhead'').* The allowable expenses of administration (see paragraph (g) of this section) or other general expenses except indirect engineering expenses, bidding and general selling expenses, and general servicing expenses shall ordinarily be allocated or distributed to the cost of performing a contract or subcontract on the basis of the proportion which the sum of the manufacturing cost (see paragraph (b) of this section) and the cost of installation and construction (see paragraph (e) of this section) attributable to the particular contract or subcontract bears to the sum of the total manufacturing cost and the total cost of installation and construction during the period within which the contract or subcontract is performed.

(4) *Bidding, general selling, and general servicing expenses.* The allowable bidding and general selling expenses and general servicing expenses (see paragraph (g) (2) and (3) of this section) shall ordinarily be allocated or distributed to the cost of performing a contract or subcontract on the basis of:

(i) The proportion which the contract price of the particular contract or subcontract bears to the total sales made(including contracts or subcontracts completed) during the period within which the particular contract or subcontracts is performed, or

(ii) The proportion which the sum of the manufacturing cost (see paragraph (b) of this section) and the cost of installation and construction (see paragraph (e) of this section) attributable to the particular contract or subcontract bears to the sum of the total manufacturing cost and the total cost of installation and construction during the period within which the contract or subcontract is performed,

except that special consideration shall be given to the relation which certain classes of such expenses bear to the various classes of articles produced by the contracting party in each case in which such consideration is necessary in order to make a fair and reasonable determination of the true profit and excess profit. See § 16.13.

§ 16.9 *Credit for net loss or for deficiency in profit in computing excess profit.* (a) The term ''net loss'' as used in the act and as applied to contracts and subcontracts for aircraft or portions thereof coming within the regulations prescribed under the act or under 10 U.S.C. 2382 (formerly section 3 of the Act of March 27, 1934 (48 Stat. 505)) means the amount by which the total cost of performing all such contracts and subcontracts

for aircraft entered into after April 3, 1939, and completed by a particular contracting party within the income-taxable year exceeds the total contract prices of such contracts and subcontracts. As to the meaning of income-taxable year, see § 16.1.

(b) The term ''deficiency in profit'', as used in the act and as applied to contracts and subcontracts for aircraft or portions thereof coming within the regulations prescribed under the act or under 10 U.S.C. 2882 (formerly section 3 of the Act of March 27, 1934 (48 Stat. 505)), means the amount by which 12 percent of the total contract prices of all such contracts and subcontracts for aircraft entered into after April 3, 1939, and completed by a particular contracting party within the income-taxable year exceeds the net profit upon all such contracts and subcontracts.

(c) A net loss or a deficiency in profit sustained by a contracting party for an income-taxable year is allowable as a credit in computing the contracting party's excess profit on contracts and subcontracts for aircraft coming within the regulations prescribed under the act or under 10 U.S.C. 2382 (formerly section 3 of the Act of March 27, 1934 (48 Stat. 505)) and completed during the four next succeeding income-taxable years. Credit for such a net loss or deficiency in profit may be claimed in the contracting party's annual report of profit filed with the district director of internal revenue (see § 16.15), but it shall be supported by separate schedules for each contract or subcontract involved showing total contract prices, costs of performance and pertinent facts relative thereto, together with a summarized computation of the net loss or deficiency in profit. The net loss or deficiency in profit claimed is subject to verification and adjustment. As to preservation of books and records, see § 16.13.

(d) Net loss or deficiency in profit sustained on contracts and subcontracts completed within one income-taxable year may not be considered in computing net loss or deficiency in profit sustained on contracts and subcontracts completed within another income-taxable year.

(e) The provisions of this section may be illustrated by the following example:

Example. For the calendar year 1939, the A Corporation, which keeps its books and makes its Federal income tax returns on a calendar year basis, sustained a net loss of $30,000 on the contracts and subcontracts for Army aircraft and portions thereof coming within the scope of the act and completed within that year. During the year 1939, the A Corporation also completed contracts for naval aircraft coming within the scope of 10 U.S.C. 2382 (formerly section 3 of the Act of March 27, 1934 (48 Stat. 505)) at a deficiency in profit of $10,000. In 1940, the A Corporation completed similar contracts for Army aircraft totaling $175,000 at a cost of $155,000, whereby the A Corporation realized a net profit of $20,000 but sustained a deficiency in profit of $1,000 (i.e., 12 percent of $175,000, or $21,000, less $20,000. During the year 1940, the A Corporation also completed contracts for naval aircraft coming within the scope of 10 U.S.C. 2382 (formerly section 3 of the Act of March 27, 1934 (48 Stat. 505)) at a net loss of $2,000. In 1941, the A Corporation completed contracts for Army aircraft coming within the scope of the act totaling $400,000 at a cost of $300,000, or at a net profit of $100,000. After deducting from the net profit of $100,000 for the year 1941 the amount of $48,000 (i.e., 12 percent of the total contract price of $400,000), there remains $52,000 in excess profit on the contracts completed in the year 1941. The A Corporation may deduct from such $52,000, in determining the amount of excess profit it must pay for the year 1941 with respect to the contracts completed in such year, the net loss of $30,000 and the deficiency in profit of $10,000 sustained in 1939 on Army and naval aircraft contracts, respectively, and the net loss of $2,000 and the deficiency in profit of $1,000 sustained in 1940 on naval and Army aircraft contracts, respectively.

[T.D. 4909, 4 FR 2733, July 1, 1939, as amended by T.D. 6511, 25 FR 12442, Dec. 6, 1960]

§ 16.10 *Credit for Federal income taxes.* For the purpose of computing the amount of excess profit to be paid to the United States, a credit is allowable against the excess profit for the amount of Federal income taxes paid or remaining to be paid on the amount of such excess profit. The ''Federal income taxes'' in respect of which this credit is allowable include the income taxes imposed by Titles I and IA of the Revenue Act of 1938, and Chapter 1 and Subchapter A of Chapter 2 of the Internal Revenue Code, and the excess-profits taxes imposed by section 602 of the Revenue Act of 1938 and Subchapter B of Chapter 2 of the Internal Revenue Code. This credit is allowable for these taxes only to the extent that it is affirmatively shown that they have been finally determined and paid or remain to be paid and that they were imposed upon the excess profit against which the credit is to be made. In case such a credit has been allowed and the amount of Federal income taxes imposed upon the excess profit is redetermined, the credit previously allowed shall be adjusted accordingly.

§ 16.11 *Failure of contractor to require agreement by subcontractor.* (a) Every contract or subcontract coming within the scope of the act and the regulations in this part is required by the act to contain, among other things, an agreement by the contracting party to make no subcontract unless the subcontractor agrees:

(1) To make a report, as described in the act, under oath to the Secretary of War upon the completion of the subcontract;

(2) To pay into the Treasury excess profit, as determined by the Treasury Department, in the manner and amounts specified in the act;

(3) To make no subdivision of the subcontract for the same article or articles for the purpose of evading the provisions of the act;

(4) That the manufacturing spaces and books of its own plant, affiliates, and subdivisions shall at all times be subject to inspection and audit as provided in the act.

(b) If a contracting party enters into a subcontract with a subcontractor who fails to make such agreement, such contracting party shall, in addition to its liability for excess profit determined on contracts or subcontracts performed by it, be liable for any excess profit determined to be due the United States on the subcontract entered into with such subcontractor. In such event, however, the excess profit to be paid to the United States in respect of the subcontract entered into with such subcontractor shall be determined separately from any contracts or subcontracts performed by the contracting party entering into the subcontract with such subcontractor.

§ 16.12 *Evasion of excess profit.* Section 3 of the act of March 27, 1934, as amended, provides that the contracting party shall agree to make no subdivisions of any contract or subcontract for the same article or articles for the purpose of evading the provisions of the act. If any such subdivision or subcontract is made it shall constitute a violation of the agreement provided for in the act, and the cost of completing a contract or subcontract by a contracting party which violates such agreement shall be determined in a manner necessary clearly to reflect the true excess profit of such contracting party.

§ 16.13 *Books of account and records.* (a) It is recognized that no uniform method of accounting can be prescribed for all contracting parties subject to the provisions of the act. Each contracting party is required by law to make a report of its true profits and excess profit. Such party must, therefore, maintain such accounting records as will enable it to do so. See § 16.8. Among the essentials are the following:

(1) The profit or loss upon a particular contract or subcontract shall be accounted for and fully explained in the books of account separately on each contract or subcontract.

(2) Any cost accounting methods, however standard they may be and regardless of long continued practice, shall be controlled by, and be in accord with, the objectives and purposes of the act and of any regulations prescribed thereunder.

(3) The accounts shall clearly disclose the nature and amount of the different items of cost of performing a contract or subcontract.

(b) In cases where it has been the custom priorly to use so-called ''normal'' rates of overhead expense or administrative expenses, or ''standard'' or ''normal'' prices of material or labor charges, no objection will be made to the use temporarily during the period of performing the contract or subcontract of such methods in charging the contract or subcontract, if the method of accounting employed is such as clearly to reflect, in the final determination upon the books of account, the actual profit derived from the performance of the contract or subcontract and if the necessary adjusting entries are entered upon the books and they explain in full detail the revisions necessary to accord with the facts. As to the elements of cost, see § 16.8.

(c) All books, records, and original evidences of costs (including, among other things, production orders, bills or schedules of materials, purchase requisitions, purchase orders, vouchers, requisitions for materials, standing expense orders, inventories, labor time cards, pay rolls, cost distribution sheets) pertinent to the determination of the true profit, excess profit, deficiency in profit or net loss from the performance of a contract or subcontract shall be kept at all times available for inspection by internal-revenue officers, and shall be carefully preserved and retained so long as the contents thereof may become material in the administration of the act. This provision is not confined to books, records, and original evidences pertaining to items which may be considered to be a part of the cost of performing a contract or subcontract. It is applicable to all books, records, and original evidences of costs of each plant, branch or department involved in the performance of a contract or subcontract or in the allocation or distribution of costs to the contract or subcontract.

§ 16.14 *Report to Secretary of the Army.* (a) Upon the completion of a contract or subcontract coming within the scope of the act and the regulations in this part, the contracting party is required to make a report, under oath, to the Secretary of the Army. As to the date of completion of a contract or subcontract, see § 16.4. Such report shall be in the form prescribed by the Secretary of the Army and shall state the total contract price, the cost of performing the contract, the net income from such contract, and the per centum such income bears to the contract price. The contracting party shall also include as a part of such report a statement showing:

(1) The manner in which the indirect costs were determined and allocated to the cost of

performing the contract or subcontract (see § 16.8);

(2) The name and address of every subcontractor with whom a subcontract was made, the object of such subcontract, the date when completed and the amount thereof; and

(3) The name and address of each affiliate or other organization, trade or business owned or controlled directly or indirectly by the same interests as those who so own or control the contracting party, together with a statement showing in detail all transactions which were made with such affiliate or other organization, trade or business and are pertinent to the determination of the excess profit.

(b) A copy of the report required to be made to the Secretary of the Army is required to be transmitted by the contracting party to the Secretary of the Treasury. Such copy shall not be transmitted directly to the Secretary of the Treasury but shall be filed as a part of the annual report. See § 16.15.

§ 16.15 *Annual reports for income-taxable years*—(a) *General requirements.* Every contracting party completing a contract or subcontract within the contracting party's income-taxable year ending after April 3, 1939 shall file with the district director of internal revenue for the internal revenue district in which the contracting party's Federal income tax returns are required to be filed an annual report on the prescribed form of the profit and excess profit on all contracts and subcontracts coming within the scope of the act and the regulations in this part and completed within the particular income-taxable year. There shall be included as a part of such a report a statement, preferably in columnar form, showing separately for each such contract or subcontract completed by the contracting party within the income-taxable year the total contract price, the cost of performing the contract or subcontract and the resulting profit or loss on each contract or subcontract together with a summary statement showing in detail the computation of the net profit or net loss upon all contracts and subcontracts completed within the income-taxable year and the amount of the excess profit, if any, for the income-taxable year covered by the report. A copy of the report made to the Secretary of the Army (see § 16.14) with respect to each contract or subcontract covered in the annual report, shall be filed as a part of such annual report. In case the income-taxable year of the contracting party is a period of less than twelve months (see § 16.1), the report required by this section shall be made for such period and not for a full year.

(b) *Time for filing annual reports.* Annual reports of contracts and subcontracts coming within the scope of the act and the regulations in this part completed by a contracting party within an income-taxable year must be filed on or before the 15th day of the ninth month following the close of the contracting party's income-taxable year. It is important that the contracting party render on or before the due date an annual report as nearly complete and final as it is possible for the contracting party to prepare. An extension of time granted the contracting party for filing its Federal income tax return does not serve to extend the time for filing the annual report required by this section. Authority consistent with authorizations for granting extensions of time for filing Federal income tax returns is hereby delegated to the various collectors of internal revenue for granting extensions of time for filing the reports required by this section. Application for extensions of time for filing such reports should be addressed to the district director of internal revenue for the district in which the contracting party files its Federal income tax returns and must contain a full recital of the causes for the delay.

§ 16.16 *Payment of excess profit liability.* The amount of the excess profit liability to be paid to the United States shall be paid on or before the due date for filing the report with the district director of internal revenue. See § 16.15. At the option of the contracting party, the amount of the excess profit liability may be paid in four equal installments instead of in a single payment, in which case the first installment is to be paid on or before the date prescribed for the payment of the excess profit as a single payment, the second installment on or before the 15th day of the third month, the third installment on or before the 15th day of the sixth month, and the fourth installment on or before the 15th day of the ninth month, after such date.

§ 16.17 *Liability of surety.* The surety under contracts entered into with the Secretary of the Army for the construction or manufacture of any complete aircraft or any portion thereof for the Army shall not be liable for payment of excess profit due the United States in respect of such contracts.

§ 16.18 *Determination of liability for excess profit, interest and penalties; assessment, collection, payment, refunds.* (a) The duty of determining the correct amount of excess profit liability on contracts and subcontracts coming within the scope of the act and the regulations in this part is upon the Commissioner of Internal Revenue. Under section 3(b) of the act of March 27, 1934, as last amended, all provisions of law (including the provisions of law relating to interest, penalties and refunds) applicable with respect to the taxes imposed by Title I of the Revenue Act of 1934 and not inconsistent with section 3 of the act of March 27, 1934, as last amended, are applicable with respect to the assessment, collection, or payment of excess profits on contracts and subcontracts coming within the

scope of the act and the regulations in this part and to refunds of overpayments of profits into the Treasury under the act. Claims by a contracting party for the refund of an amount of excess profit, interest, penalties, and additions to such excess profit shall conform to the general requirements prescribed with respect to claims for refund of overpayments of taxes imposed by Title I of the Revenue Act of 1934 and, if filed on account of any additional costs incurred pursuant to guarantee provisions in a contract, shall be supplemented by a statement under oath showing the amount and nature of such costs and all facts pertinent thereto.

(b) Administrative procedure for the determination, assessment and collection of excess profit liability under the act and the regulations in this part and the examination of reports and claims in connection therewith will be prescribed from time to time by the Commissioner of Internal Revenue.

PART 17—EXCESS PROFITS ON NAVY CONTRACTS

REGULATIONS FOR INCOME-TAXABLE YEARS ENDING AFTER APRIL 3, 1939

AUTHORITY: Sections 17.1 to 17.19 issued under 52 Stat. 467; 26 U.S.C. 3791. Interpret or apply sec. 3, 48 Stat. 505, as amended, 53 Stat. 112; 34 U.S.C. 496, 26 U.S.C. 650, 651.

SOURCE: Sections 17.1 to 17.19 contained in T.D. 4906, 4 FR 2492, June 27, 1939, except as otherwise noted.

§ 17.1 *Definitions.* As used in the regulations in this part the term:

(a) *Act* means the act of March 27, 1934 (48 Stat. 505; 34 U.S.C. 496), as originally enacted, as amended by the act of June 25, 1936 (49 Stat. 1926; 34 U.S.C. 496), and as further amended by the act of April 3, 1939 (53 Stat. 560; 34 U.S.C. 496).

(b) *Person* includes an individual, a corporation, a partnership, a trust or estate, a joint-stock company, an association, or a syndicate, group, pool, joint venture or other unincorporated organization or group, through or by means of which any business, financial operation or venture is carried on.

(c) *Contract* means an agreement made by authority of the Secretary of the Navy for the construction or manufacture of any complete naval vessel or aircraft or any portion thereof.

(d) *Contractor* means a person entering into a direct contract with the Secretary of the Navy or his duly authorized representative.

(e) *Subcontract* means an agreement entered into by one person with another person for the construction or manufacture of a complete naval vessel or aircraft or any portion thereof, the prime contract for such vessel or aircraft or portion thereof having been entered into between a contractor and the Secretary of the Navy or his duly authorized representative.

(f) *Subcontractor* means any person other than a contractor entering into a subcontract.

(g) *Contracting party* means a contractor or subcontractor as the case may be.

(h) *Contract price* or *contract price* means the amount or total amount to be received under a contract or subcontract as the case may be.

(i) *Income-taxable year* means the calendar year, the fiscal year ending during such calendar year or the fractional part of such calendar or fiscal year, upon the basis of which the contracting party's net income is computed and for which its income tax returns are made for Federal income tax purposes.

§ 17.2 *Scope of this part.* The regulations in this part deal with liability for excess profit on contracts and subcontracts for the construction or manufacture of any complete naval vessel or aircraft or any portion thereof completed within income-taxable years ending after April 3, 1939. As to the date of the completion of a contract or subcontract, see § 17.5.

§ 17.3 *Contracts and subcontracts under which excess profit liability may be incurred.* Except as otherwise provided with respect to contracts or subcontracts for certain scientific equipment (see § 17.4), every contract awarded for an amount exceeding $10,000 and entered into after the enactment of the act of March 27, 1934 for the construction or manufacture of any complete naval vessel or aircraft, or any portion thereof, is subject to the provisions of the act relating to excess profit liability. Any subcontract made with respect to such a contract and involving an amount in excess of $10,000 is also within the scope of the act. If a contracting party places orders with another party, aggregating an amount in excess of $10,000, for articles or materials which constitute a part of the cost of performing the contract or subcontract, the placing of such orders shall constitute a subcontract within the scope of the act, unless it is clearly shown that each of the orders involving $10,000 or less is a bona fide separate and distinct subcontract and not a subdivision made for the purpose of evading the provisions of the act.

§ 17.4 *Contracts or subcontracts for scientific equipment.* No excess profit liability is incurred upon a contract or subcontract entered into after the amendment of section 3(b) of the act of June 25, 1936, if at the time or prior to the time such contract or subcontract is made it is designated by the Secretary of the Navy as being exempt under the provisions of the act pertaining to scientific equipment used for communication, target detection, navigation, or fire control. The exemption of contracts or subcontracts

for scientific equipment does not extend to any contract or subcontract entered into prior to the enactment of such amendment of section 3(b) of the act.

§ 17.5 *Completion of contract defined.* The date of delivery of the vessel, aircraft or portion thereof covered by the contract or subcontract shall be considered the date of completion of the contract or subcontract unless otherwise determined jointly by the Secretary of the Navy and the Secretary of the Treasury or their duly authorized representatives. Except as otherwise provided in the preceding sentence, the replacement of defective parts of delivered articles or the performance of other guarantee work in respect to such articles will not operate to extend the date of completion. As to the treatment of the cost of such work as a cost of performing a contract or subcontract, see § 17.9(h). As to a refund in case of adjustment due to any subsequently incurred additional costs, see § 17.19. If a contract or subcontract is at any time cancelled or terminated, it is completed at the time of the cancellation or termination.

§ 17.6 *Manner of determining liability with respect to contracts or subcontracts for complete naval vessles or portions thereof.* If in an income-taxable year ending after April 3, 1939 a contracting party completes one or more contracts or subcontracts coming within the scope of the act and entered into for the construction or manufacture of any complete naval vessel or any portion thereof, the amount of excess profit to be paid to the United States with respect to all such contracts and subcontracts completed within the income-taxable year shall be computed as follows:

(a) The first step is to ascertain the total contract prices of all such contracts and subcontracts completed by the contracting party within the income-taxable year. As to total contract prices, see §§ 17.1 and 17.8.

(b) The second step is to ascertain the cost of performing such contracts and subcontracts (see § 17.9) and to deduct such cost from the total contract prices of such contracts and subcontracts as computed in the first step.

The amount remaining after such subtraction is the amount of net profit or net loss upon such contracts and subcontracts completed within the income-taxable year.

(c) The third step, in case there is a new profit upon such contracts and subcontracts, is to subtract from the amount of such net profit as computed in the second step the sum of:

(1) An amount equal to 10 percent of the total contract prices of such contracts and subcontracts completed within the income-taxable year; and

(2) The amount of any net loss which was sustained in the preceding income-taxable year with respect to contracts or subcontracts entered into for the construction or manufacture of any complete naval vessel or any portion thereof, and which is allowable as a credit in determining the excess profit for the income-taxable year with respect to contracts and subcontracts entered into for the construction or manufacture of any complete naval vessel or any portion thereof (see § 17.10(a)).

The amount remaining after such subtraction is the amount of excess profit for the income-taxable year with respect to contracts and subcontracts entered into for the construction or manufacture of any complete naval vessel or any portion thereof.

(d) The fourth step is to ascertain the amount of credit allowed for Federal income taxes paid or remaining to be paid upon the amount of such excess profit as computed in the third step (see § 17.11) and then subtract from the amount of such excess profit the amount of credit for Federal income taxes. The amount remaining after this subtraction is the amount of excess profit to be paid to the United States by the contracting party for the income-taxable year with respect to contracts and subcontracts entered into for the construction or manufacture of any complete naval vessel or any portion thereof and completed within the income- taxable year.

(e) The application of the provisions of this section of the regulations may be illustrated by the following example:

Example: On September 1, 1939 the A Corporation, which keeps its books and makes its Federal income tax returns on a calendar year basis, entered into a contract with the Secretary of the Navy for the construction of portions of a naval vessel coming within the scope of the act, the total contract price of which $200,000. On March 10, 1940 the A Corporation entered into another such contract, the total contract price of which was $40,000. Both contracts were completed within the calendar year 1940, the first at a cost of $155,000 and the second at a cost of $45,000. During the year 1940 the A Corporation also completed at a loss of $10,000 two contracts entered into for the construction or manufacture of naval aircraft coming within the scope of the act. For the year 1939 the A Corporation sustained a net loss of $2,500 on all contracts and subcontracts for any complete naval vessel or any portion thereof coming within the scope of the act and completed within the calendar year 1939. For the year 1939 the A Corporation also sustained a net loss of $1,800 on all other contracts and subcontracts coming within the scope of the act which were completed within the calendar year 1939. For purposes of Federal income tax, the net income of the A Corporation for the year 1940 amounted to $96,000, which amount included the net profit of $40,000

upon the contracts entered into on September 1, 1939 and March 10, 1940. For the year 1940 the A Corporation paid Federal income taxes amounting to $19,200. The excess profit liability of the A Corporation for 1940 is payable with respect to the contracts for portions of a naval vessel which were completed in 1940. The loss of $10,000 on other contracts completed in 1940 and the net loss of $1,800 for 1939 on contracts and subcontracts for naval aircraft do not enter into the computation of such liability. Accordingly, the excess profit liability of the A Corporation for 1940 is $10,800 computed as follows:

Total contract prices:		
Contract No. 1	$200,000	
Contract No. 2	40,000	
		$240,000
Less cost of performing contracts:		
Contract No. 1	155,000	
Contract No. 2	45,000	
		200,000
Net profit on contracts		40,000
Less:		
10 percent of total contract prices (10 percent of $240,000)	24,000	
Net loss from 1939	2,500	
		26,500
Excess profit for year 1940		13,500
Less credit for Federal income taxes (Federal income tax on $13,500 at rates for 1940)		2,700
Amount of excess profit payable to the United States		10,800

§ 17.7 *Manner of determining liability with respect to contracts or subcontracts for complete naval aircraft or portions thereof.* If in an income-taxable year ending after April 3, 1939 a contracting party completes one or more contracts or subcontracts coming within the scope of the act and entered into for the construction or manufacture of any complete naval aircraft or any portion thereof, the amount of excess profit to be paid to the United States with respect to all such contracts and subcontracts completed within the income-taxable year shall be computed as follows:

(a) The first step is to ascertain the total contract prices of all such contracts and subcontracts completed by the contracting party within the income-taxable year. As to total contract prices, see §§ 17.1 and 17.8.

(b) The second step is to ascertain the cost of performing such contracts and subcontracts (see § 17.9) and to deduct such cost from the total contract prices of such contracts and subcontracts as computed in the first step. The amount remaining after such subtraction is the amount of net profit or net loss upon such contracts and subcontracts completed within the income-taxable year.

(c) The third step, in case there is a net profit upon such contracts and subcontracts, is to subtract from the amount of such net profit as computed in the second step the sum of:

(1) An amount equal to 12 percent of the total contract prices of such contracts and subcontracts completed within the income-taxable year;

(2) The amount of any net loss which was sustained in the same or a prior income- taxable year with respect to contracts or subcontracts for the construction or manufacture of any complete aircraft or any portion thereof, and which is allowable as a credit in determining the excess profit for the income-taxable year with respect to contracts and subcontracts entered into for the construction or manufacture of complete aircraft or any portion thereof (see § 17.10(b)); and

(3) The amount of any deficiency in profit which was sustained in the same or a prior income-taxable year with respect to contracts or subcontracts for the construction or manufacture of any complete aircraft or any portion thereof, and which is allowable as a credit in determining the excess profit for the income-taxable year with respect to contracts and subcontracts entered into for the construction or manufacture of complete aircraft or any portion thereof (see § 17.10(c)).

The amount remaining after such subtraction is the amount of excess profit for the income-taxable year with respect to contracts and subcontracts entered into for the construction or manufacture of complete naval aircraft or any portion thereof.

(d) The fourth step is to ascertain the amount of credit allowed for Federal income taxes paid or remaining to be paid upon the amount of such excess profit as computed in the third step (see § 17.11) and then subtract from the amount of such excess profit the amount of credit for Federal income taxes. The amount remaining after this subtraction is the amount of excess profit to be paid to the United States by the contracting party for the income-taxable year with respect to contracts and subcontracts entered into for the construction or manufacture of complete naval aircraft or any portion thereof and completed within the income-taxable year.

(e) The application of the provisions of this section of the regulations may be illustrated by the following example:

Example. On September 1, 1939, the B Corporation, which keeps its books and makes its Federal income tax returns on a calendar year basis, entered into a contract with the Secretary of the Navy for the construction of naval aircraft coming within the scope of the act, the total contract price of which was

$200,000. On March 10, 1940, the B Corporation entered into another such contract, the total contract price of which was $40,000. Both contracts were completed within the calendar year 1940, the first at a cost of $155,000 and the second at a cost of $45,000. During the year 1940, the B Corporation also completed at a deficiency in profit of $2,000 a contract entered into for the construction of Army aircraft coming within the scope of the act. During the year 1940, the B Corporation also completed at a loss of $10,000 two contracts entered into for the construction or manufacture of portions of a naval vessel coming within the scope of the act. For the year 1939, the B Corporation sustained a net loss of $2,500 and a deficiency in profit of $1,000 on all contracts and subcontracts for naval aircraft coming within the scope of the act and completed within the calendar year 1939. For the year 1939, the B Corporation also sustained a net loss of $1,800 on a contract for the construction of Army aircraft coming within the scope of the act which was completed within the calendar year 1939. For the purposes of the Federal income tax, the net income of the B Corporation for the year 1940, on which the tax was paid, amounted to $96,000, which included the net profit of $40,000 upon the contracts entered into on September 1, 1939, and March 10, 1940. The excess profit liability of the B Corporation for 1940 is payable with respect to the contracts for naval aircraft which were completed in 1940. The loss of $10,000 on the contracts for portions of a naval vessel completed in 1940 does not enter into the computation of such liability. Accordingly, the excess profit liability of the B Corporation for 1940 is $2,964 computed as follows:

Total contract prices:		
Contract No. 1	$200,000	
Contract No. 2	40,000	
		$240,000
Less: Cost of performing contracts:		
Contract No. 1	155,000	
Contract No. 2	45,000	
		200,000
Net profit on contracts		40,000
Less:		
12 percent of total contract prices (12 percent of $240,000)	28,800	
Deficiency in profit (in Army aircraft contracts) in 1940	2,000	
Net loss (in naval aircraft contracts) from 1939	2,500	
Net loss (in Army aircraft contracts) from 1939	1,800	
Deficiency in profit (in naval aircraft contracts) from 1939	1,000	
		36,100
Excess profit for year 1940		3,900
Less: Credit for Federal income taxes (Federal income tax on $3,900 at rates for 1940)		936
Amount of excess profit payable to the United States		2,964

[T.D. 4906, 4 FR 2492, June 27, 1939, as amended by T.D. 6512, 25 FR 12443, Dec. 6, 1960]

§ 17.8 *Total contract price.* The total contract price of a particular contract or subcontract (see § 17.1) may be received in money or its equivalent. If something other than money is received, only the fair market value of the thing received, at the date of receipt, is to be included in determining the amount received. Bonuses earned for bettering performance and penalties incurred for failure to meet the contract guarantees are to be regarded as adjustments of the original contract price. Trade or other discounts granted by a contracting party in respect of a contract or subcontract performed by such party are also to be deducted in determining the true total contract price of such contract or subcontract.

§ 17.9 *Cost of performing a contract or subcontract*—(a) *General rule.* The cost of performing a particular contract or subcontract shall be the sum of (1) the direct costs, including therein expenditures for materials, direct labor and direct expenses, incurred by the contracting party in performing the contract or subcontract; and (2) the proper proportion of any indirect costs (including therein a reasonable proportion of management expenses) incident to and necessary for the performance of the contract or subcontract.

(b) *Elements of cost.* No definitions of the elements of cost may be stated which are of invariable application to all contractors and subcontractors. In general, the elements of cost may be defined for purposes of the act as follows:

(1) Manufacturing cost, which is the sum of factory cost (see paragraph (c) of this section) and other manufacturing cost (see paragraph (d) of this section);

(2) Miscellaneous direct expenses (see paragraph (e) of this section);

(3) General expenses, which are the sum of indirect engineering expenses, usually termed ''engineering overhead'' (see paragraph (f) of this section) and expenses of distribution, servicing and administration (see paragraph (g) of this section); and

(4) Guarantee expenses (see paragraph (h) of this section).

(c) *Factory cost.* Factory cost is the sum of the following:

(1) *Direct materials.* Materials, such as those purchased for stock and subsequently issued

for contract operations and those acquired under subcontracts, which become a component part of the finished product or which are used directly in fabricating, converting or processing such materials or parts.

(2) *Direct productive labor.* Productive labor, usually termed ''shop labor,'' which is performed on and is properly chargeable directly to the article manufactured or constructed pursuant to the contract or subcontract, but which ordinarily does not include direct engineering labor (see subparagraph (3) of this paragraph).

(3) *Direct engineering labor.* The compensation of professional engineers and other technicists (including reasonable advisory fees), and of draftsmen, properly chargeable directly to the cost of the contract or subcontract.

(4) *Miscellaneous direct factory charges.* Items which are properly chargeable directly to the factory cost of performing the contract or subcontract but which do not come within the classifications in subparagraphs (1), (2), and (3) of this paragraph, as for example, royalties which the contracting party pays to another party and which are properly chargeable to the cost of performing the contract or subcontract (but see paragraph (d) of this section).

(5) *Indirect factory expenses.* Items, usually termed ''factory overhead,'' which are not directly chargeable to the factory cost of performing the contract or subcontract but which are properly incident to and necessary for the performance of the contract or subcontract and consist of the following:

(i) *Labor.* Amounts expended for factory labor, such as supervision and inspection, clerical labor, timekeeping, packing and shipping, stores supply, services of tool crib attendants, and services in the factory employment bureau, which are not chargeable directly to productive labor of the contract or subcontract.

(ii) *Materials and supplies.* The cost of materials and supplies for general use in the factory in current operations, such as shop fuel, lubricants, heat-treating, plating, cleaning and anodizing supplies, nondurable tools and gauges, stationery (such as time tickets and other forms), and boxing and wrapping materials.

(iii) *Service expenses.* Factory expenses of a general nature, such as those for power, heat and light (whether purchased or produced), ventilation and air conditioning and operation and maintenance of general plant assets and facilities.

(iv) *Fixed charges and obsolescence.* Recurring charges with respect to property used for manufacturing purposes of the contract or subcontract, such as premiums for fire and elevator insurance, property taxes, rentals and allowances for depreciation of such property, including maintenance and depreciation of reasonable standby equipment; and depreciation and obsolescence of special equipment and facilities necessarily acquired primarily for the performance of the contract or subcontract. In making allowances for depreciation, consideration shall be given to the number and length of shifts.

(v) *Miscellaneous indirect factory expenses.* Miscellaneous factory expenses not directly chargeable to the factory cost of performing the contract or subcontract, such as purchasing expenses; ordinary and necessary expenses of rearranging facilities within a department or plant; employees' welfare expenses; premiums or dues on compensation insurance; employers' payments to unemployment, old age and social security, Federal and State funds not including payments deducted from or chargeable to employees or officers; pensions and retirement payments to factory employees; factory accident compensation (as to self-insurance, see paragraph (g) of this section); but not including any amounts which are not incident to services, operations, plant, equipment or facilities involved in the performance of the contract or subcontract.

(d) *Other manufacturing cost.* Other manufacturing cost as used in paragraph (b) of this section includes items of manufacturing costs which are not properly or satisfactorily chargeable to factory costs (see paragraph (c) of this section) but which upon a complete showing of all pertinent facts are properly to be included as a cost of performing the contract or subcontract, as for instance, payments of royalties and amortization of the cost of designs purchased and patent rights over their useful life; and ''deferred'' or ''unliquidated'' experimental and development charges. For example, in case experimental and development costs have been properly deferred or capitalized and are amortized in accordance with a reasonably consistent plan, a proper portion of the current charge, determined by a ratable allocation which is reasonable in consideration of the pertinent facts, may be treated as a cost of performing the contract or subcontract. In the case of general experimental and development expenses which may be charged off currently, a reasonable portion thereof may be allocated to the cost of performing the contract or subcontract. If a special experimental or development project is carried on in pursuance of a contract, or in anticipation of a contract which is later entered into, and the expense is not treated as a part of general experimental and development expenses or is not otherwise allowed as a cost of performing the contract, there clearly appearing no reasonable prospect of an additional contract for the type of article involved, the entire cost of such project may be allowed as a part of the cost of performing the contract.

(e) *Miscellaneous direct expenses.* Miscellaneous direct expenses as used in paragraph (b) of this section include:

(1) *Cost of installation and construction.* Cost of installation and construction includes the cost of materials, labor and expenses necessary for the erection and installation prior to the completion of the contract and after the delivery of the product or material manufactured or constructed pursuant to the contract or subcontract.

(2) *Sundry direct expenses.* Items of expense which are properly chargeable directly to the cost of performing a contract or subcontract and which do not constitute guarantee expenses (see paragraph (h) of this section) or direct costs classified as factory cost or other manufacturing cost (see paragraphs (c) and (d) of this section), such as premiums on performance or other bonds required under the contract or subcontract; State sales taxes imposed on the contracting party; freight on outgoing shipments; fees paid for wind tunnel and model basin tests; demonstration and test expenses; crash insurance premiums; traveling expenses. In order for any such item to be allowed as a charge directly to the cost of performing a contract or subcontract, (i) a detailed record shall be kept by the contracting party of all items of a similar character, and (ii) no item of a similar character which is properly a direct charge to other work shall be allowed as a part of any indirect expenses in determining the proper proportion thereof chargeable to the cost of performing the contract or subcontract. As to allowable indirect expenses, see paragraphs (c)(5), (f), (g), and (j) of this section.

(f) *Indirect engineering expenses.* Indirect engineering expenses, usually termed ''engineering overhead,'' which are treated in this section as a part of general expenses in determining the cost of performing a contract or subcontract (see paragraph (b) of this section), comprise the general engineering expenses which are incident to and necessary for the performance of the contract or subcontract, such as the following:

(1) *Labor.* Reasonable fees of engineers employed in a general consulting capacity, and compensation of employees for personal services to the engineering department, such as supervision, which is properly chargeable to the contract or subcontract, but which is not chargeable as direct engineering labor (see paragraph (c)(3) of this section).

(2) *Material.* Supplies for the engineering department, such as paper and ink for drafting and similar supplies.

(3) *Miscellaneous expenses.* Expenses of the engineering department, such as (i) maintenance and repair of engineering equipment, and (ii) services purchased outside of the engineering department for blue- printing, drawing, computing, and like purposes.

(g) *Expenses of distribution, servicing and administration.* Expenses of distribution, servicing and administration, which are treated in this section as a part of general expenses in determining the cost of performing a contract or subcontract (see paragraph (b) of this section), comprehend the expenses incident to and necessary for the performance of the contract or subcontract, which are incurred in connection with the distribution and general servicing of the contracting party's products and the general administration of the business, such as:

(1) *Compensation for personal services of employees.* The salaries of the corporate and general executive officers and the salaries and wages of administrative clerical employees and of the office services employees such as telephone operators, janitors, cleaners, watchmen and office equipment repairmen.

(2) *Bidding and general selling expenses.* Bidding and general selling expenses which by reference to all the pertinent facts and circumstances reasonably constitute a part of the cost of performing a contract or subcontract. The treatment of bidding and general selling expenses as a part of general expenses in accordance with this paragraph is in lieu of any direct charges which otherwise might be made for such expenses. The term ''bidding expenses'' as used in this section includes all expenses in connection with preparing and submitting bids.

(3) *General servicing expenses.* Expenses which by reference to all the pertinent facts and circumstances reasonably constitute a part of the cost of performing a contract or subcontract and which are incident to delivered or installed articles and are due to ordinary adjustments or minor defects; but including no items which are treated as a part of guarantee expenses (see paragraph (h) of this section) or as a part of direct costs, such as direct materials, direct labor, and other direct expense.

(4) *Other expenses.* Miscellaneous office and administrative expenses, such as stationery and office supplies; postage; repair and depreciation of office equipment; contributions to local charitable or community organizations to the extent constituting ordinary and necessary business expenses; employees' welfare expenses; premiums and dues on compensation insurance; employers' payments to unemployment, old age and social security Federal and State funds not including payments deducted from or chargeable to employees or officers; pensions and retirement payments to administrative office employees and accident compensation to office employees (as to self-insurance, see subdivision (i) of this subparagraph).

(i) Subject to the exception stated in this subdivision, in cases where a contracting party assumes its own insurable risks (usually termed ''self-insurance''), losses and payments will be allowed in the cost of performing a contract or subcontract only to the extent of the actual losses suffered or payments incurred during, and in the course

of, the performance of the contract or subcontract and properly chargeable to such contract or subcontract. If, however, a contracting party assumes its own insurable risks (*a*) for compensation paid to employees for injuries received in the performance of their duties, or (*b*) for unemployment risks in States where insurance is required, there may be allowed as a part of the cost of performing a contract or subcontract a reasonable portion of the charges set up for purposes of self-insurance under a system of accounting regularly employed by the contracting party, as determined by the Commissioner of Internal Revenue, at rates not exceeding the lawful or approved rates of insurance companies for such insurance, reduced by amounts representing the acquisition cost in such companies, provided the contracting party adopts and consistently follows this method with respect to self-insurance in connection with all contracts and subcontracts subsequently performed by him.

(ii) Allowances for interest on invested capital are not allowable as costs of performing a contract or subcontract.

(iii) Among the items which shall not be included as a part of the cost of performing a contract or subcontract or considered in determining such cost, are the following: Entertainment expenses; dues and memberships other than of regular trade associations; donations except as otherwise provided above; losses on other contracts; profits or losses from sales or exchanges of capital assets; extraordinary expenses due to strikes or lockouts; fines and penalties; amortization of unrealized appreciation of values of assets; expenses, maintenance and depreciation of excess facilities (including idle land and building, idle parts of a building, and excess machinery and equipment) vacated or abandoned, or not adaptable for future use in performing contracts or subcontracts; increases in reserve accounts for contingencies, repairs, compensation insurance (except as above provided with respect to self-insurance) and guarantee work; Federal and State income and excess-profits taxes and surtaxes; cash discount earned up to one percent of the amount of the purchase, except that all discounts on subcontracts subject to the act will be considered; interest incurred or earned; bond discount or finance charges; premiums for life insurance on the lives of officers; legal and accounting fees in connection with reorganizations, security issues, capital stock issues and the prosecution of claims against the United States (including income tax matters); taxes and expenses on issues and transfers of capital stock; losses on investments; bad debts; and expenses of collection and exchange.

(iv) In order that the cost of performing a contract or subcontract may be accounted for clearly, the amount of any excess profits repayable to the United States pursuant to the act should not be charged to or included in such cost.

(h) *Guarantee expenses.* Guarantee expenses include the various items of factory, cost, other manufacturing cost, cost of installation and construction, indirect engineering expenses and other general expenses (see paragraphs (c) to (g) of this section) which are incurred after delivery or installation of the article manufactured or constructed pursuant to the particular contract or subcontract and which are incident to the correction of defects or deficiencies which the contracting party is required to make under the guarantee provisions of the particular contract or subcontract. If the total amount of such guarantee expenses is not ascertainable at the time of filing the report required to be filed with the district director of internal revenue (see § 17.16) and the contracting party includes any estimated amount of such expenses as part of the claimed total cost of performing the contract or subcontract, such estimated amount shall be separately shown on the report and the reasons for claiming such estimated amount shall accompany the report; but only the amount of guarantee expenses actually incurred will be allowed. If the amount of guarantee expenses actually incurred is greater than the amount (if any) claimed on the report and the contracting party has made an overpayment of excess profit, a refund of the overpayment shall be made, in accordance with the provisions of § 17.19. If the amount of guarantee expenses actually incurred is less than the amount claimed on the report and an additional amount of excess profit is determined to be due, the additional amount of excess profit shall be assessed and paid in accordance with the provisions of § 17.19.

(i) *Unreasonable compensation.* (1) The salaries and compensation for services which are treated as a part of the cost of performing a contract or subcontract include reasonable payments for salaries, bonuses, or other compensation for services. As a general rule, bonuses paid to employees (and not to officers) in pursuance of a regularly established incentive bonus system may be allowed as a part of the cost of performing a contract or subcontract.

(2) The test of allowability is whether the aggregate compensation paid to each individual is for services actually rendered incident to, and necessary for, the performance of the contract or subcontract, and is reasonable. Excessive or unreasonable payments whether in cash, stock or other property ostensibly as compensation for services shall not be included in the cost of performing a contract or subcontract.

(j) *Allocation of indirect costs.* No general rule applicable to all cases may be stated for ascertaining the proper proportion of the indirect costs to be allocated to the cost of

performing a particular contract or subcontract. Such proper proportion depends upon all the facts and circumstances relating to the performance of the particular contract or subcontract. Subject to a requirement that all items which have no relation to the performance of the contract or subcontract shall be eliminated from the amount to be allocated, the following methods of allocation are outlined as acceptable in a majority of cases:

(1) *Factory indirect expenses.* The allowable indirect factory expenses (see paragraph (c)(5) of this section) shall ordinarily be allocated or ''distributed'' to the cost of the contract or subcontract on the basis of the proportion which the direct productive labor (see paragraph (c)(2) of this section) attributable to the contract or subcontract bears to the total direct productive labor of the production department or particular section thereof during the period within which the contract or subcontract is performed, except that if the indirect factory expenses are incurred in different amounts and in different proportions by the various producing departments consideration shall be given to such circumstances to the extent necessary to make a fair and reasonable determination of the true profit and excess profit.

(2) *Engineering indirect expenses.* The allowable indirect engineering expenses (see paragraph (f) of this section) shall ordinarily be allocated or ''distributed'' to the cost of the contract or subcontract on the basis of the proportion which the direct engineering labor attributable to the contract or subcontract (see paragraph (c)(3) of this section) bears to the total direct engineering labor of the engineering department or particular section thereof during the period within which the contract or subcontract is performed. If the expenses of the engineering department are not sufficient in amount to require the maintenance of separate accounts, the engineering indirect costs may be included in the indirect factory expenses (see paragraph (c)(5) of this section) and allocated or distributed to the cost of performing the contract or subcontract as a part of such expenses, provided the proportion so allocated or distributed is proper under the facts and circumstances relating to the performance of the particular contract or subcontract.

(3) *Administrative expenses (or ''overhead'').* The allowable expenses of administration (see paragraph (g) of this section) or other general expenses except indirect engineering expenses, bidding and general selling expenses, and general servicing expenses shall ordinarily be allocated or distributed to the cost of performing a contract or subcontract on the basis of the proportion which the sum of the manufacturing cost (see paragraph (b) of this section) and the cost of installation and construction (see paragraph (e) of this section) attributable to the particular contract or subcontract bears to the sum of the total manufacturing cost and the total cost of installation and construction during the period within which the contract or subcontract is performed.

(4) *Bidding, general selling, and general servicing expenses.* The allowable bidding and general selling expenses and general servicing expenses (see paragraph (g) (2) and (3) of this section) shall ordinarily be allocated or distributed to the cost of performing a contract or subcontract on the basis of:

(i) The proportion which the contract price of the particular contract or subcontract bears to the total sales made (including contracts or subcontracts completed) during the period within which the particular contract or subcontract is performed, or

(ii) The proportion which the sum of the manufacturing cost (see paragraph (b) of this section) and the cost of installation and construction (see paragraph (e) of this section) attributable to the particular contract or subcontract bears to the sum of the total manufacturing cost and the total cost of installation and construction during the period within which the contract or subcontract is performed.

except that special consideration shall be given to the relation which certain classes of such expenses bear to the various classes of article produced by the contracting party in each case in which such consideration is necessary in order to make a fair and reasonable determination of the true profit and excess profit. See § 17.14.

§ 17.10 *Credits for net loss and deficiency in profit in computing excess profit—(a) Net loss on contracts and subcontracts for naval vessels or portions thereof.* In the case of contracts or subcontracts for the construction or manufacture of any complete naval vessel or any portion thereof coming within the scope of the act which are completed within an income-taxable year ending after April 3, 1939, the term ''net loss'' as used in the act and in this part means the amount by which the total costs of performing all such contracts and subcontracts completed within such income-taxable year exceeds the total contract prices of such contracts and subcontracts. Such net loss sustained by a contracting party for an income-taxable year ending after April 3, 1939, is allowable as a credit in computing the contracting party's excess profit on contracts and subcontracts for the construction or manufacture of any complete naval vessel or any portion thereof which are completed within the next succeeding income-taxable year.

(b) *Net loss on contracts and subcontracts for aircraft or portions thereof.* In the case of contracts or subcontracts for the construction or manufacture of any complete aircraft or any portion thereof coming within the scope

of the act, which are completed within an income-taxable year ending after April 3, 1939, the term ''net loss'' as used in the act and in these regulations means the amount by which the total costs of performing all such contracts and subcontracts completed within such income-taxable year exceeds the total contract prices of such contracts and subcontracts. Such net loss sustained by a contracting party for an income-taxable year ending after April 3, 1939, is allowable as a credit in computing the contracting party's excess profit on contracts and subcontracts for the construction or manufacture of any complete aircraft or any portion thereof which are completed within the four next succeeding income-taxable years.

(c) *Deficiency in profit.* The term ''deficiency in profit'' as used in the act and in this part relates to contracts and subcontracts coming within the scope of the act which are for the construction or manufacture of any complete aircraft or any portion thereof and are completed within an income-taxable year ending after April 3, 1939. As so used, the term ''deficiency in profit'' means the amount by which 12 percent of the total contract prices of such contracts and subcontracts which are completed by a particular contracting party within the income-taxable year exceeds the net profit upon such contracts and subcontracts. A deficiency in profit sustained by a contracting party with respect to such contracts and subcontracts for the construction or manufacture of complete aircraft or any portion thereof and completed within any income-taxable year ending after April 3, 1939, is allowable as a credit in computing the contracting party's excess profit on contracts and subcontracts for the construction or manufacture of complete aircraft or any portion thereof which are completed within the same or the four next succeeding income-taxable years.

(d) *Claim for credit.* Credit for a deficiency in profit or a net loss may be claimed in the contracting party's annual report of profit filed with the district director of internal revenue (see § 17.16), but it shall be supported by separate schedules for each contract or subcontract involved showing total contract prices, costs of performance and pertinent facts relative thereto, together with a summarized computation of the deficiency in profit or net loss. The deficiency in profit or net loss claimed is subject to verification and adjustment. As to preservation of books and records, see § 17.14. A deficiency in profit or net loss sustained on contracts and subcontracts completed within one income-taxable year may not be considered in computing a net loss or deficiency in profit sustained on contracts and subcontracts completed within another income- taxable year.

(e) *Examples.* The provisions of this section of the regulations may be illustrated by the following examples:

Example (1) For the calendar year 1939 the A Corporation, which keeps its books and makes its Federal income tax returns on a calendar year basis, sustained a net loss of $50,000 upon all contracts and subcontracts coming within the scope of the act which were entered into for the construction or manufacture of any complete naval vessel or any portion thereof and were completed within the calendar year 1939. For the calendar year 1940 the A Corporation had a net profit of $30,000 upon all such contracts and subcontracts completed within the year 1940. It also had a net profit of $10,000 upon other contracts completed within that year all such contracts being for naval aircraft coming within the scope of the act. For the calendar year 1941 the corporation had a net profit of $25,000 upon contracts completed within that year. The net loss of $50,000 sustained in 1939 may be taken as a credit against the net profit of $30,000 realized in 1940 upon the contracts for the construction or manufacture of complete naval vessels or portions thereof completed within that year; but the excess of $20,000 ($50,000 minus $30,000) may not be taken as a credit in computing the excess profit realized upon the other contracts completed in 1940 at a net profit of $10,000 or as a credit in computing the excess profit upon the contracts completed within the year 1941 at a net profit of $25,000.

Example (2). For the calendar year 1939, the B Corporation, which keeps its books and makes its Federal income tax returns on a calendar year basis, sustained a net loss of $10,000 and a deficiency in profit of $35,000 upon all contracts and subcontracts for naval aircraft and portions thereof coming within the scope of the act and completed within that year. During the year 1939, the B Corporation also completed contracts for Army aircraft coming within the scope of the Act at a net profit which was $15,000 in excess of 12 percent of the total contract prices of such contracts. On all contracts and subcontracts for naval aircraft coming within the scope of the act and completed within the calendar year 1940, the B Corporation realized a net profit which was $25,000 in excess of 12 percent of the total contract prices of such contracts and subcontracts while sustaining a deficiency in profit of $10,000 on like contracts and subcontracts for Army aircraft. On all contracts and subcontracts for naval aircraft coming within the scope of the act and completed within the calendar year 1941, the B Corporation realized a net profit which was $20,000 in excess of 12 percent of the total contract prices of such contracts. The net loss of $10,000 and deficiency in profit of $35,000 (or a total of $45,000) sustained in 1939 with respect to contracts and subcontracts for naval aircraft completed within that year may be taken as a credit to the extent of $15,000 in computing the excess

profit on the contracts and subcontracts for Army aircraft completed in 1939. The remainder of such net loss and such deficiency in profit ($45,000 minus $15,000, or $30,000) may be combined with the deficiency in profit of $10,000 sustained in 1940 on contracts for Army aircraft and taken as a credit to the extent of $25,000 in computing the excess profit on the contracts and subcontracts for aircraft completed during 1940. The sum of such net loss and such deficiency in profit then remaining ($40,000 minus $25,000, or $15,000) may be taken as a credit in computing the excess profit realized on the contracts and subcontracts for aircraft completed in the year 1941.

[T.D. 4906, 4 FR 2492, June 27, 1939, as amended by T.D. 6512, 25 FR 12444, Dec. 6, 1960]

§ 17.11 *Credit for Federal income taxes.* For the purpose of computing the amount of excess profit to be paid to the United States, a credit is allowable against the excess profit for the amount of Federal income taxes paid or remaining to be paid on the amount of such excess profit. The ''Federal income taxes'' in respect of which this credit is allowable include the income taxes imposed by Titles I and IA of the Revenue Act of 1938, and Chapter 1 and Subchapter A of Chapter 2 of the Internal Revenue Code, and the excess-profits taxes imposed by section 602 of the Revenue Act of 1938, and Subchapter B of Chapter 2 of the Internal Revenue Code. This credit is allowable for these taxes only to the extent that it is affirmatively shown that they have been finally determined and paid or remain to be paid and that they were imposed upon the excess profit against which the credit is to be made. In case such a credit has been allowed and the amount of Federal income taxes imposed upon the excess profit is redetermined, the credit previously allowed shall be accordingly adjusted.

§ 17.12 *Failure of contractor to require agreement by subcontractor.* (a) Every contract or subcontract coming within the scope of the act is required by the act to contain, among other things, an agreement by the contracting party to make no subcontract unless the subcontractor agrees:

(1) To make a report, as described in the act, under oath to the Secretary of the Navy upon the completion of the subcontract;

(2) To pay into the Treasury excess profit, as determined by the Treasury Department, in the manner and amounts specified in the act;

(3) To make no subdivision of the subcontract for the same article or articles for the purpose of evading the provisions of the act;

(4) That the manufacturing spaces and books of its own plant, affiliates, and subdivisions shall at all times be subject to inspection and audit as provided in the act.

(b) If a contracting party enters into a subcontract with a subcontractor who fails to make such agreement, such contracting party shall, in addition to its liability for excess profit determined on contracts or subcontracts performed by it, be liable for any excess profit determined to be due the United States on the subcontract entered into with such subcontractor. In such event, however, the excess profit to be paid to the United States in respect of the subcontract entered into with such subcontractor shall be determined separately from any contracts or subcontracts performed by the contracting party entering into the subcontract with such subcontractor.

§ 17.13 *Evasion of excess profit.* Section 3 of the act provides that the contracting party shall agree to make no subdivisions of any contract or subcontract for the same article or articles for the purpose of evading the provisions of the act. If any such subdivision or subcontract is made it shall constitute a violation of the agreement provided for in the act, and the cost of completing a contract or subcontract by a contracting party which violates such agreement shall be determined in a manner necessary clearly to reflect the true excess profit of such contracting party.

§ 17.14 *Books of account and records.* (a) It is recognized that no uniform method of accounting can be prescribed for all contracting parties subject to the provisions of the act. Each contracting party is required by law to make a report of its true profit and excess profit. Such party must, therefore, maintain such accounting records as will enable it to do so. See § 17.9. Among the essentials are the following:

(1) The profit or loss upon a particular contract or subcontract shall be accounted for and fully explained in the books of account separately on each contract or subcontract.

(2) Any cost accounting methods, however standard they may be and regardless of long continued practice, shall be controlled by, and be in accord with, the objectives and purposes of the act and of any regulations prescribed thereunder.

(3) The accounts shall clearly disclose the nature and amount of the different items of cost of performing a contract or subcontract.

(b) In cases where it has been the custom priorly to use so-called ''normal'' rates of overhead expense or administrative expenses, or ''standard'' or ''normal'' prices of material or labor charges, no objection will be made to the use temporarily during the period of performing the contract or subcontract of such methods in charging the contract or subcontract, if the method of accounting employed is such as clearly to reflect, in the final determination upon the books of account, the actual profit derived

from the performance of the contract or subcontract and if the necessary adjusting entries are entered upon the books and they explain in full detail the revisions necessary to accord with the facts. As to the elements of cost, see § 17.9.

(c) All books, records, and original evidences of costs (including, for example, production orders, bills or schedules of materials, purchase requisitions, purchase orders, vouchers, requisitions for materials, standing expense orders, inventories, labor time cards, payrolls, cost distribution sheets) pertinent to the determination of the true profit, excess profit, deficiency in profit, or net loss from the performance of a contract or subcontract shall be kept at all times available for inspection by internal revenue officers, and shall be carefully preserved and retained so long as the contents thereof may become material in the administration of the act. This provision is not confined to books, records and original evidences pertaining to items which may be considered to be a part of the cost of performing a contract or subcontract. It is applicable to all books, records and original evidences of costs of each plant, branch or department involved in the performance of a contract or subcontract or in the distribution of costs to the contract or subcontract.

§ 17.15 *Report to Secretary of the Navy.* (a) Upon the completion of a contract or a subcontract coming within the scope of the act and this part, the contracting party is required to make a report, under oath, to the Secretary of the Navy. As to the date of completion of a contract or subcontract, see § 17.5. The act requires that such report shall be in the form prescribed by the Secretary of the Navy and shall state the total contract price, the cost of performing the contract, the net income from such contract, and the per centum such income bears to the contract price. The contracting party shall also include as a part of such report a statement showing:

(1) The manner in which the indirect costs were determined and allocated to the cost of performing the contract or subcontract (see § 17.9);

(2) The name and address of every subcontractor with whom a subcontract was made, the object of such subcontract, the date when completed and the amount thereof; and

(3) The name and address of each affiliate or other organization, trade or business owned or controlled directly or indirectly by the same interests as those who so own or control the contracting party, together with a statement showing in detail all transactions which were made with such affiliate or other organization, trade or business and are pertinent to the determination of the excess profit.

(b) A copy of the report required to be made to the Secretary of the Navy is required to be transmitted by the contracting party to the Secretary of the Treasury. Such copy shall not be transmitted directly to the Secretary of the Treasury but shall be filed as a part of the annual report. See § 17.16.

§ 17.16 *Annual reports for income-taxable years*—(a) *General requirements.* Every contracting party completing a contract or subcontract within the contracting party's income-taxable year ending after April 3, 1939 shall file, with the district director of internal revenue for the internal revenue district in which the contracting party's Federal income tax return is required to be filed, annual reports on the prescribed forms of the profit and excess profit on all contracts and subcontracts coming within the scope of the act. If any contracts or subcontracts so completed by the contracting party were entered into for the construction or manufacture of any complete naval vessel or any portion thereof, the profit and excess profit on all such contracts and subcontracts completed within the income-taxable year ending after April 3, 1939 shall be computed in accordance with the provisions of § 17.6. If any contracts or subcontracts so completed by the contracting party were entered into for the construction or manufacture of any complete naval aircraft or any portion thereof, the profit and excess profit on all such contracts and subcontracts completed within the income-taxable year ending after April 3, 1939 shall be computed in accordance with the provisions of § 17.7. There shall be included as a part of the annual report a statement, preferably in columnar form, showing separately for each contract or subcontract completed by the contracting party within the income-taxable year and covered by the report, the total contract price, the cost of performing the contract or subcontract and resulting profit or loss on each contract or subcontract together with a summary statement showing in detail the computation of the net profit or net loss upon each group of contracts and subcontracts covered by the report and the amount of the excess profit, if any, with respect to each group of contracts and subcontracts covered by the report. A copy of the report made to the Secretary of the Navy (see § 17.15) with respect to each contract or subcontract covered in the annual report, shall be filed as a part of such annual report. In case the income-taxable year of the contracting party is a period of less than twelve months (see § 17.1), the reports required by this section shall be made for such period and not for a full year.

(b) *Time for filing annual reports.* Annual reports of contracts and subcontracts completed by a contracting party within an income-taxable year ending after April 3, 1939 shall be filed on or before the 15th day of the

ninth month following the close of the contracting party's income-taxable year. It is important that the contracting party render on or before the due date annual reports as nearly complete and final as it is possible for the contracting party to prepare. An extension of time granted the contracting party for filing its Federal income tax return does not serve to extend the time for filing the annual reports required by this section. Authority consistent with authorizations for granting extensions of time for filing Federal income tax returns is hereby delegated to the various district directors of internal revenue for granting extensions of time for filing the reports required by this section. Application for extensions of time for filing such reports should be addressed to the district director of internal revenue for the district in which the contracting party files its Federal income tax returns and must contain a full recital of the causes for the delay.

§ 17.17 *Payment of excess profit liability.* The amount of the excess profit liability to be paid to the United States shall be paid on or before the due date for filing the report with the district director of internal revenue. See § 17.16. At the option of the contracting party, the amount of the excess profit liability may be paid in four equal installments instead of in a single payment, in which case the first installment is to be paid on or before the date prescribed for the payment of the excess profit as a single payment, the second installment on or before the 15th day of the third month, the third installment on or before the 15th day of the sixth month, and the fourth installment on or before the 15th day of the ninth month, after such date.

§ 17.18 *Liability of surety.* The surety under contracts entered into after the amendment of section 3(b) of the act of June 25, 1936 shall not be liable for payment of excess profit due the United States in respect of such contracts.

§ 17.19 *Determination of liability for excess profit, interest and penalties; assessment, collection, payment, refunds.* (a) The duty of determining the correct amount of excess profit liability on contracts and subcontracts coming within the scope of the act is upon the Commissioner of Internal Revenue. Under section 3(b) of the act, as amended, and section 651 of the Internal Revenue Code, all provisions of law (including the provisions of law relating to interest, penalties and refunds) applicable with respect to the taxes imposed by Title I of the Revenue Act of 1934 and not inconsistent with section 3 of the act are applicable with respect to the assessment, collection, or payment of excess profits on contracts and subcontracts coming within the scope of the act and to refunds of overpayments of profits into the Treasury under the act. Claims by a contracting party for the refund of an amount of excess profit, interest, penalties, and additions to such excess profit shall conform to the general requirements prescribed with respect to claims for refund of overpayments of taxes imposed by Title I of the Revenue Act of 1934 and, if filed on account of any additional costs incurred pursuant to guarantee provisions in a contract, shall be supplemented by a statement under oath showing the amount and nature of such costs and all facts pertinent thereto.

(b) Administrative procedure for the determination, assessment and collection of excess profit liability under section 3 of the act, sections 650 and 651 of the Internal Revenue Code, and this part, and the examination of reports and claims in connection therewith will be prescribed from time to time by the Commissioner of Internal Revenue.

MITIGATION OF EFFECT OF RENEGOTIATION OF GOVERNMENT CONTRACTS

§ 1.1481–1 [Reserved]

TAX ON TRANSFERS TO AVOID INCOME TAX

§ 1.1491–1 Imposition of tax.

Section 1491 imposes an excise tax upon transfers of stock or securities by a citizen or resident of the United States, or by a domestic corporation or partnership, or by a trust which is not a foreign trust, to a foreign corporation as paid-in surplus or as a contribution to capital, or to a foreign trust, or to a foreign partnership. The tax is in an amount equal to 27½ percent of the excess of (a) the value of the stock or securities so transferred over (b) its adjusted basis, as provided in section 1011, for determining gain in the hands of the transferor.

[T.D. 6500, 25 FR 12082, Nov. 26, 1960]

§ 1.1492–1 Nontaxable transfers.

(a) The tax imposed by section 1491 does not apply:

(1) If the transferee is an organization (other than an organization described in section 401(a) exempt from income tax under the provisions of sections 501 to 504, inclusive; or

(2) If before the transfer it has been established to the satisfaction of the Commissioner that the transfer is not in pursuance of a plan having as one of

its principal purposes the avoidance of Federal income taxes.

(b) Whether a transfer of stock or securities is in pursuance of a plan having as one of its principal purposes the avoidance of Federal income taxes is a question to be determined from the facts and circumstances of each particular case. In any such case where a transferor desires to establish that the transfer is not in pursuance of such a plan, a statement of the facts relating to the plan under which the transfer is to be made or was made, together with a copy of the plan if in writing, shall be forwarded to the Commissioner of Internal Revenue, Washington, DC 20225, for a ruling. This statement shall contain, or be verified by, a written declaration that it is made under the penalties of perjury. A letter notifying the transferor of the Commissioner's determination will be mailed to the transferor.

[T.D. 6500, 25 FR 12082, Nov. 26, 1960]

§ 1.1493–1 Definition of foreign trust.

For taxable years beginning before January 1, 1967, a trust is to be considered a ''foreign trust'' within the meaning of chapter 5 of the Code, if, assuming a subsequent sale by the trustee, outside the United States and for cash, of the property transferred to the trust, the profit, if any, from such sale (being income from sources without the United States under the provisions of part I (section 861 and following), subchapter N, chapter 1 of the Code), would not be included in the gross income of the trust under subtitle A of the Code. For taxable years beginning after December 31, 1966, the term ''foreign trust,'' as used in chapter 5 of the Code, shall have the meaning prescribed by section 7701(a)(31).

[T.D. 7332, 39 FR 44230, Dec. 23, 1974]

§ 1.1494–1 Returns; payment and collection of tax.

(a) *Returns and payment.* Every person making a transfer described in section 1491 shall make a return to the district director on the day on which the transfer is made and, unless the transfer is nontaxable under section 1492, pay the tax due on such transfer. This return, which shall contain, or be verified by, a written declaration that it is made under the penalties of perjury, shall be made on Form 926 and shall be filed with the district director to whom the transferor's return of income is required to be made. The return shall set forth in detail the following information:

(1) Name and address of transferor, and place of organization or creation, if a corporation, partnership, or trust.

(2) Name and address of transferee, place of organization or creation, and whether the transferee is a foreign corporation, a foreign trust, or a foreign partnership. If the transferee is a foreign trust or a foreign partnership, the name and address of the fiduciary and each beneficiary, in the case of a trust, or of each partner, in the case of a partnership, must be shown.

(3) Description and amount of stock or securities transferred, the date of transfer, and a complete statement showing all the facts relating to the transfer, accompanied by a copy of the plan under which the transfer was made.

(4) The fair market value of the stock or securities transferred as of the date of transfer, and the adjusted basis provided in section 1011 for determining gain in the hands of the transferor.

(5) Whether the transfer was made in pursuance of a plan submitted to and approved by the Commissioner as not having as one of its principal purposes the avoidance of Federal income taxes. If the plan has been so approved, a copy of the Commissioner's letter approving the plan shall accompany the return.

(6) Such other information as may be required by the return form.

(b) *Certificate.* (1) If the transferee of the stock or securities, the transfer of which is reported in the return, is a foreign organization meeting the tests of exemption from income tax provided in part I (section 501 and following), subchapter F, chapter 1 of the Code, and the transferor on that account claims that no liability for tax is imposed by section 1491, such transferor must file with Form 926 a certificate establishing the exemption of the transferee under such part I. This certificate, which shall contain, or be verified by, a written declaration that

it is made under the penalties of perjury, shall contain complete information showing the character of the transferee, the purpose for which it was organized, its actual activities, the source of its income and the disposition of such income, whether or not any of its income is credited to surplus or may inure to the benefit of any private shareholder or individual, and in general all facts relating to its operations which affect its right to exemption. To such certificate shall be attached a copy of the charter or articles of incorporation, the by-laws of the organization, and the latest financial statement showing the assets, liabilities, receipts, and disbursements of the organization.

(2) If the transferee is a foreign organization which has been held to be exempt from income tax under such part I (or corresponding provisions of prior law), a copy of the Commissioner's letter so holding shall be filed with Form 926 in lieu of the above certificate and attachments.

(c) *Assessment and collection.* The determination, assessment, and collection of the tax and the examination of returns and claims filed pursuant to chapter 5 of the Code will be made under such procedure as may be prescribed from time to time by the Commissioner.

[T.D. 6500, 25 FR 12082, Nov. 26, 1960]

§ 1.1494–2 Effective date.

Chapter 5 (section 1491 and following) of the Internal Revenue Code of 1954 and the regulations prescribed thereunder apply with respect to transfers occurring after December 31, 1954. (See section 7851(a)(1)(B).) Chapter 7 (section 1250 and following) of the Internal Revenue Code of 1939 and the regulations applicable thereto apply with respect to transfers occurring prior to January 1, 1955.

[T.D. 6500, 25 FR 12083, Nov. 26, 1960]

CONSOLIDATED RETURNS

RETURNS AND PAYMENT OF TAX

CONSOLIDATED RETURN REGULATIONS

§ 1.1502–0 Effective dates.

(a) The regulations under section 1502 are applicable to taxable years beginning after December 31, 1965, except as otherwise provided therein.

(b) The provisions of §§ 1.1502–0A through 1.1502–3A, 1.1502–10A through 1.1502–19A, and 1.1502–30A through 1.1502–51A (as contained in the 26 CFR part 1 edition revised April 1, 1996) are applicable to taxable years beginning before January 1, 1966.

[T.D. 8677, 61 FR 33325, June 27, 1996]

§ 1.1502–1 Definitions.

(a) *Group.* The term *group* means an affiliated group of corporations as defined in section 1504. See § 1.1502–75(d) as to when a group remains in existence. Except as the context otherwise requires, references to a group are references to a consolidated group (as defined in paragraph (h) of this section).

(b) *Member.* The term *member* means a corporation (including the common parent) that is included in the group, or as the context may require, a corporation that is included in a subgroup.

(c) *Subsidiary.* The term *subsidiary* means a corporation other than the common parent which is a member of such group.

(d) *Consolidated return year.* The term *consolidated return year* means a taxable year for which a consolidated return is filed or required to be filed by such group.

(e) *Separate return year.* The term *separate return year* means a taxable year of a corporation for which it files a separate return or for which it joins in the filing of a consolidated return by another group.

(f) *Separate return limitation year*—(1) *In general.* Except as provided in paragraphs (f)(2) and (3) of this section, the term *separate return limitation year* (or *SRLY*) means any separate return year of a member or of a predecessor of a member.

(2) *Exceptions.* The term *separate return limitation year* (or *SRLY*) does not include:

(i) A separate return year of the corporation which is the common parent for the consolidated return year to which the tax attribute is to be carried (except as provided in §1.1502–75(d)(2)(ii) and subparagraph (3) of this paragraph),

(ii) A separate return year of any corporation which was a member of the group for each day of such year, or

(iii) A separate return year of a predecessor of any member if such predecessor was a member of the group for each day of such year,

Provided that an election under section 1562(a) (relating to the privilege to elect multiple surtax exemptions) was never effective (or is no longer effective as a result of a termination of such election) for such year. An election under section 1562(a) which is effective for a taxable year beginning in 1963 and ending in 1964 shall be disregarded.

(3) *Reverse acquisitions.* In the event of an acquisition to which §1.1502–75(d)(3) applies, all taxable years of the first corporation and of each of its subsidiaries ending on or before the date of the acquisition shall be treated as separate return limitation years, and the separate return years (if any) of the second corporation and each of its subsidiaries shall not be treated as separate return limitation years (unless they were so treated immediately before the acquisition). For example, if corporation P merges into corporation T, and the persons who were stockholders of P immediately before the merger, as a result of owning the stock of P, own more than 50 percent of the fair market value of the outstanding stock of T, then a loss incurred before the merger by T (even though it is the common parent), or by a subsidiary of T, is treated as having been incurred in a separate return limitation year. Conversely, a loss incurred before the merger by P, or by a subsidiary of P in a separate return year during all of which such subsidiary was a member of the group of which P was the common parent and for which section 1562 was not effective, is treated as having been incurred in a year which is not a separate return limitation year.

(4) *Predecessor and successors.* The term *predecessor* means a transferor or distributor of assets to a member (the successor) in a transaction—

(i) To which section 381(a) applies; or

(ii) That occurs on or after January 1, 1997, in which the successor's basis for the assets is determined, directly or indirectly, in whole or in part, by reference to the basis of the assets of the transferor or distributor, but in the case of a transaction that occurs before June 25, 1999, only if the amount by which basis differs from value, in the aggregate, is material. For a transaction that occurs before June 25, 1999, only one member may be considered a predecessor to or a successor of one other member.

(g) *Consolidated return change of ownership*—(1) *In general.* A consolidated return change of ownership occurs during any taxable year (referred to in this subparagraph as the ''year of change'') of the corporation which is the common parent for the taxable year to which the tax attribute is to be carried, if, at the end of the year of change:

(i) Any one or more of the persons described in section 382(a)(2) own a percentage of the fair market value of the outstanding stock of such corporation which is more than 50 percentage points greater than such person or persons owned at:

(*a*) The beginning of such taxable year, or

(*b*) The beginning of the preceding taxable year, and

(ii) The increase in percentage points at the end of such year is attributable to:

(*a*) A purchase (within the meaning of section 382(a)(4)) by such person or persons of such stock, the stock of another corporation owning stock in such corporation, or an interest in a partnership or trust owning stock in such corporation, or

(*b*) A decrease in the amount of such stock outstanding or the amount of stock outstanding of another corporation owning stock in such corporation, except a decrease resulting from a redemption to pay death taxes to which section 303 applies.

For purposes of subdivision (i) (*a*) and (*b*) of this subparagraph, the beginning of the taxable years specified therein shall be the beginning of such taxable

years or October 1, 1965, whichever occurs later.

(2) *Operating rules.* For purposes of this paragraph:

(i) The term *stock* means all shares except nonvoting stock which is limited and preferred as to dividends, and

(ii) Section 318 (relating to constructive ownership of stock) shall apply in determining the ownership of stock, except that section 318(a) (2)(C) and (3)(C) shall be applied without regard to the 50-percent limitation contained therein.

(3) *Old members.* The term *old members* of a group means:

(i) Those corporations which were members of such group immediately preceding the first day of the taxable year in which the consolidated return change of ownership occurs, or

(ii) If the group was not in existence prior to the taxable year in which the consolidated return change of ownership occurs, the corporation which is the common parent for the taxable year to which the tax attribute is to be carried.

(4) *Reverse acquisitions.* If there has been a consolidated return change of ownership of a corporation under subparagraph (1) of this paragraph and the stock or assets of such corporation are subsequently acquired by another corporation in an acquisition to which § 1.1502–75(d)(3) applies so that the group of which the former corporation is the common parent is treated as continuing in existence, then the ''old members'', as defined in subparagraph (3) of this paragraph, of such group immediately before the acquisition shall continue to be treated as ''old members'' immediately after the acquisition. For example, assume that corporations P and S comprise group PS, and PS undergoes a consolidated return change of ownership. Subsequently, the stock of P, the common parent, is acquired by corporation T, the common parent of group TU, in an acquisition to which section 368(a)(1)(B) and § 1.1502–75(d)(3) apply. The PS group is treated as continuing in existence with T as the common parent. P and S continue to be treated as old members, as defined in subparagraph (3) of this paragraph.

(h) *Consolidated group.* The term ''consolidated group'' means a group filing (or required to file) consolidated returns for the tax year.

(i) [Reserved]

(j) *Affiliated.* Corporations are affiliated if they are members of a group with each other.

[T.D. 6894, 31 FR 11794, Sept. 8, 1966, as amended by T.D. 7246, 38 FR 758, Jan. 4, 1973; T.D. 8294, 55 FR 9434, Mar. 14, 1990; T.D. 8319, 55 FR 49038, Nov. 26, 1990; T.D. 8560, 59 FR 41675, Aug. 15, 1994; T.D. 8677, 61 FR 33325, June 27, 1996; T.D. 8823, 64 FR 36101, July 2, 1999]

CONSOLIDATED TAX LIABILITY

§ 1.1502–2 Computation of tax liability.

The tax liability of a group for a consolidated return year shall be determined by adding together:

(a) The tax imposed by section 11 on the consolidated taxable income for such year (see § 1.1502–11 for the computation of consolidated taxable income);

(b) The tax imposed by section 541 on the consolidated undistributed personal holding company income;

(c) If paragraph (b) of this section does not apply, the aggregate of the taxes imposed by section 541 on the separate undistributed personal holding company income of the members which are personal holding companies;

(d) If paragraph (b) of this section does not apply, the tax imposed by section 531 on the consolidated accumulated taxable income (see § 1.1502–43);

(e) The tax imposed by section 594(a) in lieu of the taxes imposed by section 11 or 1201 on the taxable income of a life insurance department of the common parent of a group which is a mutual savings bank;

(f) The tax imposed by section 802(a) on consolidated life insurance company taxable income;

(g) The tax imposed by section 831(a) on the consolidated insurance company taxable income of the members which are subject to such tax;

(h) The tax imposed by section 1201, instead of the taxes computed under paragraphs (a) and (g) of this section, computed by reference to the net capital gain of the group (see § 1.1502–22) (or, for consolidated return years to

which § 1.1502–22 does not apply, computed by reference to the excess of the consolidated net long-term capital gain over the consolidated net short-term capital loss (see § 1.1502–41A for the determination of the consolidated net long-term capital gain and the consolidated net short-term capital loss));

(i) [Reserved]

(j) The tax imposed by section 1333 on war loss recoveries; and

by allowing as a credit against such taxes the investment credit under section 38 (see § 1.1502–3), and the foreign tax credit under section 33 (see § 1.1502–4). For purposes of this section, the surtax exemption of the group for a consolidated return year is $25,000, or if a lesser amount is allowed under section 1561, such lesser amount. See § 1.1561–2(a)(2). For increase in tax due to the application of section 47, see § 1.1502–3(f). For amount of tax surcharge, see section 51 and § 1.1502–7.

[T.D. 6894, 31 FR 11794, Sept. 8, 1966, as amended by T.D. 7093, 36 FR 4871, Mar. 13, 1971; T.D. 7937, 49 FR 3462, Jan. 27, 1984; T.D. 8677, 61 FR 33326, June 27, 1996; T.D. 8823, 64 FR 36099, July 2, 1999]

§ 1.1502–3 Consolidated tax credits.

(a) *Determination of amount of consolidated credit*—(1) *In general.* The credit allowed by section 38 for a consolidated return year of a group shall be equal to the consolidated credit earned. The consolidated credit earned is equal to the aggregate of the credit earned (as determined under subparagraph (2) of this paragraph) by all members of the group for the consolidated return year.

(2) *Determination of credit earned.* The credit earned of a member is an amount equal to 7 percent of such member's qualified investment (determined under section 46(c)). For purposes of computing a member's qualified investment, the basis of property shall not include any gain or loss realized with respect to such property by another member in an intercompany transaction (as defined in § 1.1502–13(b)), whether or not such gain or loss is deferred. Thus, if section 38 property acquired in an intercompany transaction has a basis of $100 to the purchasing member, and if the selling member has a $20 gain with respect to such property, the basis of such property for purposes of computing the purchaser's qualified investment is only $80. Such $80 basis shall also be used for purposes of applying section 47 to such property. See paragraph (f) of this section.

(3) *Consolidated limitation based on amount of tax.* (i) Notwithstanding the amount of the consolidated credit earned for the taxable year, the consolidated credit allowed by section 38 to the group for the consolidated return year is limited to:

(*a*) So much of the consolidated liability for tax as does not exceed $25,000, plus

(*b*) For taxable years ending on or before March 9, 1967, 25 percent of the consolidated liability for tax in excess of $25,000, or

(*c*) For taxable years ending after March 9, 1967, 50 percent of the consolidated liability for tax in excess of $25,000.

The $25,000 amount referred to in the preceding sentence shall be reduced by any part of such $25,000 amount apportioned under § 1.46–1 to component members of the controlled group (as defined in section 46(a)(5)) which do not join in the filing of the consolidated return. For further rules for computing the limitation based on amount of tax with respect to the suspension period (as defined in section 48(j)), see section 46(a)(2). The amount determined under this subparagraph is referred to in this section as the ''consolidated limitation based on amount of tax.''

(ii) If an organization to which section 593 applies or a cooperative organization described in section 1381(a) joins in the filing of the consolidated return, the $25,000 amount referred to in subdivision (i) of this subparagraph (reduced as provided in such subdivision) shall be apportioned equally among the members of the group filing the consolidated return. The amount so apportioned equally to any such organization shall then be decreased in accordance with the provisions of section 46(d). Finally, the sum of all such equal portions (as decreased under section 46(d)) of each member of the group shall be substituted for the $25,000 amount referred to in subdivision (i) of this subparagraph.

(4) *Consolidated liability for tax.* For purposes of subparagraph (3) of this

paragraph, the consolidated liability for tax shall be the income tax imposed for the taxable year upon the group by chapter 1 of the Code, reduced by the consolidated foreign tax credit allowable under § 1.1502–4. The tax imposed by section 56 (relating to minimum tax for tax preferences), section 531 (relating to accumulated earnings tax), section 541 (relating to personal holding company tax), and any additional tax imposed by section 1351(d)(1) (relating to recoveries of foreign expropriation losses), shall not be considered tax imposed by chapter 1 of the Code. In addition, any increase in tax resulting from the application of section 47 (relating to certain dispositions, etc., of section 38 property) shall not be treated as tax imposed by chapter 1 for purposes of computing the consolidated liability for tax.

(b) *Carryback and carryover of unused credits*—(1) *Allowance of unused credit as consolidated carryback or carryover.* A group shall be allowed to add to the amount allowable as a credit under paragraph (a)(1) of this section for any consolidated return year an amount equal to the aggregate of the consolidated investment credit carryovers and carrybacks to such year. The consolidated investment credit carryovers and carrybacks to the taxable year shall consist of any consolidated unused credits of the group, plus any unused credits of members of the group arising in separate return years of such members, which may be carried over or back to the taxable year under the principles of section 46(b). However, such consolidated carryovers and carrybacks shall not include any consolidated unused credits apportioned to a corporation for a separate return year pursuant to paragraph (c) of § 1.1502–79 and shall be subject to the limitations contained in paragraphs (c) and (e) of this section. A consolidated unused credit for any consolidated return year is the excess of the consolidated credit earned over the consolidated limitation based on amount of tax for such year.

(2) *Absorption rules.* For purposes of determining the amount, if any, of an unused credit (whether consolidated or separate) which can be carried to a taxable year (consolidated or separate), the amount of such unused credit which is absorbed in a prior consolidated return year under section 46(b) shall be determined by:

(i) Applying all unused credits which can be carried to such prior year in the order of the taxable years in which such unused credits arose, beginning with the taxable year which ends earliest, and

(ii) Applying all such unused credits which can be carried to such prior year from taxable years ending on the same date on a pro rata basis.

(3) *Example.* The provisions of paragraphs (a) and (b) of this section may be illustrated by the following example:

Example. (i) Corporation P is incorporated on January 1, 1966. On that same day P incorporates corporation S, a wholly owned subsidiary. P and S file consolidated returns for calendar years 1966 and 1967. P's and S's credit earned, the consolidated credit earned, and the consolidated limitation based on amount of tax for 1966 and 1967 are as follows:

	Credit earned	Consolidated credit earned	Consolidated limitation based on amount of tax
1966:			
P	$60,000		
S	$30,000	$90,000	$100,000
1967:			
P	$40,000		
S	$25,000	$65,000	$50,000

(ii) P's and S's credit earned for 1966 are aggregated, and the group's consolidated credit earned, $90,000, is allowable in full to the group as a credit under section 38 for 1966 since such amount is less than the consolidated limitation based on amount of tax for 1966, $100,000.

(iii) Since the consolidated limitation based on amount of tax for 1967 is $50,000, only $50,000 of the $65,000 consolidated credit earned for such year is allowable to the

group under section 38 as a credit for 1967. The consolidated unused credit for 1967 of $15,000 ($65,000 less $50,000) is a consolidated investment credit carryback and carryover to the years prescribed in section 46(b). In this case the consolidated unused credit is a consolidated investment credit carryback to 1966 (since P and S were not in existence in 1964 and 1965) and a consolidated investment credit carryover to 1968 and subsequent years. The portion of the consolidated unused credit for 1967 which is allowable as a credit for 1966 is $10,000. This amount shall be added to the amount allowable as a credit to the group for 1966. The balance of the consolidated unused credit for 1967 to be carried to 1968 is $5,000. These amounts are computed as follows:

Consolidated carryback to 1966			$15,000
1966 consolidated limitation based on tax		$100,000	
Less: Consolidated credit earned for 1966	$90,000		
Consolidated unused credits attributable to years preceding 1967	0	$90,000	
Limit on amount of 1967 consolidated unused credit which may be added as a credit for 1966			$10,000
Balance of 1967 consolidated unused credit to be carried to 1968			$5,000

(c) *Limitation on investment credit carryovers and carrybacks from separate return limitation years applicable for consolidated return years for which the due date of the return is on or before March 13, 1998*—(1) *General rule.* In the case of an unused credit of a member of the group arising in a separate return limitation year (as defined in § 1.1502–1(f)) of such member (and in a separate return limitation year of any predecessor of such member), the amount which may be included under paragraph (b) of this section (computed without regard to the limitation contained in paragraph (e) of this section) shall not exceed the amount determined under paragraph (c)(2) of this section.

(2) *Computation of limitation.* The amount referred to in paragraph (c)(1) of this section with respect to a member of the group is the excess, if any, of—

(i) The limitation based on amount of tax of the group, minus such limitation recomputed by excluding the items of income, deduction, and foreign tax credit of such member; over

(ii) The sum of the investment credit earned by such member for such consolidated return year, and the unused credits attributable to such member which may be carried to such consolidated return year arising in unused credit years ending prior to the particular separate return limitation year.

(3) *Special effective date.* This paragraph (c) applies to consolidated return years for which the due date of the income tax return (without extensions) is on or before March 13, 1998. See paragraph (d) of this section for the rule that limits the group's use of a section 38 credit carryover or carryback from a SRLY for a consolidated return year for which the due date of the income tax return (without extensions) is after March 13, 1998. See also paragraph (d)(4) of this section for an optional effective date rule (generally making the rules of this paragraph (c) inapplicable to a consolidated return year beginning after December 31, 1996, if the due date of the income tax return (without extensions) for such year is on or before March 13, 1998).

(4) *Examples.* The provisions of this paragraph (c) may be illustrated by the following examples:

Example 1. (i) Assume the same facts as in the example contained in paragraph (b)(3) of this section, except that all the stock of corporation T, also a calendar year taxpayer, is acquired by P on January 1, 1968, and that P, S, and T file a consolidated return for 1968. In 1966, T had an unused credit of $10,000 which has not been absorbed and is available as an investment credit carryover to 1968. Such carryover is from a separate return limitation year. P's and S's credit earned for 1968 is $10,000 each, and T's credit earned is $8,000; the consolidated credit earned is therefore $28,000. The group's consolidated

limitation based on amount of tax for 1968 is $50,000. Such limitation recomputed by excluding the items of income, deduction, and foreign tax credit of T is $30,000. Thus, the amount determined under paragraph (c)(2)(i) of this section is $20,000 ($50,000 minus $30,000). Accordingly, the limitation on the carryover of T's unused credit is $12,000, the excess of $20,000 over $8,000 (the sum of T's credit earned for the taxable year and any carryovers from prior unused credit years (none in this case)). Therefore T's $10,000 unused credit from 1966 may be carried over to the consolidated return year without limitation.

(ii) The group's consolidated credit earned for 1968, $28,000, is allowable in full as a credit under section 38 since such amount is less than the consolidated limitation based on amount of tax, $50,000.

(iii) The group's consolidated investment credit carryover to 1968 is $15,000, consisting of the consolidated unused credits of the group ($5,000) plus T's separate return year unused credit ($10,000). The entire $15,000 consolidated carryover shall be added to the amount allowable to the group as a credit under section 38 for 1968, since such amount is less than $22,000 (the excess of the consolidated limitation based on tax, $50,000, over the sum of the consolidated credit earned for 1968, $28,000, and unused credits arising in prior unused credit years, zero).

Example 2. Assume the same facts as in *Example 1,* except that the amount determined under paragraph (c)(2)(i) of this section is $12,000. Therefore, the limitation on the carryover of T's unused credit is $4,000. Accordingly, the consolidated investment credit carryover is only $9,000 since the amount of T's separate return year unused credit which may be added to the group's $ 5,000 consolidated unused credit is $4,000. These amounts are computed as follows:

T's carryover to 1968	.....	.....	$10,000
Consolidated limitation based on amount of tax minus recomputed limitation	.....	$12,000	.....
Less: T's credit earned for 1968	$8,000	.....	.....
Unused credits attributable to T arising in unused credit years preceding 1966	0	$8,000	.....
Limit on amount of 1966 unused credit of T which may be added to consolidated investment credit carryover	.....	.....	$4,000
Balance of 1966 unused credit of T to be carried to 1969 (subject to the limitation contained in paragraph (c) of this section)	.....	.....	$6,000

(d) *Limitation on tax credit carryovers and carrybacks from separate return limitation years applicable for consolidated return years for which the due date of the return is after March 13, 1998*—(1) *General rule.* The aggregate of a member's unused section 38 credits arising in SRLYs that are included in the consolidated section 38 credits for all consolidated return years of the group may not exceed—

(i) The aggregate for all consolidated return years of the member's contributions to the consolidated section 38(c) limitation for each consolidated return year; reduced by

(ii) The aggregate of the member's section 38 credits arising and absorbed in all consolidated return years (whether or not absorbed by the member).

(2) *Computational rules*—(i) *Member's contribution to the consolidated section 38(c) limitation.* If the consolidated section 38(c) limitation for a consolidated return year is determined by reference to the consolidated tentative minimum tax (see section 38(c)(1)(A)), then a member's contribution to the consolidated section 38(c) limitation for such year equals the member's share of the consolidated net income tax minus the member's share of the consolidated tentative minimum tax. If the consolidated section 38(c) limitation for a consolidated return year is determined by reference to the consolidated net regular tax liability (see section 38(c)(1)(B)), then a member's contribution to the consolidated section 38(c) limitation for such year equals the member's share of the consolidated net income tax minus 25 percent of the

quantity which is equal to so much of the member's share of the consolidated net regular tax liability less its portion of the $25,000 amount specified in section 38(c)(1)(B). The group computes the member's shares by applying to the respective consolidated amounts the principles of section 1552 and the percentage method under §1.1502–33(d)(3), assuming a 100% allocation of any decreased tax liability. The group must make proper adjustments so that taxes and credits not taken into account in computing the limitation under section 38(c) are not taken into account in computing the member's share of the consolidated net income tax, etc. (See, for example, the taxes described in section 26(b) that are disregarded in computing regular tax liability.) Also, the group may apportion all or a part of the $25,000 amount (or lesser amount if reduced by section 38(c)(3)) for any year to one or more members.

(ii) *Years included in computation.* For purposes of computing the limitation under this paragraph (d), the consolidated return years of the group include only those years, including the year to which a credit is carried, that the member has been continuously included in the group's consolidated return, but exclude—

(A) For carryovers, any years ending after the year to which the credit is carried; and

(B) For carrybacks, any years ending after the year in which the credit arose.

(iii) *Subgroups and successors.* The SRLY subgroup principles under §1.1502–21(c)(2) apply for purposes of this paragraph (d). The predecessor and successor principles under §1.1502–21(f) also apply for purposes of this paragraph (d).

(iv) *Overlap with section 383.* The principles under §1.1502–21(g) apply for purposes of this paragraph (d). For example, an overlap of paragraph (d) of this section and the application of section 383 with respect to a credit carryover occurs if a corporation becomes a member of a consolidated group (the SRLY event) within six months of the change date of an ownership change giving rise to a section 383 credit limitation with respect to that carryover (the section 383 event), with the result that the limitation of this paragraph (d) does not apply. See §§1.1502–21(g)(2)(ii)(A) and 1.383–1; see also §1.1502–21(g)(4) (subgroup rules).

(3) *Effective date*—(i) *In general.* This paragraph (d) generally applies to consolidated return years for which the due date of the income tax return (without extensions) is after March 13, 1998.

(A) *Contribution years.* Except as provided in paragraph (d)(4)(ii) of this section, a group does not take into account a consolidated taxable year for which the due date of the income tax return (without extensions) is on or before March 13, 1998, in determining a member's (or subgroup's) contributions to the consolidated section 38(c) limitation under this paragraph (d).

(B) *Special subgroup rule.* In the event that the principles of §1.1502–21(g)(1) do not apply to a particular credit carryover in the current group, then solely for purposes of applying paragraph (d) of this section to determine the limitation with respect to that carryover and with respect to which the SRLY register (the aggregate of the member's or subgroup's contribution to consolidated section 38(c) limitation reduced by the aggregate of the member's or subgroup's section 38 credits arising and absorbed in all consolidated return years) began in a taxable year for which the due date of the return is on or before May 25, 2000, the principles of §1.1502–21(c)(2) shall be applied without regard to the phrase ''or for a carryover that was subject to the overlap rule described in paragraph (g) of this section or §1.1502–15(g) with respect to another group (the former group).''

(ii) *Overlap rule.* Paragraph (d)(2)(iv) of this section (relating to overlap with section 383) applies to taxable years for which the due date (without extensions) of the consolidated return is after May 25, 2000. For purposes of paragraph (d)(2)(iv) of this section, only an ownership change to which section 383, as amended by the Tax Reform Act of 1986 (100 Stat. 2085), applies and which results in a section 383 credit limitation shall constitute a section 383 event.

(4) *Optional effective date of January 1, 1997.* (i) For consolidated taxable years beginning on or after January 1, 1997,

for which the due date of the income tax return (without extensions) is on or before March 13, 1998, in lieu of paragraphs (c) and (e)(3) of this section (relating to the general business credit), § 1.1502–4(f)(3) and (g)(3) (relating to the foreign tax credit), the next to last sentence of § 1.1502–9A(a)(2), § 1.1502–9A(b)(1)(v) (relating to overall foreign losses), and § 1.1502–55(h)(4)(iii) (relating to the alternative minimum tax credit), a consolidated group may apply the corresponding provisions as they appear in 1998–1 C.B. 655 through 661 (see § 601.601(d)(2) of this chapter) (treating references in such corresponding provisions to §§ 1.1502–9(b)(1)(ii), (iii), and (iv) as references to §§ 1.1502–9A(b)(1)(ii), (iii), and (iv)). Also, in the case of a consolidated return change of ownership that occurs on or after January 1, 1997, in a taxable year for which the due date of the income tax return (without extensions) is on or before March 13, 1998, a consolidated group may choose not to apply paragraph (e) of this section and § 1.1502–4(g) to taxable years ending after December 31, 1996. A consolidated group making the choices described in the two preceding sentences generally must apply all such corresponding provisions (including not applying paragraph (e) of this section and § 1.1502–4(g)) for all relevant years. However, a consolidated group making the election provided in § 1.1502–9A(b)(1)(vi) (electing not to apply § 1.1502–9A(b)(1)(v) to years beginning before January 1, 1998) may nevertheless choose to apply all such corresponding provisions referred to in this paragraph (d)(4)(i) other than the provision corresponding to § 1.1502–9A(b)(1)(v) for all relevant years.

(ii) If a consolidated group chooses to apply the corresponding provisions referred to in paragraph (d)(4)(i) of this section, the consolidated group shall not take into account a consolidated taxable year beginning before January 1, 1997, in determining a member's (or subgroup's) contributions to the consolidated section 38(c) limitation under this paragraph (d).

(5) *Example.* The following example illustrates the provisions of this paragraph (d):

Example. (i) Individual A owns all of the stock of P and T. P is the common parent of the P group. P acquires all the stock of T at the beginning of Year 2. T carries over an unused section 38 general business credit from Year 1 of $100,000. The table in paragraph (i) of this Example shows the group's net consolidated income tax, consolidated tentative minimum tax, and consolidated net regular tax liabilities, and T's share of such taxes computed under the principles of section 1552 and the percentage method under § 1.1502–33(d)(3), assuming a 100% allocation of any decreased tax liability, for Year 2. (The effects of the lower section 11 brackets are ignored, there are no other tax credits affecting a group amount or member's share, and $1,000s are omitted.)

Year 2	Group	P's share of col. 1	T's share of col. 1
1. consolidated taxable income	$2,000	$1,200	$800
2. consolidated net regular tax	$700	$420	$280
3. consolidated alternative minimum taxable income	$4,000	$3,200	$800
4. consolidated tentative minimum tax	$800	$640	$160
5. consolidated net income tax	$800	$520	$280
6. greater of line 4 or 25% of (line 2 minus $25,000) for the group	$800		
7. consolidated §38(c) limitation (line 5 minus line 6)	$0		

(ii) T's Year 1 is a SRLY with respect to the P group. See §1.1502–1(f)(2)(ii). T did not undergo an ownership change giving rise to a section 383 credit limitation within 6 months of joining the P group. Thus, T's $100,000 general business credit arising in Year 1 is subject to a SRLY limitation in the P group. The amount of T's unused section 38 credits from Year 1 that are included in the consolidated section 38 credits for Year 2 may not exceed T's contribution to the consolidated section 38(c) limitation. For Year 2, the group determines the consolidated section 38(c) limitation by reference to consolidated tentative minimum tax for Year 2. Therefore, T's contribution to the consolidated section 38(c) limitation for Year 2 equals its share of consolidated net income tax minus its share of consolidated tentative minimum tax. T's contribution is $280,000 minus $160,000, or $120,000. However, because the

group has a consolidated section 38 limitation of zero, it may not include any of T's unused section 38 credits in the consolidated section 38 credits for Year 2.

(iii) The following table shows similar information for the group for Year 3:

Year 3	Group	P's share of col. 1	T's share of col. 1
1. consolidated taxable income	$1,200	$1,500	$(300)
2. consolidated net regular tax	$420	$525	$(105)
3. consolidated alternative minimum taxable income	$1,500	$1,700	$(200)
4. consolidated tentative minimum tax	$300	$340	$(40)
5. consolidated net income tax	$420	$525	$(105)
6. greater of line 4 or 25% of (line 2 minus $25,000) for the group	$300		
7. consolidated §38(c) limitation (line 5 minus line 6)	$120		

(iv) The amount of T's unused section 38 credits from Year 1 that are included in the consolidated section 38 credits for Year 3 may not exceed T's aggregate contribution to the consolidated section 38(c) limitation

for Years 2 and 3. For Year 3, the group determines the consolidated section 38(c) limitation by reference to the consolidated tentative minimum tax for Year 3. Therefore, T's contribution to the consolidated section 38(c) limitation for Year 3 equals its share of consolidated net income tax minus its share of consolidated tentative minimum tax. Applying the principles of section 1552 and §1.1502–33(d) (taking into account, for example, that T's positive earnings and profits adjustment under §1.1502–33(d) reflects its losses actually absorbed by the group), T's contribution is $(105,000) minus $(40,000), or $(65,000). T's aggregate contribution to the consolidated section 38(c) limitation for Years 2 and 3 is $120,000 + $(65,000), or $55,000. The group may include $55,000 of T's Year 1 unused section 38 credits in its consolidated section 38 tax credit in Year 3.

(e) *Limitation on investment credit carryovers where there has been a consolidated return change of ownership*—(1) *General rule.* If a consolidated return change of ownership (as defined in paragraph (g) of §1.1502–1) occurs during the taxable year or an earlier taxable year, the amount which may be included under paragraph (b) of this section in the consolidated investment credit carryovers to the taxable year with respect to the aggregate unused credits attributable to old members of the group (as defined in paragraph (g)(3) of §1.1502–1) arising in taxable years (consolidated or separate) ending on the same day and before the taxable year in which the consolidated return change of ownership occurred shall not exceed the amount determined under subparagraph (2) of this paragraph.

(2) *Computation of limitation.* The amount referred to in subparagraph (1) of this paragraph shall be the excess of the consolidated limitation based on the amount of tax for the taxable year, recomputed by including only the items of income, deduction, and foreign tax credit of the old members, over the sum of:

(i) The aggregate investment credits earned by the old members for the taxable year, and

(ii) The aggregate unused investment credits attributable to the old members which may be carried to the taxable year arising in unused credit years ending prior to the particular unused credit year or years.

(3) *Special effective date.* This paragraph (e) applies only to a consolidated return change of ownership that occurred during a consolidated return year for which the due date of the income tax return (without extensions) is on or before March 13, 1998. See paragraph (d)(4) of this section for an optional effective date rule (generally making the rules of this paragraph (e) also inapplicable if the consolidated return change of ownership occurred on or after January 1, 1997, and during a consolidated return year for which the due date of the income tax return (without extensions) is on or before March 13, 1998).

(f) *Early dispositions, etc., of section 38 property*—(1) *Dispositions of section 38 property during and after consolidated return year.* If property is subject to section 47(a) (1) or (2) with respect to a member during a consolidated return year, any increase in tax shall be added to the tax liability of the group under §1.1502–2 (regardless of whether the property was placed in service in a consolidated or separate return year). Also, if property is subject to section 47(a) (1) or (2) with respect to a corporation during a taxable year for which such corporation files on a separate return basis, any increase in tax shall be added to the tax liability of such corporation (regardless of whether such property was placed in service in a consolidated or separate return year).

(2) *Exception for transfer to another member.* (i) Except as provided in subdivisions (ii) and (iii) of this subparagraph, a transfer of section 38 property from one member of the group to another member of such group during a consolidated return year shall not be treated as a disposition or cessation within the meaning of section 47(a)(1). If such section 38 property is disposed of, or otherwise ceases to be section 38 property or becomes public utility property with respect to the transferee, before the close of the estimated useful life which was taken into account in computing qualified investment, then section 47(a) (1) or (2) shall apply to the transferee with respect to such property (determined by taking into account the period of use, qualified investment, other dispositions, etc., of the transferor). Any increase in tax due to the application of section 47(a) (1) or (2) shall be added to the tax liability of

such transferee (or the tax liability of a group, if the transferee joins in the filing of a consolidated return).

(ii) Except as provided in subdivision (iii) of this subparagraph, if section 38 property is disposed of during a consolidated return year by one member of the group to another member of such group which is an organization to which section 593 applies or a cooperative organization described in section 1381(a), the tax under chapter 1 of the Code for such consolidated return year shall be increased by an amount equal to the aggregate decrease in the credits allowed under section 38 for all prior taxable years which would result solely from treating such property, for purposes of determining qualified investment, as placed in service by such organization to which section 593 applies or such cooperative organization described in section 1381(a), as the case may be, but with due regard to the use of the property before such transfer.

(iii) Section 47(a)(1) shall apply to a transfer of section 38 property by a corporation during a consolidated return year if such corporation is liquidated in a transaction to which section 334(b)(2) applies.

(3) *Examples.* The provisions of this paragraph may be illustrated by the following examples:

Example (1). P, S, and T file a consolidated return for calendar year 1967. In such year S places in service section 38 property having an estimated useful life of more than 8 years. In 1968, P, S, and T file a consolidated return and in such year S sells such property to T. Such sale will not cause section 47(a)(1) to apply.

Example (2). Assume the same facts as in example (1), except that P, S, and T filed separate returns for 1967. The sale from S to T will not cause section 47(a)(1) to apply.

Example (3). Assume the same facts as in example (1), except that P, S, and T continue to file consolidated returns through 1971 and in such year T disposes of the property to individual A. Section 47(a)(1) will apply to the group and any increase in tax shall be added to the tax liability of the group. For the purposes of determining the actual period of use by T, such period shall include S's period of use.

Example (4). Assume the same facts as in example (3), except that T files a separate return in 1971. Again, the actual periods of use by S and T will be combined in applying section 47. If the disposition results in an increase in tax under section 47(a)(1), such additional tax shall be added to the separate tax liability of T.

Example (5). Assume the same facts as in example (1), except that in 1969, P sells all the stock of T to a third party. Such sale will not cause section 47(a)(1) to apply.

[T.D. 6894, 31 FR 11794, Sept. 8, 1966, as amended by T.D. 7246, 38 FR 758, Jan. 4, 1973; T.D. 8597, 60 FR 36679, July 18, 1995; T.D. 8751, 63 FR 1742, Jan. 12, 1998; T.D. 8766, 63 FR 12642, Mar. 16, 1998; T.D. 8884, 65 FR 33754, May 25, 2000; 65 FR 48379, Aug. 8, 2000; 65 FR 50281, Aug. 17, 2000]

§ 1.1502–4 Consolidated foreign tax credit.

(a) *In general.* The credit under section 901 for taxes paid or accrued to any foreign country or possession of the United States shall be allowed to the group only if the common parent corporation chooses to use such credit in the computation of the tax liability of the group for the consolidated return year. If this choice is made, no deduction may be taken on the consolidated return for such taxes paid or accrued by any member of the group. See section 275(a)(4).

(b) *Limitation effective under section 904(a) for the group*—(1) *Common parent's limitation effective for group.* The determination of whether the overall limitation or the per-country limitation applies for a consolidated return year shall be made by reference to the limitation effective with respect to the common parent corporation for such year. If the limitation effective with respect to a member for its immediately preceding separate return year differs from the limitation effective with respect to the common parent corporation for the consolidated return year, then such member shall, if the overall limitation is effective with respect to the common parent, be deemed to have made an election to use such overall limitation, or, if the per-country limitation is effective with respect to the common parent, be deemed to have revoked its election to use the overall limitation. Consent of the Secretary or his delegate (if otherwise required) is hereby given to such member for such election or revocation. Any such election or revocation shall apply only prospectively beginning with such consolidated return year.

(2) *Limitation effective for subsequent years.* The limitation effective with respect to a member for the last year for which it joins in the filing of a consolidated return with a group shall remain in effect for a subsequent separate return year and may be changed by such corporation for such subsequent year only in accordance with the provisions of section 904(b) (and this paragraph if it joins in the filing of a consolidated return with another group). Any retroactive change in the limitation by the common parent corporation for such member's last consolidated return year shall change the election effective with respect to such member for such last period. Thus, if the common parent (P) elects the overall limitation with respect to calendar year 1966, such election would be effective with respect to its subsidiary S for 1966. If S leaves the group at the beginning of calendar year 1967, such election shall be effective for 1967 with respect to S (unless S revokes such election for 1967 or a subsequent year in accordance with section 904(b), or this paragraph if it joins in the filing of a consolidated return with another group). However, if P retroactively changes back to the per-country limitation with respect to 1966, such limitation would be effective with respect to S for 1966 and subsequent years (unless S elects the overall limitation for any such subsequent year).

(c) *Computation of consolidated foreign tax credit.* The foreign tax credit for the consolidated return year shall be determined on a consolidated basis under the principles of sections 901 through 905 and section 960. For example, if the per-country limitations applies to the consolidated return year, taxes paid or accrued for such year (including those deemed paid or accrued under sections 902 and 960(a) and paragraph (e) of this section) to each foreign country or possession by the members of the group shall be aggregated. If the overall limitation applies, taxes paid or accrued for such year (including those deemed paid or accrued) to all foreign countries and possessions by members of the group shall be aggregated. If the overall limitation applies and a member of the group qualifies as a Western Hemisphere trade corporation, see section 1503(b).

(d) *Computation of limitation on credit.* For purposes of computing the group's applicable limitation under section 904(a), the following rules shall apply:

(1) *Computation of taxable income from foreign sources.* The numerator of the applicable limiting fraction under section 904(a) shall be an amount (not in excess of the amount determined under subparagraph (2) of this paragraph) equal to the aggregate of the separate taxable incomes of the members from sources within each foreign country or possession of the United States (if the per-country limitation is applicable), or from sources without the United States (if the overall limitation is applicable), determined under §1.1502–12, adjusted for the following items taken into account in the computation of consolidated taxable income:

(i) The portion of the consolidated net operating loss deduction, the consolidated charitable contributions deduction, the consolidated dividends received deduction, and the consolidated section 922 deduction, attributable to such foreign source income;

(ii) Any such foreign source capital gain net income (net capital gain for taxable years beginning before January 1, 1977) (determined without regard to any net capital loss carryover or carryback);

(iii) Any such foreign source net capital loss and section 1231 net loss, reduced by the portion of the consolidated net capital loss attributable to such foreign source loss; and

(iv) The portion of any consolidated net capital loss carryover or carryback attributable to such foreign source income which is absorbed in the taxable year.

(2) *Computation of entire taxable income.* The denominator of the applicable limiting fraction under section 904(a) (that is, the entire taxable income of the group) shall be the consolidated taxable income of the group computed in accordance with §1.1502–11.

(3) *Computation of tax against which credit is taken.* The tax against which the limiting fraction under section 904(a) is applied shall be the consolidated tax liability of the group determined under §1.1502–2, but without regard to paragraphs (b), (c), (d), and (j)

thereof, and without regard to any credit against such liability.

(e) *Carryover and carryback of unused foreign tax*—(1) *Allowance of unused foreign tax as consolidated carryover or carryback.* The aggregate of the consolidated unused foreign tax carryovers and carrybacks to the taxable year, to the extent absorbed for such year under the principles of section 904(d), shall be deemed to be paid or accrued to a foreign country or possession for such year. The consolidated unused foreign tax carryovers and carrybacks to the taxable year shall consist of any consolidated unused foreign tax, plus any unused foreign tax of members for separate return years of such members, which may be carried over or back to the taxable year under the principles of section 904 (d) and (e). However, such consolidated carryovers and carrybacks shall not include any consolidated unused foreign taxes apportioned to a corporation for a separate return year pursuant to §1.1502–79(d) and shall be subject to the limitations contained in paragraphs (f) and (g) of this section. A consolidated unused foreign tax is the excess of the foreign taxes paid or accrued by the group (or deemed paid or accrued by the group, other than by reason of section 904(d) over the applicable limitation for the consolidated return year.

(2) *Absorption rules.* For purposes of determining the amount, if any, of an unused foreign tax (consolidated or separate) which can be carried to a taxable year (consolidated or separate), the amount of such unused tax which is absorbed in a prior consolidated return year under section 904(d) shall be determined by:

(i) Applying all unused foreign taxes which can be carried to such prior year in the order of the taxable years in which such unused taxes arose, beginning with the taxable year which ends earliest, and

(ii) Applying all such unused taxes which can be carried to such prior year from taxable years ending on the same date on a pro rata basis.

(f) *Limitation on unused foreign tax carryover or carryback from separate return limitation years*—(1) General rule. In the case of an unused foreign tax of a member of the group arising in a separate return limitation year (as defined in paragraph (f) of §1.1502–1) of such member, the amount which may be included under paragraph (e) of this section (computed without regard to the limitation contained in paragraph (g) of this section) shall not exceed the amount determined under subparagraph (2) of this paragraph.

(2) *Computation of limitation.* The amount referred to in subparagraph (1) of this paragraph with respect to a member of the group is the excess, if any, of:

(i) The section 904(a) limitation of the group, minus such limitation recomputed by excluding the items of income and deduction of such member, over

(ii) The sum of (*a*) the foreign taxes paid (or deemed paid, other than by reason of section 904(d)) by such member for the consolidated return year, and (*b*) the unused foreign tax attributable to such member which may be carried to such consolidated return year arising in taxable years ending prior to the particular separate return limitation year.

(3) *Limitation on unused foreign tax credit carryover or carryback from separate return limitation years.* Paragraphs (f)(1) and (2) of this section do not apply for consolidated return years for which the due date of the income tax return (without extensions) is after March 13, 1998. For consolidated return years for which the due date of the income tax return (without extensions) is after March 13, 1998, a group shall include an unused foreign tax of a member arising in a SRLY without regard to the contribution of the member to consolidated tax liability for the consolidated return year. See also §1.1502–3(d)(4) for an optional effective date rule (generally making the rules of paragraphs (f)(1) and (2) of this section also inapplicable to a consolidated return year beginning on or after January 1, 1997, if the due date of the income tax return (without extensions) for such year is on or before March 13, 1998).

(g) *Limitation on unused foreign tax carryover where there has been a consolidated return change of ownership*—(1) *General rule.* If a consolidated return change of ownership (as defined in

paragraph (g) of § 1.1502–1) occurs during the taxable year or an earlier taxable year, the amount which may be included under paragraph (e) of this section in the consolidated unused foreign tax carryovers to the taxable year with respect to the aggregate unused credits attributable to the old members of the group (as defined in paragraph (g)(3) of § 1.1502–1) arising in taxable years (consolidated or separate) ending on the same day and before the taxable year in which the consolidated return change of ownership occurred shall not exceed the amount determined under subparagraph (2) of this paragraph.

(2) *Computation of limitation.* The amount referred to in subparagraph (1) of this paragraph shall be the excess of the section 904(a) limitation of the group for the taxable year, recomputed by including only the items of income and deduction of the old members of the group, over the sum of:

(i) The aggregate foreign taxes paid (or deemed paid, other than by reason of section 904(d)) by the old members for the taxable year, and

(ii) The aggregate unused foreign tax attributable to the old members which can be carried to the taxable year arising in taxable years ending prior to the particular unused foreign tax year or years.

(3) *Special effective date for CRCO limitation.* Paragraphs (g)(1) and (2) of this section apply only to a consolidated return change of ownership that occurred during a consolidated return year for which the due date of the income tax return (without extensions) is on or before March 13, 1998. See also § 1.1502–3(d)(4) for an optional effective date rule (generally making the rules of paragraph (g)(1) and (2) of this section also inapplicable if the consolidated return change of ownership occurred on or after January 1, 1997, and during a consolidated return year for which the due date of the income tax return (without extensions) is on or before March 13, 1998).

(h) *Amount of credit with respect to interest income.* If any member of the group has interest income described in section 904(f)(2) (for a year for which it filed on a consolidated or separate basis), the group's foreign tax credit with respect to such interest shall be computed separately in accordance with the principles of section 904(f) and this section.

(i) [Reserved]

(j) *Examples.* The provisions of this section may be illustrated by the following examples:

Example (1). Domestic corporation P is incorporated on January 1, 1966. On that same day it also incorporates domestic corporations S and T, wholly owned subsidiaries. P, S, and T file consolidated returns for 1966 and 1967 on the basis of a calendar year. T engages in business solely in country A. S transacts business solely in countries A and B. P does business solely in the United States. During 1966 T sold an item of inventory to P at a profit of $2,000. Under § 1.1502–13 (as contained in the 26 CFR part 1 edition revised as of April 1, 1995) such profit is deferred and none of the circumstances of restoration contained in paragraph (d), (e), or (f) of § 1.1502–13 have occurred as of the close of 1966. The taxable income for 1966 from foreign and United States sources, and the foreign taxes paid on such foreign income are as follows:

Corporation	U.S. taxable income	Country A		Country B		Total taxable income
		Taxable income	Foreign tax paid	Taxable income	Foreign tax paid	
P	$40,000	.....	.....	.....	.....	$40,000
T	.....	$20,000	$12,000	.....	.....	20,000
S	.....	10,000	6,000	$10,000	$3,000	20,000
						$80,000

Such taxable income was computed by taking into account the rules provided in § 1.1502–12. Thus, the $2,000 deferred profit is not included in T's taxable income for 1966 (but will be included for the taxable year for which one of the events specified in paragraph (d), (e), or (f) of § 1.1502–13 occurs). The consolidated taxable income of the group (computed in accordance with § 1.1502–11) is $80,000. The consolidated tax liability against which the credit may be taken (computed in accordance with paragraph (d)(3) of this section) is $31,900.

(i) Assuming P chooses to use the foreign taxes paid as a credit and the group is subject to the per-country limitation, the group may take as a credit against the consolidated tax liability $11,962.50 of the amount paid to country A, plus the $3,000 paid to country B. Such amounts are computed as follows: The aggregate taxes paid to country A of $18,000 is limited to $11,962.50 ($31,900 times $30,000/$80,000). The unused foreign tax with respect to country A is $6,037.50 ($18,000 less $11,962.50), and is a consolidated unused foreign tax which shall be carried to the years prescribed by section 904(d). A credit of $3,000 is available with respect to the taxes paid to country B since such amount is less than the limitation of $3,987.50 ($31,900 times $10,000/$80,000).

(ii) Assuming the overall limitation is in effect for the taxable year, the group may take $15,950 as a credit, computed as follows: The aggregate taxes paid to all foreign countries of $21,000 is limited to $15,950 ($31,900 times $40,000/$80,000). The unused foreign tax is $5,050 ($21,000 less $15,950), and is a consolidated unused foreign tax which shall be carried to the years prescribed by section 904(d).

Example (2). Assume the same facts as in example (1), except that T has a $10,000 long-term capital gain (derived from a sale to a nonmember in country A) and P has a $10,000 long-term capital loss (derived from a sale to a nonmember in the United States). Notwithstanding that the consolidated net capital gain (capital gain net income for taxable years beginning after December 31, 1976) of the group is zero, T's capital gain shall be reflected in full in the computation of taxable income from foreign sources.

Example (3). Assume the same facts as in example (1), except that the group had a consolidated section 172 deduction of $8,000 which is attributable to a net operating loss sustained by T. The $8,000 consolidated net operating loss deduction is offset against T's income from country A, thus reducing T's taxable income from country A to $12,000.

[T.D. 6894, 31 FR 11794, Sept. 8, 1966, as amended by T.D. 7728, 45 FR 72650, Nov. 3, 1980; T.D. 8597, 60 FR 36679, July 18, 1995; T.D. 8766, 63 FR 12642, Mar. 16, 1998; T.D. 8884, 65 FR 33758, May 25, 2000]

§ 1.1502–5 Estimated tax.

(a) *General rule*—(1) *Consolidated estimated tax.* If a group files a consolidated return for two consecutive taxable years, it must make payments of estimated tax on a consolidated basis for each subsequent taxable year, until such time as separate returns are properly filed. Until such time, the group is treated as a single corporation for purposes of section 6154 (relating to payment of estimated tax by corporations). If separate returns are filed by the members for a taxable year, the amount of any estimated tax payments made with respect to a consolidated payment of estimated tax for such year shall be credited against the separate tax liabilities of the members in any manner designated by the common parent which is satisfactory to the Commissioner. The consolidated payments of estimated tax shall be deposited with the authorized financial institution with which the common parent deposits its estimated tax payments. A statement should be attached to the payment setting forth the name, address, employer identification number, and internal revenue service center of each member.

(2) *First two consolidated return years.* For the first 2 years for which a group files a consolidated return, it may make payments of estimated tax on either a consolidated or separate basis. If a consolidated return is filed for such year, the amount of any estimated tax payments made for such year by any member shall be credited against the tax liability of the group.

(3) *Effective date.* This section applies to taxable years for which the due date (without extensions) for filing returns is after August 6, 1979. For prior taxable years see 26 CFR 1.1502–5 (Revised as of April 1, 1978).

(b) *Addition to tax for failure to pay estimated tax under section 6655*—(1) *Consolidated return filed.* For the first two taxable years for which a group files a consolidated return, the group may compute the amount of the penalty (if any) under section 6655 on a consolidated basis or separate member basis, regardless of the method of payment. Thereafter, for a taxable year for which the group files a consolidated return, the group must compute the penalty on a consolidated basis.

(2) *Computation of penalty on consolidated basis.* (i) This paragraph (b)(2) gives the rules for computing the penalty under section 6655 on a consolidated basis.

(ii) The tax and facts shown on the return for the preceding taxable year referred to in section 6655(d) (1) and (2) are, if a consolidated return was filed for that preceding year, such items

shown on the consolidated return for that preceding year or, if one was not filed for that preceding year, the aggregate taxes and the facts shown on the separate returns of the common parent and any other corporation that was a member of the same affiliated group as the common parent for that preceding year.

(iii) If estimated tax was not paid on a consolidated basis, then the amount of the group's payments of estimated tax for the taxable year is the aggregate of the payments made by all members for the year.

(iv) Section 6655(d)(1) applies only if the common parent's consolidated return, or each member's separate return, for the preceding taxable year (as the case may be) was a taxable year of 12 months.

(3) *Computation of penalty on separate member basis.* To compute any penalty under section 6655 on a separate member basis, for purposes of section 6655(b)(1), the ''tax shown on the return for the taxable year'' is the portion of the tax shown on the consolidated return allocable to the member under paragraph (b)(5) of this section. If the member was included in the consolidated return filed by the group for the preceding taxable year then:

(i) For purposes of section 6655(d)(1), the ''tax shown on the return'' for any member shall be the portion of the tax shown on the consolidated return for the preceding year allocable to the member under paragraph (b)(5) of this section.

(ii) For purposes of section 6655(d)(2), the ''facts shown on the return'' shall be the facts shown on the consolidated return for the preceding year and the tax computed under that section shall be allocated under the rules of paragraph (b)(5) of this section.

(4) *Consolidated payments if separate returns filed.* If the group does not file a consolidated return for the taxable year, but makes payments of estimated tax on a consolidated basis, for purposes of section 6655(b)(2), the ''amount, if any of the installment paid'' by any member is an amount apportioned to the member in a manner designated by the common parent that is satisfactory to the Commissioner. If the member was included in the consolidated return filed by the group for the preceding taxable year, the amount of a member's penalty under section 6655 is computed on the separate member basis described in paragraph (b)(3)(i) and (ii) of this section.

(5) *Rules for allocation of consolidated tax liability.* For purposes of subparagraphs (1) and (2) of this paragraph, the tax shown on a consolidated return shall be allocated to the members of the group under the method which the group has elected pursuant to section 1552 and 1.1502–33(d)(2).

(c) *Examples.* The provisions of this section may be illustrated by the following examples:

Example (1). Corporations P and S–1 file a consolidated return for the first time for calendar year 1978. P and S–1 also file consolidated returns for 1979 and 1980. For 1978 and 1979, P and S–1 may make payments of estimated tax on either a separate or consolidated basis. For 1980, however, the group must pay its estimated tax on a consolidated basis. In determining whether P and S–1 come within the exception provided in section 6655(d)(1) for 1980, the ''tax shown on the return'' is the tax shown on the consolidated return for 1979.

Example (2). Assume the same facts as in example (1). Assume further that corporation S–2 was a member of the group during 1979, and joins in the filing of the consolidated return for such year but ceases to be a member of the group on September 15, 1980. In determining whether the group (which no longer includes S–2) comes within the exception provided in section 6655(d)(1) for 1980, the ''tax shown on the return'' is the tax shown on the consolidated return for 1979.

Example (3). Assume the same facts as in example (1). Assume further that corporation S–2 becomes a member of the group on July 1, 1980, and joins in the filing of the consolidated return for 1968. In determining whether the group (which now includes S–2) comes within the exception provided in section 6655(d)(1) for 1980, the ''tax shown on the return'' is the tax shown on the consolidated return for 1979. Any tax of S–2 for any separate return year is not included as a part of the ''tax shown on the return'' for purposes of applying section 6655(d)(1).

Example (4). Corporations X and Y filed consolidated returns for the calendar years 1977 and 1978 and separate returns for 1979. In determining whether X and Y comes within the exception provided in section 6655(d)(1) for 1979, the ''tax shown on the return'' is the amount of tax shown on the consolidated return for 1978 allocable to X and Y in accordance with paragraph (b)(5) of this section.

(d) *Cross reference.* For provisions relating to quick refunds of corporate estimated tax payments, see § 1.1502–78, and §§ 1.6425–1 through 1.6425–3.

[T.D. 6894, 31 FR 11794, Sept. 8, 1966, as amended by T.D. 7059, 35 FR 14549, Sept. 17, 1970; T.D. 7637, 44 FR 46840, Aug. 9, 1979; 62 FR 23657, May 1, 1997; T.D. 8952, 66 FR 33831, June 26, 2001]

§ 1.1502–6 Liability for tax.

(a) *Several liability of members of group.* Except as provided in paragraph (b) of this section, the common parent corporation and each subsidiary which was a member of the group during any part of the consolidated return year shall be severally liable for the tax for such year computed in accordance with the regulations under section 1502 prescribed on or before the due date (not including extensions of time) for the filing of the consolidated return for such year.

(b) *Liability of subsidiary after withdrawal.* If a subsidiary has ceased to be a member of the group and in such cessation resulted from a bona fide sale or exchange of its stock for fair value and occurred prior to the date upon which any deficiency is assessed, the Commissioner may, if he believes that the assessment or collection of the balance of the deficiency will not be jeopardized, make assessment and collection of such deficiency from such former subsidiary in an amount not exceeding the portion of such deficiency which the Commissioner may determine to be allocable to it. If the Commissioner makes assessment and collection of any part of a deficiency from such former subsidiary, then for purposes of any credit or refund of the amount collected from such former subsidiary the agency of the common parent under the provisions of § 1.1502–77 shall not apply.

(c) *Effect of intercompany agreements.* No agreement entered into by one or more members of the group with any other member of such group or with any other person shall in any case have the effect of reducing the liability prescribed under this section.

[T.D. 6894, 31 FR 11794, Sept. 8, 1966, as amended by T.D. 9002, 67 FR 43540, June 28, 2002]

§ 1.1502–9 Consolidated overall foreign losses and separate limitation losses.

(a) *In general.* This section provides rules for applying section 904(f) (including its definitions and nomenclature) to a group and its members. Generally, section 904(f) concerns rules relating to overall foreign losses (OFLs) and separate limitation losses (SLLs) and the consequences of such losses. As provided in section 904(f)(5), losses are computed separately in each category of income described in section 904(d)(1) (basket). Paragraph (b) of this section defines terms and provides computational and accounting rules, including rules regarding recapture. Paragraph (c) of this section provides rules that apply to OFLs and SLLs when a member becomes or ceases to be a member of a group. Paragraph (d) of this section provides a predecessor and successor rule. Paragraph (e) of this section provides effective dates.

(b) *Consolidated application of section 904(f).* A group applies section 904(f) for a consolidated return year in accordance with that section, subject to the following rules:

(1) *Computation of CSLI or CSLL and consolidated U.S. source income or loss.* The group computes its consolidated separate limitation income (CSLI) or consolidated separate limitation loss (CSLL) for each basket under the principles of § 1.1502–11 by aggregating each member's foreign-source taxable income or loss in such basket computed under the principles of § 1.1502–12, and taking into account the foreign portion of the consolidated items described in § 1.1502–11(a)(2) through (8) for such basket. The group computes its consolidated U.S.-source taxable income or loss under similar principles.

(2) *Netting CSLLs, CSLIs, and consolidated U.S. source taxable income or loss.* The group applies section 904(f)(5) to determine the extent to which a CSLL for a basket reduces CSLI for another basket or consolidated U.S.-source taxable income.

(3) *CSLL and COFL accounts.* To the extent provided in section 904(f), the amount by which a CSLL for a basket (the loss basket) reduces CSLI for another basket (the income basket) shall result in the creation of (or addition

to) a CSLL account for the loss basket with respect to the income basket. Likewise, the amount by which a CSLL for a loss basket reduces consolidated U.S.-source income will create (or add to) a consolidated overall foreign loss account (a COFL account).

(4) *Recapture of COFL and CSLL accounts.* In the case of a COFL account for a loss basket, section 904(f)(1) and (3) recharacterizes some or all of the foreign-source income in the loss basket as U.S.-source income. In the case of a CSLL account for a loss basket with respect to an income basket, section 904(f)(5)(C) and (F) recharacterizes some or all of the foreign-source income in the loss basket as foreign-source income in the income basket. The COFL account or CSLL account is reduced to the extent amounts are recharacterized with respect to such account.

(5) *Intercompany transactions*—(i) *Non-application of section 904(f) disposition rules.* Neither section 904(f)(3) (in the case of a COFL account) nor (5)(F) (in the case of a CSLL account) applies at the time of a disposition that is an intercompany transaction to which §1.1502–13 applies. Instead, section 904(f)(3) and (5)(F) applies only at such time and only to the extent that the group is required under §1.1502–13 (without regard to section 904(f)(3) and (5)(F)) to take into account any intercompany items resulting from the disposition, based on the COFL or CSLL account existing at the end of the consolidated return year during which the group takes the intercompany items into account.

(ii) *Example.* Paragraph (b)(5)(i) of this section is illustrated by the following examples. The identity of the parties and the basic assumptions set forth in §1.1502–13(c)(7)(i) apply to the examples. Except as otherwise stated, assume further that the consolidated group recognizes no foreign-source income other than as a result of the transactions described. The examples are as follows:

Example 1. (i) On June 10, Year 1, S transfers nondepreciable property with a basis of $100 and a fair market value of $250 to B in a transaction to which section 351 applies. The property was predominantly used without the United States in a trade or business, within the meaning of section 904(f)(3). B continues to use the property without the United States. The group has a COFL account in the relevant loss basket of $120 as of December 31, Year 1.

(ii) Because the contribution from S to B is an intercompany transaction, section 904(f)(3) does not apply to result in any gain recognition in Year 1. See paragraph (b)(5)(i) of this section.

(iii) On January 10, Year 4, B ceases to be a member of the group. Because S did not recognize gain in Year 1 under section 351, no gain is taken into account in Year 4 under §1.1502–13(d). Thus, no portion of the group's COFL account is recaptured in Year 4. For rules requiring apportionment of a portion of the COFL account to B, see paragraph (c)(2) of this section.

Example 2. (i) The facts are the same as in paragraph (i) of *Example 1.* On January 10, Year 4, B sells the property to X for $300. As of December 31, Year 4, the group's COFL account is $40. (The COFL account was reduced between Year 1 and Year 4 due to unrelated foreign-source income taken into account by the group.)

(ii) B takes into account gain of $200 in Year 4. The $40 COFL account in Year 4 recharacterizes $40 of the gain as U.S. source. See section 904(f)(3).

Example 3. (i) On June 10, Year 1, S sells nondepreciable property with a basis of $100 and a fair market value of $250 to B for $250 cash. The property was predominantly used without the United States in a trade or business, within the meaning of section 904(f)(3). The group has a COFL account in the relevant loss basket of $120 as of December 31, Year 1. B predominately uses the property in a trade or business without the United States.

(ii) Because the sale is an intercompany transaction, section 904(f)(3) does not require the group to take into account any gain in Year 1. Thus, under paragraph (b)(5)(i) of this section, the COFL account is not reduced in Year 1.

(iii) On January 10, Year 4, B sells the property to X for $300. As of December 31, Year 4, the group's COFL account is $60. (The COFL account was reduced between Year 1 and Year 4 due to unrelated foreign-source income taken into account by the group.)

(iv) In Year 4, S's $150 intercompany gain and B's $50 corresponding gain are taken into account to produce the same effect on consolidated taxable income as if S and B were divisions of a single corporation. See §1.1502–13(c). All of B's $50 corresponding gain is recharacterized under section 904(f)(3). If S and B were divisions of a single corporation and the intercompany sale were a transfer between the divisions, B would succeed to S's $100 basis in the property and would have $200 of gain ($60 of which would be recharacterized under section 904(f)(3)), instead

of a $50 gain. Consequently, S's $150 intercompany gain and B's $50 corresponding gain are taken into account, and $10 of S's gain is recharacterized under section 904(f)(3) as U.S. source to reflect the $10 difference between B's $50 recharacterized gain and the $60 recomputed gain that would have been recharacterized.

(c) *Becoming or ceasing to be a member of a group*—(1) *Adding separate accounts on becoming a member.* At the time that a corporation becomes a member of a group (a new member), the group adds to the balance of its COFL or CSLL account the balance of the new member's corresponding OFL account or SLL account. A new member's OFL account corresponds to a COFL account if the account is for the same loss basket. A new member's SLL account corresponds to a CSLL account if the account is for the same loss basket and with respect to the same income basket. If the group does not have a COFL or CSLL account corresponding to the new member's account, it creates a COFL or CSLL account with a balance equal to the balance of the member's account.

(2) *Apportionment of consolidated account to departing member*—(i) *In general.* A group apportions to a member that ceases to be a member (a departing member) a portion of each COFL and CSLL account as of the end of the year during which the member ceases to be a member and after the group makes the additions or reductions to such account required under paragraphs (b)(3), (b)(4) and (c)(1) of this section (other than an addition under paragraph (c)(1) of this section attributable to a member becoming a member after the departing member ceases to be a member). The group computes such portion under paragraph (c)(2)(ii) of this section, as limited by paragraph (c)(2)(iii) of this section. The departing member carries such portion to its first separate return year after it ceases to be a member. Also, the group reduces each account by such portion and carries such reduced amount to its first consolidated return year beginning after the year in which the member ceases to be a member. If two or more members cease to be members in the same year, the group computes the portion allocable to each such member (and reduces its accounts by such portion) in the order that the members cease to be members.

(ii) *Departing member's portion of group's account.* A departing member's portion of a group's COFL or CSLL account for a loss basket is computed based upon the member's share of the group's assets that generate income subject to recapture at the time that the member ceases to be a member. Under the characterization principles of §§1.861–9T(g)(3) and 1.861–12T, the group identifies the assets of the departing member and the remaining members that generate foreign-source income (foreign assets) in each basket. The assets are characterized based upon the income that the assets are reasonably expected to generate after the member ceases to be a member. The member's portion of a group's COFL or CSLL account for a loss basket is the group's COFL or CSLL account, respectively, multiplied by a fraction, the numerator of which is the value of the member's foreign assets for the loss basket and the denominator of which is the value of the foreign assets of the group (including the departing member) for the loss basket. The value of the foreign assets is determined under the asset valuation rules of §1.861–9T(g)(1) and (2) using either tax book value or fair market value under the method chosen by the group for purposes of interest apportionment as provided in §1.861–9T(g)(1)(ii). For purposes of this paragraph (c)(2)(ii), §1.861–9T(g)(2)(iv) (assets in intercompany transactions) shall apply, but §1.861–9T(g)(2)(iii) (adjustments for directly allocated interest) shall not apply. If the group uses the tax book value method, the member's portions of COFL and CSLL accounts are limited by paragraph (c)(2)(iii) of this section. In addition, for purposes of this paragraph (c)(2)(ii), the tax book value of assets transferred in intercompany transactions shall be determined without regard to previously deferred gain or loss that is taken into account by the group as a result of the transaction in which the member ceases to be a member. The assets should be valued at the time the member ceases to be a member, but values on other dates may be used unless this creates substantial distortions. For example, if a member

ceases to be a member in the middle of the group's consolidated return year, an average of the values of assets at the beginning and end of the year (as provided in § 1.861–9T(g)(2)) may be used or, if a member ceases to be a member in the early part of the group's consolidated return year, values at the beginning of the year may be used, unless this creates substantial distortions.

(iii) *Limitation on member's portion for groups using tax book value method.* If a group uses the tax book value method of valuing assets for purposes of paragraph (c)(2)(ii) of this section and the aggregate of a member's portions of COFL and CSLL accounts for a loss basket (with respect to one or more income baskets) determined under paragraph (c)(2)(ii) of this section exceeds 150 percent of the actual fair market value of the member's foreign assets in the loss basket, the member's portion of the COFL or CSLL accounts for the loss basket shall be reduced (proportionately, in the case of multiple accounts) by such excess. This rule does not apply if the departing member and all other members that cease to be members as part of the same transaction own all (or substantially all) the foreign assets in the loss basket.

(iv) *Determination of values of foreign assets binding on departing member.* The group's determination of the value of the member's and the group's foreign assets for a loss basket is binding on the member, unless the Commissioner concludes that the determination is not appropriate. The common parent of the group must attach a statement to the return for the taxable year that the departing member ceases to be a member of the group that sets forth the name and taxpayer identification number of the departing member, the amount of each COFL or CSLL for each loss basket that is apportioned to the departing member under this paragraph (c)(2), the method used to determine the value of the member's and the group's foreign assets in each such loss basket, and the value of the member's and the group's foreign assets in each such loss basket. The common parent must also furnish a copy of the statement to the departing member.

(v) *Anti-abuse rule.* If a corporation becomes a member and ceases to be a member, and a principal purpose of the corporation becoming and ceasing to be a member is to transfer the corporation's OFL account or SLL account to the group or to transfer the group's COFL or CSLL account to the corporation, appropriate adjustments will be made to eliminate the benefit of such a transfer of accounts. Similarly, if any member acquires assets or disposes of assets (including a transfer of assets between members of the group and the departing member) with a principal purpose of affecting the apportionment of accounts under paragraph (c)(2)(i) of this section, appropriate adjustments will be made to eliminate the benefit of such acquisition or disposition.

(vi) *Examples.* The following examples illustrate this paragraph (c):

Example 1. (i) On November 6, Year 1, S, a member of the P group, a consolidated group with a calendar consolidated return year, ceases to be a member of the group. On December 31, Year 1, the P group has a $40 COFL account for the general limitation basket, a $20 CSLL account for the general limitation basket (i.e., the loss basket) with respect to the passive basket (i.e., the income basket), and a $10 CSLL account for the shipping income basket (i.e., the loss basket) with respect to the passive basket (i.e., the income basket). No member of the group has foreign-source income or loss in Year 1. The group apportions its interest expense according to the tax book value method.

(ii) On November 6, Year 1, the group identifies S's assets and its own assets (including S's assets) expected to produce foreign general limitation income. Use of end-of-the-year values will not create substantial distortions in determining the relative values of S's and the group's relevant assets on November 6, Year 1. The group determines that S's relevant assets have a tax book value of $2,000 and a fair market value of $2,200. Also, the group's relevant assets (including S's assets) have a tax book value of $8,000. On November 6, Year 1, S has no assets expected to produce foreign shipping income.

(iii) Under paragraph (c)(2)(ii) of this section, S takes a $10 COFL account for the general limitation basket ($40 × $2000/$8000) and a $5 CSLL account for the general limitation basket with respect to the passive basket ($20 × $2000/$8000). S does not take any portion of the shipping income basket CSLL account. The limitation described in paragraph (c)(2)(iii) of this section does not apply because the aggregate of the COFL and CSLL accounts for the general limitation basket that are apportioned to S ($15) is less than 150 percent of the actual fair market value of

S's general limitation foreign assets ($2,200 × 150%).

Example 2. (i) Assume the same facts as in *Example 1,* except that the fair market value of S's general limitation foreign assets is $4 as of November 6, Year 1.

(ii) Under paragraph (c)(2)(iii) of this section, S's COFL and CSLL accounts for the general limitation basket must be reduced by $9, which is the excess of $15 (the aggregate amount of the accounts apportioned under paragraph (c)(2)(ii) of this section) over $6 (150 percent of the $4 actual fair market value of S's general limitation foreign assets). S thus takes a $4 COFL account for the general limitation basket ($10 − ($9 × $10/$15)) and a $2 CSLL account for the general limitation basket with respect to the passive basket ($5 − ($9 × $5/$15)).

(d) *Predecessor and successor.* A reference to a member includes, as the context may require, a reference to a predecessor or successor of the member. See § 1.1502–1(f).

(e) *Effective dates.* This section applies to consolidated return years for which the due date of the income tax return (without extensions) is after August 11, 1999. However, paragraph (b)(5) of this section (intercompany transactions) is not applicable for intercompany transactions that occur before January 28, 1999. A group applies the principles of § 1.1502–9A(e) to a disposition which is an intercompany transaction to which § 1.1502–13 applies and that occurs before January 28, 1999. Also, paragraph (c)(2) of this section (apportionment of consolidated account to departing member) is not applicable for members ceasing to be members of a group before January 28, 1999. A group applies the principles of § 1.1502–9A (rather than paragraph (c)(2) of this section) to determine the amount of a consolidated account that is apportioned to a member that ceases to be a member of the group before January 28, 1999 (and reduces its consolidated account by such apportioned amount) before applying paragraph (c)(2) of this section to members that cease to be members on or after January 28, 1999.

[T.D. 8833, 64 FR 43616, Aug. 11, 1999]

COMPUTATION OF CONSOLIDATED TAXABLE INCOME

§ 1.1502–11 Consolidated taxable income.

(a) *In general.* The consolidated taxable income for a consolidated return year shall be determined by taking into account:

(1) The separate taxable income of each member of the group (see § 1.1502–12 for the computation of separate taxable income);

(2) Any consolidated net operating loss deduction (see §§ 1.1502–21 (or 1.1502-21A, as appropriate) for the computation of the consolidated net operating loss deduction);

(3) Any consolidated capital gain net income (net capital gain for taxable years beginning before January 1, 1977) (see §§ 1.1502–22 (or 1.1502-22A, as appropriate) for the computation of the consolidated capital gain net income (net capital gain for taxable years beginning before January 1, 1977));

(4) Any consolidated section 1231 net loss (see §§ 1.1502–23 (or 1.1502-23A, as appropriate) for the computation of the consolidated section 1231 net loss);

(5) Any consolidated charitable contributions deduction (see § 1.1502–24 for the computation of the consolidated charitable contributions deduction);

(6) Any consolidated section 922 deduction (see § 1.1502–25 for the computation of the consolidated section 922 deduction);

(7) Any consolidated dividends received deduction (see § 1.1502–26 for the computation of the consolidated dividends received deduction); and

(8) Any consolidated section 247 deduction (see § 1.1502–27 for the computation of the consolidated section 247 deduction).

(b) *Elimination of circular stock basis adjustments when there is no excluded COD income*—(1) *In general.* If one member (P) disposes of the stock of another member (S), this paragraph (b) limits the use of S's deductions and losses in the year of disposition and the carryback of items to prior years. The purpose of the limitation is to prevent P's income or gain from the disposition of S's stock from increasing the absorption of S's deductions and losses, because the increased absorption would

reduce P's basis (or increase its excess loss account) in S's stock under §1.1502–32 and, in turn, increase P's income or gain. See paragraph (b)(3) of this section for the application of these principles to P's deduction or loss from the disposition of S's stock, and paragraph (b)(4) of this section for the application of these principles to multiple stock dispositions. This paragraph (b) applies only when no member realizes discharge of indebtedness income that is excluded from gross income under section 108(a) (excluded COD income) during the taxable year of the disposition. See paragraph (c) of this section for rules that apply when a member realizes excluded COD income during the taxable year of the disposition. See §1.1502–19(c) for the definition of disposition.

(2) *Limitation on deductions and losses*—(i) *Determination of amount of limitation*. If P disposes of one or more shares of S's stock, the extent to which S's deductions and losses for the tax year of the disposition (and its deductions and losses carried over from prior years) may offset income and gain is subject to limitation. The amount of S's deductions and losses that may offset income and gain is determined by tentatively computing taxable income (or loss) for the year of disposition (and any prior years to which the deductions or losses may be carried) without taking into account P's income and gain from the disposition.

(ii) *Application of limitation*. S's deductions and losses offset income and gain only to the extent of the amount determined under paragraph (b)(2)(i) of this section. To the extent S's deductions and losses in the year of disposition cannot offset income or gain because of the limitation under this paragraph (b), the items are carried to other years under the applicable provisions of the Internal Revenue Code and regulations as if they were the only items incurred by S in the year of disposition. For example, to the extent S incurs an operating loss in the year of disposition that is limited, the loss is treated as a separate net operating loss attributable to S arising in that year. The tentative computation does not affect the manner in which S's unlimited deductions and losses are absorbed or the manner in which deductions and losses of other members are absorbed. (If the amount of S's unlimited deductions and losses actually absorbed is less than the amount absorbed in the tentative computation, P's stock basis adjustments under §1.1502–32 reflect only the amounts actually absorbed.)

(iii) *Examples*. For purposes of the examples in this paragraph (b), unless otherwise stated, P owns all of the only class of S's stock for the entire year, S owns no stock of lower-tier members, the tax year of all persons is the calendar year, all persons use the accrual method of accounting, the facts set forth the only corporate activity, all transactions are between unrelated persons, and tax liabilities are disregarded. The principles of this paragraph (b)(2) are illustrated by the following examples.

Example 1. Limitation on losses with respect to stock gain. (a) P has a $500 basis in S's stock. For Year 1, P has ordinary income of $30 (determined without taking P's gain or loss from the disposition of S's stock into account) and S has an $80 ordinary loss. P sells S's stock for $520 at the close of Year 1.

(b) To determine the amount of the limitation on S's loss under paragraph (b)(2)(i) of this section, and the effect under §1.1502–32(b) of the absorption of S's loss on P's basis in S's stock, P's gain or loss from the disposition of S's stock is not taken into account. The group is tentatively treated as having a consolidated net operating loss of $50 (P's $30 of income minus S's $80 loss). Thus, $50 of S's loss is limited under this paragraph (b).

(c) Because $30 of S's loss is absorbed in the determination of consolidated taxable income under paragraph (b)(2)(ii) of this section, P's basis in S's stock is reduced under §1.1502–32(b) from $500 to $470 immediately before the disposition. Consequently, P recognizes a $50 gain from the sale of S's stock and the group has consolidated taxable income of $50 for Year 1 (P's $30 of ordinary income and $50 gain from the sale of S's stock, less the $30 of S's loss). In addition, S's limited loss of $50 is treated as a separate net operating loss attributable to S and, because S ceases to be a member, the loss is apportioned to S under §1.1502–21 (or §1.1502-79A, as appropriate) and carried to its first separate return year.

Example 2. Carrybacks and carryovers. (a) For Year 1, the P group has consolidated taxable income of $30, and a consolidated net capital loss of $100 ($50 attributable to P and $50 to S). At the beginning of Year 2, P has a $300 basis in S's stock. For Year 2, P has

ordinary income of $30, and a $20 capital gain (determined without taking the $100 consolidated net capital loss carryover or P's gain or loss from the disposition of S's stock into account), and S has a $100 ordinary loss. P sells S's stock for $280 at the close of Year 2.

(b) To determine the amount of the limitation under paragraph (b)(2)(i) of this section on S's losses, and the effect of the absorption of S's losses on P's basis in S's stock under § 1.1502–32(b), P's gain or loss from the disposition of S's stock is not taken into account. For Year 2, the P group is tentatively treated as having a $70 consolidated net operating loss (S's $100 ordinary loss, less P's $30 of ordinary income). The P group is also treated as having no consolidated net capital gain in Year 2, because P's $20 capital gain is reduced by $20 of the consolidated net capital loss carryover from Year 1 under section 1212(a) (the absorption of which is attributed equally to P and S). In addition, of the $70 consolidated net operating loss, $30 is carried back to Year 1 and offsets P's ordinary income in that year, and $40 is carried forward. Consequently, $40 of S's operating loss from Year 2, and $40 of the consolidated net capital loss carryover from Year 1 attributable to S, are limited under this paragraph (b).

(c) Under paragraph (b)(2)(ii) of this section, the limitation under this paragraph (b) does not affect the absorption of any deductions and losses attributable to P, $60 of S's operating loss from Year 2, and $10 of the consolidated net capital loss from Year 1 attributable to S. Consequently, P's basis in S's stock is reduced under § 1.1502–32(b) by $70, from $300 to $230, and P recognizes a $50 gain from the sale of S's stock in Year 2. Thus, the P group is treated as having a $20 unlimited net operating loss that is carried back to Year 1:

Ordinary income:	
P	$30
S (excluding the $40 limited loss)	(60)
Sub Total	$(30)
Consolidated net capital gain:	
P ($20 + $50 from S stock − $50 from Year 1)	$20
S (−$10 from Year 1)	(10)
Sub Total	$10
Consolidated taxable income	$(20)

(d) Under paragraph (b)(2)(ii) of this section, S's $40 ordinary loss from Year 2 that is limited under this paragraph (b) is treated as a separate net operating loss arising in Year 2. Similarly, $40 of the consolidated net capital loss from Year 1 attributable to S is treated as a separate net capital loss carried over from Year 1. Because S ceases to be a member, the $40 net operating loss from Year 2 and the $40 consolidated net capital loss from Year 1 are allocated to S under §§ 1.1502–21 and 1.1502–22, respectively (or § 1.1502-79A, as appropriate) and are carried to S's first separate return year.

Example 3. Allocation of basis adjustments. (a) For Year 1, the P group has consolidated taxable income of $100. At the beginning of Year 2, P has a $40 basis in each of the 10 shares of S's stock. For Year 2, P has an $80 ordinary loss (determined without taking into account P's gain or loss from the disposition of S's stock) and S has an $80 ordinary loss. P sells 2 shares of S's stock for $85 each at the close of Year 2.

(b) Under paragraph (b)(2)(i) of this section, the amount of the limitation on S's loss is determined by tentatively treating the P group as having a $160 consolidated net operating loss for Year 2. Of this amount, $100 is carried back under section 172 and absorbed in Year 1 ($50 attributable to S and $50 attributable to P). Consequently, $30 of S's loss is limited under this paragraph (b).

(c) Under paragraph (b)(2)(ii) of this section, the limitation under this paragraph (b) does not affect the absorption of P's $80 ordinary loss or $50 of S's ordinary loss. Consequently, P's basis in each share of S's stock is reduced from $40 to $35 under § 1.1502–32(b), and P recognizes a $100 gain from the sale of the 2 shares. Thus, the P group is treated as having a $30 unlimited net operating loss:

Ordinary loss:	
P	$(80)
S (excluding the $30 limited loss)	(50)
Sub Total	$(130)
Consolidated net capital gain:	
P	$100
S	0
Sub Total	$100
Unlimited consolidated net operating loss	$(30)

(d) A portion of the $130 of unlimited operating losses for Year 2 is fully absorbed in that year, and a portion is carried back to Year 1. Thus, $61.50 of P's $80 loss ($100 multiplied by $80/$130) and $38.50 of S's $50 unlimited loss ($100 multiplied by $50/$130) are absorbed in Year 2. P's remaining $18.50 of loss and S's remaining $11.50 of loss are not subject to limitation and are carried back and absorbed in Year 1.

(e) Under paragraph (b)(2)(ii) of this section, S's $30 of loss limited under this paragraph (b) is treated as a separate net operating loss.

(3) *Loss dispositions*—(i) *General rule.* The principles of paragraph (b)(2) of this section apply to the extent necessary to carry out the purposes of paragraph (b)(1) of this section if P recognizes a deduction or loss from the disposition of S's stock.

(ii) *Example.* The principles of this paragraph (b)(3) are illustrated by the following example.

Example. (a) P has a $400 basis in S's stock. For Year 1, P has a capital gain of $100 (determined without taking P's gain or loss from the disposition of S's stock into account) and S has both a $60 capital loss and a $200 ordinary loss. P sells S's stock for $140 at the close of Year 1.

(b) Under paragraph (b)(3) of this section, the amount of S's ordinary and capital losses that may offset income and gain is determined by tentatively computing the group's consolidated net operating loss and consolidated net capital loss without taking into account P's loss from the disposition of S's stock. The limitation is necessary to prevent P's loss from the disposition of S's stock from affecting the absorption of S's losses and thereby the adjustments to P's basis in S's stock under §1.1502–32(b) (which would, in turn, affect P's loss).

(c) Under the principles of paragraph (b)(2)(i) of this section, the amount of the limitation on S's loss is determined by tentatively treating the P group as having a $40 consolidated net capital gain and a $200 ordinary loss, which results in a $160 consolidated net operating loss for Year 1, all of which is attributable to S. Thus, $160 of S's ordinary loss is limited under this paragraph (b). *See also* §§1.337(d)–2 and 1.1502–35 for rules relating to basis adjustments and allowance of stock loss on dispositions of stock of a subsidiary member.

(4) *Multiple dispositions*—(i) *Stock of a member.* To the extent income, gain, deduction, or loss from a prior disposition of S's stock is deferred under any rule of law, the limitation under paragraph (b)(2) of this section is determined by treating the year the deferred amount is taken into account as the year of the disposition.

(ii) *Stock of different members.* If S is a higher-tier corporation with respect to another member (T), and all of T's items of income, gain, deduction, and loss (including the absorption of T's deduction or loss) would be fully reflected in P's basis in S's stock under §1.1502–32, the limitation under paragraph (b)(2)(i) of this section with respect to T's deductions and losses is determined without taking into account any income, gain, deduction, or loss from the disposition of the stock of S or T (or of the stock of members owned in the chain connecting S and T). However, this paragraph (b) does not otherwise limit the absorption of one member's deduction or loss with respect to the disposition of another member's stock.

(iii) *Examples.* The principles of this paragraph (b)(4) are illustrated by the following examples.

Example 1. Chain of subsidiaries. (a) P owns all of S's stock with a $500 basis, and S owns all of T's stock with a $500 basis. For Year 1, P has ordinary income of $30, S has no income or loss, and T has an $80 ordinary loss. P sells S's stock for $520 at the close of Year 1.

(b) Under paragraph (b)(4) of this section, to determine the amount of the limitation under paragraph (b) of this section on T's loss, and the effect of the absorption of T's loss on P's basis in S's stock under §1.1502–32(b), P's gain or loss from the disposition of S's stock is not taken into account. The group is tentatively treated as having a consolidated net operating loss of $50 (P's $30 of income minus T's $80 loss). Because only $30 of T's loss offsets income or gain, P's basis in S's stock is reduced under §1.1502–32(b) from $500 to $470 immediately before the disposition of S's stock. Thus, P takes into account a $50 gain from the sale of S's stock.

(c) The facts are the same as in paragraph (a) of this *Example 1,* except that S has a $10 excess loss account in T's stock (rather than a $500 basis). Under paragraph (b)(4) of this section, neither P's gain or loss from the disposition of S's stock nor S's gain or loss from the disposition of T's stock (under §1.1502–19) are taken into account for purposes of the tentative computations and the effect of any absorption under §1.1502–32(b) on P's basis in S's stock and S's excess loss account in T's stock. The group is tentatively treated as having a consolidated net operating loss of $50 (P's $30 of income minus T's $80 loss), and only $30 of T's loss may offset the group's income or gain. Under §1.1502–32(b), the absorption of $30 of T's loss increases S's excess loss account in T's stock to $40 and, under §1.1502–19, the excess loss account is taken into account. Moreover, under §1.1502–32(b), P's basis in S's stock is increased immediately before the sale by $10 (S's $40 gain under §1.1502–19(b) minus T's $30 loss absorbed and tiered up under §1.1502–32(b)), from $500 to $510. Thus, P takes into account a $10 gain from the sale of S's stock, and S takes into account a $40 gain from its excess loss account in T's stock.

Example 2. Brother-sister subsidiaries. (a) P owns all of the stock of S1 and S2, each with a $50 basis. For Year 1, the group has a $100 consolidated net operating loss ($50 of which is attributable to S1, and $50 to S2) determined without taking gain or loss from the disposition of member stock into account. At the close of Year 1, P sells the stock of S1 and S2 for $100 each.

(b) Paragraph (b)(4) of this section does not limit the loss of S1 or S2 with respect to the disposition of stock of the other. Consequently, each subsidiary's loss may offset P's gain from the disposition of the stock of the other subsidiary. Because this absorption results in a $50 reduction in P's basis in the stock of each subsidiary under § 1.1502–32(b), P's aggregate gain from the stock dispositions is increased from $100 to $200, $100 of which is offset by the losses of the subsidiaries.

(5) *Effective date.* This paragraph (b) applies to stock dispositions occurring in consolidated return years beginning on or after January 1, 1995. For prior years, see § 1.1502–11(b) as contained in the 26 CFR part 1 edition revised as of April 1, 1994.

(c) *Elimination of circular stock basis adjustments when there is excluded COD income*—(1) *In general.* If one member (P) disposes of the stock of another member (S) in a year during which any member realizes excluded COD income, this paragraph (c) limits the use of S's deductions and losses in the year of disposition and the carryback of items to prior years, the amount of the attributes of certain members that can be reduced in respect of excluded COD income of certain other members, and the attributes that can be used to offset an excess loss account taken into account by reason of the application of § 1.1502–19(c)(1)(iii)(B). In addition to the purpose set forth in paragraph (b)(1) of this section, the purpose of these limitations is to prevent the reduction of tax attributes in respect of excluded COD income from affecting P's income, gain, or loss on the disposition of S stock (including a disposition of S stock that results from the application of § 1.1502–19(c)(1)(iii)(B)) and, in turn, affecting the attributes available for reduction pursuant to sections 108 and 1017 and § 1.1502–28. See § 1.1502–19(c) for the definition of disposition.

(2) *Computation of tax liability, reduction of attributes, and computation of limits on absorption and reduction of attributes.* If a member realizes excluded COD income in the taxable year during which P disposes of S stock, the steps used to compute tax liability, to effect the reduction of attributes, and to compute the limitations on the absorption and reduction of attributes are as follows. These steps also apply to determine whether and to what extent an excess loss account must be taken into account as a result of the application of § 1.1502–19(b)(1) and (c)(1)(iii)(B).

(i) *Limitation on deductions and losses to offset income or gain.* First, the determination of the extent to which S's deductions and losses for the tax year of the disposition (and its deductions and losses carried over from prior years) may offset income and gain is made pursuant to paragraphs (b)(2) and (3) of this section.

(ii) *Tentative adjustment of stock basis.* Second, § 1.1502–32 is tentatively applied to adjust the basis of the S stock to reflect the amount of S's income and gain included, and unlimited deductions and losses that are absorbed, in the tentative computation of taxable income or loss for the year of the disposition (and any prior years) that is made pursuant to paragraph (b)(2) of this section, but not to reflect the realization of excluded COD income and the reduction of attributes in respect thereof.

(iii) *Tentative computation of stock gain or loss.* Third, in the case of a disposition of S stock that does not result from the application of § 1.1502–19(c)(1)(iii)(B), P's income, gain, or loss from the disposition of S stock is computed. For this purpose, the result of the computation pursuant to paragraph (c)(2)(ii) of this section is treated as the basis of such stock.

(iv) *Tentative computation of tax imposed.* Fourth, the tax imposed by chapter 1 of the Internal Revenue Code for the year of disposition (and any prior years) is tentatively computed. For this purpose, in the case of a disposition of S stock that does not result from the application of § 1.1502–19(c)(1)(iii)(B), the tentative computation of tax imposed takes into account P's income, gain, or loss from the disposition of S stock computed pursuant to paragraph (c)(2)(iii) of this section. The tentative computation of tax imposed is made without regard to whether all or a portion of an excess loss account in a share of S stock is required to be taken into account pursuant to § 1.1502–19(b)(1) and (c)(1)(iii)(B).

(v) *Tentative reduction of attributes.* Fifth, the rules of sections 108 and 1017 and § 1.1502–28 are tentatively applied

to reduce the attributes remaining after the tentative computation of tax imposed pursuant to paragraph (c)(2)(iv) of this section.

(vi) *Actual adjustment of stock basis.* Sixth, §1.1502–32 is applied to reflect the amount of S's income and gain included, and unlimited deductions and losses that are absorbed, in the tentative computation of tax imposed for the year of the disposition (and any prior years) made pursuant to paragraph (c)(2)(iv) of this section, and the excluded COD income applied to reduce attributes and the attributes tentatively reduced in respect of the excluded COD income pursuant to paragraph (c)(2)(v) of this section.

(vii) *Actual computation of stock gain or loss.* Seventh, the group's actual gain or loss on the disposition of S stock (including a disposition that results from the application of §1.1502–19(c)(1)(iii)(B)) is computed. The result of the computation pursuant to paragraph (c)(2)(vi) of this section is treated as the basis of such stock.

(viii) *Actual computation of tax imposed.* Eighth, the tax imposed by chapter 1 of the Internal Revenue Code for the year of the disposition (and any prior years) is computed. The actual tax imposed on the group for the year of the disposition is computed by applying the limitation computed pursuant to paragraph (c)(2)(i) of this section, and by including the gain or loss recognized on the disposition of S stock computed pursuant to paragraph (c)(2)(vii) of this section. However, attributes that were tentatively used in the computation of tax imposed pursuant to paragraph (c)(2)(iv) of this section and attributes that were tentatively reduced pursuant to paragraph (c)(2)(v) of this section cannot offset any excess loss account taken into account as a result of the application of §1.1502–19(b)(1) and (c)(1)(iii)(B).

(ix) *Actual reduction of attributes.* Ninth, the rules of sections 108 and 1017 and §1.1502–28 are actually applied to reduce the attributes remaining after the actual computation of tax imposed pursuant to paragraph (c)(2)(viii) of this section.

(A) *S or a lower-tier corporation realizes excluded COD income.* If S or a lower-tier corporation of S realizes excluded COD income, the aggregate amount of excluded COD income that is applied to reduce attributes attributable to members other than S and any lower-tier corporation of S pursuant to this paragraph (c)(2)(ix) shall not exceed the aggregate amount of excluded COD income that was tentatively applied to reduce attributes attributable to members other than S and any lower-tier corporation of S pursuant to paragraph (c)(2)(v) of this section. The amount of the actual reduction of attributes attributable to S and any lower-tier corporation of S that may be reduced in respect of the excluded COD income of S or a lower-tier corporation of S shall not be so limited.

(B) *A member other than S or a lower-tier corporation realizes excluded COD income.* If a member other than S or a lower-tier corporation of S realizes excluded COD income, the aggregate amount of excluded COD income that is applied to reduce attributes (other than credits) attributable to S and any lower-tier corporation of S pursuant to this paragraph (c)(2)(ix) shall not exceed the aggregate amount of excluded COD income that was tentatively applied to reduce attributes (other than credits) attributable to S and any lower-tier corporation of S pursuant to paragraph (c)(2)(v) of this section. The amount of the actual reduction of attributes attributable to any member other than S and any lower-tier corporation of S that may be reduced in respect of the excluded COD income of S or a lower-tier corporation of S shall not be so limited.

(3) *Special rules.* (i) If the reduction of attributes attributable to a member is prevented as a result of a limitation described in paragraph (c)(2)(ix)(B) of this section, the excluded COD income that would have otherwise been applied to reduce such attributes is applied to reduce the remaining attributes of the same type that are available for reduction under §1.1502–28(a)(4), on a pro rata basis, prior to reducing attributes of a different type. The reduction of such remaining attributes, however, is subject to any applicable limitation described in paragraph (c)(2)(ix)(B) of this section.

(ii) To the extent S's deductions and losses in the year of disposition (or

those of a lower-tier corporation of S) cannot offset income or gain because of the limitation under paragraph (b) of this section or this paragraph (c) and are not reduced pursuant to sections 108 and 1017 and § 1.1502–28, such items are carried to other years under the applicable provisions of the Internal Revenue Code and regulations as if they were the only items incurred by S (or a lower-tier corporation of S) in the year of disposition. For example, to the extent S incurs an operating loss in the year of disposition that is limited and is not reduced pursuant to section 108 and § 1.1502–28, the loss is treated as a separate net operating loss attributable to S arising in that year.

(4) *Definition of lower-tier corporation.* A corporation is a lower-tier corporation of S if all of its items of income, gain, deduction, and loss (including the absorption of deduction or loss and the reduction of attributes other than credits) would be fully reflected in P's basis in S's stock under § 1.1502–32.

(5) *Examples.* For purposes of the examples in this paragraph (c), unless otherwise stated, the tax year of all persons is the calendar year, all persons use the accrual method of accounting, the facts set forth the only corporate activity, all transactions are between unrelated persons, tax liabilities are disregarded, and no election under section 108(b)(5) is made. The principles of this paragraph (c) are illustrated by the following examples:

Example 1. Departing member realizes excluded COD income.

(i) *Facts.* P owns all of S's stock with a $90 basis. For Year 1, P has ordinary income of $30, and S has an $80 ordinary loss and $100 of excluded COD income from the discharge of non-intercompany indebtedness. P sells the S stock for $20 at the close of Year 1. As of the beginning of Year 2, S has Asset A with a basis of $0 and a fair market value of $20.

(ii) *Analysis.* The steps used to compute the tax imposed on the group, to effect the reduction of attributes, and to compute the limitations on the use and reduction of attributes are as follows:

(A) *Computation of limitation on deductions and losses to offset income or gain.* To determine the amount of the limitation under paragraph (c)(2)(i) of this section on S's loss and the effect of the absorption of S's loss on P's basis in S's stock under § 1.1502–32(b), P's gain or loss from the disposition of S's stock is not taken into account. The group is tentatively treated as having a consolidated net operating loss of $50 (P's $30 of income minus S's $80 loss). Thus, $30 of S's loss is unlimited and $50 of S's loss is limited under paragraph (c)(2)(i) of this section. Under the principles of § 1.1502–21(b)(2)(iv), all of the consolidated net operating loss is attributable to S.

(B) *Tentative adjustment of stock basis.* Then, pursuant to paragraph (c)(2)(ii) of this section, § 1.1502–32 is tentatively applied to adjust the basis of S stock. For this purpose, however, adjustments attributable to the excluded COD income and the reduction of attributes in respect thereof are not taken into account. Under § 1.1502–32(b), the absorption of $30 of S's loss decreases P's basis in S's stock by $30 to $60.

(C) *Tentative computation of stock gain or loss.* Then, P's income, gain, or loss from the sale of S stock is computed pursuant to paragraph (c)(2)(iii) of this section using the basis computed in the previous step. Thus, P is treated as recognizing a $40 loss from the sale of S stock.

(D) *Tentative computation of tax imposed.* Pursuant to paragraph (c)(2)(iv) of this section, the tax imposed for the year of disposition is then tentatively computed, taking into account P's $40 loss on the sale of the S stock computed pursuant to paragraph (c)(2)(iii) of this section. The group has a $50 consolidated net operating loss for Year 1 that, under the principles of § 1.1502–21(b)(2)(iv), is wholly attributable to S and a consolidated capital loss of $40 that, under the principles of § 1.1502–21(b)(2)(iv), is wholly attributable to P.

(E) *Tentative reduction of attributes.* Next, pursuant to paragraph (c)(2)(v) of this section, the rules of sections 108 and 1017 and § 1.1502–28 are tentatively applied to reduce attributes remaining after the tentative computation of the tax imposed. Pursuant to § 1.1502–28(a)(2), the tax attributes attributable to S would first be reduced to take into account its $100 of excluded COD income. Accordingly, the consolidated net operating loss for Year 1 would be reduced by $50, the portion of that consolidated net operating loss attributable to S under the principles of § 1.1502–21(b)(2)(iv), to $0. Then, pursuant to § 1.1502–28(a)(4), S's remaining $50 of excluded COD income would reduce the consolidated capital loss attributable to P of $40 by $40 to $0. The remaining $10 of excluded COD income would have no effect.

(F) *Actual adjustment of stock basis.* Pursuant to paragraph (c)(2)(vi) of this section, § 1.1502–32 is applied to reflect the amount of S's income and gain included, and unlimited deductions and losses that are absorbed, in the tentative computation of the tax imposed for the year of the disposition and the excluded COD income tentatively applied to reduce attributes and the attributes reduced in respect of the excluded COD income pursuant to the previous step. Under § 1.1502–32(b),

the absorption of $30 of S's loss, the application of $90 of S's excluded COD income to reduce attributes of P and S, and the reduction of the $50 loss attributable to S in respect of the excluded COD income results in a positive adjustment of $10 to P's basis in the S stock. P's basis in the S stock, therefore, is $100.

(G) *Actual computation of stock gain or loss.* Pursuant to paragraph (c)(2)(vii) of this section, P's actual gain or loss on the sale of the S stock is computed using the basis computed in the previous step. Accordingly, P recognizes an $80 loss on the disposition of the S stock.

(H) *Actual computation of tax imposed.* Pursuant to paragraph (c)(2)(viii) of this section, the tax imposed is computed by taking into account P's $80 loss from the sale of S stock. Before the application of §1.1502–28, therefore, the group has a consolidated net operating loss of $50 that is wholly attributable to S under the principles of §1.1502–21(b)(2)(iv), and a consolidated capital loss of $80 that is wholly attributable to P under the principles of §1.1502–21(b)(2)(iv).

(I) *Actual reduction of attributes.* Pursuant to paragraph (c)(2)(ix) of this section, sections 108 and 1017 and §1.1502–28 are then actually applied to reduce attributes remaining after the actual computation of the tax imposed. Pursuant to §1.1502–28(a)(2), the tax attributes attributable to S must first be reduced to take into account its $100 of excluded COD income. Accordingly, the consolidated net operating loss for Year 1 is reduced by $50, the portion of that consolidated net operating loss attributable to S under the principles of §1.1502–21(b)(2)(iv), to $0. Then, pursuant to §1.1502–28(a)(4), S's remaining $50 of excluded COD income reduces consolidated tax attributes. In particular, without regard to the limitation imposed by paragraph (c)(2)(ix)(A) of this section, the $80 consolidated capital loss, which under the principles of §1.1502–21(b)(2)(iv) is attributable to P, would be reduced by $50 from $80 to $30. However, the limitation imposed by paragraph (c)(2)(ix)(A) of this section prevents the reduction of the consolidated capital loss attributable to P by more than $40. Therefore, the consolidated capital loss attributable to P is reduced by only $40 in respect of S's excluded COD income. The remaining $10 of excluded COD income has no effect.

Example 2. Member other than departing member realizes excluded COD income.

(i) *Facts.* P owns all of S1's and S2's stock. P's basis in S2's stock is $600. For Year 1, P has ordinary income of $30, S1 has a $100 ordinary loss and $100 of excluded COD income from the discharge of non-intercompany indebtedness, and S2 has $200 of ordinary loss. P sells the S2 stock for $600 at the close of Year 1. As of the beginning of Year 2, S1 has Asset A with a basis of $0 and a fair market value of $10.

(ii) *Analysis.* The steps used to compute the tax imposed on the group, to effect the reduction of attributes, and to compute the limitations on the use and reduction of attributes are as follows:

(A) *Computation of limitation on deductions and losses to offset income or gain.* To determine the amount of the limitation under paragraph (c)(2)(i) of this section on S2's loss and the effect of the absorption of S2's loss on P's basis in S2's stock under §1.1502–32(b), P's gain or loss from the sale of S2's stock is not taken into account. The group is tentatively treated as having a consolidated net operating loss of $270 (P's $30 of income minus S1's $100 loss and S2's $200 loss). Consequently, $20 of S2's loss from Year 1 is unlimited and $180 of S2's loss from Year 1 is limited under paragraph (c)(2)(i) of this section. Under the principles of §1.1502–21(b)(2)(iv), $90 of the consolidated net operating loss is attributable to S1 and $180 of the consolidated net operating loss is attributable to S2.

(B) *Tentative adjustment of stock basis.* Then, pursuant to paragraph (c)(2)(ii) of this section, §1.1502–32 is tentatively applied to adjust the basis of S2's stock. For this purpose, however, adjustments to the basis of S2's stock attributable to the reduction of attributes in respect of S1's excluded COD income are not taken into account. Under §1.1502–32(b), the absorption of $20 of S2's loss decreases P's basis in S2's stock by $20 to $580.

(C) *Tentative computation of stock gain or loss.* Then, P's income, gain, or loss from the disposition of S2 stock is computed pursuant to paragraph (c)(2)(iii) of this section using the basis computed in the previous step. Thus, P is treated as recognizing a $20 gain from the sale of the S2 stock.

(D) *Tentative computation of tax imposed.* Pursuant to paragraph (c)(2)(iv) of this section, the tax imposed for the year of disposition is then tentatively computed, taking into account P's $20 gain from the sale of S2 stock computed pursuant to paragraph (c)(2)(iii) of this section. Although S2's limited loss cannot be used to offset P's $20 gain from the sale of S2's stock under the rules of this section, S1's loss will offset that gain. Therefore, the group is tentatively treated as having a consolidated net operating loss of $250, $70 of which is attributable to S1 and $180 of which is attributable to S2 under the principles of §1.1502–21(b)(2)(iv).

(E) *Tentative reduction of attributes.* Next, pursuant to paragraph (c)(2)(v) of this section, the rules of sections 108 and 1017 and §1.1502–28 are tentatively applied to reduce attributes remaining after the tentative computation of the tax imposed. Pursuant to §1.1502–28(a)(2), the tax attributes attributable to S1 would first be reduced to take

into account its $100 of excluded COD income. Accordingly, the consolidated net operating loss for Year 1 would be reduced by $70, the portion of that consolidated net operating loss attributable to S1 under the principles of § 1.1502–21(b)(2)(iv), to $0. Then, pursuant to § 1.1502–28(a)(4), S1's remaining $30 of excluded COD income would reduce the consolidated net operating loss for Year 1 attributable to S2 of $180 by $30 to $150.

(F) *Actual adjustment of stock basis.* Pursuant to paragraph (c)(2)(vi) of this section, § 1.1502–32 is applied to reflect the amount of S2's income and gain included, and unlimited deductions and losses that are absorbed, in the tentative computation of the tax imposed for the year of the disposition and the excluded COD income tentatively applied to reduce attributes and the attributes reduced in respect of the excluded COD income pursuant to the previous step. Under § 1.1502–32(b), the absorption of $20 of S2's loss to offset a portion of P's income and the application of $30 of S1's excluded COD income to reduce attributes attributable to S2 results in a negative adjustment of $50 to P's basis in the S2 stock. P's basis in the S2 stock, therefore, is $550.

(G) *Actual computation of stock gain or loss.* Pursuant to paragraph (c)(2)(vii) of this section, P's actual gain or loss on the sale of the S2 stock is computed using the basis computed in the previous step. Therefore, P recognizes a $50 gain on the disposition of the S2 stock.

(H) *Actual computation of tax imposed.* Pursuant to paragraph (c)(2)(viii) of this section, the tax imposed is computed by taking into account P's $50 gain from the disposition of the S2 stock. Before the application of § 1.1502–28, therefore, the group has a consolidated net operating loss of $220, $40 of which is attributable to S1 and $180 of which is attributable to S2 under the principles of § 1.1502–21(b)(2)(iv).

(I) *Actual reduction of attributes.* Pursuant to paragraph (c)(2)(ix) of this section, sections 108 and 1017 and § 1.1502–28 are then actually applied to reduce attributes remaining after the actual computation of the tax imposed. Pursuant to § 1.1502–28(a)(2), the tax attributes attributable to S1 must first be reduced to take into account its $100 of excluded COD income. Accordingly, the consolidated net operating loss for Year 1 is reduced by $40, the portion of that consolidated net operating loss attributable to S1 under the principles of § 1.1502–21(b)(2)(iv), to $0. Then, pursuant to § 1.1502–28(a)(4), without regard to the limitation imposed by paragraph (c)(2)(ix)(B) of this section, S1's remaining $60 of excluded COD income would reduce S2's net operating loss of $180 to $120. However, the limitation imposed by paragraph (c)(2)(ix)(B) of this section prevents the reduction of S2's loss by more than $30. Therefore, S2's loss of $180 is reduced by $30 to $150 in respect of S1's excluded COD income. The remaining $30 of excluded COD income has no effect.

Example 3. Lower-tier corporation of departing member realizes excluded COD income. (i) *Facts.* P owns all of S1's stock, S2's stock, and S3's stock. S1 owns all of S4's stock. P's basis in S1's stock is $50 and S1's basis in S4's stock is $50. For Year 1, P has $50 of ordinary loss, S1 has $100 of ordinary loss, S2 has $150 of ordinary loss, S3 has $50 of ordinary loss, and S4 has $50 of ordinary loss and $80 of excluded COD income from the discharge of non-intercompany indebtedness. P sells the S1 stock for $100 at the close of Year 1. As of the beginning of Year 2, S4 has Asset A with a fair market value of $10. After the computation of tax imposed for Year 1 and before the application of sections 108 and 1017 and § 1.1502–28, Asset A has a basis of $0.

(ii) *Analysis.* The steps used to compute the tax imposed on the group, to effect the reduction of attributes, and to compute the limitations on the use and reduction of attributes are as follows:

(A) *Computation of limitation on deductions and losses to offset income or gain.* To determine the amount of the limitation under paragraph (c)(2)(i) of this section on S1's and S4's losses and the effect of the absorption of S1's and S4's losses on P's basis in S1's stock under § 1.1502–32(b), P's gain or loss from the sale of S1's stock is not taken into account. The group is tentatively treated as having a consolidated net operating loss of $400. Consequently, $100 of S1's loss and $50 of S4's loss is limited under paragraph (c)(2)(i) of this section.

(B) *Tentative adjustment of stock basis.* Then, pursuant to paragraph (c)(2)(ii) of this section, § 1.1502–32 is tentatively applied to adjust the basis of S1's stock. For this purpose, adjustments to the basis of S1's stock attributable to S4's realization of excluded COD income and the reduction of attributes in respect of such excluded COD income are not taken into account. There is no adjustment under § 1.1502–32 to the basis of the S1 stock. Therefore, P's basis in the S1 stock for this purpose is $50.

(C) *Tentative computation of stock gain or loss.* Then, P's income, gain, or loss from the sale of S1 stock is computed pursuant to paragraph (c)(2)(iii) of this section using the basis computed in the previous step. Thus, P is treated as recognizing a $50 gain from the sale of the S1 stock.

(D) *Tentative computation of tax imposed.* Pursuant to paragraph (c)(2)(iv) of this section, the tax imposed for the year of disposition is then tentatively computed, taking into account P's $50 gain from the sale of the S1 stock computed pursuant to paragraph (c)(2)(iii) of this section. Although S1's and S4's limited losses cannot be used to offset P's $50 gain from the sale of S1's stock under

the rules of this section, $10 of P's loss, $30 of S2's loss, and $10 of S3's loss will offset that gain. Therefore, the group is tentatively treated as having a consolidated net operating loss of $350, $40 of which is attributable to P, $100 of which is attributable to S1, $120 of which is attributable to S2, $40 of which is attributable to S3, and $50 of which is attributable to S4 under the principles of § 1.1502–21(b)(2)(iv).

(E) *Tentative reduction of attributes.* Next, pursuant to paragraph (c)(2)(v) of this section, the rules of sections 108 and 1017 and § 1.1502–28 are tentatively applied to reduce attributes remaining after the tentative computation of the tax imposed. Pursuant to § 1.1502–28(a)(2), the tax attributes attributable to S4 would first be reduced to take into account its $80 of excluded COD income. Accordingly, the consolidated net operating loss for Year 1 would be reduced by $50, the portion of the consolidated net operating loss attributable to S4 under the principles of § 1.1502–21(b)(2)(iv), to $300. Then, pursuant to § 1.1502–28(a)(4), S4's remaining $30 of excluded COD income would reduce the consolidated net operating loss for Year 1 that is attributable to other members. Therefore, the consolidated net operating loss for Year 1 would be reduced by $30. Of that amount, $4 is attributable to P, $10 is attributable to S1, $12 is attributable to S2, and $4 is attributable to S3.

(F) *Actual adjustment of stock basis.* Pursuant to paragraph (c)(2)(vi) of this section, § 1.1502–32 is applied to reflect the amount of S1's and S4's income and gain included, and unlimited deductions and losses that are absorbed, in the tentative computation of tax imposed for the year of the disposition and the excluded COD income tentatively applied to reduce attributes and the attributes reduced in respect of the excluded COD income pursuant to the previous step. Under § 1.1502–32(b), the application of $80 of S4's excluded COD income to reduce attributes, and the reduction of S4's loss in the amount of $50 and S1's loss in the amount of $10 in respect of the excluded COD income results in a positive adjustment of $20 to P's basis in the S1 stock. Accordingly, P's basis in S1 stock is $70.

(G) *Actual computation of stock gain or loss.* Pursuant to paragraph (c)(2)(vii) of this section, P's actual gain or loss on the sale of the S1 stock is computed using the basis computed in the previous step. Accordingly, P recognizes a $30 gain on the disposition of the S1 stock.

(H) *Actual computation of tax imposed.* Pursuant to paragraph (c)(2)(viii) of this section, the tax imposed is computed by taking into account P's $30 gain from the sale of S1 stock. Before the application of § 1.1502–28, therefore, the group has a consolidated net operating loss of $370, $44 of which is attributable to P, $100 of which is attributable to S1, $132 of which is attributable to S2, $44 of which is attributable to S3, and $50 of which is attributable to S4.

(I) *Actual reduction of attributes.* Pursuant to paragraph (c)(2)(ix) of this section, sections 108 and 1017 and § 1.1502–28 are then actually applied to reduce attributes remaining after the actual computation of the tax imposed. Pursuant to § 1.1502–28(a)(2), the tax attributes attributable to S4 must first be reduced to take into account its $80 of excluded COD income. Accordingly, the consolidated net operating loss for Year 1 is reduced by $50, the portion of that consolidated net operating loss attributable to S4 under the principles of § 1.1502–21(b)(2)(iv), to $320. Then, pursuant to § 1.1502–28(a)(4), without regard to the limitation imposed by paragraph (c)(2)(ix)(A) of this section, S4's remaining $30 of excluded COD income would reduce the consolidated net operating loss for Year 1 by $30 ($4.12 of the consolidated net operating loss attributable to P, $9.38 of the consolidated net operating loss attributable to S1, $12.38 of the consolidated net operating loss attributable to S2, and $4.12 of the consolidated net operating loss attributable to S3) to $290. However, the limitation imposed by paragraph (c)(2)(ix)(A) of this section prevents the reduction of the consolidated net operating loss attributable to P, S2, and S3 by more than $4, $12, and $4 respectively. The $.62 of excluded COD income that would have otherwise reduced the consolidated net operating loss attributable to P, S2, and S3 is applied to reduce the consolidated net operating loss attributable to S1. Therefore, S1 carries forward $90 of loss.

Example 4. Excess loss account taken into account. (i) *Facts.* P is the common parent of a consolidated group. On Day 1 of Year 2, P acquired all of the stock of S1. As of the beginning of Year 2, S1 had a $30 net operating loss carryover from Year 1, a separate return limitation year. A limitation under § 1.1502–21(c) applies to the use of that loss by the P group. For Years 1 and 2, the P group had no consolidated taxable income or loss. On Day 1 of Year 3, S1 acquired all of the stock of S2 for $10. In Year 3, P had ordinary income of $10, S1 had ordinary income of $25, and S2 had an ordinary loss of $50. In addition, in Year 3, S2 realized $20 of excluded COD income from the discharge of non-intercompany indebtedness. After the discharge of this indebtedness, S2 had no liabilities. As of the beginning of Year 4, S2 had Asset A with a fair market value of $10. After the computation of tax imposed for Year 3 and before the application of sections 108 and 1017 and § 1.1502–28, Asset A has a basis of $0. S2 had no taxable income (or loss) for Year 1 and Year 2.

(ii) *Analysis.* The steps used to compute the tax imposed on the group, to effect the reduction of attributes, and to compute the

limitations on the use and reduction of attributes are as follows:

(A) *Computation of limitation on deductions and losses to offset income or gain, tentative basis adjustments, tentative computation of stock gain or loss.* Because it is not initially apparent that there has been a disposition of stock, paragraph (c)(2)(i) of this section does not limit the use of deductions to offset income or gain, no adjustments to the basis are required pursuant to paragraph (c)(2)(ii) of this section, and no stock gain or loss is computed pursuant to paragraph (c)(2)(iii) of this section or taken into account in the tentative computation of tax imposed pursuant to paragraph (c)(2)(iv) of this section.

(B) *Tentative computation of tax imposed.* Pursuant to paragraph (c)(2)(iv) of this section, the tax imposed for Year 3 is tentatively computed. For Year 3, the P group has a consolidated taxable loss of $15, all of which is attributable to S2 under the principles of §1.1502–21(b)(2)(iv).

(C) *Tentative reduction of attributes.* Next, pursuant to paragraph (c)(2)(v) of this section, the rules of sections 108 and 1017 and §1.1502–28 are tentatively applied to reduce attributes remaining after the tentative computation of tax imposed. Pursuant to §1.1502–28(a)(2), the tax attributes attributable to S2 would first be reduced to take into account its $20 of excluded COD income. Accordingly, the consolidated net operating loss for Year 3 is reduced by $15, the portion of that consolidated net operating loss attributable to S2 under the principles of §1.1502–21(b)(2)(iv), to $0. The remaining $5 of excluded COD income is not applied to reduce attributes as there are no remaining attributes that are subject to reduction.

(D) *Actual adjustment of stock basis.* Pursuant to paragraph (c)(2)(vi) of this section, §1.1502–32 is applied to reflect the amount of S2's income and gain included, and unlimited deductions and losses that are absorbed, in the tentative computation of tax imposed for the year of the disposition and the excluded COD income tentatively applied to reduce attributes and the attributes reduced in respect of the excluded COD income pursuant to the previous step. Under §1.1502–32, the absorption of $35 of S2's loss, the application of $15 in respect of S2's excluded COD income to reduce attributes, and the reduction of $15 in respect of the loss attributable to S2 reduced in respect of the excluded COD income results in a negative adjustment of $35 to the basis of the S2 stock. Therefore, S1 has an excess loss account of $25 in the S2 stock.

(E) *Actual computation of stock gain or loss.* Pursuant to paragraph (c)(2)(vii) of this section, S1's actual gain or loss, if any, on the S2 stock is computed. Because S2 realized $5 of excluded COD income that was not applied to reduce attributes, pursuant to §1.1502–19(b)(1) and (c)(1)(iii)(B), S1 is required to take into account $5 of its excess loss account in the S2 stock.

(F) *Actual computation of tax imposed.* Pursuant to paragraph (c)(2)(viii) of this section, the tax imposed is computed by taking into account the $5 of the excess loss account in the S2 stock required to be taken into account. See §1.1502–28(b)(6) (requiring an excess loss account that is required to be taken into account as a result of the application of §1.1502–19(c)(1)(iii)(B) to be included in the group's tax return for the year that includes the date of the debt discharge). However, pursuant to paragraph (c)(2)(viii) of this section, such amount may not be offset by any of the consolidated net operating loss attributable to S2. It may, however, subject to applicable limitations, be offset by the separate net operating loss of S1 from Year 1.

(G) *Actual reduction of attributes.* Pursuant to paragraph (c)(2)(ix) of this section, sections 108 and 1017 and §1.1502–28 are then actually applied to reduce attributes remaining after the actual computation of the tax imposed. Attributes will be actually reduced in the same way that they were tentatively reduced.

(6) *Additional rules for multiple dispositions.* [Reserved]

(7) *Effective date.* This paragraph (c) applies to dispositions of subsidiary stock that occur after March 22, 2005. Taxpayers may apply §1.1502–11(c) of REG–167265–03 (2004–15 IRB 730) (see §601.601(d)(2) of this chapter) in whole, but not in part, to any disposition of subsidiary stock that occurs on or before March 22, 2005, if a member of the group realized excluded COD income after August 29, 2003, in the taxable year that includes the date of the disposition of such subsidiary stock.

(d) *Disallowance of loss attributable to pre-1966 distributions.* No loss shall be allowed upon the sale or other disposition of stock, bonds, or other obligations of a member or former member to the extent that such loss is attributable to a distribution made in an affiliated year beginning before January

1, 1966, out of earnings and profits accumulated before the distributing corporation became a member.

[T.D. 7246, 38 FR 759, Jan. 4, 1973, as amended by T.D. 7728, 45 FR 72650, Nov. 3, 1980; T.D. 8560, 59 FR 41675, Aug. 15, 1994; T.D. 8677, 61 FR 33323, 33326, June 27, 1996; T.D. 8560, 62 FR 12097, Mar. 14, 1997; T.D. 8823, 64 FR 36099, July 2, 1999; T.D. 9048, 68 FR 12290, Mar. 14, 2003; T.D. 9192, 70 FR 14399, Mar. 22, 2005; T.D. 9187, 70 FR 10326, Mar. 3, 2005; T.D. 9192, 70 FR 20049, Apr. 18, 2005; T.D. 9254, 71 FR 13018, Mar. 14, 2006]

COMPUTATION OF SEPARATE TAXABLE INCOME

§ 1.1502–12 Separate taxable income.

The separate taxable income of a member (including a case in which deductions exceed gross income) is computed in accordance with the provisions of the Code covering the determination of taxable income of separate corporations, subject to the following modifications:

(a) Transactions between members and transactions with respect to stock, bonds, or other obligations of members shall be reflected according to the provisions of § 1.1502–13;

(b) Any deduction which is disallowed under §§ 1.1502–15A or 1.1502–15 shall be taken into account as provided in those sections;

(c) The limitation on deductions provided in section 615(c) or section 617(h) shall be taken into account as provided in § 1.1502–16;

(d) The method of accounting under which such computation is made and the adjustments to be made because of any change in method of accounting shall be determined under § 1.1502–17;

(e) Inventory adjustments shall be made as provided in § 1.1502–18;

(f) Any amount included in income under § 1.1502–19 shall be taken into account;

(g) In the computation of the deduction under section 167, property shall not lose its character as new property as a result of a transfer from one member to another member during a consolidated return year if:

(1) The transfer occurs on or before January 4, 1973, or

(2) The transfer occurs after January 4, 1973, and the transfer is an intercompany transaction as defined in § 1.1502–13 or the basis of the property in the hands of the transferee is determined (in whole or in part) by reference to its basis in the hands of the transferor;

(h) No net operating loss deduction shall be taken into account;

(i) [Reserved]

(j) No capital gains or losses shall be taken into account;

(k) No gains and losses subject to section 1231 shall be taken into account;

(l) No deduction under section 170 with respect to charitable contributions shall be taken into account;

(m) No deduction under section 922 (relating to the deduction for Western Hemisphere trade corporations) shall be taken into account;

(n) No deductions under section 243(a)(1), 244(a), 245, or 247 (relating to deductions with respect to dividends received and dividends paid) shall be taken into account;

(o) Basis shall be determined under §§ 1.1502–31 and 1.1502–32, and earnings and profits shall be determined under § 1.1502–33; and

(p) The limitation on deductions provided in section 613A shall be taken into account for each member's oil and gas properties as provided in § 1.1502–44.

(q) A thrift institution's deduction under section 593(b)(2) (relating to the addition to the reserve for bad debts of a thrift institution under the percentage of taxable income method) shall be determined under § 1.1502–42.

(r) *See* §§ 1.337(d)–2 and 1.1502–35(f) for rules relating to basis adjustments and allowance of stock loss on dispositions of stock of a subsidiary member.

(Secs. 1502 and 7805 of the Internal Revenue Code of 1954 (68A Stat. 637; 917; 26 U.S.C. 1502, 7805))

[T.D. 6894, 31 FR 11794, Sept. 8, 1966, as amended by T.D. 7191, 37 FR 12949, June 30, 1972; T.D. 7246, 38 FR 760, Jan. 4, 1973; T.D. 7725, 45 FR 65561, Oct. 3, 1980; T.D. 7876, 48 FR 11258, Mar. 17, 1983; T.D. 8294, 55 FR 9434, Mar. 14, 1990; T.D. 8319, 55 FR 49038, Nov. 26, 1990; T.D. 8364, 56 FR 47401, Sept. 19, 1991; T.D. 8597, 60 FR 36679, July 18, 1995; T.D. 8677, 61 FR 33323, June 27, 1996; T.D. 8823, 64 FR 36099, July 2, 1999; T.D. 9048, Mar. 14, 2003; T.D. 9254, 71 FR 13018, Mar. 14, 2006]

§ 1.1502–13 Intercompany transactions.

(a) *In general*—(1) *Purpose.* This section provides rules for taking into account items of income, gain, deduction,

and loss of members from intercompany transactions. The purpose of this section is to provide rules to clearly reflect the taxable income (and tax liability) of the group as a whole by preventing intercompany transactions from creating, accelerating, avoiding, or deferring consolidated taxable income (or consolidated tax liability).

(2) *Separate entity and single entity treatment.* Under this section, the selling member (S) and the buying member (B) are treated as separate entities for some purposes but as divisions of a single corporation for other purposes. The *amount* and *location* of S's intercompany items and B's corresponding items are determined on a separate entity basis (separate entity treatment). For example, S determines its gain or loss from a sale of property to B on a separate entity basis, and B has a cost basis in the property. The *timing,* and the *character, source,* and other *attributes* of the intercompany items and corresponding items, although initially determined on a separate entity basis, are redetermined under this section to produce the effect of transactions between divisions of a single corporation (single entity treatment). For example, if S sells land to B at a gain and B sells the land to a nonmember, S does not take its gain into account until B's sale to the nonmember.

(3) *Timing rules as a method of accounting*—(i) *In general.* The timing rules of this section are a method of accounting for intercompany transactions, to be applied by each member in addition to the member's other methods of accounting. *See* § 1.1502–17 and, with regard to consolidated return years beginning on or after November 7, 2001, § 1.446–1(c)(2)(iii). To the extent the timing rules of this section are inconsistent with a member's otherwise applicable methods of accounting, the timing rules of this section control. For example, if S sells property to B in exchange for B's note, the timing rules of this section apply instead of the installment sale rules of section 453. S's or B's application of the timing rules of this section to an intercompany transaction clearly reflects income only if the effect of that transaction as a whole (including, for example, related costs and expenses) on consolidated taxable income is clearly reflected.

(ii) *Automatic consent for joining and departing members*—(A) *Consent granted.* Section 446(e) consent is granted under this section to the extent a change in method of accounting is necessary solely by reason of the timing rules of this section—

(*1*) For each member, with respect to its intercompany transactions, in the first consolidated return year which follows a separate return year and in which the member engages in an intercompany transaction; and

(*2*) For each former member, with respect to its transactions with members that would otherwise be intercompany transactions if the former member were still a member, in the first separate return year in which the former member engages in such a transaction.

(B) *Cut-off basis.* Any change in method of accounting described in paragraph (a)(3)(ii)(A) of this section is to be effected on a cut-off basis for transactions entered into on or after the first day of the year for which consent is granted under paragraph (a)(3)(ii)(A) of this section.

(4) *Other law.* The rules of this section apply in addition to other applicable law (including nonstatutory authorities). For example, this section applies in addition to sections 267(f) (additional rules for certain losses), 269 (acquisitions to evade or avoid income tax), and 482 (allocations among commonly controlled taxpayers). Thus, an item taken into account under this section can be deferred, disallowed, or eliminated under other applicable law, for example, section 1091 (losses from wash sales).

(5) *References.* References in other sections to this section include, as appropriate, references to prior law. For effective dates and prior law see paragraph (l) of this section.

(6) *Overview*—(i) *In general.* The principal rules of this section that implement single entity treatment are the matching rule and the acceleration rule of paragraphs (c) and (d) of this section. Under the matching rule, S and B are generally treated as divisions of a single corporation for purposes of taking into account their items from

intercompany transactions. The acceleration rule provides additional rules for taking the items into account if the effect of treating S and B as divisions cannot be achieved (for example, if S or B becomes a nonmember). Paragraph (b) of this section provides definitions. Paragraph (e) of this section provides simplifying rules for certain transactions. Paragraphs (f) and (g) of this section provide additional rules for stock and obligations of members. Paragraphs (h) and (j) of this section provide anti-avoidance rules and miscellaneous operating rules.

(ii) *Table of examples.* Set forth below is a table of the examples contained in this section.

Matching rule. (§ 1.1502–13(c)(7)(ii))

Example 1. Intercompany sale of land.
Example 2. Dealer activities.
Example 3. Intercompany section 351 transfer.
Example 4. Depreciable property.
Example 5. Intercompany sale followed by installment sale.
Example 6. Intercompany sale of installment obligation.
Example 7. Performance of services.
Example 8. Rental of property.
Example 9. Intercompany sale of a partnership interest.
Example 10. Net operating losses subject to section 382 or the SRLY rules.
Example 11. Section 475.
Example 12. Section 1092.
Example 13. Manufacturer incentive payments.
Example 14. Source of income under section 863.
Example 15. Section 1248.

Acceleration rule. (§ 1.1502–13(d)(3))

Example 1. Becoming a nonmember—timing.
Example 2. Becoming a nonmember—attributes.
Example 3. Selling member's disposition of installment note.
Example 4. Cancellation of debt and attribute reduction under section 108(b).
Example 5. Section 481.

Simplifying rules—inventory. (§ 1.1502–13(e)(1)(v))

Example 1. Increment averaging method.
Example 2. Increment valuation method.
Example 3. Other reasonable inventory methods.

Stock of members. (§ 1.1502–13(f)(7))

Example 1. Dividend exclusion and property distribution.
Example 2. Excess loss accounts.
Example 3. Intercompany reorganization.
Example 4. Stock redemptions and distributions.
Example 5. Intercompany stock sale followed by section 332 liquidation.
Example 6. Intercompany stock sale followed by section 355 distribution.

Obligations of members. (§ 1.1502–13(g)(5))

Example 1. Interest on intercompany debt.
Example 2. Intercompany debt becomes nonintercompany debt.
Example 3. Loss or bad debt deduction with respect to intercompany debt.
Example 4. Nonintercompany debt becomes intercompany debt.
Example 5. Notional principal contracts.

Anti-avoidance rules. (§ 1.1502–13(h)(2))

Example 1. Sale of a partnership interest.
Example 2. Transitory status as an intercompany obligation.
Example 3. Corporate mixing bowl.
Example 4. Partnership mixing bowl.
Example 5. Sale and leaseback.

Miscellaneous operating rules. (§ 1.1502–13(j)(9))

Example 1. Intercompany sale followed by section 351 transfer to member.
Example 2. Intercompany sale of member stock followed by recapitalization.
Example 3. Back-to-back intercompany transactions—matching.
Example 4. Back-to-back intercompany transactions—acceleration.
Example 5. Successor group.
Example 6. Liquidation—80% distributee.
Example 7. Liquidation—no 80% distributee.

(b) *Definitions.* For purposes of this section—

(1) *Intercompany transactions*—(i) *In general.* An intercompany transaction is a transaction between corporations that are members of the same consolidated group immediately after the transaction. S is the member transferring property or providing services, and B is the member receiving the property or services. Intercompany transactions include—

(A) S's sale of property (or other transfer, such as an exchange or contribution) to B, whether or not gain or loss is recognized;

(B) S's performance of services for B, and B's payment or accrual of its expenditure for S's performance;

(C) S's licensing of technology, rental of property, or loan of money to B, and B's payment or accrual of its expenditure; and

(D) S's distribution to B with respect to S stock.

(ii) *Time of transaction.* If a transaction occurs in part while S and B are members and in part while they are not members, the transaction is treated as occurring when performance by either S or B takes place, or when payment for performance would be taken into account under the rules of this section if it were an intercompany transaction, whichever is earliest. Appropriate adjustments must be made in such cases by, for example, dividing the transaction into two separate transactions reflecting the extent to which S or B has performed.

(iii) *Separate transactions.* Except as otherwise provided in this section, each transaction is analyzed separately. For example, if S simultaneously sells two properties to B, one at a gain and the other at a loss, each property is treated as sold in a separate transaction. Thus, the gain and loss cannot be offset or netted against each other for purposes of this section. Similarly, each payment or accrual of interest on a loan is a separate transaction. In addition, an accrual of premium is treated as a separate transaction, or as an offset to interest that is not a separate transaction, to the extent required under separate entity treatment. If two members exchange property, each member is S with respect to the property it transfers and B with respect to the property it receives. If two members enter into a notional principal contract, each payment under the contract is a separate transaction and the member making the payment is B with respect to that payment and the member receiving the payment is S. See paragraph (j)(4) of this section for rules aggregating certain transactions.

(2) *Intercompany items*—(i) *In general.* S's income, gain, deduction, and loss from an intercompany transaction are its intercompany items. For example, S's gain from the sale of property to B is intercompany gain. An item is an intercompany item whether it is directly or indirectly from an intercompany transaction.

(ii) *Related costs or expenses.* S's costs or expenses related to an intercompany transaction are included in determining its intercompany items. For example, if S sells inventory to B, S's direct and indirect costs properly includible under section 263A are included in determining its intercompany income. Similarly, related costs or expenses that are not capitalized under S's separate entity method of accounting are included in determining its intercompany items. For example, deductions for employee wages, in addition to other related costs, are included in determining S's intercompany items from performing services for B, and depreciation deductions are included in determining S's intercompany items from renting property to B.

(iii) *Amounts not yet recognized or incurred.* S's intercompany items include amounts from an intercompany transaction that are not yet taken into account under its separate entity method of accounting. For example, if S is a cash method taxpayer, S's intercompany income might be taken into account under this section even if the cash is not yet received. Similarly, an amount reflected in basis (or an amount equivalent to basis) under S's separate entity method of accounting that is a substitute for income, gain, deduction or loss from an intercompany transaction is an intercompany item.

(3) *Corresponding items*—(i) *In general.* B's income, gain, deduction, and loss from an intercompany transaction, or from property acquired in an intercompany transaction, are its corresponding items. For example, if B pays rent to S, B's deduction for the rent is a corresponding deduction. If B buys property from S and sells it to a nonmember, B's gain or loss from the sale to the nonmember is a corresponding gain or loss; alternatively, if B recovers the cost of the property through depreciation, B's depreciation deductions are corresponding deductions. An item is a corresponding item whether it is directly or indirectly from an intercompany transaction (or from property acquired in an intercompany transaction).

(ii) *Disallowed or eliminated amounts.* B's corresponding items include amounts that are permanently disallowed or permanently eliminated, whether directly or indirectly. Thus, corresponding items include amounts

disallowed under section 265 (expenses relating to tax-exempt income), and amounts not recognized under section 311(a) (nonrecognition of loss on distributions), section 332 (nonrecognition on liquidating distributions), or section 355(c) (certain distributions of stock of a subsidiary). On the other hand, an amount is not permanently disallowed or permanently eliminated (and therefore is not a corresponding item) to the extent it is not recognized in a transaction in which B receives a successor asset within the meaning of paragraph (j)(1) of this section. For example, B's corresponding items do not include amounts not recognized from a transaction with a nonmember to which section 1031 applies or from another transaction in which B receives exchanged basis property.

(4) *Recomputed corresponding items.* The recomputed corresponding item is the corresponding item that B would take into account if S and B were divisions of a single corporation and the intercompany transaction were between those divisions. For example, if S sells property with a $70 basis to B for $100, and B later sells the property to a nonmember for $90, B's corresponding item is its $10 loss, and the recomputed corresponding item is $20 of gain (determined by comparing the $90 sales price with the $70 basis the property would have if S and B were divisions of a single corporation). Although neither S nor B actually takes the recomputed corresponding item into account, it is computed as if B did take it into account (based on reasonable and consistently applied assumptions, including any provision of the Internal Revenue Code or regulations that would affect its timing or attributes).

(5) *Treatment as a separate entity.* Treatment as a separate entity means treatment without application of the rules of this section, but with the application of the other consolidated return regulations. For example, if S sells the stock of another member to B, S's gain or loss on a separate entity basis is determined with the application of § 1.1502–80(b) (non-applicability of section 304), but without redetermination under paragraph (c) or (d) of this section.

(6) *Attributes.* The attributes of an intercompany item or corresponding item are all of the item's characteristics, except *amount, location,* and *timing,* necessary to determine the item's effect on taxable income (and tax liability). For example, attributes include character, source, treatment as excluded from gross income or as a noncapital, nondeductible amount, and treatment as built-in gain or loss under section 382(h) or 384. In contrast, the characteristics of property, such as a member's holding period, or the fact that property is included in inventory, are not attributes of an item, but these characteristics might affect the determination of the attributes of items from the property.

(c) *Matching rule.* For each consolidated return year, B's corresponding items and S's intercompany items are taken into account under the following rules:

(1) *Attributes and holding periods*—(i) *Attributes.* The separate entity attributes of S's intercompany items and B's corresponding items are redetermined to the extent necessary to produce the same effect on consolidated taxable income (and consolidated tax liability) as if S and B were divisions of a single corporation, and the intercompany transaction were a transaction between divisions. Thus, the activities of both S and B might affect the attributes of both intercompany items and corresponding items. For example, if S holds property for sale to unrelated customers in the ordinary course of its trade or business, S sells the property to B at a gain and B sells the property to an unrelated person at a further gain, S's intercompany gain and B's corresponding gain might be ordinary because of S's activities with respect to the property. Similar principles apply if S performs services, rents property, or engages in any other intercompany transaction.

(ii) *Holding periods.* The holding period of property transferred in an intercompany transaction is the aggregate of the holding periods of S and B. However, if the basis of the property is determined by reference to the basis of other property, the property's holding period is determined by reference to

the holding period of the other property. For example, if S distributes stock to B in a transaction to which section 355 applies, B's holding period in the distributed stock is determined by reference to B's holding period in the stock of S.

(2) *Timing*—(i) *B's items.* B takes its corresponding items into account under its accounting method, but the redetermination of the attributes of a corresponding item might affect its timing. For example, if B's sale of property acquired from S is treated as a dealer disposition because of S's activities, section 453(b) prevents any corresponding income of B from being taken into account under the installment method.

(ii) *S's items.* S takes its intercompany item into account to reflect the difference for the year between B's corresponding item taken into account and the recomputed corresponding item.

(3) *Divisions of a single corporation.* As divisions of a single corporation, S and B are treated as engaging in their actual transaction and owning any actual property involved in the transaction (rather than treating the transaction as not occurring). For example, S's sale of land held for investment to B for cash is not disregarded, but is treated as an exchange of land for cash between divisions (and B therefore succeeds to S's basis in the property). Similarly, S's issuance of its own stock to B in exchange for property is not disregarded, B is treated as owning the stock it receives in the exchange, and section 1032 does not apply to B on its subsequent sale of the S stock. Although treated as divisions, S and B nevertheless are treated as:

(i) Operating separate trades or businesses. See, e.g., § 1.446–1(d) (accounting methods for a taxpayer engaged in more than one business).

(ii) Having any special status that they have under the Internal Revenue Code or regulations. For example, a bank defined in section 581, a domestic building and loan association defined in section 7701(a)(19), and an insurance company to which section 801 or 831 applies are treated as divisions having separate special status. On the other hand, the fact that a member holds property for sale to customers in the ordinary course of its trade or business is not a special status.

(4) *Conflict or allocation of attributes.* This paragraph (c)(4) provides special rules for redetermining and allocating attributes under paragraph (c)(1)(i) of this section.

(i) *Offsetting amounts*—(A) *In general.* To the extent B's corresponding item offsets S's intercompany item in amount, the attributes of B's corresponding item, determined based on both S's and B's activities, control the attributes of S's offsetting intercompany item. For example, if S sells depreciable property to B at a gain and B depreciates the property, the attributes of B's depreciation deduction (ordinary deduction) control the attributes of S's offsetting intercompany gain. Accordingly, S's gain is ordinary.

(B) *B controls unreasonable.* To the extent the results under paragraph (c)(4)(i)(A) are inconsistent with treating S and B as divisions of a single corporation, the attributes of the offsetting items must be redetermined in a manner consistent with treating S and B as divisions of a single corporation. To the extent, however, that B's corresponding item on a separate entity basis is excluded from gross income, is a noncapital, nondeductible amount, or is otherwise permanently disallowed or eliminated, the attributes of B's corresponding item always control the attributes of S's offsetting intercompany item.

(ii) *Allocation.* To the extent S's intercompany item and B's corresponding item do not offset in amount, the attributes redetermined under paragraph (c)(1)(i) of this section must be allocated to S's intercompany item and B's corresponding item by using a method that is reasonable in light of all the facts and circumstances, including the purposes of this section and any other rule affected by the attributes of S's intercompany item and B's corresponding item. A method of allocation or redetermination is unreasonable if it is not used consistently by all members of the group from year to year.

(5) *Special status.* Notwithstanding the general rule of paragraph (c)(1)(i) of

this section, to the extent an item's attributes determined under this section are permitted or not permitted to a member under the Internal Revenue Code or regulations by reason of the member's special status, the attributes required under the Internal Revenue Code or regulations apply to that member's items (but not the other member). For example, if S is a bank to which section 582(c) applies, and sells debt securities at a gain to B, a nonbank, the character of S's intercompany gain is ordinary as required under section 582(c), but the character of B's corresponding item as capital or ordinary is determined under paragraph (c)(1)(i) of this section without the application of section 582(c). For other special status issues, see, for example, sections 595(b) (foreclosure on property securing loans), 818(b) (life insurance company treatment of capital gains and losses), and 1503(c) (limitation on absorption of certain losses).

(6) *Treatment of intercompany items if corresponding items are excluded or nondeductible*—(i) *In general.* Under paragraph (c)(1)(i) of this section, S's intercompany item might be redetermined to be excluded from gross income or treated as a noncapital, nondeductible amount. For example, S's intercompany loss from the sale of property to B is treated as a noncapital, nondeductible amount if B distributes the property to a nonmember shareholder at no further gain or loss (because, if S and B were divisions of a single corporation, the loss would not have been recognized under section 311(a)). Paragraph (c)(6)(ii) of this section, however, provides limitations on the application of this rule to intercompany income or gain. See also §§ 1.1502–32 and 1.1502–33 (adjustments to S's stock basis and earnings and profits to reflect amounts so treated).

(ii) *Limitation on treatment of intercompany items as excluded from gross income.* Notwithstanding the general rule of paragraph (c)(1)(i) of this section, S's intercompany income or gain is redetermined to be excluded from gross income only to the extent one of the following applies:

(A) *Disallowed amounts.* B's corresponding item is a deduction or loss and, in the taxable year the item is taken into account under this section, it is permanently and explicitly disallowed under another provision of the Internal Revenue Code or regulations. For example, deductions that are disallowed under section 265 are permanently and explicitly disallowed. An amount is not permanently and explicitly disallowed, for example, to the extent that—

(*1*) The Internal Revenue Code or regulations provide that the amount is not recognized (for example, a loss that is realized but not recognized under section 332 or section 355(c) is not permanently and explicitly disallowed, notwithstanding that it is a corresponding item within the meaning of paragraph (b)(3)(ii) of this section (certain disallowed or eliminated amounts));

(*2*) A related amount might be taken into account by B with respect to successor property, such as under section 280B (demolition costs recoverable as capitalized amounts);

(*3*) A related amount might be taken into account by another taxpayer, such as under section 267(d) (disallowed loss under section 267(a) might result in nonrecognition of gain for a related person);

(*4*) A related amount might be taken into account as a deduction or loss, including as a carryforward to a later year, under any provision of the Internal Revenue Code or regulations (whether or not the carryforward expires in a later year); or

(*5*) The amount is reflected in the computation of any credit against (or other reduction of) Federal income tax (whether allowed for the taxable year or carried forward to a later year).

(B) *Section 311.* The corresponding item is a loss that is realized, but not recognized under section 311(a) on a distribution to a nonmember (even though the loss is not a permanently and explicitly disallowed amount within the meaning of paragraph (c)(6)(ii)(A) of this section).

(C) *Other amounts.* The Commissioner determines that treating S's intercompany item as excluded from gross income is consistent with the purposes of this section and other applicable provisions of the Internal Revenue Code and regulations.

(7) *Examples*—(i) *In general.* For purposes of the examples in this section, unless otherwise stated, P is the common parent of the P consolidated group, P owns all of the only class of stock of subsidiaries S and B, X is a person unrelated to any member of the P group, the taxable year of all persons is the calendar year, all persons use the accrual method of accounting, tax liabilities are disregarded, the facts set forth the only corporate activity, no member has any special status, and the transaction is not otherwise subject to recharacterization. If a member acts as both a selling member and a buying member (e.g., with respect to different aspects of a single transaction, or with respect to related transactions), the member is referred to as M, M1, or M2 (rather than as S or B).

(ii) *Matching rule.* The matching rule of this paragraph (c) is illustrated by the following examples.

Example 1. Intercompany sale of land followed by sale to a nonmember. (a) *Facts.* S holds land for investment with a basis of $70. S has held the land for more than one year. On January 1 of Year 1, S sells the land to B for $100. B also holds the land for investment. On July 1 of Year 3, B sells the land to X for $110.

(b) *Definitions.* Under paragraph (b)(1) of this section, S's sale of the land to B is an intercompany transaction, S is the selling member, and B is the buying member. Under paragraphs (b)(2) and (3) of this section, S's $30 gain from the sale to B is its intercompany item, and B's $10 gain from the sale to X is its corresponding item.

(c) *Attributes.* Under the matching rule of paragraph (c) of this section, S's $30 intercompany gain and B's $10 corresponding gain are taken into account to produce the same effect on consolidated taxable income (and consolidated tax liability) as if S and B were divisions of a single corporation. In addition, the holding periods of S and B for the land are aggregated. Thus, the group's entire $40 of gain is long-term capital gain. Because both S's intercompany item and B's corresponding item on a separate entity basis are long-term capital gain, the attributes are not redetermined under paragraph (c)(1)(i) of this section.

(d) *Timing.* For each consolidated return year, S takes its intercompany item into account under the matching rule to reflect the difference for the year between B's corresponding item taken into account and the recomputed corresponding item. If S and B were divisions of a single corporation and the intercompany sale were a transfer between the divisions, B would succeed to S's $70 basis in the land and would have a $40 gain from the sale to X in Year 3, instead of a $10 gain. Consequently, S takes no gain into account in Years 1 and 2, and takes the entire $30 gain into account in Year 3, to reflect the $30 difference in that year between the $10 gain B takes into account and the $40 recomputed gain (the recomputed corresponding item). Under §§ 1.1502–32 and 1.1502–33, P's basis in its S stock and the earnings and profits of S and P do not reflect S's $30 gain until the gain is taken into account in Year 3. (Under paragraph (a)(3) of this section, the results would be the same if S sold the land to B in an installment sale to which section 453 would otherwise apply, because S must take its intercompany gain into account under this section.)

(e) *Intercompany loss followed by sale to a nonmember at a gain.* The facts are the same as in paragraph (a) of this *Example 1,* except that S's basis in the land is $130 (rather than $70). The attributes and timing of S's intercompany loss and B's corresponding gain are determined under the matching rule in the manner provided in paragraphs (c) and (d) of this *Example 1.* If S and B were divisions of a single corporation and the intercompany sale were a transfer between the divisions, B would succeed to S's $130 basis in the land and would have a $20 loss from the sale to X instead of a $10 gain. Thus, S takes its entire $30 loss into account in Year 3 to reflect the $30 difference between B's $10 gain taken into account and the $20 recomputed loss. (The results are the same under section 267(f).) S's $30 loss is long-term capital loss, and B's $10 gain is long-term capital gain.

(f) *Intercompany gain followed by sale to a nonmember at a loss.* The facts are the same as in paragraph (a) of this *Example 1,* except that B sells the land to X for $90 (rather than $110). The attributes and timing of S's intercompany gain and B's corresponding loss are determined under the matching rule. If S and B were divisions of a single corporation and the intercompany sale were a transfer between the divisions, B would succeed to S's $70 basis in the land and would have a $20 gain from the sale to X instead of a $10 loss. Thus, S takes its entire $30 gain into account in Year 3 to reflect the $30 difference between B's $10 loss taken into account and the $20 recomputed gain. S's $30 gain is long-term capital gain, and B's $10 loss is long-term capital loss.

(g) *Intercompany gain followed by distribution to a nonmember at a loss.* The facts are the same as in paragraph (a) of this *Example 1,* except that B distributes the land to X, a minority shareholder of B, and at the time of the distribution the land has a fair market value of $90. The attributes and timing of S's intercompany gain and B's corresponding loss are determined under the matching rule. Under section 311(a), B does not recognize its

$10 loss on the distribution to X. If S and B were divisions of a single corporation and the intercompany sale were a transfer between divisions, B would succeed to S's $70 basis in the land and would have a $20 gain from the distribution to X instead of an unrecognized $10 loss. Under paragraph (b)(3)(ii) of this section, B's loss that is not recognized under section 311(a) is a corresponding item. Thus, S takes its $30 gain into account under the matching rule in Year 3 to reflect the difference between B's $10 corresponding unrecognized loss and the $20 recomputed gain. B's $10 corresponding loss offsets $10 of S's intercompany gain and, under paragraph (c)(4)(i) of this section, the attributes of B's corresponding item control the attributes of S's intercompany item. Paragraph (c)(6) of this section does not prevent the redetermination of S's intercompany item as excluded from gross income. (See paragraph (c)(6)(ii)(B) of this section). Thus, $10 of S's $30 gain is redetermined to be excluded from gross income.

(h) *Intercompany sale followed by section 1031 exchange with nonmember.* The facts are the same as in paragraph (a) of this *Example 1,* except that, instead of selling the land to X, B exchanges the land for land owned by X in a transaction to which section 1031 applies. There is no difference in Year 3 between B's $0 corresponding item taken into account and the $0 recomputed corresponding item. Thus, none of S's intercompany gain is taken into account under the matching rule as a result of the section 1031 exchange. Instead, B's gain is preserved in the land received from X and, under the successor asset rule of paragraph (j)(1) of this section, S's intercompany gain is taken into account by reference to the replacement property. (If B takes gain into account as a result of boot received in the exchange, S's intercompany gain is taken into account under the matching rule to the extent the boot causes a difference between B's gain taken into account and the recomputed gain.)

(i) *Intercompany sale followed by section 351 transfer to nonmember.* The facts are the same as in paragraph (a) of this *Example 1,* except that, instead of selling the land to X, B transfers the land to X in a transaction to which section 351(a) applies and X remains a nonmember. There is no difference in Year 3 between B's $0 corresponding item taken into account and the $0 recomputed corresponding item. Thus, none of S's intercompany gain is taken into account under the matching rule as a result of the section 351(a) transfer. However, S's entire gain is taken into account in Year 3 under the acceleration rule of paragraph (d) of this section (because X, a nonmember, reflects B's $100 cost basis in the land under section 362).

Example 2. Dealer activities. (a) *Facts.* S holds land for investment with a basis of $70. On January 1 of Year 1, S sells the land to B for $100. B develops the land as residential real estate, and sells developed lots to customers during Year 3 for an aggregate amount of $110.

(b) *Attributes.* S and B are treated under the matching rule as divisions of a single corporation for purposes of determining the attributes of S's intercompany item and B's corresponding item. Thus, although S held the land for investment, whether the gain is treated as from the sale of property described in section 1221(1) is based on the activities of both S and B. If, based on both S's and B's activities, the land is described in section 1221(1), both S's gain and B's gain are ordinary income.

Example 3. Intercompany section 351 transfer. (a) *Facts.* S holds land with a $70 basis and a $100 fair market value for sale to customers in the ordinary course of business. On January 1 of Year 1, S transfers the land to B in exchange for all of the stock of B in a transaction to which section 351 applies. S has no gain or loss under section 351(a), and its basis in the B stock is $70 under section 358. Under section 362, B's basis in the land is $70. B holds the land for investment. On July 1 of Year 3, B sells the land to X for $100. Assume that if S and B were divisions of a single corporation, B's gain from the sale would be ordinary income because of S's activities.

(b) *Timing and attributes.* Under paragraph (b)(1) of this section, S's transfer to B is an intercompany transaction. Under paragraph (c)(3) of this section, S is treated as transferring the land in exchange for B's stock even though, as divisions, S could not own stock of B. S has no intercompany item, but B's $30 gain from its sale of the land to X is a corresponding item because the land was acquired in an intercompany transaction. B's $30 gain is ordinary income that is taken into account under B's method of accounting.

(c) *Intercompany section 351 transfer with boot.* The facts are the same as in paragraph (a) of this *Example 3,* except that S receives $10 cash in addition to the B stock in the transfer. S recognizes $10 of gain under section 351(b), and its basis in the B stock is $70 under section 358. Under section 362, B's basis in the land is $80. S takes its $10 intercompany gain into account in Year 3 to reflect the $10 difference between B's $20 corresponding gain taken into account and the $30 recomputed gain. Both S's $10 gain and B's $20 gain are ordinary income.

(d) *Partial disposition.* The facts are the same as in paragraph (c) of this *Example 3,* except B sells only a one- half, undivided interest in the land to X for $50. The timing and attributes are determined in the manner provided in paragraph (b) of this *Example 3,* except that S takes only $5 of its gain into account in Year 3 to reflect the $5 difference between B's $10 gain taken into account and the $15 recomputed gain.

Example 4. Depreciable property. (a) *Facts.* On January 1 of Year 1, S buys 10-year recovery property for $100 and depreciates it under the straight-line method. On January 1 of Year 3, S sells the property to B for $130. Under section 168(i)(7), B is treated as S for purposes of section 168 to the extent B's $130 basis does not exceed S's adjusted basis at the time of the sale. B's additional basis is treated as new 10-year recovery property for which B elects the straight-line method of recovery. (To simplify the example, the half-year convention is disregarded.)

(b) *Depreciation through Year 3; intercompany gain.* S claims $10 of depreciation for each of Years 1 and 2 and has an $80 basis at the time of the sale to B. Thus, S has a $50 intercompany gain from its sale to B. For Year 3, B has $10 of depreciation with respect to $80 of its basis (the portion of its $130 basis not exceeding S's adjusted basis). In addition, B has $5 of depreciation with respect to the $50 of its additional basis that exceeds S's adjusted basis.

(c) *Timing.* S's $50 gain is taken into account to reflect the difference for each consolidated return year between B's depreciation taken into account with respect to the property and the recomputed depreciation. For Year 3, B takes $15 of depreciation into account. If the intercompany transaction were a transfer between divisions of a single corporation, B would succeed to S's adjusted basis in the property and take into account only $10 of depreciation for Year 3. Thus, S takes $5 of gain into account in Year 3. In each subsequent year that B takes into account $15 of depreciation with respect to the property, S takes into account $5 of gain.

(d) *Attributes.* Under paragraph (c)(1)(i) of this section, the attributes of S's gain and B's depreciation must be redetermined to the extent necessary to produce the same effect on consolidated taxable income as if the intercompany transaction were between divisions of a single corporation (the group must have a net depreciation deduction of $10). In each year, $5 of B's corresponding depreciation deduction offsets S's $5 intercompany gain taken into account and, under paragraph (c)(4)(i) of this section, the attributes of B's corresponding item control the attributes of S's intercompany item. Accordingly, S's intercompany gain that is taken into account as a result of B's depreciation deduction is ordinary income.

(e) *Sale of property to a nonmember.* The facts are the same as in paragraph (a) of this *Example 4,* except that B sells the property to X on January 1 of Year 5 for $110. As set forth in paragraphs (c) and (d) of this *Example 4,* B has $15 of depreciation with respect to the property in each of Years 3 and 4, causing S to take $5 of intercompany gain into account in each year as ordinary income. The $40 balance of S's intercompany gain is taken into account in Year 5 as a result of B's sale to X, to reflect the $40 difference between B's $10 gain taken into account and the $50 of recomputed gain ($110 of sale proceeds minus the $60 basis B would have if the intercompany sale were a transfer between divisions of a single corporation). Treating S and B as divisions of a single corporation, $40 of the gain is section 1245 gain and $10 is section 1231 gain. On a separate entity basis, S would have more than $10 treated as section 1231 gain, and B would have no amount treated as section 1231 gain. Under paragraph (c)(4)(ii) of this section, all $10 of the section 1231 gain is allocated to S. S's remaining $30 of gain, and all of B's $10 gain, is treated as section 1245 gain.

Example 5. Intercompany sale followed by installment sale. (a) *Facts.* S holds land for investment with a basis of $70x. On January 1 of Year 1, S sells the land to B for $100x. B also holds the land for investment. On July 1 of Year 3, B sells the land to X in exchange for X's $110x note. The note bears a market rate of interest in excess of the applicable Federal rate, and provides for principal payments of $55x in Year 4 and $55x in Year 5. The interest charge under section 453A(c) applies to X's note.

(b) *Timing and attributes.* S takes its $30x gain into account to reflect the difference in each consolidated return year between B's gain taken into account for the year and the recomputed gain. Under section 453, B takes into account $5x of gain in Year 4 and $5x of gain in Year 5. Thus, S takes into account $15x of gain in Year 4 and $15x of gain in Year 5 to reflect the $15x difference in each of those years between B's $5x gain taken into account and the $20x recomputed gain. Both S's $30x gain and B's $10x gain are subject to the section 453A(c) interest charge beginning in Year 3.

(c) *Election out under section 453(d).* If, under the facts in paragraph (a) of this *Example 5,* the P group wishes to elect not to apply section 453 with respect to S's gain, an election under section 453(d) must be made for Year 3 with respect to B's gain. This election will cause B's $10x gain to be taken into account in Year 3. Under the matching rule, this will result in S's $30x gain being taken into account in Year 3. (An election by the P group solely with respect to S's gain has no effect because the gain from S's sale to B is taken into account under the matching rule, and therefore must reflect the difference between B's gain taken into account and the recomputed gain.)

(d) *Sale to a nonmember at a loss, but overall gain.* The facts are the same as in paragraph (a) of this *Example 5,* except that B sells the land to X in exchange for X's $90x note (rather than $110x note). If S and B were divisions of a single corporation, B would succeed to S's basis in the land, and the sale to X would be eligible for installment reporting under section 453, because it resulted in an overall

gain. However, because only gains may be reported on the installment method, B's $10x corresponding loss is taken into account in Year 3. Under paragraph (b)(4) of this section the recomputed corresponding item is $20x gain that would be taken into account under the installment method, $0 in Year 3 and $10x in each of Years 4 and 5. Thus, in Year 3 S takes $10x of gain into account to reflect the difference between B's $10x loss taken into account and the $0 recomputed gain for Year 3. Under paragraph (c)(4)(i) of this section, B's $10x corresponding loss offsets $10x of S's intercompany gain, and B's attributes control. S takes $10x of gain into account in each of Years 4 and 5 to reflect the difference in those years between B's $0 gain taken into account and the $10x recomputed gain that would be taken into account under the installment method. Only the $20x of S's gain taken into account in Years 4 and 5 is subject to the interest charge under section 453A(c) beginning in Year 3. (If P elects under section 453(d) for Year 3 not to apply section 453 with respect to the gain, all of S's $30x gain will be taken into account in Year 3 to reflect the difference between B's $10x loss taken into account and the $20x recomputed gain.)

(e) *Intercompany loss, installment gain.* The facts are the same as in paragraph (a) of this *Example 5,* except that S has a $130x (rather than $70x) basis in the land. Under paragraph (c)(1)(i) of this section, the separate entity attributes of S's and B's items from the intercompany transaction must be redetermined to produce the same effect on consolidated taxable income (and tax liability) as if the transaction had been a transfer between divisions. If S and B were divisions of a single corporation, B would succeed to S's basis in the land and the group would have $20x loss from the sale to X, installment reporting would be unavailable, and the interest charge under section 453A(c) would not apply. Accordingly, B's gain from the transaction is not eligible for installment treatment under section 453. B takes its $10x gain into account in Year 3, and S takes its $30x of loss into account in Year 3 to reflect the difference between B's $10x gain and the $20x recomputed loss.

(f) *Recapture income.* The facts are the same as in paragraph (a) of this *Example 5,* except that S bought depreciable property (rather than land) for $100x, claimed depreciation deductions, and reduced the property's basis to $70x before Year 1. (To simplify the example, B's depreciation is disregarded.) If the intercompany sale of property had been a transfer between divisions of a single corporation, $30x of the $40x gain from the sale to X would be section 1245 gain (which is ineligible for installment reporting) and $10x would be section 1231 gain (which is eligible for installment reporting). On a separate entity basis, S would have $30x of section 1245 gain and B would have $10x of section 1231 gain. Accordingly, the attributes are not redetermined under paragraph (c)(1)(i) of this section. All of B's $10x gain is eligible for installment reporting and is taken into account $5x each in Years 4 and 5 (and is subject to the interest charge under section 453A(c)). S's $30x gain is taken into account in Year 3 to reflect the difference between B's $0 gain taken into account and the $30x of recomputed gain. (If S had bought the depreciable property for $110x and its recomputed basis under section 1245 had been $110x (rather than $100x), B's $10x gain and S's $30x gain would both be recapture income ineligible for installment reporting.)

Example 6. Intercompany sale of installment obligation. (a) *Facts.* S holds land for investment with a basis of $70x. On January 1 of Year 1, S sells the land to X in exchange for X's $100x note, and S reports its gain on the installment method under section 453. X's note bears interest at a market rate of interest in excess of the applicable Federal rate, and provides for principal payments of $50x in Year 5 and $50x in Year 6. Section 453A applies to X's note. On July 1 of Year 3, S sells X's note to B for $100x, resulting in $30x gain from S's prior sale of the land to X under section 453B(a).

(b) *Timing and attributes.* S's sale of X's note to B is an intercompany transaction, and S's $30x gain is intercompany gain. S takes $15x of the gain into account in each of Years 5 and 6 to reflect the $15x difference in each year between B's $0 gain taken into account and the $15x recomputed gain. S's gain continues to be treated as its gain from the sale to X, and the deferred tax liability remains subject to the interest charge under section 453A(c).

(c) *Worthlessness.* The facts are the same as in paragraph (a) of this *Example 6,* except that X's note becomes worthless on December 1 of Year 3 and B has a $100x short-term capital loss under section 165(g) on a separate entity basis. Under paragraph (c)(1)(ii) of this section, B's holding period for X's note is aggregated with S's holding period. Thus, B's loss is a long- term capital loss. S takes its $30x gain into account in Year 3 to reflect the $30x difference between B's $100x loss taken into account and the $70x recomputed loss. Under paragraph (c)(1)(i) of this section, S's gain is long-term capital gain.

(d) *Pledge.* The facts are the same as in paragraph (a) of this *Example 6,* except that, on December 1 of Year 3, B borrows $100x from an unrelated bank and secures the indebtedness with X's note. X's note remains subject to section 453A(d) following the sale to B. Under section 453A(d), B's $100x of proceeds from the secured indebtedness is treated as an amount received on December 1 of Year 3 by B on X's note. Thus, S takes its entire $30x gain into account in Year 3.

Example 7. Performance of services. (a) *Facts.* S is a driller of water wells. B operates a ranch in a remote location, and B's taxable income from the ranch is not subject to section 447. B's ranch requires water to maintain its cattle. During Year 1, S drills an artesian well on B's ranch in exchange for $100 from B, and S incurs $80 of expenses (e.g., for employees and equipment). B capitalizes its $100 cost for the well under section 263, and takes into account $10 of cost recovery deductions in each of Years 2 through 11. Under its separate entity method of accounting, S would take its income and expenses into account in Year 1. If S and B were divisions of a single corporation, the costs incurred in drilling the well would be capitalized.

(b) *Definitions.* Under paragraph (b)(1) of this section, the service transaction is an intercompany transaction, S is the selling member, and B is the buying member. Under paragraph (b)(2)(ii) of this section, S's $100 of income and $80 of related expenses are both included in determining its intercompany income of $20.

(c) *Timing and attributes.* S's $20 of intercompany income is taken into account under the matching rule to reflect the $20 difference between B's corresponding items taken into account (based on its $100 cost basis in the well) and the recomputed corresponding items (based on the $80 basis that B would have if S and B were divisions of a single corporation and B's basis were determined by reference to S's $80 of expenses). In Year 1, S takes into account $80 of its income and the $80 of expenses. In each of Years 2 through 11, S takes $2 of its $20 intercompany income into account to reflect the annual $2 difference between B's $10 of cost recovery deductions taken into account and the $8 of recomputed cost recovery deductions. S's $100 income and $80 expenses, and B's cost recovery deductions, are ordinary items (because S's and B's items would be ordinary on a separate entity basis, the attributes are not redetermined under paragraph (c)(1)(i) of this section). If S's offsetting $80 of income and expense would not be taken into account in the same year under its separate entity method of accounting, they nevertheless must be taken into account under this section in a manner that clearly reflects consolidated taxable income. See paragraph (a)(3)(i) of this section.

(d) *Sale of capitalized services.* The facts are the same as in paragraph (a) of this *Example 7,* except that B sells the ranch before Year 11 and recognizes gain attributable to the well. To the extent of S's income taken into account as a result of B's cost recovery deductions, as well as S's offsetting $80 of income and expense, the timing and attributes are determined in the manner provided in paragraph (c) of this *Example 7.* The attributes of the remainder of S's $20 of income and B's gain from the sale are redetermined to produce the same effect on consolidated taxable income as if S and B were divisions of a single corporation. Accordingly, S's remaining intercompany income is treated as recapture income or section 1231 gain, even though it is from S's performance of services.

Example 8. Rental of property. B operates a ranch that requires grazing land for its cattle. S owns undeveloped land adjoining B's ranch. On January 1 of Year 1, S leases grazing rights to B for Year 1. B's $100 rent expense is deductible for Year 1 under its separate entity accounting method. Under paragraph (b)(1) of this section, the rental transaction is an intercompany transaction, S is the selling member, and B is the buying member. S takes its $100 of income into account in Year 1 to reflect the $100 difference between B's rental deduction taken into account and the $0 recomputed rental deduction. S's income and B's deduction are ordinary items (because S's intercompany item and B's corresponding item would both be ordinary on a separate entity basis, the attributes are not redetermined under paragraph (c)(1)(i) of this section).

Example 9. Intercompany sale of a partnership interest. (a) *Facts.* S owns a 20% interest in the capital and profits of a general partnership. The partnership holds land for investment with a basis equal to its value, and operates depreciable assets which have value in excess of basis. S's basis in its partnership interest equals its share of the adjusted basis of the partnership's land and depreciable assets. The partnership has an election under section 754 in effect. On January 1 of Year 1, S sells its partnership interest to B at a gain. During Years 1 through 10, the partnership depreciates the operating assets, and B's depreciation deductions from the partnership reflect the increase in the basis of the depreciable assets under section 743(b).

(b) *Timing and attributes.* S's gain is taken into account during Years 1 through 10 to reflect the difference in each year between B's depreciation deductions from the partnership taken into account and the recomputed depreciation deductions from the partnership. Under paragraphs (c)(1)(i) and (c)(4)(i) of this section, S's gain taken into account is ordinary income. (The acceleration rule does not apply to S's gain as a result of the section 743(b) adjustment, because the adjustment is solely with respect to B and therefore no nonmember reflects any part of the intercompany transaction.)

(c) *Partnership sale of assets.* The facts are the same as in paragraph (a) of this *Example 9,* and the partnership sells some of its depreciable assets to X at a gain on December 31 of Year 4. In addition to the intercompany gain taken into account as a result of the partnership's depreciation, S takes intercompany gain into account in Year 4 to reflect the difference between B's partnership

items taken into account from the sale (which reflect the basis increase under section 743(b)) and the recomputed partnership items. The attributes of S's additional gain are redetermined to produce the same effect on consolidated taxable income as if S and B were divisions of a single corporation (recapture income or section 1231 gain).

(d) *B's sale of partnership interest.* The facts are the same as in paragraph (a) of this *Example 9,* and on December 31 of Year 4, B sells its partnership interest to X at no gain or loss. In addition to the intercompany gain taken into account as a result of the partnership's depreciation, the remaining balance of S's intercompany gain is taken into account in Year 4 to reflect the difference between B's $0 gain taken into account from the sale of the partnership interest and the recomputed gain. The character of S's remaining intercompany item and B's corresponding item are determined on a separate entity basis under section 751, and then redetermined to the extent necessary to produce the same effect as treating the intercompany transaction as occurring between divisions of a single corporation.

(e) *No section 754 election.* The facts are the same as in paragraph (d) of this *Example 9,* except that the partnership does not have a section 754 election in effect, and B recognizes a capital loss from its sale of the partnership interest to X on December 31 of Year 4. Because there is no difference between B's depreciation deductions from the partnership taken into account and the recomputed depreciation deductions, S does not take any of its gain into account during Years 1 through 4 as a result of B's partnership's items. Instead, S's entire intercompany gain is taken into account in Year 4 to reflect the difference between B's loss taken into account from the sale to X and the recomputed gain or loss.

Example 10. Net operating losses subject to section 382 or the SRLY rules. (a) *Facts.* On January 1 of Year 1, P buys all of S's stock. S has net operating loss carryovers from prior years. P's acquisition results in an ownership change under section 382 with respect to S's loss carryovers, and S has a net unrealized built-in gain (within the meaning of section 382(h)(3)). S owns nondepreciable property with a $70 basis and $100 value. On July 1 of Year 3, S sells the property to B for $100, and its $30 gain is recognized built-in gain (within the meaning of section 382(h)(2)) on a separate entity basis. On December 1 of Year 5, B sells the property to X for $90.

(b) *Timing and attributes.* S's $30 gain is taken into account in Year 5 to reflect the $30 difference between B's $10 loss taken into account and the recomputed $20 gain. S and B are treated as divisions of a single corporation for purposes of applying section 382 in connection with the intercompany transaction. Under a single entity analysis, the single corporation has losses subject to limitation under section 382, and this limitation may be increased under section 382(h) if the single corporation has recognized built-in gain with respect to those losses. B's $10 corresponding loss offsets $10 of S's intercompany gain, and thus, under paragraph (c)(4)(i) of this section, $10 of S's intercompany gain is redetermined not to be recognized built-in gain. S's remaining $20 intercompany gain continues to be treated as recognized built-in gain.

(c) *B's recognized built-in gain.* The facts are the same as in paragraph (a) of this *Example 10,* except that the property declines in value after S becomes a member of the P group, S sells the property to B for its $70 basis, and B sells the property to X for $90 during Year 5. Treating S and B as divisions of a single corporation, S's sale to B does not cause the property to cease to be built-in gain property. Thus, B's $20 gain from its sale to X is recognized built-in gain that increases the section 382 limitation applicable to S's losses.

(d) *SRLY limitation.* The facts are the same as in paragraph (a) of this *Example 10,* except that P's acquisition of S is not subject to the overlap rule of §1.1502–21(g), and S's net operating loss carryovers are subject to the separate return limitation year (SRLY) rules. See §1.1502–21(c). The application of the SRLY rules depends on S's status as a separate corporation having losses from separate return limitation years. Under paragraph (c)(5), the attribute of S's intercompany item as it relates to S's SRLY limitation is not redetermined, because the SRLY limitation depends on S's special status. Accordingly, S's $30 intercompany gain is included in determining its SRLY limitation for Year 5.

Example 11. Section 475. (a) *Facts.* S, a dealer in securities within the meaning of section 475(c), owns a security with a basis of $70. The security is held for sale to customers and is not identified under section 475(b) as within an exception to marking to market. On July 1 of Year 1, S sells the security to B for $100. B is not a dealer and holds the security for investment. On December 31 of Year 1, the fair market value of the security is $100. On July 1 of Year 2, B sells the security to X for $110.

(b) *Attributes.* Under section 475, a dealer in securities can treat a security as within an exception to marking to market under section 475(b) only if it timely identifies the security as so described. Under the matching rule, attributes must be redetermined by treating S and B as divisions of a single corporation. As a result of S's activities, the single corporation is treated as a dealer with respect to securities, and B must continue to mark to market the security acquired from S. Thus, B's corresponding items and the recomputed corresponding items are determined by continuing to treat the security as

not within an exception to marking to market. Under section 475(d)(3), it is possible for the character of S's intercompany items to differ from the character of B's corresponding items.

(c) *Timing and character.* S has a $30 gain when it disposes of the security by selling it to B. This gain is intercompany gain that is taken into account in Year 1 to reflect the $30 difference between B's $0 gain taken into account from marking the security to market under section 475 and the recomputed $30 gain that would be taken into account. The character of S's gain and B's gain are redetermined as if the security were transferred between divisions. Accordingly, S's gain is ordinary income under section 475(d)(3)(A)(i), but under section 475(d)(3)(B)(ii) B's $10 gain from its sale to X is capital gain that is taken into account in Year 2.

(d) *Nondealer to dealer.* The facts are the same as in paragraph (a) of this Example 11, except that S is not a dealer and holds the security for investment with a $70 basis, B is a dealer to which section 475 applies and, immediately after acquiring the security from S for $100, B holds the security for sale to customers in the ordinary course of its trade or business. Because S is not a dealer and held the security for investment, the security is treated as properly identified as held for investment under section 475(b)(1) until it is sold to B. Under section 475(b)(3), the security thereafter ceases to be described in section 475(b)(1) because B holds the security for sale to customers. The mark-to-market requirement applies only to changes in the value of the security after B's acquisition. B's mark-to-market gain taken into account and the recomputed mark-to-market gain are both determined based on changes from the $100 value of the security at the time of B's acquisition. There is no difference between B's $0 mark-to-market gain taken into account in Year 1 and the $0 recomputed mark-to-market gain. Therefore, none of S's gain is taken into account in Year 1 as a result of B's marking the security to market in Year 1. In Year 2, B has a $10 gain when it disposes of the security by selling it to X, but would have had a $40 gain if S and B were divisions of a single corporation. Thus, S takes its $30 gain into account in Year 2 under the matching rule. Under section 475(d)(3), S's gain is capital gain even though B's subsequent gain or loss from marking to market or disposing of the security is ordinary gain or loss. If B disposes of the security at a $10 loss in Year 2, S's gain taken into account in Year 2 is still capital because on a single entity basis section 475(d)(3) would provide for $30 of capital gain and $10 of ordinary loss. Because the attributes are not redetermined under paragraph (c)(1)(i) of this section, paragraph (c)(4)(i) of this section does not apply. Furthermore, if B held the security for investment, and so identified the security under section 475(b)(1), the security would continue to be excepted from marking to market.

Example 12. Section 1092. (a) *Facts.* On July 1 of Year 1, S enters into offsetting long and short positions with respect to actively traded personal property. The positions are not section 1256 contracts, and they are the only positions taken into account for purposes of applying section 1092. On August 1 of Year 1, S sells the long position to B at an $11 loss, and there is $11 of unrealized gain in the offsetting short position. On December 1 of Year 1, B sells the long position to X at no gain or loss. On December 31 of Year 1, there is still $11 of unrealized gain in the short position. On February 1 of Year 2, S closes the short position at an $11 gain.

(b) *Timing and attributes.* If the sale from S to B were a transfer between divisions of a single corporation, the $11 loss on the sale to X would have been deferred under section 1092(a)(1)(A). Accordingly, there is no difference in Year 1 between B's corresponding item of $0 and the recomputed corresponding item of $0. S takes its $11 loss into account in Year 2 to reflect the difference between B's corresponding item of $0 taken into account in Year 2 and the recomputed loss of $11 that would have been taken into account in Year 2 under section 1092(a)(1)(B) if S and B had been divisions of a single corporation. (The results are the same under section 267(f)).

Example 13. Manufacturer incentive payments. (a) *Facts.* B is a manufacturer that sells its products to independent dealers for resale. S is a credit company that offers financing, including financing to customers of the dealers. S also purchases the product from the dealers for lease to customers of the dealers. During Year 1, B initiates a program of incentive payments to the dealers' customers. Under B's program, S buys a product from an independent dealer for $100 and leases it to a nonmember. S pays $90 to the dealer for the product, and assigns to the dealer its $10 incentive payment from B. Under their separate entity accounting methods, B would deduct the $10 incentive payment in Year 1 and S would take a $90 basis in the product. Assume that if S and B were divisions of a single corporation, the $10 payment would not be deductible and the basis of the property would be $100.

(b) *Timing and attributes.* Under paragraph (b)(1) of this section, the incentive payment transaction is an intercompany transaction. Under paragraph (b)(2)(iii) of this section, S has a $10 intercompany item not yet taken into account under its separate entity method of accounting. Under the matching rule, S takes its intercompany item into account to reflect the difference between B's corresponding item taken into account and the recomputed corresponding item. In Year 1

there is a $10 difference between B's $10 deduction taken into account and the $0 recomputed deduction. Accordingly, under the matching rule S must take the $10 incentive payment into account as intercompany income in Year 1. S's $10 of income and B's $10 deduction are ordinary items. S's basis in the product is $100 rather than the $90 it would be under S's separate entity method of accounting. S's additional $10 of basis in the product is recovered based on subsequent events (e.g., S's cost recovery deductions or its sale of the product).

Example 14. Source of income under section 863. (a) *Intercompany sale with no independent factory price.* S manufactures inventory in the United States, and recognizes $75 of income on sales to B in Year 1. B distributes the inventory in Country Y and recognizes $25 of income on sales to X, also in Year 1. Title passes from S to B, and from B to X, in Country Y. There is no independent factory price (as defined in regulations under section 863) for the sale from S to B. Under the matching rule, S's $75 intercompany income and B's $25 corresponding income are taken into account in Year 1. In determining the source of income, S and B are treated as divisions of a single corporation, and section 863 applies as if $100 of income were recognized from producing in the United States and selling in Country Y. Assume that applying the section 863 regulations on a single entity basis, $50 is treated as foreign source income and $50 as U.S. source income. Assume further that on a separate entity basis, S would have $37.50 of foreign source income and $37.50 of U.S. source income, and that all of B's $25 of income would be foreign source income. Thus, on a separate entity basis, S and B would have $62.50 of combined foreign source income and $37.50 of U.S. source income. Accordingly, under single entity treatment, $12.50 that would be treated as foreign source income on a separate entity basis is redetermined to be U.S. source income. Under paragraph (c)(1)(i) of this section, attributes are redetermined only to the extent of the $12.50 necessary to achieve the same effect as a single entity determination. Under paragraph (c)(4)(ii) of this section, the redetermined attribute must be allocated between S and B using a reasonable method. For example, it may be reasonable to recharacterize only S's foreign source income as U.S. source income because only S would have any U.S. source income on a separate entity basis. However, it may also be reasonable to allocate the redetermined attribute between S and B in proportion to their separate entity amounts of foreign source income (in a 3:2 ratio, so that $7.50 of S's foreign source income is redetermined to be U.S. source and $5 of B's foreign source income is redetermined to be U.S. source), provided the same method is applied to all similar transactions within the group.

(b) *Intercompany sale with independent factory price.* The facts are the same as in paragraph (a) of this *Example 14,* except that an independent factory price exists for the sale by S to B such that $70 of S's $75 of income is attributable to the production function. Assume that on a single entity basis, $70 is treated as U.S. source income (because of the existence of the independent factory price) and $30 is treated as foreign source income. Assume that on a separate entity basis, $70 of S's income would be treated as U.S. source, $5 of S's income would be treated as foreign source income, and all of B's $25 income would be treated as foreign source income. Because the results are the same on a single entity basis and a separate entity basis, the attributes are not redetermined under paragraph (c)(1)(i) of this section.

(c) *Sale of property reflecting intercompany services or intangibles.* S earns $10 of income performing services in the United States for B. B capitalizes S's fees into the basis of property that it manufactures in the United States and sells to an unrelated person in Year 1 at a $90 profit, with title passing in Country Y. Under the matching rule, S's $10 income and B's $90 income are taken into account in Year 1. In determining the source of income, S and B are treated as divisions of a single corporation, and section 863 applies as if $100 were earned from manufacturing in the United States and selling in Country Y. Assume that on a single entity basis $50 is treated as foreign source income and $50 is treated as U.S. source income. Assume that on a separate entity basis, S would have $10 of U.S. source income, and B would have $45 of foreign source income and $45 of U.S. source income. Accordingly, under single entity treatment, $5 of income that would be treated as U.S. source income on a separate entity basis is redetermined to be foreign source income. Under paragraph (c)(1)(i) of this section, attributes are redetermined only to the extent of the $5 necessary to achieve the same effect as a single entity determination. Under paragraph (c)(4)(ii) of this section, the redetermined attribute must be allocated between S and B using a reasonable method. (If instead of performing services, S licensed an intangible to B and earned $10 that would be treated as U.S. source income on a separate entity basis, the results would be the same.)

Example 15. Section 1248. (a) *Facts.* On January 1 of Year 1, S forms FT, a wholly owned foreign subsidiary, with a $10 contribution. During Years 1 through 3, FT has earnings and profits of $40. None of the earnings and profits is taxed as subpart F income under section 951, and FT distributes no dividends to S during this period. On January 1 of Year 4, S sells its FT stock to B for $50. While B owns FT, FT has a deficit in earnings and profits of $10. On July 1 of Year 6, B sells its

FT stock for $70 to X, an unrelated foreign corporation.

(b) *Timing.* S's $40 of intercompany gain is taken into account in Year 6 to reflect the difference between B's $20 of gain taken into account and the $60 recomputed gain.

(c) *Attributes.* Under the matching rule, the attributes of S's intercompany gain and B's corresponding gain are redetermined to have the same effect on consolidated taxable income (and consolidated tax liability) as if S and B were divisions of a single corporation. On a single entity basis, there is $60 of gain and the portion which is characterized as a dividend under section 1248 is determined on the basis of FT's $30 of earnings and profits at the time of the sale of FT to X (the sum of FT's $40 of earnings and profits while held by S and FT's $10 deficit in earnings and profits while held by B). Therefore, $30 of the $60 gain is treated as a dividend under section 1248. The remaining $30 is treated as capital gain. On a separate entity basis, all of S's $40 gain would be treated as a dividend under section 1248 and all of B's $20 gain would be treated as capital gain. Thus, as a result of the single entity determination, $10 that would be treated as a dividend under section 1248 on a separate entity basis is redetermined to be capital gain. Under paragraph (c)(4)(ii) of this section, this redetermined attribute must be allocated between S's intercompany item and B's corresponding item by using a reasonable method. On a separate entity basis, only S would have any amount treated as a dividend under section 1248 available for redetermination. Accordingly, $10 of S's income is redetermined to be not subject to section 1248, with the result that $30 of S's intercompany gain is treated as a dividend and the remaining $10 is treated as capital gain. All of B's corresponding gain is treated as capital gain, as it would be on a separate entity basis.

(d) *B has loss.* The facts are the same as in paragraph (a) of this *Example 15,* except that FT has no earnings and profits or deficit in earnings and profits while B owns FT, and B sells the FT stock to X for $40. On a single entity basis, there is $30 of gain, and section 1248 is applied on the basis of FT's $40 earnings and profits at the time of the sale of FT to X. Under section 1248, the amount treated as a dividend is limited to $30 (the amount of the gain). On a separate entity basis, S's entire $40 gain would be treated as a dividend under section 1248, and B's $10 loss would be a capital loss. B's $10 corresponding loss offsets $10 of S's intercompany gain and, under paragraph (c)(4)(i) of this section, the attributes of B's corresponding item control. Accordingly, $10 of S's gain must be redetermined to be capital gain. B's $10 loss remains a capital loss. (If, however, S sold FT to B at a loss and B sold FT to X at a gain, it may be unreasonable for the attributes of B's corresponding gain to control S's offsetting intercompany loss. If B's attributes were to control, for example, the group could possibly claim a larger foreign tax credit than would be available if S and B were divisions of a single corporation.)

(d) *Acceleration rule.* S's intercompany items and B's corresponding items are taken into account under this paragraph (d) to the extent they cannot be taken into account to produce the effect of treating S and B as divisions of a single corporation. For this purpose, the following rules apply:

(1) *S's items*—(i) *Timing.* S takes its intercompany items into account to the extent they cannot be taken into account to produce the effect of treating S and B as divisions of a single corporation. The items are taken into account immediately before it first becomes impossible to achieve this effect. For this purpose, the effect cannot be achieved—

(A) To the extent an intercompany item or corresponding item will not be taken into account in determining the group's consolidated taxable income (or consolidated tax liability) under the matching rule (for example, if S or B becomes a nonmember, or if S's intercompany item is no longer reflected in the difference between B's basis (or an amount equivalent to basis) in property and the basis (or equivalent amount) the property would have if S and B were divisions of a single corporation); or

(B) To the extent a nonmember reflects, directly or indirectly, any aspect of the intercompany transaction (e.g., if B's cost basis in property purchased from S is reflected by a nonmember under section 362 following a section 351 transaction).

(ii) *Attributes.* The attributes of S's intercompany items taken into account under this paragraph (d)(1) are determined as follows:

(A) *Sale, exchange, or distribution.* If the item is from an intercompany sale, exchange, or distribution of property, its attributes are determined under the principles of the matching rule as if B sold the property, at the time the item is taken into account under paragraph (d)(1)(i) of this section, for a cash payment equal to B's adjusted basis in the property (i.e., at no net gain or loss), to the following person:

(*1*) *Property leaves the group.* If the property is owned by a nonmember immediately after S's item is taken into account, B is treated as selling the property to that nonmember. If the nonmember is related for purposes of any provision of the Internal Revenue Code or regulations to any party to the intercompany transaction (or any related transaction) or to the common parent, the nonmember is treated as related to B for purposes of that provision. For example, if the nonmember is related to P within the meaning of section 1239(b), the deemed sale is treated as being described in section 1239(a). See paragraph (j)(6) of this section, under which property is not treated as being owned by a nonmember if it is owned by the common parent after the common parent becomes the only remaining member.

(*2*) *Property does not leave the group.* If the property is not owned by a nonmember immediately after S's item is taken into account, B is treated as selling the property to an affiliated corporation that is not a member of the group.

(B) *Other transactions.* If the item is from an intercompany transaction other than a sale, exchange, or distribution of property (e.g., income from S's services capitalized by B), its attributes are determined on a separate entity basis.

(2) *B's items*—(i) *Attributes.* The attributes of B's corresponding items continue to be redetermined under the principles of the matching rule, with the following adjustments:

(A) If S and B continue to join with each other in the filing of consolidated returns, the attributes of B's corresponding items (and any applicable holding periods) are determined by continuing to treat S and B as divisions of a single corporation.

(B) Once S and B no longer join with each other in the filing of consolidated returns, the attributes of B's corresponding items are determined as if the S division (but not the B division) were transferred by the single corporation to an unrelated person. Thus, S's activities (and any applicable holding period) before the intercompany transaction continue to affect the attributes of the corresponding items (and any applicable holding period).

(ii) *Timing.* If paragraph (d)(1) of this section applies to S, B nevertheless continues to take its corresponding items into account under its accounting method. However, the redetermination of the attributes of a corresponding item under this paragraph (d)(2) might affect its timing.

(3) *Examples.* The acceleration rule of this paragraph (d) is illustrated by the following examples.

Example 1. Becoming a nonmember—timing. (a) *Facts.* S owns land with a basis of $70. On January 1 of Year 1, S sells the land to B for $100. On July 1 of Year 3, P sells 60% of S's stock to X for $60 and, as a result, S becomes a nonmember.

(b) *Matching rule.* Under the matching rule, none of S's $30 gain is taken into account in Years 1 through 3 because there is no difference between B's $0 gain or loss taken into account and the recomputed gain or loss.

(c) *Acceleration of S's intercompany items.* Under the acceleration rule of paragraph (d) of this section, S's $30 gain is taken into account in computing consolidated taxable income (and consolidated tax liability) immediately before the effect of treating S and B as divisions of a single corporation cannot be produced. Because the effect cannot be produced once S becomes a nonmember, S takes its $30 gain into account in Year 3 immediately before becoming a nonmember. S's gain is reflected under § 1.1502–32 in P's basis in the S stock immediately before P's sale of the stock. Under § 1.1502–32, P's basis in the S stock is increased by $30, and therefore P's gain is reduced (or loss is increased) by $18 (60% of $30). See also §§ 1.1502–33 and 1.1502–76(b). (The results would be the same if S sold the land to B in an installment sale to which section 453 would otherwise apply, because S must take its intercompany gain into account under this section.)

(d) *B's corresponding items.* Notwithstanding the acceleration of S's gain, B continues to take its corresponding items into account under its accounting method. Thus, B's items from the land are taken into account based on subsequent events (e.g., its sale of the land).

(e) *Sale of B's stock.* The facts are the same as in paragraph (a) of this *Example 1*, except that P sells 60% of B's stock (rather than S stock) to X for $60 and, as a result, B becomes a nonmember. Because the effect of treating S and B as divisions of a single corporation cannot be produced once B becomes a nonmember, S takes its $30 gain into account under the acceleration rule immediately before B becomes a nonmember. (The results would be the same if S sold the land

to B in an installment sale to which section 453 would otherwise apply, because S must take its intercompany gain into account under this section.)

(f) *Discontinue filing consolidated returns.* The facts are the same as in paragraph (a) of this *Example 1,* except that the P group receives permission under §1.1502–75(c) to discontinue filing consolidated returns beginning in Year 3. Under the acceleration rule, S takes its $30 gain into account on December 31 of Year 2.

(g) *No subgroups.* The facts are the same as in paragraph (a) of this *Example 1,* except that P simultaneously sells all of the stock of both S and B to X (rather than 60% of S's stock), and S and B become members of the X consolidated group. Because the effect of treating S and B as divisions of a single corporation in the P group cannot be produced once S and B become nonmembers, S takes its $30 gain into account under the acceleration rule immediately before S and B become nonmembers. (Paragraph (j)(5) of this section does not apply to treat the X consolidated group as succeeding to the P group because the X group acquired only the stock of S and B.) However, so long as S and B continue to join with each other in the filing of consolidated returns, B continues to treat S and B as divisions of a single corporation for purposes of determining the attributes of B's corresponding items from the land.

Example 2. Becoming a nonmember—attributes. (a) *Facts.* S holds land for investment with a basis of $70. On January 1 of Year 1, S sells the land to B for $100. B holds the land for sale to customers in the ordinary course of business, and expends substantial resources over a two-year period subdividing, developing, and marketing the land. On July 1 of Year 3, before B has sold any of the land, P sells 60% of S's stock to X for $60 and, as a result, S becomes a nonmember.

(b) *Attributes.* Under the acceleration rule, the attributes of S's gain are redetermined under the principles of the matching rule as if B sold the land to an affiliated corporation that is not a member of the group for a cash payment equal to B's adjusted basis in the land (because the land continues to be held within the group). Thus, whether S's gain is capital gain or ordinary income depends on the activities of both S and B. Because S and B no longer join with each other in the filing of consolidated returns, the attributes of B's corresponding items (e.g., from its subsequent sale of the land) are redetermined under the principles of the matching rule as if the S division (but not the B division) were transferred by the single corporation to an unrelated person at the time of P's sale of the S stock. Thus, B continues to take into account the activities of S with respect to the land before the intercompany transaction.

(c) *Depreciable property.* The facts are the same as in paragraph (a) of this *Example 2,* except that the property sold by S to B is depreciable property. Section 1239 applies to treat all of S's gain as ordinary income because it is taken into account as a result of B's deemed sale of the property to an affiliated corporation that is not a member of the group (a related person within the meaning of section 1239(b)).

Example 3. Selling member's disposition of installment note. (a) *Facts.* S owns land with a basis of $70. On January 1 of Year 1, S sells the land to B in exchange for B's $110 note. The note bears a market rate of interest in excess of the applicable Federal rate, and provides for principal payments of $55 in Year 4 and $55 in Year 5. On July 1 of Year 3, S sells B's note to X for $110.

(b) *Timing.* S's intercompany gain is taken into account under this section, and not under the rules of section 453. Consequently, S's sale of B's note does not result in its intercompany gain from the land being taken into account (e.g., under section 453B). The sale does not prevent S's intercompany items and B's corresponding items from being taken into account in determining the group's consolidated taxable income under the matching rule, and X does not reflect any aspect of the intercompany transaction (X has its own cost basis in the note). S will take the intercompany gain into account under the matching rule or acceleration rule based on subsequent events (e.g., B's sale of the land). See also paragraph (g) of this section for additional rules applicable to B's note as an intercompany obligation.

Example 4. Cancellation of debt and attribute reduction under section 108(b). (a) *Facts.* S holds land for investment with a basis of $0. On January 1 of Year 1, S sells the land to B for $100. B also holds the land for investment. During Year 3, B is insolvent and B's nonmember creditors discharge $60 of B's indebtedness. Because of insolvency, B's $60 discharge is excluded from B's gross income under section 108(a), and B reduces the basis of the land by $60 under sections 108(b) and 1017.

(b) *Acceleration rule.* As a result of B's basis reduction under section 1017, $60 of S's intercompany gain will not be taken into account under the matching rule (because there is only a $40 difference between B's $40 basis in the land and the $0 basis the land would have if S and B were divisions of a single corporation). Accordingly, S takes $60 of its gain into account under the acceleration rule in Year 3. S's gain is long-term capital gain, determined under paragraph (d)(1)(ii) of this section as if B sold the land to an affiliated corporation that is not a member of the group for $100 immediately before the basis reduction.

(c) *Purchase price adjustment.* Assume instead that S sells the land to B in exchange

for B's $100 purchase money note, B remains solvent, and S subsequently agrees to discharge $60 of the note as a purchase price adjustment to which section 108(e)(5) applies. Under applicable principles of tax law, $60 of S's gain and $60 of B's basis in the land are eliminated and never taken into account. Similarly, the note is not treated as satisfied and reissued under paragraph (g) of this section.

Example 5. Section 481. (a) *Facts.* S operates several trades or businesses, including a manufacturing business. S receives permission to change its method of accounting for valuing inventory for its manufacturing business. S increases the basis of its ending inventory by $100, and the related $100 positive section 481(a) adjustment is to be taken into account ratably over six taxable years, beginning in Year 1. During Year 3, S sells all of the assets used in its manufacturing business to B at a gain. Immediately after the transfer, B does not use the same inventory valuation method as S. On a separate entity basis, S's sale results in an acceleration of the balance of the section 481(a) adjustment to Year 3.

(b) *Timing and attributes.* Under paragraph (b)(2) of this section, the balance of S's section 481(a) adjustment accelerated to Year 3 is intercompany income. However, S's $100 basis increase before the intercompany transaction eliminates the related difference for this amount between B's corresponding items taken into account and the recomputed corresponding items in subsequent periods. Because the accelerated section 481(a) adjustment will not be taken into account in determining the group's consolidated taxable income (and consolidated tax liability) under the matching rule, the balance of S's section 481 adjustment is taken into account under the acceleration rule as ordinary income at the time of the intercompany transaction. (If S's sale had not resulted in accelerating S's section 481(a) adjustment on a separate entity basis, S would have no intercompany income to be taken into account under this section.)

(e) *Simplifying rules*—(1) *Dollar-value LIFO inventory methods*—(i) *In general.* This paragraph (e)(1) applies if either S or B uses a dollar-value LIFO inventory method to account for intercompany transactions. Rather than applying the matching rule separately to each intercompany inventory transaction, this paragraph (e)(1) provides methods to apply an aggregate approach that is based on dollar-value LIFO inventory accounting. Any method selected under this paragraph (e)(1) must be applied consistently.

(ii) *B uses dollar-value LIFO*—(A) *In general.* If B uses a dollar-value LIFO inventory method to account for its intercompany inventory purchases, and includes all of its inventory costs incurred for a year in its cost of goods sold for the year (that is, B has no inventory increment for the year), S takes into account all of its intercompany inventory items for the year. If B does not include all of its inventory costs incurred for the year in its cost of goods sold for the year (that is, B has an inventory increment for the year), S does not take all of its intercompany inventory income or loss into account. The amount not taken into account is determined under either the increment averaging method of paragraph (e)(1)(ii)(B) of this section or the increment valuation method of paragraph (e)(1)(ii)(C) of this section. Separate computations are made for each pool of B that receives intercompany purchases from S, and S's amount not taken into account is layered based on B's LIFO inventory layers.

(B) *Increment averaging method.* Under this paragraph (e)(1)(ii)(B), the amount not taken into account is the amount of S's intercompany inventory income or loss multiplied by the ratio of the LIFO value of B's current-year costs of its layer of increment to B's total inventory costs incurred for the year under its LIFO inventory method. If B includes more than its inventory costs incurred during any subsequent year in its cost of goods sold (a decrement), S takes into account the intercompany inventory income or loss layers in the same manner and proportion as B takes into account its inventory decrements.

(C) *Increment valuation method.* Under this paragraph (e)(1)(ii)(C), the amount not taken into account is the amount of S's intercompany inventory income or loss for the appropriate period multiplied by the ratio of the LIFO value of B's current-year costs of its layer of increment to B's total inventory costs incurred in the appropriate period under its LIFO inventory method. The principles of paragraph (e)(1)(ii)(B) of this section otherwise apply. The appropriate period is the period of B's year used to determine its current-year costs.

(iii) *S uses dollar-value LIFO.* If S uses a dollar-value LIFO inventory method to account for its intercompany inventory sales, S may use any reasonable method of allocating its LIFO inventory costs to intercompany transactions. LIFO inventory costs include costs of prior layers if a decrement occurs. For example, a reasonable allocation of the most recent costs incurred during the consolidated return year can be used to compute S's intercompany inventory income or loss for the year if S has an inventory increment and uses the earliest acquisitions costs method, but S must apportion costs from the most recent appropriate layers of increment if an inventory decrement occurs for the year.

(iv) *Other reasonable methods.* S or B may use a method not specifically provided in this paragraph (e)(1) that is expected to reasonably take into account intercompany items and corresponding items from intercompany inventory transactions. However, if the method used results, for any year, in a cumulative amount of intercompany inventory items not taken into account by S that significantly exceeds the cumulative amount that would not be taken into account under paragraph (e)(1)(ii) or (iii) of this section, S must take into account for that year the amount necessary to eliminate the excess. The method is thereafter applied with appropriate adjustments to reflect the amount taken into account.

(v) *Examples.* The inventory rules of this paragraph (e)(1) are illustrated by the following examples.

Example 1. Increment averaging method. (a) *Facts.* Both S and B use a double-extension, dollar-value LIFO inventory method, and both value inventory increments using the earliest acquisitions cost valuation method. During Year 2, S sells 25 units of product Q to B on January 15 at $10/unit. S sells another 25 units on April 15, on July 15, and on September 15, at $12/unit. S's earliest cost of product Q is $7.50/unit and S's most recent cost of product Q is $8.00/unit. Both S and B have an inventory increment for the year. B's total inventory costs incurred during Year 2 are $6,000 and the LIFO value of B's Year 2 layer of increment is $600.

(b) *Intercompany inventory income.* Under paragraph (e)(1)(iii) of this section, S must use a reasonable method of allocating its LIFO inventory costs to intercompany transactions. Because S has an inventory increment for Year 2 and uses the earliest acquisitions cost method, a reasonable method of determining its intercompany cost of goods sold for product Q is to use its most recent costs. Thus, its intercompany cost of goods sold is $800 ($8.00 most recent cost, multiplied by 100 units sold to B), and its intercompany inventory income is $350 ($1,150 sales proceeds from B minus $800 cost).

(c) *Timing.* (i) Under the increment averaging method of paragraph (e)(1)(ii)(B) of this section, $35 of S's $350 of intercompany inventory income is not taken into account in Year 2, computed as follows:

$$\frac{\text{LIFO value of B's Year 2 layer of increment}}{\text{B's total inventory costs for Year 2}} = \frac{\$600}{\$6{,}000} = 10\%$$

$$10\% \times \text{S's \$350 intercompany inventory income} = \$35$$

(ii) Thus, $315 of S's intercompany inventory income is taken into account in Year 2 ($350 of total intercompany inventory income minus $35 not taken into account).

(d) *S incurs a decrement.* The facts are the same as in paragraph (a) of this *Example 1*, except that in Year 2, S incurs a decrement equal to 50% of its Year 1 layer. Under paragraph (e)(1)(iii) of this section, S must reasonably allocate the LIFO cost of the decrement to the cost of goods sold to B to determine S's intercompany inventory income.

(e) *B incurs a decrement.* The facts are the same as in paragraph (a) of this *Example 1*, except that B incurs a decrement in Year 2. S must take into account the entire $350 of Year 2 intercompany inventory income because all 100 units of product Q are deemed sold by B in Year 2.

Example 2. Increment valuation method. (a) The facts are the same as in Example 1. In addition, B's use of the earliest acquisition's cost method of valuing its increments results in B valuing its year-end inventory using costs incurred from January through March. B's costs incurred during the year are: $1,428 in the period January through March; $1,498 in the period April through June; $1,524 in the period July through September; and $1,550 in the period October through December. S's intercompany inventory income for these periods is: $50 in the period January through March ((25×$10) − (25×$8)); $100 in the period April through June ((25×$12) − (25×$8)); $100 in the period July through September ((25×$12) − (25×$8)); and $100 in the period October through December ((25×$12) − (25×$8)).

(b) *Timing.* (i) Under the increment valuation method of paragraph (e)(1)(ii)(C) of this

section, $21 of S's $350 of intercompany inventory income is not taken into account in Year 2, computed as follows:

$$\frac{\text{LIFO value of B's Year 2 layer of increment}}{\text{B's total inventory costs from January through March of Year 2}} = \frac{\$600}{\$1{,}428} = 42\%$$

$$42\% \times \text{S's \$50 intercompany inventory income for the period from January through March} = \$21$$

(ii) Thus, $329 of S's intercompany inventory income is taken into account in Year 2 ($350 of total intercompany inventory income minus $21 not taken into account).

(c) *B incurs a subsequent decrement.* The facts are the same as in paragraph (a) of this *Example 2.* In addition, assume that in Year 3, B experiences a decrement in its pool that receives intercompany purchases from S. B's decrement equals 20% of the base-year costs for its Year 2 layer. The fact that B has incurred a decrement means that all of its inventory costs incurred for Year 3 are included in cost of goods sold. As a result, S takes into account its entire amount of intercompany inventory income from its Year 3 sales. In addition, S takes into account $4.20 of its Year 2 layer of intercompany inventory income not already taken into account (20% of $21).

Example 3. Other reasonable inventory methods. (a) *Facts.* Both S and B use a dollar-value LIFO inventory method for their inventory transactions. During Year 1, S sells inventory to B and to X. Under paragraph (e)(1)(iv) of this section, to compute its intercompany inventory income and the amount of this income not taken into account, S computes its intercompany inventory income using the transfer price of the inventory items less a FIFO cost for the goods, takes into account these items based on a FIFO cost flow assumption for B's corresponding items, and the LIFO methods used by S and B are ignored for these computations. These computations are comparable to the methods used by S and B for financial reporting purposes, and the book methods and results are used for tax purposes. S adjusts the amount of intercompany inventory items not taken into account as required by section 263A.

(b) *Reasonable method.* The method used by S is a reasonable method under paragraph (e)(1)(iv) of this section if the cumulative amount of intercompany inventory items not taken into account by S is not significantly greater than the cumulative amount that would not be taken into account under the methods specifically described in paragraph (e)(1) of this section. If, for any year, the method results in a cumulative amount of intercompany inventory items not taken into account by S that significantly exceeds the cumulative amount that would not be taken into account under the methods specifically provided, S must take into account for that year the amount necessary to eliminate the excess. The method is thereafter applied with appropriate adjustments to reflect the amount taken into account (e.g., to prevent the amount from being taken into account more than once).

(2) *Reserve accounting*—(i) *Banks and thrifts.* Except as provided in paragraph (g)(3)(iv) of this section (deferral of items from an intercompany obligation), a member's addition to, or reduction of, a reserve for bad debts that is maintained under section 585 or 593 is taken into account on a separate entity basis. For example, if S makes a loan to a nonmember and subsequently sells the loan to B, any deduction for an addition to a bad debt reserve under section 585 and any recapture income (or reduced bad debt deductions) are taken into account on a separate entity basis rather than as intercompany items or corresponding items taken into account under this section. Any gain or loss of S from its sale of the loan to B is taken into account under this section, however, to the extent it is not attributable to recapture of the reserve.

(ii) *Insurance companies*—(A) *Direct insurance.* If a member provides insurance to another member in an intercompany transaction, the transaction is taken into account by both members on a separate entity basis. For example, if one member provides life insurance coverage for another member with respect to its employees, the premiums, reserve increases and decreases, and death benefit payments are determined and taken into account by both members on a separate entity basis rather than taken into account under this section as intercompany items and corresponding items.

(B) *Reinsurance*—(*1*) *In general.* Paragraph (e)(2)(ii)(A) of this section does not apply to a reinsurance transaction that is an intercompany transaction. For example, if a member assumes all or a portion of the risk on an insurance contract written by another member, the amounts transferred as reinsurance premiums, expense allowances, benefit reimbursements, reimbursed policyholder dividends, experience rating adjustments, and other similar items are taken into account under the matching rule and the acceleration rule. For purposes of this section, the assuming company is treated as B and the ceding company is treated as S.

(*2*) *Reserves determined on a separate entity basis.* For purposes of determining the amount of a member's increase or decrease in reserves, the amount of any reserve item listed in section 807(c) or 832(b)(5) resulting from a reinsurance transaction that is an intercompany transaction is determined on a separate entity basis. But see section 845, under which the Commissioner may allocate between or among the members any items, recharacterize any such items, or make any other adjustments necessary to reflect the proper source and character of the separate taxable income of a member.

(3) *Consent to treat intercompany transactions on a separate entity basis*—(i) *General rule.* The common parent may request consent to take into account on a separate entity basis items from intercompany transactions other than intercompany transactions with respect to stock or obligations of members. Consent may be granted for all items, or for items from a class or classes of transactions. The consent is effective only if granted in writing by the Internal Revenue Service. Unless revoked with the written consent of the Internal Revenue Service, the separate entity treatment applies to all affected intercompany transactions in the consolidated return year for which consent is granted and in all subsequent consolidated return years. Consent under this paragraph (e)(3) does not apply for purposes of taking into account losses and deductions deferred under section 267(f).

(ii) *Time and manner for requesting consent.* The request for consent described in paragraph (e)(3)(i) of this section must be made in the form of a ruling request. The request must be signed by the common parent, include any information required by the Internal Revenue Service, and be filed on or before the due date of the consolidated return (not including extensions of time) for the first consolidated return year to which the consent is to apply. The Internal Revenue Service may impose terms and conditions for granting consent. A copy of the consent must be attached to the group's consolidated returns (or amended returns) as required by the terms of the consent.

(iii) *Effect of consent on methods of accounting.* A consent for separate entity accounting under this paragraph (e)(3), and a revocation of that consent, may require changes in members' methods of accounting for intercompany transactions. Because the consent, or a revocation of the consent, is effective for all intercompany transactions occurring in the consolidated return year for which the consent or revocation is first effective, any change in method is effected on a cut-off basis. Section 446(e) consent is granted for any changes in methods of accounting for intercompany transactions that are necessary solely to conform a member's methods to a binding consent with respect to the group under this paragraph (e)(3) or the revocation of that consent, provided the changes are made in the first consolidated return year for which the consent or revocation under this paragraph (e)(3) is effective. Therefore, section 446(e) consent must be separately

requested under applicable administrative procedures if a member has failed to conform its practices to the separate entity accounting provided under this paragraph (e)(3) or the revocation of that treatment in the first consolidated return year for which the consent to use separate entity accounting or revocation of that consent is effective.

(iv) *Consent to treat intercompany transactions on a separate entity basis under prior law.* A group that has received consent that is in effect as of the first day of the first consolidated return year beginning on or after July 12, 1995 to treat certain intercompany transactions as provided in §1.1502–13(c)(3) of the regulations (as contained in the 26 CFR part 1 edition revised as of April 1, 1995) will be considered to have obtained the consent of the Commissioner to take items from intercompany transactions into account on a separate entity basis as provided in paragraph (e)(3)(i) of this section. This treatment is applicable only to the items, class or classes of transactions for which consent was granted under prior law.

(f) *Stock of members*—(1) *In general.* In addition to the general rules of this section, the rules of this paragraph (f) apply to stock of members.

(2) *Intercompany distributions to which section 301 applies*—(i) *In general.* This paragraph (f)(2) provides rules for intercompany transactions to which section 301 applies (intercompany distributions). For purposes of determining whether a distribution is an intercompany distribution, it is treated as occurring under the principles of the entitlement rule of paragraph (f)(2)(iv) of this section. A distribution is not an intercompany distribution to the extent it is deducted by the distributing member. See, for example, section 1382(c)(1).

(ii) *Distributee member.* An intercompany distribution is not included in the gross income of the distributee member (B). However, this exclusion applies to a distribution only to the extent there is a corresponding negative adjustment reflected under §1.1502–32 in B's basis in the stock of the distributing member (S). For example, no amount is included in B's gross income under section 301(c)(3) from a distribution in excess of the basis of the stock of a subsidiary that results in an excess loss account under §1.1502–32(a) which is treated as negative basis under §1.1502–19. B's dividend received deduction under section 243(a)(3) is determined without regard to any intercompany distributions under this paragraph (f)(2) to the extent they are not included in gross income. See §1.1502–26(b) (applicability of the dividends received deduction to distributions not excluded from gross income, such as a distribution from the common parent to a subsidiary owning stock of the common parent).

(iii) *Distributing member.* The principles of section 311(b) apply to S's loss, as well as gain, from an intercompany distribution of property. Thus, S's loss is taken into account under the matching rule if the property is subsequently sold to a nonmember. However, section 311(a) continues to apply to distributions to nonmembers (for example, loss is not recognized).

(iv) *Entitlement rule*—(A) *In general.* For all Federal income tax purposes, an intercompany distribution is treated as taken into account when the shareholding member becomes entitled to it (generally on the record date). For example, if B becomes entitled to a cash distribution before it is made, the distribution is treated as made when B becomes entitled to it. For this purpose, B is treated as entitled to a distribution no later than the time the distribution is taken into account under the Internal Revenue Code (e.g., under section 305(c)). To the extent a distribution is not made, appropriate adjustments must be made as of the date it was taken into account.

(B) *Nonmember shareholders.* If nonmembers own stock of the distributing corporation at the time the distribution is treated as occurring under this paragraph (f)(2)(iv), appropriate adjustments must be made to prevent the acceleration of the distribution to members from affecting distributions to nonmembers.

(3) *Boot in an intercompany reorganization*—(i) *Scope.* This paragraph (f)(3)

provides additional rules for an intercompany transaction in which the receipt of money or other property (nonqualifying property) results in the application of section 356. For example, the distribution of stock of a lower-tier member to a higher-tier member in an intercompany transaction to which section 355 would apply but for the receipt of nonqualifying property is a transaction to which this paragraph (f)(3) applies. This paragraph (f)(3) does not apply if a party to the transaction becomes a member or nonmember as part of the same plan or arrangement. For example, if S merges into a nonmember in a transaction described in section 368(a)(1)(A), this paragraph (f)(3) does not apply.

(ii) *Treatment.* Nonqualifying property received as part of a transaction described in this paragraph (f)(3) is treated as received by the member shareholder in a separate transaction. See, for example, sections 302 and 311 (rather than sections 356 and 361). The nonqualifying property is treated as taken into account immediately after the transaction if section 354 would apply but for the fact that nonqualifying property is received. It is treated as taken into account immediately before the transaction if section 355 would apply but for the fact that nonqualifying property is received. The treatment under this paragraph (f)(3)(ii) applies for all Federal income tax purposes.

(4) *Acquisition by issuer of its own stock.* If a member acquires its own stock, or an option to buy or sell its own stock, in an intercompany transaction, the member's basis in that stock or option is treated as eliminated for all purposes. Accordingly, S's intercompany items from the stock or options of B are taken into account under this section if B acquires the stock or options in an intercompany transaction (unless, for example, B acquires the stock in exchange for successor property within the meaning of paragraph (j)(1) of this section in a nonrecognition transaction). For example, if B redeems its stock from S in a transaction to which section 302(a) applies, S's gain from the transaction is taken into account immediately under the acceleration rule.

(5) *Certain liquidations and distributions*—(i) *Netting allowed.* S's intercompany item from a transfer to B of the stock of another corporation (T) is taken into account under this section in certain circumstances even though the T stock is never held by a nonmember after the intercompany transaction. For example, if S sells all of T's stock to B at a gain, and T subsequently liquidates into B in a separate transaction to which section 332 applies, S's gain is taken into account under the matching rule. Under paragraph (c)(6)(ii) of this section, S's intercompany gain taken into account as a result of a liquidation under section 332 or a comparable nonrecognition transaction is not redetermined to be excluded from gross income. Under this paragraph (f)(5)(i), if S has both intercompany income or gain and intercompany deduction or loss attributable to stock of the same corporation having the same material terms, only the income or gain in excess of the deduction or loss is subject to paragraph (c)(6)(ii) of this section. This paragraph (f)(5)(i) applies only to a transaction in which B's basis in its T stock is permanently eliminated in a liquidation under section 332 or any comparable nonrecognition transaction, including—

(A) A merger of B into T under section 368(a);

(B) A distribution by B of its T stock in a transaction described in section 355; or

(C) A deemed liquidation of T resulting from an election under section 338(h)(10).

(ii) *Elective relief*—(A) *In general.* If an election is made pursuant to this paragraph (f)(5)(ii), certain transactions are recharacterized to prevent S's items from being taken into account or to provide offsets to those items. This paragraph (f)(5)(ii) applies only if T is a member throughout the period beginning with S's transfer and ending with the completion of the nonrecognition transaction.

(B) *Section 332*—(*1*) *In general.* If section 332 applies to T's liquidation into B, and B transfers T's assets to a new member (new T) in a transaction not otherwise pursuant to the same plan or arrangement as the liquidation, the

transfer is nevertheless treated for all Federal income tax purposes as pursuant to the same plan or arrangement as the liquidation. For example, if T liquidates into B, but B forms new T by transferring substantially all of T's former assets to new T, S's intercompany gain or loss generally is not taken into account solely as a result of the liquidation if the liquidation and transfer would qualify as a reorganization described in section 368(a). (Under paragraph (j)(1) of this section, B's stock in new T would be a successor asset to B's stock in T, and S's gain would be taken into account based on the new T stock.)

(*2*) *Time limitation and adjustments.* The transfer of an asset to new T not otherwise pursuant to the same plan or arrangement as the liquidation is treated under this paragraph (f)(5)(ii)(B) as pursuant to the same plan or arrangement only if B transfers it to new T pursuant to a written plan, a copy of which is attached to a timely filed original return (including extensions) for the year of T's liquidation, and the transfer is completed within 12 months of the filing of that return. Appropriate adjustments are made to reflect any events occurring before the formation of new T and to reflect any assets not transferred to new T as part of the same plan or arrangement. For example, if B retains an asset in the reorganization, the asset is treated under paragraph (f)(3) of this section as acquired by new T but distributed to B immediately after the reorganization.

(*3*) *Downstream merger, etc.* The principles of this paragraph (f)(5)(ii)(B) apply, with appropriate adjustments, if B's basis in the T stock is eliminated in a transaction similar to a section 332 liquidation, such as a transaction described in section 368 in which B merges into T. For example, if S and B are subsidiaries, and S sells all of T's stock to B at a gain followed by B's merger into T in a separate transaction described in section 368(a), S's gain is not taken into account solely as a result of the merger if T (as successor to B) forms new T with substantially all of T's former assets.

(C) *Section 338(h)(10)*—(*1*) *In general.* This paragraph (f)(5)(ii)(C) applies to a deemed liquidation of T under section 332 as the result of an election under section 338(h)(10). This paragraph (f)(5)(ii)(C) does not apply if paragraph (f)(5)(ii)(B) of this section is applied to the deemed liquidation. Under this paragraph, B is treated with respect to each share of its T stock as recognizing as a corresponding item any loss or deduction it would recognize (determined after adjusting stock basis under § 1.1502–32) if section 331 applied to the deemed liquidation. For all other Federal income tax purposes, the deemed liquidation remains subject to section 332.

(*2*) *Limitation on amount of loss.* The amount of B's loss or deduction under this paragraph (f)(5)(ii)(C) is limited as follows—

(*i*) The aggregate amount of loss recognized with respect to T stock cannot exceed the amount of S's intercompany income or gain that is in excess of S's intercompany deduction or loss with respect to shares of T stock having the same material terms as the shares giving rise to S's intercompany income or gain; and

(*ii*) The aggregate amount of loss recognized under this paragraph (f)(5)(ii)(C) from T's deemed liquidation cannot exceed the net amount of deduction or loss (if any) that would be taken into account from the deemed liquidation if section 331 applied with respect to all T shares.

(*3*) *Asset sale, etc.* The principles of this paragraph (f)(5)(ii)(C) apply, with appropriate adjustments, if T transfers all of its assets to a nonmember and completely liquidates in a transaction comparable to the section 338(h)(10) transaction described in paragraph (f)(5)(ii)(C)(*1*) of this section. For example, if S sells all of T's stock to B at a gain followed by T's merger into a nonmember in exchange for a cash payment to B in a transaction treated for Federal income tax purposes as T's sale of its assets to the nonmember and complete liquidation, the merger is ordinarily treated as a comparable transaction.

(D) *Section 355.* If B distributes the T stock in an intercompany transaction to which section 355 applies (including an intercompany transaction to which 355 applies because of the application of paragraph (f)(3) of this section), the

redetermination of the basis of the T stock under section 358 could cause S's gain or loss to be taken into account under this section. This paragraph (f)(5)(ii)(D) applies to treat B's distribution as subject to sections 301 and 311 (as modified by this paragraph (f)), rather than section 355. The election will prevent S's gain or loss from being taken into account immediately to the extent matching remains possible, but B's gain or loss from the distribution will also be taken into account under this section.

(E) *Election.* An election to apply this paragraph (f)(5)(ii) is made in a separate statement entitled ''[Insert Name and Employer Identification Number of Common Parent] HEREBY ELECTS THE APPLICATION OF §1.1502–13(f)(5)(ii).'' The election must include a description of S's intercompany transaction and T's liquidation (or other transaction). It must specify which provision of §1.1502–13(f)(5)(ii) applies and how it alters the otherwise applicable results under this section (including, for example, the amount of S's intercompany items and the amount deferred or offset as a result of this §1.1502–13(f)(5)(ii)). A separate election must be made for each application of this paragraph (f)(5)(ii). The election must be signed by the common parent and filed with the group's income tax return for the year of T's liquidation (or other transaction). The Commissioner may impose reasonable terms and conditions to the application of this paragraph (f)(5)(ii) that are consistent with the purposes of this section.

(6) *Stock of common parent.* In addition to the general rules of this section, this paragraph (f)(6) applies to parent stock (P stock) and positions in P stock held or entered into by another member. For this purpose, P stock is any stock of the common parent held (directly or indirectly) by another member or any stock of a member (the issuer) that was the common parent if the stock was held (directly or indirectly) by another member while the issuer was the common parent.

(i) *Loss stock*—(A) *Recognized loss.* Any loss recognized, directly or indirectly, by a member with respect to P stock is permanently disallowed and does not reduce earnings and profits. See §1.1502–32(b)(3)(iii)(A) for a corresponding reduction in the basis of the member's stock.

(B) *Other cases.* If a member, M, owns P stock, the stock is subsequently owned by a nonmember, and, immediately before the stock is owned by the nonmember, M's basis in the share exceeds its fair market value, then, to the extent paragraph (f)(6)(i)(A) of this section does not apply, M's basis in the share is reduced to the share's fair market value immediately before the share is held by the nonmember. For example, if M owns shares of P stock with a $100x basis and M becomes a nonmember at a time when the P shares have a value of $60x, M's basis in the P shares is reduced to $60x immediately before M becomes a nonmember. Similarly, if M contributes the P stock to a nonmember in a transaction subject to section 351, M's basis in the shares is reduced to $60x immediately before the contribution. See §1.1502–32(b)(3)(iii)(B) for a corresponding reduction in the basis of M's stock.

(C) *Waiver of built-in loss on P stock*—*(1) In general.* If a nonmember that owns P stock with a basis in excess of its fair market value becomes a member of the P consolidated group in a qualifying cost basis transaction, the group may make an irrevocable election to reduce the basis of the P stock to its fair market value immediately before the nonmember becomes a member of the P group. If the nonmember was a member of another consolidated group immediately before becoming a member of the P group, the reduction in basis is treated as occurring immediately after it ceases to be a member of the prior group. A qualifying cost basis transaction is the purchase (i.e., a transaction in which basis is determined under section 1012) by members of the P consolidated group (while they are members) in a 12-month period of an amount of the nonmember's stock satisfying the requirements of section 1504(a)(2).

(*2*) *Election.* The election described in this paragraph (6)(i)(C) must be made in a separate statement entitled ''ELECTION TO REDUCE BASIS OF P STOCK UNDER §1.1502–13(f)(6).'' The

statement must be filed with the P consolidated group's return for the year in which the nonmember becomes a member, and it must be signed by both P and the nonmember. The statement must identify the fair market value of, and the amount of the basis reduction in, the P stock.

(ii) *Gain stock.* If a member, M, would otherwise recognize gain on a qualified disposition of P stock, then immediately before the qualified disposition, M is treated as purchasing the P stock from P for fair market value with cash contributed to M by P (or, if necessary, through any intermediate members). A disposition is a qualified disposition only if—

(A) The member acquires the P stock directly from the common parent (P) through a contribution to capital or a transaction qualifying under section 351(a) (or, if necessary, through a series of such transactions involving only members);

(B) Pursuant to a plan, the member transfers the stock immediately to a nonmember that is not related, within the meaning of section 267(b) or 707(b), to any member of the group;

(C) No nonmember receives a substituted basis in the stock within the meaning of section 7701(a)(42);

(D) The P stock is not exchanged for P stock;

(E) P neither becomes nor ceases to be the common parent as part of, or in contemplation of, the disposition or plan; and

(F) M is neither a nonmember that becomes a member nor a member that becomes a nonmember as part of, or in contemplation of, the disposition or plan.

(iii) *Mark-to-market of P stock.* Paragraphs (f)(6)(i) and (ii) of this section shall not apply to any gain or loss from a share of P stock held by a member, M, if—

(A) M regularly trades in P stock (of the same class) with customers in the ordinary course of its business as a dealer;

(B) The gain or loss on the share is taken into account by M pursuant to section 475(a);

(C) M's basis in the share is not adjusted by reference to the basis of any other property or by reference to income, gain, deduction, or loss from other property; and

(D) Neither M nor any other member of the group has structured or engaged in any transaction while a member (or in anticipation of becoming a member), during the taxable year or in any year within the preceding five taxable years that is open for assessment under section 6501, with a principal purpose of avoiding gain or creating loss on P stock subject to section 475(a).

(iv) *Options, warrants, and other positions*—(A) *In general.* This paragraph (f)(6) applies with appropriate adjustments to positions in P stock to the extent that P's gain or loss from an equivalent position would not be recognized under section 1032. Thus, if M purchases an option to buy or sell P stock and sells the option at a loss, the loss is permanently disallowed under paragraph (f)(6)(i)(A) of this section. Similarly, if M is the grantor of such an option and becomes a nonmember, then the principles of paragraph (f)(6)(i)(B) of this section apply to the extent that M would recognize loss from cash settlement of the option at its fair market value immediately before M becomes a nonmember, and proper adjustments must be made in the amount of any gain or loss subsequently realized from the position by M. If P grants M an option to acquire P stock in a transaction meeting the requirements of paragraph (f)(6)(ii) of this section, M is treated as having purchased the option from P for fair market value with cash contributed to M by P.

(B) *Mark-to-market of positions in P stock.* For purposes of paragraph (f)(6)(iii) of this section, gain or loss with respect to a position taken into account under section 1256(a) is treated as taken into account under section 475(a) to the extent that the gain or loss would be taken into account under the principles of section 475.

(v) *Effective date.* This paragraph (f)(6) applies to gain or loss taken into account on or after July 12, 1995, and to transactions occurring on or after July 12, 1995. However, paragraph (f)(6)(ii) of this section and the last sentence of paragraph (f)(6)(iv)(A) of this section do not apply to dispositions of P stock or options occurring on or after May

16, 2000. For example, if S sells P stock to B at a loss prior to July 12, 1995, and B sells the P stock to a nonmember after July 12, 1995, S's loss is disallowed because it is taken into account after July 12, 1995. If a taxpayer takes a gain or loss into account or engages in a transaction on or after July 12, 1995, during a tax year ending prior to December 31, 1995, the taxpayer may treat the gain or loss or the transaction under the rules published in 1995–32 I.R.B. 47, instead of under the rules of this paragraph (f)(6).

(7) *Examples.* The application of this section to intercompany transactions with respect to stock of members is illustrated by the following examples.

Example 1. Dividend exclusion and property distribution. (a) *Facts.* S owns land with a $70 basis and $100 value. On January 1 of Year 1, P's basis in S's stock is $100. During Year 1, S declares and makes a dividend distribution of the land to P. Under section 311(b), S has a $30 gain. Under section 301(d), P's basis in the land is $100. On July 1 of Year 3, P sells the land to X for $110.

(b) *Dividend elimination and stock basis adjustments.* Under paragraph (b)(1) of this section, S's distribution to P is an intercompany distribution. Under paragraph (f)(2)(ii) of this section, P's $100 of dividend income is not included in gross income. Under § 1.1502–32, P's basis in S's stock is reduced from $100 to $0 in Year 1.

(c) *Matching rule and stock basis adjustments.* Under the matching rule (treating P as the buying member and S as the selling member), S takes its $30 gain into account in Year 3 to reflect the $30 difference between P's $10 gain taken into account and the $40 recomputed gain. Under § 1.1502–32, P's basis in S's stock is increased from $0 to $30 in Year 3.

(d) *Loss property.* The facts are the same as in paragraph (a) of this *Example 1,* except that S has a $130 (rather than $70) basis in the land. Under paragraph (f)(2)(iii) of this section, the principles of section 311(b) apply to S's loss from the intercompany distribution. Thus, S has a $30 loss that is taken into account under the matching rule in Year 3 to reflect the $30 difference between P's $10 gain taken into account and the $20 recomputed loss. (The results are the same under section 267(f).) Under § 1.1502–32, P's basis in S's stock is reduced from $100 to $0 in Year 1, and from $0 to a $30 excess loss account in Year 3. (If P had distributed the land to its shareholders, rather than selling the land to X, P would take its $10 gain under section 311(b) into account, and S would take its $30 loss into account under the matching rule with $10 offset by P's gain and $20 recharacterized as a noncapital, nondeductible amount.)

(e) *Entitlement rule.* The facts are the same as in paragraph (a) of this *Example 1,* except that, after P becomes entitled to the distribution but before the distribution is made, S issues additional stock to the public and becomes a nonmember. Under paragraph (f)(2)(i) of this section, the determination of whether a distribution is an intercompany distribution is made under the entitlement rule of paragraph (f)(2)(iv) of this section. Treating S's distribution as made when P becomes entitled to it results in the distribution being an intercompany distribution. Under paragraph (f)(2)(ii) of this section, the distribution is not included in P's gross income. S's $30 gain from the distribution is intercompany gain that is taken into account under the acceleration rule immediately before S becomes a nonmember. Thus, there is a net $70 decrease in P's basis in its S stock under § 1.1502–32 ($100 decrease for the distribution and a $30 increase for S's $30 gain). Under paragraph (f)(2)(iv) of this section, P does not take the distribution into account again under separate return rules when received, and P is not entitled to a dividends received deduction.

Example 2. Excess loss accounts. (a) *Facts.* S owns all of T's only class of stock with a $10 basis and $100 value. S has substantial earnings and profits, and T has $10 of earnings and profits. On January 1 of Year 1, S declares and distributes a dividend of all of the T stock to P. Under section 311(b), S has a $90 gain. Under section 301(d), P's basis in the T stock is $100. During Year 3, T borrows $90 and declares and makes a $90 distribution to P to which section 301 applies, and P's basis in the T stock is reduced under § 1.1502–32 from $100 to $10. During Year 6, T has $5 of earnings that increase P's basis in the T stock under § 1.1502–32 from $10 to $15. On December 1 of Year 9, T issues additional stock to X and, as a result, T becomes a nonmember.

(b) *Dividend exclusion.* Under paragraph (f)(2)(ii) of this section, P's $100 of dividend income from S's distribution of the T stock, and its $10 of dividend income from T's $90 distribution, are not included in gross income.

(c) *Matching and acceleration rules.* Under § 1.1502–19(b)(1), when T becomes a nonmember P must include in income the amount of its excess loss account (if any) in T stock. P has no excess loss account in the T stock. Therefore P's corresponding item from the deconsolidation of T is $0. Treating S and P as divisions of a single corporation, the T stock would continue to have a $10 basis after the distribution, and the adjustments under § 1.1502–32 for T's $90 distribution and $5 of earnings would result in a $75 excess loss account. Thus, the recomputed corresponding item from the deconsolidation

is $75. Under the matching rule, S takes $75 of its $90 gain into account in Year 9 as a result of T becoming a nonmember, to reflect the difference between P's $0 gain taken into account and the $75 recomputed gain. S's remaining $15 of gain is taken into account under the matching and acceleration rules based on subsequent events (for example, under the matching rule if P subsequently sells its T stock, or under the acceleration rule if S becomes a nonmember).

(d) *Reverse sequence.* The facts are the same as in paragraph (a) of this *Example 2,* except that T borrows $90 and makes its $90 distribution to S before S distributes T's stock to P. Under paragraph (f)(2)(ii) of this section, T's $90 distribution to S ($10 of which is a dividend) is not included in S's gross income. The corresponding negative adjustment under § 1.1502–32 reduces S's basis in the T stock from $10 to an $80 excess loss account. Under section 311(b), S has a $90 gain from the distribution of T stock to P. Under section 301(d) P's initial basis in the T stock is $10 (the stock's fair market value), and the basis increases to $15 under § 1.1502–32 as a result of T's earnings in Year 6. The timing and attributes of S's gain are determined in the manner provided in paragraph (c) of this *Example 2.* Thus, $75 of S's gain is taken into account under the matching rule in Year 9 as a result of T becoming a nonmember, and the remaining $15 is taken into account under the matching and acceleration rules based on subsequent events.

(e) *Partial stock sale.* The facts are the same as in paragraph (a) of this *Example 2,* except that P sells 10% of T's stock to X on December 1 of Year 9 for $1.50 (rather than T's issuing additional stock and becoming a nonmember). Under the matching rule, S takes $9 of its gain into account to reflect the difference between P's $0 gain taken into account ($1.50 sale proceeds minus $1.50 basis) and the $9 recomputed gain ($1.50 sale proceeds plus $7.50 excess loss account).

(f) *Loss, rather than cash distribution.* The facts are the same as in paragraph (a) of this *Example 2,* except that T retains the loan proceeds and incurs a $90 loss in Year 3 that is absorbed by the group. The timing and attributes of S's gain are determined in the same manner provided in paragraph (c) of this *Example 2.* Under § 1.1502–32, the loss in Year 3 reduces P's basis in the T stock from $100 to $10, and T's $5 of earnings in Year 6 increase the basis to $15. Thus, $75 of S's gain is taken into account under the matching rule in Year 9 as a result of T becoming a nonmember, and the remaining $15 is taken into account under the matching and acceleration rules based on subsequent events. (The timing and attributes of S's gain would be determined in the same manner provided in paragraph (d) of this *Example 2* if T incurred the $90 loss before S's distribution of the T stock to P.)

(g) *Stock sale, rather than stock distribution.* The facts are the same as in paragraph (a) of this *Example 2,* except that S sells the T stock to P for $100 (rather than distributing the stock). The timing and attributes of S's gain are determined in the same manner provided in paragraph (c) of this *Example 2.* Thus, $75 of S's gain is taken into account under the matching rule in Year 9 as a result of T becoming a nonmember, and the remaining $15 is taken into account under the matching and acceleration rules based on subsequent events.

Example 3. Intercompany reorganization. (a) *Facts.* P forms S and B by contributing $200 to the capital of each. During Years 1 through 4, S and B each earn $50, and under § 1.1502–32 P adjusts its basis in the stock of each to $250. (See § 1.1502–33 for adjustments to earnings and profits.) On January 1 of Year 5, the fair market value of S's assets and its stock is $500, and S merges into B in a tax-free reorganization. Pursuant to the plan of reorganization, P receives B stock with a fair market value of $350 and $150 of cash.

(b) *Treatment as a section 301 distribution.* The merger of S into B is a transaction to which paragraph (f)(3) of this section applies. P is treated as receiving additional B stock with a fair market value of $500 and, under section 358, a basis of $250. Immediately after the merger, $150 of the stock received is treated as redeemed, and the redemption is treated under section 302(d) as a distribution to which section 301 applies. Because the $150 distribution is treated as not received as part of the merger, section 356 does not apply and no basis adjustments are required under section 358(a)(1)(A) and (B). Because B is treated under section 381(c)(2) as receiving S's earnings and profits and the redemption is treated as occurring after the merger, $100 of the distribution is treated as a dividend under section 301 and P's basis in the B stock is reduced correspondingly under § 1.1502–32. The remaining $50 of the distribution reduces P's basis in the B stock. Section 301(c)(2) and § 1.1502–32. Under paragraph (f)(2)(ii) of this section, P's $100 of dividend income is not included in gross income. Under § 1.302–2(c), proper adjustments are made to P's basis in its B stock to reflect its basis in the B stock redeemed, with the result that P's basis in the B stock is reduced by the entire $150 distribution.

(c) *Depreciated property.* The facts are the same as in paragraph (a) of this *Example 3,* except that property of S with a $200 basis and $150 fair market value is distributed to P (rather than cash of B). As in paragraph (b) of this *Example 3,* P is treated as receiving additional B stock in the merger and a $150 distribution to which section 301 applies immediately after the merger. Under paragraph (f)(2)(iii) of this section, the principles of section 311(b) apply to B's $50 loss and the loss

is taken into account under the matching and acceleration rules based on subsequent events (e.g., under the matching rule if P subsequently sells the property, or under the acceleration rule if B becomes a nonmember). The results are the same under section 267(f).

(d) *Divisive transaction.* Assume instead that, pursuant to a plan, S distributes the stock of a lower-tier subsidiary in a spin-off transaction to which section 355 applies together with $150 of cash. The distribution of stock is a transaction to which paragraph (f)(3) of this section applies. P is treated as receiving the $150 of cash immediately before the section 355 distribution, as a distribution to which section 301 applies. Section 356(b) does not apply and no basis adjustments are required under section 358(a)(1) (A) and (B). Because the $150 distribution is treated as made before the section 355 distribution, the distribution reduces P's basis in the S stock under §1.1502–32, and the basis allocated under section 358(c) between the S stock and the lower-tier subsidiary stock received reflects this basis reduction.

Example 4. Stock redemptions and distributions. (a) *Facts.* Before becoming a member of the P group, S owns P stock with a $30 basis. On January 1 of Year 1, P buys all of S's stock. On July 1 of Year 3, P redeems the P stock held by S for $100 in a transaction to which section 302(a) applies.

(b) *Gain under section 302.* Under paragraph (f)(4) of this section, P's basis in the P stock acquired from S is treated as eliminated. As a result of this elimination, S's intercompany item will never be taken into account under the matching rule because P's basis in the stock does not reflect S's intercompany item. Therefore, S's $70 gain is taken into account under the acceleration rule in Year 3. The attributes of S's item are determined under paragraph (d)(1)(ii) of this section by applying the matching rule as if P had sold the stock to an affiliated corporation that is not a member of the group at no gain or loss. Although P's corresponding item from a sale of its stock would have been excluded from gross income under section 1032, paragraph (c)(6)(ii) of this section prevents S's gain from being treated as excluded from gross income; instead S's gain is capital gain.

(c) *Gain under section 311.* The facts are the same as in paragraph (a) of this *Example 4,* except that S distributes the P stock to P in a transaction to which section 301 applies (rather than the stock being redeemed), and S has a $70 gain under section 311(b). The timing and attributes of S's gain are determined in the manner provided in paragraph (b) of this *Example 4.*

(d) *Loss stock.* The facts are the same as in paragraph (a) of this *Example 4,* except that S has a $130 (rather than $30) basis in the P stock and has a $30 loss under section 302(a). The limitation under paragraph (c)(6)(ii) of this section does not apply to intercompany losses. Thus, S's loss is taken into account in Year 3 as a noncapital, nondeductible amount.

Example 5. Intercompany stock sale followed by section 332 liquidation. (a) *Facts.* S owns all of the stock of T, with a $70 basis and $100 value, and T's assets have a $10 basis and $100 value. On January 1 of Year 1, S sells all of T's stock to B for $100. On July 1 of Year 3, when T's assets are still worth $100, T distributes all of its assets to B in an unrelated complete liquidation to which section 332 applies.

(b) *Timing and attributes.* Under paragraph (b)(3)(ii) of this section, B's unrecognized gain or loss under section 332 is a corresponding item for purposes of applying the matching rule. In Year 3 when T liquidates, B has $0 of unrecognized gain or loss under section 332 because B has a $100 basis in the T stock and receives a $100 distribution with respect to its T stock. Treating S and B as divisions of a single corporation, the recomputed corresponding item would have been $30 of unrecognized gain under section 332 because B would have succeeded to S's $70 basis in the T stock. Thus, under the matching rule, S's $30 intercompany gain is taken into account in Year 3 as a result of T's liquidation. Under paragraph (c)(1)(i) of this section, the attributes of S's gain and B's corresponding item are redetermined as if S and B were divisions of a single corporation. Although S's gain ordinarily would be redetermined to be treated as excluded from gross income to reflect the nonrecognition of B's gain under section 332, S's gain remains capital gain because B's unrecognized gain under section 332 is not permanently and explicitly disallowed under the Code. See paragraph (c)(6)(ii) of this section. However, relief may be elected under paragraph (f)(5)(ii) of this section.

(c) *Intercompany sale at a loss.* The facts are the same as in paragraph (a) of this *Example 5,* except that S has a $130 (rather than $70) basis in the T stock. The limitation under paragraph (c)(6)(ii) of this section does not apply to intercompany losses. Thus, S's intercompany loss is taken into account in Year 3 as a noncapital, nondeductible amount. However, relief may be elected under paragraph (f)(5)(ii) of this section.

Example 6. Intercompany stock sale followed by section 355 distribution. (a) *Facts.* S owns all of the stock of T with a $70 basis and a $100 value. On January 1 of Year 1, S sells all of T's stock to M for $100. On June 1 of Year 6, M distributes all of its T stock to its nonmember shareholders in a transaction to which section 355 applies. At the time of the distribution, M has a basis in T stock of $100 and T has a value of $150.

(b) *Timing and attributes.* Under paragraph (b)(3)(ii) of this section, M's $50 gain not recognized on the distribution under section 355

is a corresponding item. Treating S and M as divisions of a single corporation, the recomputed corresponding item would be $80 of unrecognized gain under section 355 because M would have succeeded to S's $70 basis in the T stock. Thus, under the matching rule, S's $30 intercompany gain is taken into account in Year 6 as a result of the distribution. Under paragraph (c)(1)(i) of this section, the attributes of S's intercompany item and M's corresponding item are redetermined to produce the same effect on consolidated taxable income as if S and M were divisions of a single corporation. Although S's gain ordinarily would be redetermined to be treated as excluded from gross income to reflect the nonrecognition of M's gain under section 355(c), S's gain remains capital gain because M's unrecognized gain under section 355(c) is not permanently and explicitly disallowed under the Code. See paragraph (c)(6)(ii) of this section. Because M's distribution of the T stock is not an intercompany transaction, relief is not available under paragraph (f)(5)(ii) of this section.

(c) *Section 355 distribution within the group.* The facts are the same as under paragraph (a) of this *Example 6,* except that M distributes the T stock to B (another member of the group), and B takes a $75 basis in the T stock under section 358. Under paragraph (j)(2) of this section, B is a successor to M for purposes of taking S's intercompany gain into account, and therefore both M and B might have corresponding items with respect to S's intercompany gain. To the extent it is possible, matching with respect to B's corresponding items produces the result most consistent with treating S, M, and B as divisions of a single corporation. See paragraphs (j)(3) and (j)(4) of this section. However, because there is only $5 difference between B's $75 basis in the T stock and the $70 basis the stock would have if S, M, and B were divisions of a single corporation, only $5 can be taken into account under the matching rule with respect to B's corresponding items. (This $5 is taken into account with respect to B's corresponding items based on subsequent events.) The remaining $25 of S's $30 intercompany gain is taken into account in Year 6 under the matching rule with respect to M's corresponding item from its distribution of the T stock. The attributes of S's remaining $25 of gain are determined in the same manner as in paragraph (b) of this *Example 6.*

(d) *Relief elected.* The facts are the same as in paragraph (c) of this *Example 6* except that P elects relief pursuant to paragraph (f)(5)(ii)(D) of this section. As a result of the election, M's distribution of the T stock is treated as subject to sections 301 and 311 instead of section 355. Accordingly, M recognizes $50 of intercompany gain from the distribution, B takes a basis in the stock equal to its fair market value of $150, and S and M take their intercompany gains into account with respect to B's corresponding items based on subsequent events. (None of S's gain is taken into account in Year 6 as a result of M's distribution of the T stock.)

(g) *Obligations of members*—(1) *In general.* In addition to the general rules of this section, the rules of this paragraph (g) apply to intercompany obligations.

(2) *Definitions.* For purposes of this section—

(i) *Obligation of a member.* An obligation of a member is—

(A) Any obligation of the member constituting indebtedness under general principles of Federal income tax law (for example, under nonstatutory authorities, or under section 108, section 163, section 171, or section 1275), but not an executory obligation to purchase or provide goods or services; and

(B) Any security of the member described in section 475(c)(2)(D) or (E), and any comparable security with respect to commodities, but not if the security is a position with respect to the member's stock. See paragraphs (f)(4) and (6) of this section for special rules applicable to positions with respect to a member's stock.

(ii) *Intercompany obligations.* An intercompany obligation is an obligation between members, but only for the period during which both parties are members.

(3) *Deemed satisfaction and reissuance of intercompany obligations*—(i) *Application*—(A) *In general.* If a member realizes an amount (other than zero) of income, gain, deduction, or loss, directly or indirectly, from the assignment or extinguishment of all or part of its remaining rights or obligations under an intercompany obligation, the intercompany obligation is treated for all Federal income tax purposes as satisfied under paragraph (g)(3)(ii) of this section and, if it remains outstanding, reissued under paragraph (g)(3)(iii) of this section. Similar principles apply under this paragraph (g)(3) if a member realizes any such amount, directly or indirectly, from a comparable transaction (for example, a marking-to-market of an obligation or a bad debt deduction), or if an intercompany obligation becomes an obligation that is not

an intercompany obligation. For purposes of the preceding sentence, a reduction of the basis of an intercompany obligation pursuant to sections 108 and 1017 and 1.1502–28 is not a comparable transaction. Notwithstanding paragraph (l) of this section, the preceding sentence applies to transactions or events occurring during a taxable year the original return for which is due (without regard to extensions) after March 21, 2005. For transactions or events occurring during a taxable year the original return for which is due (without regard to extensions) on or before March 21, 2005, and after March 12, 2004, see §1.1502–13T(g)(3)(ii)(B)(*3*) as contained in 26 CFR part 1 revised as of April 1, 2004.

(B) *Exceptions.* This paragraph (g)(3) does not apply to an obligation if any of the following applies:

(*1*) The obligation became an intercompany obligation by reason of an event described in §1.108–2(e) (exceptions to the application of section 108(e)(4)).

(*2*) The amount realized is from reserve accounting under section 585 or section 593 (see paragraph (g)(3)(iv) of this section for special rules).

(*3*) The amount realized is from the conversion of an obligation into stock of the obligor.

(*4*) Treating the obligation as satisfied and reissued will not have a significant effect on any person's Federal income tax liability for any year. For this purpose, obligations issued in connection with the same transaction or related transactions are treated as a single obligation. However, this paragraph (g)(3)(i)(B)(*4*) does not apply to any obligation if the aggregate effect of this treatment for all obligations in a year would be significant.

(ii) *Satisfaction*—(A) *General rule.* If a creditor member sells intercompany debt for cash, the debt is treated as satisfied by the debtor immediately before the sale for the amount of the cash. For other transactions, similar principles apply to treat the intercompany debt as satisfied immediately before the transaction. Thus, if the debt is transferred for property, it is treated as satisfied for an amount consistent with the amount for which the debt is deemed reissued under paragraph (g)(3)(iii) of this section, and the basis of the property is also adjusted to reflect that amount. If this paragraph (g)(3) applies because the debtor or creditor becomes a nonmember, the obligation is treated as satisfied for cash in an amount equal to its fair market value immediately before the debtor or creditor becomes a nonmember. Similar principles apply to intercompany obligations other than debt.

(B) *Timing and attributes.* For purposes of applying the matching rule and the acceleration rule—

(*1*) Paragraph (c)(6)(ii) of this section (limitation on treatment of intercompany income or gain as excluded from gross income) does not apply to prevent any intercompany income or gain from being excluded from gross income;

(*2*) Paragraph (c)(6)(i) of this section (treatment of intercompany items if corresponding items are excluded or nondeductible) will not apply to exclude any amount of income or gain attributable to a reduction of the basis of an intercompany obligation pursuant to sections 108 and 1017 and §1.1502–28; and

(*3*) Any gain or loss from an intercompany obligation is not subject to section 108(a), section 354 or section 1091.

(C) *Effective date.* Notwithstanding paragraph (l) of this section, paragraph (g)(3)(ii)(B) of this section applies to transactions or events occurring during a taxable year the original return for which is due (without regard to extensions) after March 12, 2004. For transactions or events occurring during a taxable year the original return for which is due (without regard to extensions) on or before March 12, 2004, see §1.1502–13(g)(3)(ii)(B) as contained in 26 CFR part 1 revised as of April 1, 2003.

(iii) *Reissuance.* If a creditor member sells intercompany debt for cash, the debt is treated as a new debt (with a new holding period) issued by the debtor immediately after the sale for the amount of cash. For other transactions, if the intercompany debt remains outstanding, similar principles apply to treat the debt as reissued immediately after the transaction. Thus, if the debt is transferred for property,

it is treated as new debt issued for the property. See, for example, section 1273(b)(3) or section 1274. If this paragraph (g)(3) applies because the debtor or creditor becomes a nonmember, the debt is treated as new debt issued for an amount of cash equal to its fair market value immediately after the debtor or creditor becomes a nonmember. Similar principles apply to intercompany obligations other than debt.

(iv) *Bad debt reserve.* A member's deduction under section 585 or section 593 for an addition to its reserve for bad debts with respect to an intercompany obligation is not taken into account, and is not treated as realized under this paragraph (g)(3) until the intercompany obligation becomes an obligation that is not an intercompany obligation, or, if earlier, the redemption or cancellation of the intercompany obligation.

(4) *Deemed satisfaction and reissuance of obligations becoming intercompany obligations*—(i) *Application*—(A) *In general.* This paragraph (g)(4) applies if an obligation that is not an intercompany obligation becomes an intercompany obligation.

(B) *Exceptions.* This paragraph (g)(4) does not apply to an obligation if—

(*1*) The obligation becomes an intercompany obligation by reason of an event described in §1.108–2(e) (exceptions to the application of section 108(e)(4)); or

(*2*) Treating the obligation as satisfied and reissued will not have a significant effect on any person's Federal income tax liability for any year. For this purpose, obligations issued in connection with the same transaction or related transactions are treated as a single obligation. However, this paragraph (g)(4)(i)(B)(*2*) does not apply to any obligation if the aggregate effect of this treatment for all obligations in a year would be significant.

(ii) *Intercompany debt.* If this paragraph (g)(4) applies to an intercompany debt—

(A) Section 108(e)(4) does not apply;

(B) The debt is treated for all Federal income tax purposes, immediately after it becomes an intercompany debt, as satisfied and a new debt issued to the holder (with a new holding period) in an amount determined under the principles of §1.108–2(f);

(C) The attributes of all items taken into account from the satisfaction are determined on a separate entity basis, rather than by treating S and B as divisions of a single corporation;

(D) Any intercompany gain or loss taken into account is treated as not subject to section 354 or section 1091; and

(E) Solely for purposes of §1.1502–32(b)(4) and the effect of any election under that provision, any loss taken into account under this paragraph (g)(4) by a corporation that becomes a member as a result of the transaction in which the obligation becomes an intercompany obligation is treated as a loss carryover from a separate return limitation year.

(iii) *Other intercompany obligations.* If this paragraph (g)(4) applies to an intercompany obligation other than debt, the principles of paragraph (g)(4)(ii) of this section apply to treat the intercompany obligation as satisfied and reissued for an amount of cash equal to its fair market value immediately after the obligation becomes an intercompany obligation.

(5) *Examples.* The application of this section to obligations of members is illustrated by the following examples.

Example 1. Interest on intercompany debt. (a) *Facts.* On January 1 of Year 1, B borrows $100 from S in return for B's note providing for $10 of interest annually at the end of each year, and repayment of $100 at the end of Year 5. B fully performs its obligations. Under their separate entity methods of accounting, B accrues a $10 interest deduction annually under section 163, and S accrues $10 of interest income annually under section 61(a)(4).

(b) *Matching rule.* Under paragraph (b)(1) of this section, the accrual of interest on B's note is an intercompany transaction. Under the matching rule, S takes its $10 of income into account in each of Years 1 through 5 to reflect the $10 difference between B's $10 of interest expense taken into account and the $0 recomputed expense. S's income and B's deduction are ordinary items. (Because S's intercompany item and B's corresponding item would both be ordinary on a separate entity basis, the attributes are not redetermined under paragraph (c)(1)(i) of this section.)

(c) *Original issue discount.* The facts are the same as in paragraph (a) of this *Example 1*, except that B borrows $90 (rather than $100)

from S in return for B's note providing for $10 of interest annually and repayment of $100 at the end of Year 5. The principles described in paragraph (b) of this *Example 1* for stated interest also apply to the $10 of original issue discount. Thus, as B takes into account its corresponding expense under section 163(e), S takes into account its intercompany income. S's income and B's deduction are ordinary items.

(d) *Tax-exempt income.* The facts are the same as in paragraph (a) of this *Example 1,* except that B's borrowing from S is allocable under section 265 to B's purchase of state and local bonds to which section 103 applies. The timing of S's income is the same as in paragraph (b) of this *Example 1.* Under paragraph (c)(4)(i) of this section, the attributes of B's corresponding item of disallowed interest expense control the attributes of S's offsetting intercompany interest income. Paragraph (c)(6)(ii) of this section does not prevent the redetermination of S's intercompany item as excluded from gross income, because section 265 permanently and explicitly disallows B's corresponding deduction. Accordingly, S's intercompany income is treated as excluded from gross income.

Example 2. Intercompany debt becomes nonintercompany debt. (a) *Facts.* On January 1 of Year 1, B borrows $100 from S in return for B's note providing for $10 of interest annually at the end of each year, and repayment of $100 at the end of Year 20. As of January 1 of Year 3, B has paid the interest accruing under the note and S sells B's note to X for $70, reflecting a change in the value of the note as a result of increases in prevailing market interest rates. B is never insolvent within the meaning of section 108(d)(3).

(b) *Deemed satisfaction.* Under paragraph (g)(3) of this section, B's note is treated as satisfied for $70 immediately before S's sale to X. As a result of the deemed satisfaction of the obligation for less than its adjusted issue price, B takes into account $30 of discharge of indebtedness income under section 61(a)(12). On a separate entity basis, S's $30 loss would be a capital loss under section 1271(a)(1). Under the matching rule, however, the attributes of S's intercompany item and B's corresponding item must be redetermined to produce the same effect as if the transaction had occurred between divisions of a single corporation. B's corresponding item completely offsets S's intercompany item in amount. Accordingly, under paragraph (c)(4)(i) of this section, the attributes of B's $30 of discharge of indebtedness income control the attributes of S's loss. Thus, S's loss is treated as ordinary loss.

(c) *Deemed reissuance.* Under paragraph (g)(3) of this section, B is also treated as reissuing, directly to X, a new note with a $70 issue price and a $100 stated redemption price at maturity. The new note is not an intercompany obligation, it has a $70 issue price and $100 stated redemption price at maturity, and the $30 of original issue discount will be taken into account by B and X under sections 163(e) and 1272.

(d) *Creditor deconsolidation.* The facts are the same as in paragraph (a) of this *Example 2,* except that P sells S's stock to X (rather than S's selling the note of B). Under paragraph (g)(3) of this section, the note is treated as satisfied by B for its $70 fair market value immediately before S becomes a nonmember, and B is treated as reissuing a new note to S immediately after S becomes a nonmember. The results for S's $30 of loss and B's discharge of indebtedness income are the same as in paragraph (b) of this *Example 2.* The new note is not an intercompany obligation, it has a $70 issue price and $100 stated redemption price at maturity, and the $30 of original issue discount will be taken into account by B and S under sections 163(e) and 1272.

(e) *Debtor deconsolidation.* The facts are the same as in paragraph (a) of this *Example 2,* except that P sells B's stock to X (rather than S's selling the note of B). The results are the same as in paragraph (d) of this *Example 2.*

(f) *Appreciated note.* The facts are the same as in paragraph (a) of this *Example 2,* except that S sells B's note to X for $130 (rather than $70), reflecting a decline in prevailing market interest rates. Under paragraph (g)(3) of this section, B's note is treated as satisfied for $130 immediately before S's sale of the note to X. Under § 1.163–7(c), B takes into account $30 of repurchase premium. On a separate entity basis, S's $30 gain would be a capital gain under section 1271(a)(1), and B's $30 premium deduction would be an ordinary deduction. Under the matching rule, however, the attributes of S's intercompany item and B's corresponding item must be redetermined to produce the same effect as if the transaction had occurred between divisions of a single corporation. Under paragraph (c)(4)(i) of this section, the attributes of B's corresponding premium deduction control the attributes of S's intercompany gain. Accordingly, S's gain is treated as ordinary income. B is also treated as reissuing a new note directly to X which is not an intercompany obligation. The new note has a $130 issue price and a $100 stated redemption price at maturity. Under § 1.61–12(c), B's $30 premium income under the new note is taken into account over the life of the new note.

Example 3. Loss or bad debt deduction with respect to intercompany debt. (a) *Facts.* On January 1 of Year 1, B borrows $100 from S in return for B's note providing for $10 of interest annually at the end of each year, and repayment of $100 at the end of Year 5. In Year 3, S sells B's note to P for $60. B is never insolvent within the meaning of section 108(d)(3). Assume B's note is not a security within the meaning of section 165(g)(2).

(b) *Deemed satisfaction and reissuance.* Under paragraph (g)(3) of this section, B is treated as satisfying its note for $60 immediately before the sale, and reissuing a new note directly to P with a $60 issue price and a $100 stated redemption price at maturity. On a separate entity basis, S's $40 loss would be a capital loss, and B's $40 income would be ordinary income. Under the matching rule, however, the attributes of S's intercompany item and B's corresponding item must be redetermined to produce the same effect as if the transaction had occurred between divisions of a single corporation. Under paragraph (c)(4)(i) of this section, the attributes of B's corresponding discharge of indebtedness income control the attributes of S's intercompany loss. Accordingly, S's loss is treated as ordinary loss.

(c) *Partial bad debt deduction.* The facts are the same as in paragraph (a) of this *Example 3,* except that S claims a $40 partial bad debt deduction under section 166(a)(2) (rather than selling the note to P). The results are the same as in paragraph (b) of this *Example 3.* B's note is treated as satisfied and reissued with a $60 issue price. S's $40 intercompany deduction and B's $40 corresponding income are both ordinary.

(d) *Insolvent debtor.* The facts are the same as in paragraph (a) of this *Example 3,* except that B is insolvent within the meaning of section 108(d)(3) at the time that S sells the note to P. On a separate entity basis, S's $40 loss would be capital, B's $40 income would be excluded from gross income under section 108(a), and B would reduce attributes under section 108(b) or section 1017. However, under paragraph (g)(3)(ii)(B) of this section, section 108(a) does not apply to B's income to characterize it as excluded from gross income. Accordingly, the attributes of S's intercompany loss and B's corresponding income are redetermined in the same manner as in paragraph (b) of this *Example 3.*

Example 4. Nonintercompany debt becomes intercompany debt. (a) *Facts.* On January 1 of Year 1, B borrows $100 from X in return for B's note providing for $10 of interest annually at the end of each year, and repayment of $100 at the end of Year 5. As of January 1 of Year 3, B has fully performed its obligations, but the note's fair market value is $70. On January 1 of Year 3, P buys all of X's stock. B is solvent within the meaning of section 108(d)(3).

(b) *Deemed satisfied and reissuance.* Under paragraph (g)(4) of this section, B is treated as satisfying its indebtedness for $70 (determined under the principles of § 1.108–2(f)(2)) immediately after X becomes a member. Both X's $30 capital loss under section 1271(a)(1) and B's $30 of discharge of indebtedness income under section 61(a)(12) are taken into account in determining consolidated taxable income for Year 3. Under paragraph (g)(4)(ii)(C) of this section, the attributes of items resulting from the satisfaction are determined on a separate entity basis. But see section 382 and § 1.1502–15 (as appropriate). B is also treated as reissuing a new note. The new note is an intercompany obligation, it has a $70 issue price and $100 stated redemption price at maturity, and the $30 of original issue discount will be taken into account by B and X in the same manner as provided in paragraph (c) of *Example 1* of this paragraph (g)(5).

(c) *Election to file consolidated returns.* Assume instead that B borrows $100 from S during Year 1, but the P group does not file consolidated returns until Year 3. Under paragraph (g)(4) of this section, B's indebtedness is treated as satisfied and a new note reissued immediately after the debt becomes intercompany debt. The satisfaction and reissuance are deemed to occur on January 1 of Year 3, for the fair market value of the note (determined under the principles of § 1.108–2(f)(2)) at that time.

Example 5. Notional principal contracts. (a) *Facts.* On April 1 of Year 1, M1 enters into a contract with counterparty M2 under which, for a term of five years, M1 is obligated to make a payment to M2 each April 1, beginning in Year 2, in an amount equal to the London Interbank Offered Rate (LIBOR), as determined on the immediately preceding April 1, multiplied by a $1,000 notional principal amount. M2 is obligated to make a payment to M1 each April 1, beginning in Year 2, in an amount equal to 8% multiplied by the same notional principal amount. LIBOR is 7.80% on April 1 of Year 1. On April 1 of Year 2, M2 owes $2 to M1.

(b) *Matching rule.* Under § 1.446–3(d), the net income (or net deduction) from a notional principal contract for a taxable year is included in (or deducted from) gross income. Under § 1.446–3(e), the ratable daily portion of M2's obligation to M1 as of December 31 of Year 1 is $1.50 ($2 multiplied by 275/365). Under the matching rule, M1's net income for Year 1 of $1.50 is taken into account to reflect the difference between M2's net deduction of $1.50 taken into account and the $0 recomputed net deduction. Similarly, the $.50 balance of the $2 of net periodic payments made on April 1 of Year 2 is taken into account for Year 2 in M1's and M2's net income and net deduction from the contract. In addition, the attributes of M1's intercompany income and M2's corresponding deduction are redetermined to produce the same effect as if the transaction had occurred between divisions of a single corporation. Under paragraph (c)(4)(i) of this section, the attributes of M2's corresponding deduction control the attributes of M1's intercompany income. (Although M1 is the selling member with respect to the payment on April 1 of Year 2, it might be the buying member in a subsequent period if it owes the net payment.)

(c) *Dealer.* The facts are the same as in paragraph (a) of this *Example 5,* except that M2 is a dealer in securities, and the contract with M1 is not inventory in the hands of M2. Under section 475, M2 must mark its securities to market at year-end. Assume that under section 475, M2's loss from marking to market the contract with M1 is $100. Under paragraph (g)(3) of this section, M2 is treated as making a $100 payment to M1 to terminate the contract immediately before section 475 is applied. M1's $100 of income from the termination payment is taken into account under the matching rule to reflect M2's deduction under §1.446–3(h). The attributes of M1's intercompany income and M2's corresponding deduction are redetermined to produce the same effect as if the transaction had occurred between divisions of a single corporation. Under paragraph (c)(4)(i) of this section, the attributes of M2's corresponding deduction control the attributes of M1's intercompany income. Accordingly, M1's income is treated as ordinary income. Paragraph (g)(3) of this section also provides that, immediately after section 475 would apply, a new contract is treated as reissued with an upfront payment of $100. Under §1.446–3(f), the deemed $100 up front payment by M1 to M2 is taken into account over the term of the new contract in a manner reflecting the economic substance of the contract (for example, allocating the payment in accordance with the forward rates of a series of cash-settled forward contracts that reflect the specified index and the $1,000 notional principal amount). (The timing of taking items into account is the same if M1, rather than M2, is the dealer subject to the mark-to-market requirement of section 475 at year-end. However in this case, because the attributes of the corresponding deduction control the attributes of the intercompany income, M1's income from the deemed termination payment might be ordinary or capital.)

(h) *Anti-avoidance rules*—(1) *In general.* If a transaction is engaged in or structured with a principal purpose to avoid the purposes of this section (including, for example, by avoiding treatment as an intercompany transaction), adjustments must be made to carry out the purposes of this section.

(2) *Examples.* The anti-avoidance rules of this paragraph (h) are illustrated by the following examples. The examples set forth below do not address common law doctrines or other authorities that might apply to recast a transaction or to otherwise affect the tax treatment of a transaction. Thus, in addition to adjustments under this paragraph (h), the Commissioner can, for example, apply the rules of section 269 or §1.701–2 to disallow a deduction or to recast a transaction.

Example 1. Sale of a partnership interest. (a) *Facts.* S owns land with a $10 basis and $100 value. B has net operating losses from separate return limitation years (SRLYs) subject to limitation under §1.1502–21(c). Pursuant to a plan to absorb the losses without limitation by the SRLY rules, S transfers the land to an unrelated, calendar-year partnership in exchange for a 10% interest in the capital and profits of the partnership in a transaction to which section 721 applies. The partnership does not have a section 754 election in effect. S later sells its partnership interest to B for $100. In the following year, the partnership sells the land to X for $100. Because the partnership does not have a section 754 election in effect, its $10 basis in the land does not reflect B's $100 basis in the partnership interest. Under section 704(c), the partnership's $90 built-in gain is allocated to B, and B's basis in the partnership interest increases to $190 under section 705. In a later year, B sells the partnership interest to a nonmember for $100.

(b) *Adjustments.* Under §1.1502–21(c), the partnership's $90 built-in gain allocated to B ordinarily increases the amount of B's SRLY limitation, and B's $90 loss from its sale of the partnership interest ordinarily is not subject to limitation under the SRLY rules. Because the contribution of property to the partnership and the sale of the partnership interest were part of a plan a principal purpose of which was to achieve a reduction in consolidated tax liability by creating offsetting gain and loss for B while deferring S's intercompany gain, B's allocable share of the partnership's gain from its sale of the land is treated under paragraph (h)(1) of this section as not increasing the amount of B's SRLY limitation.

Example 2. Transitory status as an intercompany obligation. (a) *Facts.* P historically has owned 70% of X's stock and the remaining 30% is owned by unrelated shareholders. On January 1 of Year 1, S borrows $100 from X in return for S's note requiring $10 of interest annually at the end of each year, and repayment of $100 at the end of Year 20. As of January 1 of Year 3, the P group has substantial net operating loss carryovers, and the fair market value of S's note falls to $70 due to an increase in prevailing market interest rates. X is not permitted under section 166(a)(2) to take into account a $30 loss with respect to the note. Pursuant to a plan to permit X to take into account its $30 loss without disposing of the note, P acquires an additional 10% of X's stock, causing X to become a member, and P subsequently resells the 10% interest. X's $30 loss with respect to the note is a net unrealized built-in loss within the meaning of §1.1502–15.

(b) *Adjustments.* Under paragraph (g)(4) of this section, X ordinarily would take into account its $30 loss as a result of the note becoming an intercompany obligation, and S would take into account $30 of discharge of indebtedness income. Under §1.1502–22, X's loss is not combined with items of the other members and the loss would be carried to X's separate return years as a result of X becoming a nonmember. However, the transitory status of S's indebtedness to X as an intercompany obligation is structured with a principal purpose to accelerate the recognition of X's loss. Thus, S's note is treated under paragraph (h)(1) of this section as not becoming an intercompany obligation.

Example 3. Corporate mixing bowl. (a) *Facts.* M1 and M2 are subsidiaries of P. M1 operates a manufacturing business on land it leases from M2. The land is the only asset held by M2. P intends to dispose of the M1 business, including the land owned by M2; P's basis in the M1 stock is equal to the stock's fair market value. M2's land has a value of $20 and a basis of $0 and P has a $0 basis in the stock of M2. In Year 1, with a principal purpose of avoiding gain from the sale of the land (by transferring the land to M1 with a carry-over basis without affecting P's basis in the stock of M1 or M2), M1 and M2 form corporation T; M1 contributes cash in exchange for 80% of the T stock and M2 contributes the land in exchange for 20% of the stock. In Year 3, T liquidates, distributing $20 cash to M2 and the land (plus $60 cash) to M1. Under §1.1502–34, section 332 applies to both M1 and M2. Under section 337, T recognizes no gain or loss from its liquidating distribution of the land to M1. T has neither gain nor loss on its distribution of cash to M2. In Year 4, P sells all of the stock of M1 to X and liquidates M2.

(b) *Adjustments.* A principal purpose for the formation and liquidation of T was to avoid gain from the sale of M2's land. Thus, under paragraph (h)(1) of this section, M2 must take $20 of gain into account when the stock of M1 is sold to X.

Example 4. Partnership mixing bowl. (a) *Facts.* M1 owns a self-created intangible asset with a $0 basis and a fair market value of $100. M2 owns land with a basis of $100 and a fair market value of $100. In Year 1, with a principal purpose of creating basis in the intangible asset (which would be eligible for amortization under section 197), M1 and M2 form partnership PRS; M1 contributes the intangible asset and M2 contributes the land. X, an unrelated person, contributes cash to PRS in exchange for a substantial interest in the partnership. PRS uses the contributed assets in legitimate business activities. Five years and six months later, PRS liquidates, distributing the land to M1, the intangible to M2, and cash to X. The group reports no gain under sections 707(a)(2)(B) and 737(a) and claims that M2's basis in the intangible asset is $100 under section 732 and that the asset is eligible for amortization under section 197.

(b) *Adjustments.* A principal purpose of the formation and liquidation of PRS was to create additional amortization without an offsetting increase in consolidated taxable income by avoiding treatment as an intercompany transaction. Thus, under paragraph (h)(1) of this section, appropriate adjustments must be made.

Example 5. Sale and leaseback. (a) *Facts.* S operates a factory with a $70 basis and $100 value, and has loss carryovers from SRLYs. Pursuant to a plan to take into account the $30 unrealized gain while continuing to operate the factory, S sells the factory to X for $100 and leases it back on a long-term basis. In the transaction, a substantial interest in the factory is transferred to X. The sale and leaseback are not recharacterized under general principles of Federal income tax law. As a result of S's sale to X, the $30 gain is taken into account and increases S's SRLY limitation.

(b) *No adjustments.* Although S's sale was pursuant to a plan to accelerate the $30 gain, it is not subject to adjustment under paragraph (h)(1) of this section. The sale is not treated as engaged in or structured with a principal purpose to avoid the purposes of this section.

(i) [Reserved]

(j) *Miscellaneous operating rules.* For purposes of this section—

(1) *Successor assets.* Any reference to an asset includes, as the context may require, a reference to any other asset the basis of which is determined, directly or indirectly, in whole or in part, by reference to the basis of the first asset.

(2) *Successor persons*—(i) *In general.* Any reference to a person includes, as the context may require, a reference to a predecessor or successor. For this purpose, a predecessor is a transferor of assets to a transferee (the successor) in a transaction—

(A) To which section 381(a) applies;

(B) In which substantially all of the assets of the transferor are transferred to members in a complete liquidation;

(C) In which the successor's basis in assets is determined (directly or indirectly, in whole or in part) by reference to the basis of the transferor, but the transferee is a successor only with respect to the assets the basis of which is so determined; or

(D) Which is an intercompany transaction, but only with respect to assets that are being accounted for by the

transferor in a prior intercompany transaction.

(ii) *Intercompany items.* If the assets of a predecessor are acquired by a successor member, the successor succeeds to, and takes into account (under the rules of this section), the predecessor's intercompany items. If two or more successor members acquire assets of the predecessor, the successors take into account the predecessor's intercompany items in a manner that is consistently applied and reasonably carries out the purposes of this section and applicable provisions of law.

(3) *Multiple triggers.* If more than one corresponding item can cause an intercompany item to be taken into account under the matching rule, the intercompany item is taken into account in connection with the corresponding item most consistent with the treatment of members as divisions of a single corporation. For example, if S sells a truck to B, its intercompany gain from the sale is not taken into account by reference to B's depreciation if the depreciation is capitalized under section 263A as part of B's cost for a building; instead, S's gain relating to the capitalized depreciation is taken into account when the building is sold or as it is depreciated. Similarly, if B purchases appreciated land from S and transfers the land to a lower-tier member in exchange for stock, thereby duplicating the basis of the land in the basis of the stock, items with respect to both the stock and the land can cause S's intercompany gain to be taken into account; if the lower-tier member becomes a nonmember as a result of the sale of its stock, the attributes of S's intercompany gain are determined with respect to the land rather than the stock.

(4) *Multiple or successive intercompany transactions.* If a member's intercompany item or corresponding item affects the accounting for more than one intercompany transaction, appropriate adjustments are made to treat all of the intercompany transactions as transactions between divisions of a single corporation. For example, if S sells property to M, and M sells the property to B, then S, M, and B are treated as divisions of a single corporation for purposes of applying the rules of this section. Similar principles apply with respect to intercompany transactions that are part of the same plan or arrangement. For example, if S sells separate properties to different members as part of the same plan or arrangement, all of the participating members are treated as divisions of a single corporation for purposes of determining the attributes (which might also affect timing) of the intercompany items and corresponding items from each of the properties.

(5) *Acquisition of group*—(i) *Scope.* This paragraph (j)(5) applies only if a consolidated group (the terminating group) ceases to exist as a result of—

(A) The acquisition by a member of another consolidated group of either the assets of the common parent of the terminating group in a reorganization described in section 381(a)(2), or the stock of the common parent of the terminating group; or

(B) The application of the principles of § 1.1502–75(d)(2) or (d)(3).

(ii) *Application.* If the terminating group ceases to exist under circumstances described in paragraph (j)(5)(i) of this section, the surviving group is treated as the terminating group for purposes of applying this section to the intercompany transactions of the terminating group. For example, intercompany items and corresponding items from intercompany transactions between members of the terminating group are taken into account under the rules of this section by the surviving group. This treatment does not apply, however, to members of the terminating group that are not members of the surviving group immediately after the terminating group ceases to exist (for example, under section 1504(a)(3) relating to reconsolidation, or section 1504(c) relating to includible insurance companies).

(6) *Former common parent treated as continuation of group.* If a group terminates because the common parent is the only remaining member, the common parent succeeds to the treatment of the terminating group for purposes of applying this section so long as it neither becomes a member of an affiliated group filing separate returns nor becomes a corporation described in section 1504(b). For example, if the only

subsidiary of the group liquidates into the common parent in a complete liquidation to which section 332 applies, or the common parent merges into the subsidiary and the subsidiary is treated as the common parent's successor under paragraph (j)(2)(i) of this section, the taxable income of the surviving corporation is treated as the group's consolidated taxable income in which the intercompany and corresponding items must be included. See § 1.267(f)–1 for additional rules applicable to intercompany losses or deductions.

(7) *Becoming a nonmember.* For purposes of this section, a member is treated as becoming a nonmember if it has a separate return year (including another group's consolidated return year). A member is not treated as having a separate return year if its items are treated as taken into account in computing the group's consolidated taxable income under paragraph (j)(5) or (6) of this section.

(8) *Recordkeeping.* Intercompany and corresponding items must be reflected on permanent records (including work papers). See also section 6001, requiring records to be maintained. The group must be able to identify from these permanent records the amount, location, timing, and attributes of the items, so as to permit the application of the rules of this section for each year.

(9) *Examples.* The operating rules of this paragraph (j) are illustrated generally throughout this section, and by the following examples.

Example 1. Intercompany sale followed by section 351 transfer to member. (a) *Facts.* S holds land for investment with a basis of $70. On January 1 of Year 1, S sells the land to M for $100. M also holds the land for investment. On July 1 of Year 3, M transfers the land to B in exchange for all of B's stock in a transaction to which section 351 applies. Under section 358, M's basis in the B stock is $100. B holds the land for sale to customers in the ordinary course of business and, under section 362(b), B's basis in the land is $100. On December 1 of Year 5, M sells 20% of the B stock to X for $22. In an unrelated transaction on July 1 of Year 8, B sells 20% of the land for $22.

(b) *Definitions.* Under paragraph (b)(1) of this section, S's sale of the land to M and M's transfer of the land to B are both intercompany transactions. S is the selling member and M is the buying member in the first intercompany transaction, and M is the selling member and B is the buying member in the second intercompany transaction. M has no intercompany items under paragraph (b)(2) of this section. Because B acquired the land in an intercompany transaction, B's items from the land are corresponding items to be taken into account under this section. Under the successor asset rule of paragraph (j)(1) of this section, references to the land include references to M's B stock. Under the successor person rule of paragraph (j)(2) of this section, references to M include references to B with respect to the land.

(c) *Timing and attributes resulting from the stock sale.* Under paragraph (c)(3) of this section, M is treated as owning and selling B's stock for purposes of the matching rule even though, as divisions, M could not own and sell stock in B. Under paragraph (j)(3) of this section, both M's B stock and B's land can cause S's intercompany gain to be taken into account under the matching rule. Thus, S takes $6 of its gain into account in Year 5 to reflect the $6 difference between M's $2 gain taken into account from its sale of B stock and the $8 recomputed gain. Under paragraph (j)(4) of this section, the attributes of this gain are determined by treating S, M, and B as divisions of a single corporation. Under paragraph (c)(1) of this section, S's $6 gain and M's $2 gain are treated as long-term capital gain. The gain would be capital on a separate entity basis (assuming that section 341 does not apply), and this treatment is not inconsistent with treating S, M, and B as divisions of a single corporation because the stock sale and subsequent land sale are unrelated transactions and B remains a member following the sale.

(d) *Timing and attributes resulting from the land sale.* Under paragraph (j)(3) of this section, S takes $6 of its gain into account in Year 8 under the matching rule to reflect the $6 difference between B's $2 gain taken into account from its sale of an interest in the land and the $8 recomputed gain. Under paragraph (j)(4) of this section, the attributes of this gain are determined by treating S, M, and B as divisions of a single corporation and taking into account the activities of S, M, and B with respect to the land. Thus, both S's gain and B's gain might be ordinary income as a result of B's activities. (If B subsequently sells the balance of the land, S's gain taken into account is limited to its remaining $18 of intercompany gain.)

(e) *Sale of successor stock resulting in deconsolidation.* The facts are the same as in paragraph (a) of this *Example 1,* except that M sells 60% of the B stock to X for $66 on December 1 of Year 5 and B becomes a nonmember. Under the matching rule, M's sale of B stock results in $18 of S's gain being taken into account (to reflect the difference between M's $6 gain taken into account and

the $24 recomputed gain). Under the acceleration rule, however, the entire $30 gain is taken into account (to reflect B becoming a nonmember, because its basis in the land reflects M's $100 cost basis from the prior intercompany transaction). Under paragraph (j)(4) of this section, the attributes of S's gain are determined by treating S, M, and B as divisions of a single corporation. Because M's cost basis in the land will be reflected by B as a nonmember, all of S's gain is treated as from the land (rather than a portion being from B's stock), and B's activities with respect to the land might therefore result in S's gain being ordinary income.

Example 2. Intercompany sale of member stock followed by recapitalization. (a) *Facts.* Before becoming a member of the P group, S owns P stock with a basis of $70. On January 1 of Year 1, P buys all of S's stock. On July 1 of Year 3, S sells the P stock to M for $100. On December 1 of Year 5, P acquires M's original P stock in exchange for new P stock in a recapitalization described in section 368(a)(1)(E).

(b) *Timing and attributes.* Although P's basis in the stock acquired from M is eliminated under paragraph (f)(4) of this section, the new P stock received by M is exchanged basis property (within the meaning of section 7701(a)(44)) having a basis under section 358 equal to M's basis in the original P stock. Under the successor asset rule of paragraph (j)(1) of this section, references to M's original P stock include references to M's new P stock. Because it is still possible to take S's intercompany item into account under the matching rule with respect to the successor asset, S's gain is not taken into account under the acceleration rule as a result of the basis elimination under paragraph (f)(4) of this section. Instead, the gain is taken into account based on subsequent events with respect to M's new P stock (for example, a subsequent distribution or redemption of the new stock).

Example 3. Back-to-back intercompany transactions—matching. (a) *Facts.* S holds land for investment with a basis of $70. On January 1 of Year 1, S sells the land to M for $90. M also holds the land for investment. On July 1 of Year 3, M sells the land for $100 to B, and B holds the land for sale to customers in the ordinary course of business. During Year 5, B sells all of the land to customers for $105.

(b) *Timing.* Under paragraph (b)(1) of this section, S's sale of the land to M and M's sale of the land to B are both intercompany transactions. S is the selling member and M is the buying member in the first intercompany transaction, and M is the selling member and B is the buying member in the second intercompany transaction. Under paragraph (j)(4) of this section, S, M and B are treated as divisions of a single corporation for purposes of determining the timing of their items from the intercompany transactions. See also paragraph (j)(2) of this section (B is treated as a successor to M for purposes of taking S's intercompany gain into account). Thus, S's $20 gain and M's $10 gain are both taken into account in Year 5 to reflect the difference between B's $5 gain taken into account with respect to the land and the $35 recomputed gain (the gain that B would have taken into account if the intercompany sales had been transfers between divisions of a single corporation, and B succeeded to S's $70 basis).

(c) *Attributes.* Under paragraphs (j)(4) of this section, the attributes of the intercompany items and corresponding items of S, M, and B are also determined by treating S, M, and B as divisions of a single corporation. For example, the attributes of S's and M's intercompany items are determined by taking B's activities into account.

Example 4. Back-to-back intercompany transactions—acceleration. (a) *Facts.* During Year 1, S performs services for M in exchange for $10 from M. S incurs $8 of employee expenses. M capitalizes the $10 cost of S's services under section 263 as part of M's cost to acquire real property from X. Under its separate entity method of accounting, S would take its income and expenses into account in Year 1. M holds the real property for investment and, on July 1 of Year 5, M sells it to B at a gain. B also holds the real property for investment. On December 1 of Year 8, while B still owns the real property, P sells all of M's stock to X and M becomes a nonmember.

(b) *M's items.* M takes its gain into account immediately before it becomes a nonmember. Because the real property stays in the group, the acceleration rule redetermines the attributes of M's gain under the principles of the matching rule as if B sold the real property to an affiliated corporation that is not a member of the group for a cash payment equal to B's adjusted basis in the real property, and S, M, and B were divisions of a single corporation. Thus, M's gain is capital gain.

(c) *S's items.* Under paragraph (b)(2)(ii) of this section, S includes the $8 of expenses in determining its $2 intercompany income. In Year 1, S takes into account $8 of income and $8 of expenses. Under paragraph (j)(4) of this section, appropriate adjustments must be made to treat both S's performance of services for M and M's sale to B as occurring between divisions of a single corporation. Thus, S's $2 of intercompany income is not taken into account as a result of M becoming a nonmember, but instead will be taken into account based on subsequent events (e.g., under the matching rule based on B's sale of the real property to a nonmember, or under the acceleration rule based on P's sale of the stock of S or B to a nonmember). See the successor person rules of paragraph (j)(2) of this section (B is treated as a successor to M

for purposes of taking S's intercompany income into account).

(d) *Sale of S's stock.* The facts are the same as in paragraph (a) of this *Example 4,* except that P sells all of S's stock (rather than M's stock) and S becomes a nonmember on July 1 of Year 5. S's remaining $2 of intercompany income is taken into account immediately before S becomes a nonmember. Because S's intercompany income is not from an intercompany sale, exchange, or distribution of property, the attributes of the intercompany income are determined on a separate entity basis. Thus, S's $2 of intercompany income is ordinary income. M does not take any of its intercompany gain into account as a result of S becoming a nonmember.

(e) *Intercompany income followed by intercompany loss.* The facts are the same as in paragraph (a) of this *Example 4,* except that M sells the real property to B at a $1 loss (rather than a gain). M takes its $1 loss into account under the acceleration rule immediately before M becomes a nonmember. But see § 1.267(f)–1 (which might further defer M's loss if M and B remain in a controlled group relationship after M becomes a nonmember). Under paragraph (j)(4) of this section appropriate adjustments must be made to treat the group as if both intercompany transactions occurred between divisions of a single corporation. Accordingly, P's sale of M stock also results in S taking into account $1 of intercompany income as capital gain to offset M's $1 of corresponding capital loss. The remaining $1 of S's intercompany income is taken into account based on subsequent events.

Example 5. Successor group. (a) *Facts.* On January 1 of Year 1, B borrows $100 from S in return for B's note providing for $10 of interest annually at the end of each year, and repayment of $100 at the end of Year 20. As of January 1 of Year 3, B has paid the interest accruing under the note. On that date, X acquires all of P's stock and the former P group members become members of the X consolidated group.

(b) *Successor.* Under paragraph (j)(5) of this section, although B's note ceases to be an intercompany obligation of the P group, the note is not treated as satisfied and reissued under paragraph (g) of this section as a result of X's acquisition of P stock. Instead, the X consolidated group succeeds to the treatment of the P group for purposes of paragraph (g) of this section, and B's note is treated as an intercompany obligation of the X consolidated group.

(c) *No subgroups.* The facts are the same as in paragraph (a) of this *Example 5,* except that X simultaneously acquires the stock of S and B from P (rather than X acquiring all of P's stock). Paragraph (j)(5) of this section does not apply to X's acquisitions. Unless an exception described in paragraph (g)(3)(i)(B) applies, B's note is treated as satisfied immediately before S and B become nonmembers, and reissued immediately after they become members of the X consolidated group. The amount at which the note is satisfied and reissued under paragraph (g)(3) of this section is based on the fair market value of the note at the time of P's sales to X. Paragraph (g)(4) of this section does not apply to the reissued B note in the X consolidated group, because the new note is always an intercompany obligation of the X consolidated group.

Example 6. Liquidation—80% distributee. (a) *Facts.* X has had preferred stock described in section 1504(a)(4) outstanding for several years. On January 1 of Year 1, S buys all of X's common stock for $60, and B buys all of X's preferred stock for $40. X's assets have a $0 basis and $100 value. On July 1 of Year 3, X distributes all of its assets to S and B in a complete liquidation. Under § 1.1502–34, section 332 applies to both S and B. Under section 337, X has no gain or loss from its liquidating distribution to S. Under sections 336 and 337(c), X has a $40 gain from its liquidating distribution to B. B has a $40 basis under section 334(a) in the assets received from X, and S has a $0 basis under section 334(b) in the assets received from X.

(b) *Intercompany items from the liquidation.* Under the matching rule, X's $40 gain from its liquidating distribution to B is not taken into account under this section as a result of the liquidation (and therefore is not yet reflected under §§ 1.1502–32 and 1.1502–33). Under the successor person rule of paragraph (j)(2)(i) of this section, S and B are both successors to X. Under section 337(c), X recognizes gain or loss only with respect to the assets distributed to B. Under paragraph (j)(2)(ii) of this section, to be consistent with the purposes of this section, S succeeds to X's $40 intercompany gain. The gain will be taken into account by S under the matching and acceleration rules of this section based on subsequent events. (The allocation of the intercompany gain to S does not govern the allocation of any other attributes.)

Example 7. Liquidation—no 80% distributee. (a) *Facts.* X has only common stock outstanding. On January 1 of Year 1, S buys 60% of X's stock for $60, and B buys 40% of X's stock for $40. X's assets have a $0 basis and $100 value. On July 1 of Year 3, X distributes all of its assets to S and B in a complete liquidation. Under § 1.1502–34, section 332 applies to both S and B. Under sections 336 and 337(c), X has a $100 gain from its liquidating distributions to S and B. Under section 334(b), S has a $60 basis in the assets received from X and B has a $40 basis in the assets received from X.

(b) *Intercompany items from the liquidation.* Under the matching rule, X's $100 intercompany gain from its liquidating distributions to S and B is not taken into account under this section as a result of the liquidation (and therefore is not yet reflected under

§§ 1.1502–32 and 1.1502–33). Under the successor person rule of paragraph (j)(2)(i) of this section, S and B are both successors to X. Under paragraph (j)(2)(ii) of this section, to be consistent with the purposes of this section, S succeeds to X's $40 intercompany gain with respect to the assets distributed to B, and B succeeds to X's $60 intercompany gain with respect to the assets distributed to S. The gain will be taken into account by S and B under the matching and acceleration rules of this section based on subsequent events. (The allocation of the intercompany gain does not govern the allocation of any other attributes.)

(k) *Cross references*—(1) *Section 108.* See § 1.108–3 for the treatment of intercompany deductions and losses as subject to attribute reduction under section 108(b).

(2) *Section 263A(f).* See section 263A(f) and § 1.263A–9(g)(5) for special rules regarding interest from intercompany transactions.

(3) *Section 267(f).* See section 267(f) and § 1.267(f)–1 for special rules applicable to certain losses and deductions from transactions between members of a controlled group.

(4) *Section 460.* See § 1.460–4(j) for special rules regarding the application of section 460 to intercompany transactions.

(5) *Section 469.* See § 1.469–1(h) for special rules regarding the application of section 469 to intercompany transactions.

(6) *§ 1.1502–80.* See § 1.1502–80 for the non-application of certain Internal Revenue Code rules.

(l) *Effective dates*—(1) *In general.* This section applies with respect to transactions occurring in years beginning on or after July 12, 1995. If both this section and prior law apply to a transaction, or neither applies, with the result that items may be duplicated, omitted, or eliminated in determining taxable income (or tax liability), or items may be treated inconsistently, prior law (and not this section) applies to the transaction. For example, S's and B's items from S's sale of property to B which occurs in a consolidated return year beginning before July 12, 1995, are taken into account under prior law, even though B may dispose of the property in a consolidated return year beginning on or after July 12, 1995. Similarly, an intercompany distribution to which a shareholder becomes entitled in a consolidated return year beginning before July 12, 1995, but which is distributed in a consolidated return year beginning on or after that date is taken into account under prior law (generally when distributed), because this section generally takes dividends into account when the shareholder becomes entitled to them but this section does not apply at that time. If application of prior law to S's deferred gain or loss from a deferred intercompany transaction (as defined under prior law) occurring in a consolidated return year beginning prior to July 12, 1995, would be affected by an intercompany transaction (as defined under this section) occurring in a consolidated return year beginning on or after July 12, 1995, S's deferred gain or loss continues to be taken into account as provided under prior law, and the items from the subsequent intercompany transaction are taken into account under this section. Appropriate adjustments must be made to prevent items from being duplicated,omitted, or eliminated in determining taxable income as a result of the application of both this section and prior law to the successive transactions, and to ensure the proper application of prior law.

(2) *Avoidance transactions.* This paragraph (l)(2) applies if a transaction is engaged in or structured on or after April 8, 1994, with a principal purpose to avoid the rules of this section (and instead to apply prior law). If this paragraph (l)(2) applies, appropriate adjustments must be made in years beginning on or after July 12, 1995, to prevent the avoidance, duplication, omission, or elimination of any item (or tax liability), or any other inconsistency with the rules of this section. For example, if S is a dealer in real property and sells land to B on March 16, 1995 with a principal purpose of converting any future appreciation in the land to capital gain, B's gain from the sale of the land on May 11, 1997 might be characterized as ordinary income under this paragraph (l)(2).

(3) *Election for certain stock elimination transactions*—(i) *In general.* A group may elect pursuant to this paragraph (l)(3) to apply this section (including

the elections available under paragraph (f)(5)(ii) of this section) to stock elimination transactions to which prior law would otherwise apply. If an election is made, this section, and not prior law, applies to determine the timing and attributes of S's and B's gain or loss from stock with respect to all stock elimination transactions.

(ii) *Stock elimination transactions.* For purposes of this paragraph (l)(3), a stock elimination transaction is a transaction in which stock transferred from S to B—

(A) Is cancelled or redeemed on or after July 12, 1995;

(B) Is treated as cancelled in a liquidation pursuant to an election under section 338(h)(10) with respect to a qualified stock purchase with an acquisition date on or after July 12, 1995;

(C) Is distributed on or after July 12, 1995; or

(D) Is exchanged on or after July 12, 1995 for stock of a member (determined immediately after the exchange) in a transaction that would cause S's gain or loss from the transfer to be taken into account under prior law.

(iii) *Time and manner of making election.* An election under this paragraph (l)(3) is made by attaching to a timely filed original return (including extensions) for the consolidated return year including July 12, 1995 a statement entitled ''[Insert Name and Employer Identification Number of Common Parent] HEREBY ELECTS THE APPLICATION OF §1.1502–13(l)(3).'' See paragraph (f)(5)(ii)(E) of this section for the manner of electing the relief provisions of paragraph (f)(5)(ii) of this section.

(4) *Prior law.* For transactions occurring in S's years beginning before July 12, 1995, see the applicable regulations issued under section 1502. See §§1.1502–13, 1.1502–13T, 1.1502–14, 1.1502–14T, 1.1502–31, and 1.1502–32 (as contained in the 26 CFR part 1 edition revised as of April 1, 1995).

(5) *Consent to adopt method of accounting.* For intercompany transactions occurring in a consolidated group's first taxable year beginning on or after July 12, 1995, the Commissioner's consent under section 446(e) is hereby granted for any changes in methods of accounting that are necessary solely by reason of the timing rules of this section. Changes in method of accounting for these transactions are to be effected on a cut-off basis.

[T.D. 8597, 60 FR 36685, July 18, 1995, as amended by T.D. 8660, 61 FR 10449, 10450, Mar. 14, 1996; T.D. 8677, 61 FR 33323, June 27, 1996; T.D. 8660, 62 FR 12097, Mar. 14, 1997; T.D. 8677, 62 FR 12542, Mar. 17, 1997; T.D. 8823, 64 FR 36099, July 2, 1999; T.D. 8883, 65 FR 31078, May 16, 2000; T.D. 9025, 67 FR 76985, Dec. 16, 2002; T.D. 9048, 68 FR 12291, Mar. 14, 2003; T.D. 9117, 69 FR 12071, Mar. 15, 2004; T.D. 9192, 70 FR 14403, Mar. 22, 2005]

§ 1.1502–15 SRLY limitation on built-in losses.

(a) *SRLY limitation.* Except as provided in paragraph (f) of this section (relating to built-in losses of the common parent) and paragraph (g) of this section (relating to an overlap with section 382), built-in losses are subject to the SRLY limitation under §§1.1502–21(c) and 1.1502–22(c) (including applicable subgroup principles). Built-in losses are treated as deductions or losses in the year recognized, except for the purpose of determining the amount of, and the extent to which the built-in loss is limited by, the SRLY limitation for the year in which it is recognized. Solely for such purpose, a built-in loss is treated as a hypothetical net operating loss carryover or net capital loss carryover arising in a SRLY, instead of as a deduction or loss in the year recognized. To the extent that a built-in loss is allowed as a deduction under this section in the year it is recognized, it offsets any consolidated taxable income for the year before any loss carryovers or carrybacks are allowed as a deduction. To the extent not so allowed, it is treated as a separate net operating loss or net capital loss carryover or carryback arising in the year of recognition and, under §1.1502–21(c) or 1.1502–22(c), the year of recognition is treated as a SRLY.

(b) *Built-in losses*—(1) *Defined.* If a corporation has a net unrealized built-in loss under section 382(h)(3) (as modified by this section) on the day it becomes a member of the group (whether or not the group is a consolidated group), its deductions and losses are built-in losses under this section to the extent they are treated as recognized built-in losses under section

382(h)(2)(B) (as modified by this section). This paragraph (b) generally applies separately with respect to each member, but see paragraph (c) of this section for circumstances in which it is applied on a subgroup basis.

(2) *Operating rules.* Solely for purposes of applying paragraph (b)(1) of this section, the principles of § 1.1502–94(c) apply with appropriate adjustments, including the following:

(i) *Stock acquisition.* A corporation is treated as having an ownership change under section 382(g) on the day the corporation becomes a member of a group, and no other events (e.g., a subsequent ownership change under section 382(g) while it is a member) are treated as causing an ownership change.

(ii) *Asset acquisition.* In the case of an asset acquisition by a group, the assets and liabilities acquired directly from the same transferor (whether corporate or non-corporate, foreign or domestic) pursuant to the same plan are treated as the assets and liabilities of a corporation that becomes a member of the group (and has an ownership change) on the date of the acquisition.

(iii) *Recognized built-in gain or loss.* A loss that is included in the determination of net unrealized built-in gain or loss and that is recognized but disallowed or deferred (e.g., under §§ 1.337(d)–2, 1.1502–35, or section 267) is not treated as a built-in loss unless and until the loss would be allowed during the recognition period without regard to the application of this section. Section 382(h)(1)(B)(ii) does not apply to the extent it limits the amount of recognized built-in loss that may be treated as a pre-change loss to the amount of the net unrealized built-in loss.

(c) *Built-in losses of subgroups*—(1) *In general.* In the case of a subgroup, the principles of paragraph (b) of this section apply to the subgroup, and not separately to its members. Thus, the net unrealized built-in loss and recognized built-in loss for purposes of paragraph (b) of this section are based on the aggregate amounts for each member of the subgroup.

(2) *Members of subgroups.* A subgroup is composed of those members that have been continuously affiliated with each other for the 60 consecutive month period ending immediately before they become members of the group in which the loss is recognized. A member remains a member of the subgroup until it ceases to be affiliated with the loss member. For this purpose, the principles of § 1.1502–21(c)(2)(iv) through (vi) apply with appropriate adjustments.

(3) *Coordination of 60 month affiliation requirement with the overlap rule.* If one or more corporations become members of a group and are included in the determination of a net unrealized built-in loss that is subject to the overlap rule described in paragraph (g)(1) of this section, then for purposes of paragraph (c)(2) of this section, such corporations that become members of the group are treated as having been affiliated for 60 consecutive months with the common parent of the group and are also treated as having been affiliated with any other members who have been affiliated or are treated as having been affiliated with the common parent at such time. The corporations are treated as having been affiliated with such other members for the same period of time that those members have been affiliated or are treated as having been affiliated with the common parent. If two or more corporations become members of the group at the same time, but this paragraph (c)(3) does not apply to every such corporation, then immediately after the corporations become members of the group, and solely for purposes of paragraph (c)(2) of this section, the corporations to which this paragraph (c)(3) applies are treated as having not been previously affiliated with the corporations to which this paragraph (c)(3) does not apply. If the common parent has become the common parent of an existing group within the previous five year period in a transaction described in § 1.1502–75(d)(2)(ii) or (3), the principles of §§ 1.1502–91(g)(6) and 1.1502–96(a)(2)(iii) shall apply.

(4) *Built-in amounts.* Solely for purposes of determining whether the subgroup has a net unrealized built-in loss or whether it has a recognized built-in loss, the principles of § 1.1502–91(g) and (h) apply with appropriate adjustments.

(d) *Examples.* For purposes of the examples in this section, unless otherwise stated, all groups file consolidated

returns, all corporations have calendar taxable years, the facts set forth the only corporate activity, value means fair market value and the adjusted basis of each asset equals its value, all transactions are with unrelated persons, and the application of any limitation or threshold under section 382 is disregarded. The principles of this section are illustrated by the following examples:

Example 1. Determination of recognized built-in loss. (i) Individual A owns all of the stock of P and T. T has two depreciable assets. Asset 1 has an unrealized loss of $55 (basis $75, value $20), and asset 2 has an unrealized gain of $20 (basis $30, value $50). P acquires all the stock of T from Individual A during Year 1, and T becomes a member of the P group. P's acquisition of T is not an ownership change as defined by section 382(g). Paragraph (g) of this section does not apply because there is not an overlap of the application of the rules contained in paragraph (a) of this section and section 382.

(ii) Under paragraph (b)(2)(i) of this section, and solely for purposes of applying paragraph (b)(1) of this section, T is treated as having an ownership change under section 382(g) on becoming a member of the P group. Under paragraph (b)(1) of this section, none of T's $55 of unrealized loss is treated as a built-in loss unless T has a net unrealized built-in loss under section 382(h)(3) on becoming a member of the P group.

(iii) Under section 382(h)(3)(A), T has a $35 net unrealized built-in loss on becoming a member of the P group (($55)+$20=($35)). Assume that this amount exceeds the threshold requirement in section 382(h)(3)(B). Under section 382(h)(2)(B), the entire amount of T's $55 unrealized loss is treated as a built-in loss to the extent it is recognized during the 5-year recognition period described in section 382(h)(7). Under paragraph (b)(2)(iii) of this section, the restriction under section 382(h)(1)(B)(ii), which limits the amount of recognized built-in loss that is treated as pre-change loss to the amount of the net unrealized built-in loss, is inapplicable for this purpose. Consequently, the entire $55 of unrealized loss (not just the $35 net unrealized loss) is treated under paragraph (b)(1) of this section as a built-in loss to the extent it is recognized within 5 years of T's becoming a member of the P group. Under paragraph (a) of this section, a built-in loss is subject to the SRLY limitation under § 1.1502–21(c)(1).

(iv) Under paragraph (b)(2)(ii) of this section, the built-in loss would similarly be subject to a SRLY limitation under § 1.1502–21(c)(1) if T transferred all of its assets and liabilities to a subsidiary of the P group in a single transaction described in section 351. To the extent the built-in loss is recognized within 5 years of T's transfer, all of the items contributed by the acquiring subsidiary to consolidated taxable income (and not just the items attributable to the assets and liabilities transferred by T) are included for purposes of determining the SRLY limitation under § 1.1502–21(c)(1).

Example 2. Actual application of section 382 not relevant. (i) Individual A owns all of the stock of P, and Individual B owns all of the stock of T. T has two depreciable assets. Asset 1 has an unrealized loss of $25 (basis $75, value $50), and asset 2 has an unrealized gain of $20 (basis $30, value $50). P buys 55 percent of the stock of T in January of Year 1, resulting in an ownership change of T under section 382(g). During March of Year 2, P buys the 45 percent balance of the T stock, and T becomes a member of the P group.

(ii) Although T has an ownership change for purposes of section 382 in Year 1 and not Year 2, T's joining the P group in Year 2 is treated as an ownership change under section 382(g) solely for purposes of this section. Consequently, for purposes of this section, whether T has a net unrealized built-in loss under section 382(h)(3) is determined as if the day T joined the P group were a change date.

Example 3. Determination of a recognized built-in loss of a subgroup. (i) Individual A owns all of the stock of P, S, and M. P and M are each the common parent of a consolidated group. During Year 1, P acquires all of the stock of S from Individual A, and S becomes a member of the P group. P's acquisition of S is not an ownership change as defined by section 382(g). At the beginning of Year 7, M acquires all of the stock of P from Individual A, and P and S become members of the M group. M's acquisitions of P and S are also not ownership changes as defined by section 382(g). At the time of M's acquisition of the P stock, P has (disregarding the stock of S) a $10 net unrealized built-in gain (two depreciable assets, asset 1 with a basis of $35 and a value of $55, and asset 2 with a basis of $55 and a value of $45), and S has a $75 net unrealized built-in loss (two depreciable assets, asset 3 with a basis of $95 and a value of $10, and asset 4 with a basis of $10 and a value of $20).

(ii) Under paragraph (c) of this section, P and S compose a subgroup on becoming members of the M group because P and S were continuously affiliated for the 60 month period ending immediately before they became members of the M group. Consequently, paragraph (b) of this section does not apply to P and S separately. Instead, their separately computed unrealized gains and losses are aggregated for purposes of determining whether, and the extent to which, any unrealized loss is treated as built-in loss under this section and is subject to the SRLY limitation under § 1.1502–21(c).

(iii) Under paragraph (c) of this section, the P subgroup has a net unrealized built-in

loss on the day P and S become members of the M group, determined by treating the day they become members as a change date. The net unrealized built-in loss is the aggregate of P's net unrealized built-in gain of $10 and S's net unrealized built-in loss of $75, or an aggregate net unrealized built-in loss of $65. (The stock of S owned by P is disregarded for purposes of determining the net unrealized built-in loss. However, any loss allowed on the sale of the stock within the recognition period is taken into account in determining recognized loss.) Assume that the $65 net unrealized built-in loss exceeds the threshold requirement under section 382(h)(3)(B).

(iv) Under paragraphs (b)(1), (b)(2)(iii), and (c) of this section, a loss recognized during the 5-year recognition period on an asset of P or S held on the day that P and S became members of the M group is a built-in loss except to the extent the group establishes that such loss exceeds the amount by which the adjusted basis of such asset on the day the member became a member exceeded the fair market value of such asset on that same day. If P sells asset 2 for $45 in Year 7 and recognizes a $10 loss, the entire $10 loss is treated as a built-in loss under paragraphs (b)(2)(iii) and (c) of this section. If S sells asset 3 for $10 in Year 7 and recognizes an $85 loss, the entire $85 loss is treated as a built-in loss under paragraphs (b)(2)(iii) and (c) of this section (not just the $55 balance of the P subgroup's $65 net unrealized built-in loss).

(v) The determination of whether P and S constitute a SRLY subgroup for purposes of loss carryovers and carrybacks, and the extent to which built-in losses are not allowed under the SRLY limitation, is made under § 1.1502–21(c).

Example 4. Computation of SRLY limitation. (i) Individual A owns all of the stock of P, the common parent of a consolidated group. During Year 1, Individual A forms T by contributing $300, and T sustains a $100 net operating loss. During Year 2, T's assets decline in value to $100. At the beginning of Year 3, P acquires all the stock of T from Individual A, and T becomes a member of the P group with a net unrealized built-in loss of $100. P's acquisition of T is not an ownership change as defined by section 382(g). Assume that $100 exceeds the threshold requirements of section 382(h)(3)(B). During Year 3, T recognizes its unrealized built-in loss as a $100 ordinary loss. The members of the P group contribute the following net income to the consolidated taxable income of the P group (disregarding T's recognized built-in loss and any consolidated net operating loss deduction under § 1.1502–21) for Years 3 and 4:

	Year 3	Year 4	Total
P group (without T)	$100	$100	$200
T	60	40	100
CTI	160	140	300

(ii) Under paragraph (b) of this section, T's $100 ordinary loss in Year 3 (not taken into account in the consolidated taxable income computations above) is a built-in loss. Under paragraph (a) of this section, the built-in loss is treated as a net operating loss carryover for purposes of determining the SRLY limitation under § 1.1502–21(c).

(iii) For Year 3, § 1.1502–21(c) limits T's $100 built-in loss and $100 net operating loss carryover from Year 1 to the aggregate of the P group's consolidated taxable income through Year 3, determined by reference to only T's items. For this purpose, consolidated taxable income is determined without regard to any consolidated net operating loss deductions under § 1.1502–21(a).

(iv) The P group's consolidated taxable income through Year 3 is $60 when determined by reference to only T's items. Under § 1.1502–21(c), the SRLY limitation for Year 3 is therefore $60.

(v) Under paragraph (a) of this section, the $100 built-in loss is treated as a current deduction for all purposes other than determination of the SRLY limitation under § 1.1502–21(c). Consequently, a deduction for the built-in loss is allowed in Year 3 before T's loss carryover from Year 1 is allowed, but only to the extent of the $60 SRLY limitation. None of T's Year 1 loss carryover is allowed because the built-in loss ($100) exceeds the SRLY limitation for Year 3.

(vi) The $40 balance of the built-in loss that is not allowed in Year 3 because of the SRLY limitation is treated as a $40 net operating loss arising in Year 3 that is carried to other years in accordance with the rules of § 1.1502–21(b). The $40 net operating loss is treated under paragraph (a) of this section and § 1.1502–21(c)(1)(ii) as a loss carryover or carryback from Year 3 that arises in a SRLY, and is subject to the rules of § 1.1502–21 (including § 1.1502–21(c)) rather than this section. See also § 1.1502–21(c)(1)(iii) *Example 4.*

(vii) The facts are the same as in paragraphs (i) through (vi) of this *Example 4,* except that T has an additional built-in loss when it joins the P group which is recognized in Year 4. For purposes of determining the SRLY limitation for this additional loss in Year 4 (or any subsequent year), the $60 of built-in loss allowed as a deduction in Year 3 is treated under paragraph (a) of this section as a deduction in Year 3 that reduces the P group's consolidated taxable income when determined by reference to only T's items.

Example 5. Built-in loss exceeding consolidated taxable income in the year recognized. (i) Individual A owns all of the stock of P and T. During Year 1, P acquires all the stock of T from Individual A, and T becomes a member of the P group. P's acquisition of T was not an ownership change as defined by section 382(g). At the time of acquisition, T has

a noncapital asset with an unrealized loss of $45 (basis $100, value $55), which exceeds the threshold requirements of section 382(h)(3)(B). During Year 2, T sells its asset for $55 and recognizes the unrealized built-in loss. The P group has $10 of consolidated taxable income in Year 2, computed by disregarding T's recognition of the $45 built-in loss and the consolidated net operating loss deduction, while the consolidated taxable income would be $25 if determined by reference to only T's items (other than the $45 loss).

(ii) T's $45 loss is recognized in Year 2 and, under paragraph (b) of this section, constitutes a built-in loss. Under paragraph (a) of this section and §1.1502–21(c)(1)(ii), the loss is treated as a net operating loss carryover to Year 2 for purposes of applying the SRLY limitation under §1.1502–21(c).

(iii) For Year 2, T's SRLY limitation is the aggregate of the P group's consolidated taxable income through Year 2 determined by reference to only T's items. For this purpose, consolidated taxable income is determined by disregarding any built-in loss that is treated as a net operating loss carryover, and any consolidated net operating loss deductions under §1.1502–21(a). Consolidated taxable income so determined is $25.

(iv) Under §1.1502–21(c), $25 of the $45 built-in loss could be deducted in Year 2. Because the P group has only $10 of consolidated taxable income (determined without regard to the $45), the $25 loss creates a consolidated net operating loss of $15. This loss is carried back or forward under the rules of §1.1502–21(b) and absorbed under the rules of §1.1502–21(a). This loss is not treated as arising in a SRLY (see §1.1502–21(c)(1)(ii)) and therefore is not subject to the SRLY limitation under §1.1502–21(c) in any consolidated return year of the group to which it is carried. The remaining $20 is treated as a loss carryover arising in a SRLY and is subject to the limitation of §1.1502–21(c) in the year to which it is carried.

(e) *Predecessors and successors.* For purposes of this section, any reference to a corporation or member includes, as the context may require, a reference to a successor or predecessor, as defined in §1.1502–1(f)(4).

(f) *Built-in losses recognized by common parent of group*—(1) *General rule.* Paragraph (a) of this section does not apply to any loss recognized by the group on an asset held by the common parent on the date the group is formed. Following an acquisition described in §1.1502–75(d)(2) or (3), references to the common parent are to the corporation that was the common parent immediately before the acquisition.

(2) *Anti-avoidance rule.* If a corporation that becomes a common parent of a group acquires assets with a net unrealized built-in loss in excess of the threshold requirement of section 382(h)(3)(B) (and thereby increases its net unrealized built-in loss or decreases its net unrealized built-in gain) prior to, and in anticipation of, the formation of the group, paragraph (f)(1) of this section does not apply.

(g) *Overlap with section 382*—(1) *General rule.* The limitations provided in §§1.1502–21(c) and 1.1502–22(c) do not apply to recognized built-in losses or to loss carryovers or carrybacks attributable to recognized built-in losses when the application of paragraph (a) of this section results in an overlap with the application of section 382.

(2) *Definitions*—(i) *Generally.* For purposes of this paragraph (g), the definitions and nomenclature contained in section 382, the regulations thereunder, and §§1.1502–90 through 1.1502–99 apply.

(ii) *Overlap*—(A) An overlap of the application of paragraph (a) of this section and the application of section 382 with respect to built-in losses occurs if a corporation becomes a member of a consolidated group (the SRLY event) within six months of the change date of an ownership change giving rise to a section 382(a) limitation that would apply with respect to the corporation's recognized built-in losses (the section 382 event). Except as provided in paragraph (g)(3) of this section, application of the overlap rule does not require that the size and composition of the corporation's net unrealized built-in loss is the same on the date of the section 382 event and the SRLY event.

(B) For special rules in the event that there is a SRLY subgroup and/or a loss subgroup as defined in §1.1502–91(d)(2) with respect to built-in losses, see paragraph (g)(4) of this section.

(3) *Operating rules*—(i) *Section 382 event before SRLY event.* If a SRLY event occurs on the same date as a section 382 event or within the six month period beginning on the date of the section 382 event, paragraph (g)(1) of this section applies beginning with the tax year that includes the SRLY event. Paragraph (g)(1) of this section does not apply, however, if a corporation that would otherwise be subject to the

overlap rule acquires assets from a person other than a member of the group with a net unrealized built-in loss in excess of the threshold requirement of section 382(h)(3)(B) (and thereby increases its net unrealized built-in loss) after the section 382 event, and before the SRLY event.

(ii) *SRLY event before section 382 event.* If a section 382 event occurs within the period beginning the day after the SRLY event and ending six months after the SRLY event, paragraph (g)(1) of this section applies starting with the first tax year that begins after the section 382 event. However, paragraph (g)(1) of this section does not apply at any time if a corporation that otherwise would be subject to paragraph (g)(1) of this section transfers assets with an unrealized built-in loss to another member of the group after the SRLY event, but before the section 382 event, unless the corporation recognizes the built-in loss upon the transfer.

(4) *Subgroup rules.* In general, in the case of built-in losses for which there is a SRLY subgroup and the corporations joining the group at the time of the SRLY event also constitute a loss subgroup (as defined in §1.1502–91(d)(2)), the principles of this paragraph (g) apply to the SRLY subgroup, and not separately to its members. However, paragraph (g)(1) of this section applies with respect to built-in losses only if—

(i) All members of the SRLY subgroup with respect to those built-in losses are also included in a loss subgroup (as defined in §1.1502–91(d)(2)); and

(ii) All members of a loss subgroup (as defined in §1.1502–91(d)(2)) are also members of a SRLY subgroup with respect to those built-in losses.

(5) *Asset acquisitions.* Notwithstanding the application of this paragraph (g), paragraph (a) of this section applies to asset acquisitions by the corporation that occurs after the latter of the SRLY event and the section 382 event. See, paragraph (b)(2)(ii) of this section.

(6) *Examples.* The principles of this paragraph (g) are illustrated by the following examples:

Example 1. Determination of subgroup. (i) Individual A owns all of the stock of P, P1, and S. In Year 1, P acquires all of the stock of P1, and they file a consolidated return. In Year 3, P acquires all of the stock of S, and S joins the P group. Individual B, unrelated to Individual A, owns all of the stock of M and K, each the common parent of a consolidated group. Individual C, unrelated to either Individual A or Individual B, owns all of the stock of T.

(ii) At the beginning of Year 7, M acquires all of the stock of P from Individual A, and, as a result, P, P1, and S become members of the M group. At the time of M's acquisition of the P stock, P has a $15 net unrealized built-in loss (disregarding the stock of P1), P1 has a net unrealized built-in gain of $10, and S has a net unrealized built-in gain of $5.

(iii) During Year 8, M acquires all of the stock of T, and T joins the M group. At the time of M's acquisition of the T stock, T had an unrealized built-in loss of $15. At the beginning of Year 9, K acquires all of the stock of M from Individual B, and the members of the M consolidated group including P, P1, S, and T become members of the K group. At the time of K's acquisition of the M stock, M has (disregarding the stock of P and T) a $15 net unrealized built-in loss, P has a $20 net unrealized built-in loss (disregarding the stock of P1), P1 has a net unrealized built-in gain of $5, S has a net unrealized built-in loss of $35, and T has a $15 net unrealized built-in loss.

(iv) M's acquisition of P in Year 7 results in P, P1, and S becoming members of the M group (the SRLY event). Under paragraph (c) of this section, P and P1 compose a SRLY built-in loss subgroup because they have been affiliated for the 60 consecutive month period immediately preceding joining the M group. S is not a member of the subgroup because on becoming a member of the M group it had not been continuously affiliated with P and P1 for the 60 month period ending immediately before it became a member of the M group. Consequently, §1.1502–15 applies to S separately from the P and P1 subgroup.

(v) Assuming that the $5 net unrealized built-in loss of the P/P1 subgroup exceeds the threshold requirement under section 382(h)(3)(B), M's acquisition of P resulted in an ownership change of P and P1 within the meaning of section 382(g) that subjects P and P1 to a limitation under section 382(a) (the section 382 event). Because, with respect to P and P1, the SRLY event and the change date of the section 382 event occur on the same date and because the loss subgroup and SRLY subgroup are coextensive, there is an overlap of the application of the SRLY rules and the application of section 382.

(vi) S was not a loss corporation because it did not have a net operating loss carryover, or a net unrealized built-in loss, and therefore, M's acquisition of P did not result in an ownership change of S within the meaning of section 382(g). S, therefore is not subject to

the overlap rule of paragraph (g) of this section.

(vii) M's acquisition of T resulted in T becoming a member of the M group (the SRLY event). Assuming that T's $15 net unrealized built-in loss exceeds the threshold requirement under section 382(h)(3)(B), M's acquisition of T also resulted in an ownership change of T within the meaning of section 382(g) that subjects T to a limitation under section 382(a) (the section 382 event). Because, with respect to T, the SRLY event and the change date of the section 382 event occur on the same date, there is an overlap of the application of the SRLY rules and the application of section 382 within the meaning of paragraph (g) of this section.

(viii) K's acquisition of M results in the members of the M consolidated group, including T, P, P1, and S, becoming members of the K group (the SRLY event). Because T, P, and P1 were each included in the determination of a net unrealized built-in loss that was subject to the overlap rule described in paragraph (g)(1) of this section when they each became members of the M group, they are deemed under paragraph (c)(3) of this section to have been continuously affiliated with M for the 60 month period ending immediately before becoming a member of the M group, notwithstanding their actual affiliation history. As a result, M, T, P, and P1 compose a SRLY built-in loss subgroup under paragraph (c)(2) of this section. K's acquisition of M is not subject to paragraph (g) of this section because it does not result in a section 382 event.

(ix) S, however, is not a member of the subgroup under paragraph (c)(2) of this section. Because S was not included in the determination of a net unrealized built-in loss that was subject to the overlap rule described in paragraph (g)(1) of this section when it joined the M group, S is treated as becoming an affiliate of M on the date it joined the M group. Furthermore, under paragraph (c)(3) of this section, S is deemed to have begun its affiliation with P and P1 on the date it joined the M group. Consequently, §1.1502–15 applies to S separately to the extent its built-in loss is recognized within the recognition period.

Example 2. Post-overlap acquisition of assets. (i) Individual A owns all of the stock of P, the common parent of a consolidated group. B, an individual unrelated to Individual A, owns all of the stock of T. T has two depreciable assets. Asset 1 has an unrealized built-in loss of $25 (basis $75, value $50), and asset 2 has an unrealized built-in gain of $20 (basis $30, value $50). During Year 3, P buys all of the stock of T from Individual B. On January 1, Year 4, P contributes $80 cash and Individual A contributes asset 3, a depreciable asset, with a net unrealized built-in loss of $45 (basis $65, value $20), in exchange for T stock in a transaction that is described in section 351.

(ii) P's acquisition of T results in T becoming a member of the P group (the SRLY event) and also results in an ownership change of T, within the meaning of section 382(g), that gives rise to a limitation under section 382(a) (the section 382 event).

(iii) Because the SRLY event and the change date of the section 382 event occur on the same date, there is an overlap of the application of the SRLY rules and the application of section 382. Consequently, under paragraph (g) of this section, the limitation under paragraph (a) of this section does not apply to T's net unrealized built-in loss when it joined the P group.

(iv) Individual A's Year 4 contribution of a depreciable asset occurred after T was a member of the P group. Assuming that the amount of the net unrealized built-in loss exceeds the threshold requirement of section 382(h)(3)(B), the sale of asset 3 within the recognition period is subject to the SRLY limitation of paragraphs (a) and (b)(2)(ii) of this section.

Example 3. Overlap rule. (i) Individual A owns all of the stock of P, the common parent of a consolidated group. B, an individual unrelated to Individual A, owns all of the stock of T. T has two depreciable assets. Asset 1 has an unrealized loss of $55 (basis $75, value $20), and asset 2 has an unrealized gain of $30 (basis $30, value $60). On February 28 of Year 2, P purchases 55% of T from Individual B. On June 30, of Year 2, P purchases an additional 35% of T from Individual B.

(ii) The February 28 purchase of 55% of T is a section 382 event because it results in an ownership change of T that gives rise to a section 382(a) limitation. The June 30 purchase of 35% of T results in T becoming a member of the P group and is therefore a SRLY event.

(iii) Because the SRLY event occurred within six months of the change date of the section 382 event, there is an overlap of the application of the SRLY rules and the application of section 382, and paragraph (a) of this section does not apply. Therefore, the SRLY limitation does not apply to any of the $55 loss in asset 1 recognized by T after T joined the P group. See §1.1502–94 for rules relating to the application of section 382 with respect to T's $25 unrealized built-in loss.

Example 4. Overlap rule-Fluctuation in value. (i) The facts are the same as in *Example 3*, except that by June 30, of Year 2, asset 1 had declined in value by a further $10. Thus asset 1 had an unrealized loss of $65 (basis $75, value $10), and asset 2 had an unrealized gain of $30 (basis $30, value $60).

(ii) Because paragraph (a) of this section does not apply, the further decrease in asset 1's value is disregarded. Consequently, the results are the same as in *Example 3*.

(h) *Effective date*—(1) *In general.* This section generally applies to built-in losses recognized in taxable years for which the due date (without extensions) of the consolidated return is after June 25, 1999. However—

(i) In the event that paragraphs (f)(1) and (g)(1) of this section do not apply to a particular built-in loss in the current group, then solely for purposes of applying paragraph (a) of this section to determine a limitation with respect to that built-in loss and with respect to which the SRLY register (consolidated taxable income determined by reference to only the member's (or subgroup's) items of income, gain, deduction, or loss) began in a taxable year for which the due date of the return was on or before June 25, 1999, paragraph (c)(3) of this section shall not apply; and

(ii) For purposes of paragraph (g) of this section, only an ownership change to which section 382(a) as amended by the Tax Reform Act of 1986 applies shall constitute a section 382 event.

(2) *Prior periods.* For certain taxable years ending on or before June 25, 1999, see §1.1502–15T in effect prior to June 25, 1999, as contained in 26 CFR part 1 revised April 1, 1999, as applicable.

[T.D. 8823, 64 FR 36101, July 2, 1999; 64 FR 41784, Aug. 2, 1999, as amended by T.D. 9048, 68 FR 12290, Mar. 14, 2003; T.D. 9187, 70 FR 10326, Mar. 3, 2005; T.D. 9254, 71 FR 13018, Mar. 14, 2006]

§1.1502–16 Mine exploration expenditures.

(a) *Section 617*—(1) *In general.* If the aggregate amount of the expenditures to which section 617(a) applies, paid or incurred with respect to mines or deposits located outside the United States (as defined in section 638 and the regulations thereunder), does not exceed:

(i) $400,000 minus

(ii) All amounts deducted or deferred during the taxable year and all preceding taxable years under section 617 or section 615 of the Internal Revenue Code of 1954 and section 23(ff) of the Internal Revenue Code of 1939 by corporations which are members of the group during the taxable year (and individuals or corporations which have transferred any mineral property to any such member within the meaning of section 617(g)(2)(B)) for taxable years ending after December 31, 1950 and prior to the taxable year, then the deduction under section 617 with respect to such foreign expenditures and paragraph (c) of §1.1502–12 for each member shall be no greater than an allocable portion of such amount hereinafter referred to as the ''consolidated foreign exploration limitation.'' Such allocable portion shall be determined under subparagraph (2) of this paragraph. If the amount of such expenditures exceeds the consolidated foreign exploration limitation, no deduction shall be allowed with respect to such excess.

(2) *Allocable portion of limitation.* A member's allocable portion of the consolidated foreign exploration limitation for a consolidated return year shall be:

(i) The amount allocated by the common parent pursuant to an allocation plan adopted by the consolidated group, but in no event shall a member be allocated more than the amount it could have deducted had it filed a separate return. Such allocation plan must include a statement which also contains the total foreign exploration expenditures of each member which could have been deducted under section 617 if the member had filed a separate return. Such plan must be attached to a consolidated return filed on or before the due date of such return (including extensions of time), and may not be changed after such date, or

(ii) If no plan is filed in accordance with subdivision (i) of this subparagraph, then the portion of the consolidated foreign exploration limitation allocable to each member incurring such expenditures is an amount equal to such limitation multiplied by a fraction, the numerator of which is the amount of foreign exploration expenditures which could have been deducted under section 617 by such member had it filed a separate return and the denominator of which is the aggregate of such amounts for all members of the group.

(b) *Section 615*—(1) *In general.* If the aggregate amount of the expenditures, to which section 615(a) applies, which are paid or incurred by the members of

the group during any consolidated return year exceeds the lesser of:

(i) $100,000, or

(ii) $400,000 minus all such expenditures deducted (or deferred) by corporations which are members of the group during the taxable year (and individuals or corporations which have transferred any mineral property to any such member within the meaning of section 615(c)(2)(B)) for taxable years ending after December 31, 1950, and prior to the taxable year, then the deduction (or amount deferrable) under section 615 and paragraph (c) of § 1.1502–12 for each member shall be no greater than an allocable portion of such lesser amount, hereinafter referred to as the ''consolidated exploration limitation''. Such allocable portion shall be determined under subparagraph (2) of this paragraph.

(2) *Allocable portion of limitation.* A member's allocable portion of the consolidated exploration limitation for a consolidated return year shall be:

(i) The amount allocated by the common parent pursuant to an allocation plan adopted by the consolidated group, but in no event shall a member be allocated more than the amount it could have deducted (or deferred) had it filed a separate return. Such allocation plan must include a statement which also contains the total exploration expenditures of each member for the taxable year, and the expenditures of each member which could have been deducted (or deferred) under section 615 if the member had filed a separate return. Such plan must be attached to a consolidated return filed on or before the due date of such return (including extensions of time), and may not be changed after such date, or

(ii) If no plan is filed in accordance with subdivision (i) of this subparagraph, then the portion of the consolidated exploration limitation allocable to each member incurring such expenditures is an amount equal to such limitation multiplied by a fraction, the numerator of which is the amount which could have been deducted (or deferred) under section 615 by such member had it filed a separate return and the denominator of which is the aggregate of such amounts for all members of the group.

(c) *Examples.* The provisions of this section may be illustrated by the following examples:

Example (1). Corporation X and its wholly owned subsidiaries, corporations Y and Z, file a consolidated return for the calendar year 1971. None of the corporations have incurred exploration expenditures described in section 617 in previous years. During 1971, X incurred foreign exploration expenditures of $30,000, Y of $20,000, and Z of $40,000. The amount of foreign exploration expenditures deductible under section 617 for purposes of computing separate taxable income under § 1.1502–12 will be the amount actually expended by each corporation.

Example (2). Assume the same facts as in example (1) except that prior to 1971, X, Y, and Z had deducted (or deferred) under section 615 and 617 a total of $300,000 of exploration expenditures. During 1971, with respect to deposits located outside the United States X incurred exploration expenditures of $25,000, Y of $75,000, and Z of $125,000. The consolidated exploration limitation under paragraph (a) of this section with respect to the foreign deposits (there is no limitation with respect to the domestic expenditures) is $100,000. X may allocate the $100,000 in any manner among the three members, except that X may not be allocated more than $25,000 nor Y more than $75,000, the amount actually expended by X and Y and which they could have deducted had they each filed a separate return. If the allocation is not made in accordance with paragraph (a)(2)(i) of this section, the $100,000 limitation will be allocated under paragraph (a)(2)(ii) of this section as follows:

Corporation	Expenditure	Fraction	Limitation	Allocable portion
X	$25,000	$\frac{25,000}{200,000}$	×$100,000=	$12,500
Y	$75,000	$\frac{75,000}{200,000}$	×$100,000=	$37,500
Z	$125,000	$\frac{100,000}{200,000}$	×$100,000=	$50,000

The denominator of $200,000 was calculated as follows:

X=$25,000
Y=$75,000
Z=$100,000 (maximum amount allowed if filed separately)
Total $200,000.

Example (3). Assume the same facts as in example (2) and that on January 1, 1971, X acquired all of the stock of corporation T which prior to its taxable year beginning January 1, 1971, had previously deducted (or deferred) $310,000 of exploration expenditures. Assume further that in 1971 X incurred $25,000 of foreign exploration expenditures, Y $50,000, T $50,000, and Z none. A consolidated return is filed for 1971. None of the expenditures may be deducted under section 617 since the consolidated exploration limitation is zero. The limitation is zero since the aggregate amount of previously deducted (or deferred) exploration expenditures by the members of the group exceeds $400,000. (The total of such expenditures is $410,000, of which $310,000 is attributable to T and, assuming the allocation of the limitation in example (2) is made under paragraph (a)(2)(ii) of this section, $12,500 is attributable to X, $37,500 to Y, and $50,000 to Z.

Example (4). Assume the same facts as in example (3) except that on December 31, 1971, X sold all of the stock in Z to an unrelated party. The consolidated exploration limitation for 1972 will be $40,000, computed by subtracting from $400,000, the aggregate amount of previously deducted (or deferred) exploration expenditures incurred by the members of the group prior to 1972. (The total of such expenditures is $360,000, of which $12,500 is attributable to X, $37,500 to Y and $310,000 to T.) Amounts previously deducted (or deferred) by Z are not taken into account since it was not a member of the group at any time during 1972. Amounts previously deducted (or deferred) by Z shall be taken into account by it for subsequent separate return years.

[T.D. 7192, 37 FR 12949, June 30, 1972]

§ 1.1502–17 Methods of accounting.

(a) *General rule.* The method of accounting to be used by each member of the group shall be determined in accordance with the provisions of section 446 as if such member filed a separate return. For treatment of depreciable property after a transfer within the group, see paragraph (g) of § 1.1502–12.

(b) *Adjustments required if method of accounting changes*—(1) *General rule.* If a member of a group changes its method of accounting for a consolidated return year, the terms and conditions prescribed by the Commissioner under section 446(e), including section 481(a) where applicable, shall apply to the member. If the requirements of section 481(b) are met because applicable adjustments under section 481(a) are substantial, the increase in tax for any prior year shall be computed upon the basis of a consolidated return or a separate return, whichever was filed for such prior year.

(2) *Changes in method of accounting for intercompany transactions.* If a member changes its method of accounting for intercompany transactions for a consolidated return year, the change in method generally will be effected on a cut-off basis.

(c) *Anti-avoidance rules*—(1) *General rule.* If one member (B) directly or indirectly acquires an activity of another member (S), or undertakes S's activity, with the principal purpose to avail the group of an accounting method that would be unavailable (or would be unavailable without securing consent from the Commissioner) if S and B were treated as divisions of a single corporation, B must use the accounting method for the acquired or undertaken activity determined under paragraph (c)(2) of this section or must secure consent from the Commissioner under applicable administrative procedures to use a different method.

(2) *Treatment as divisions of a single corporation.* B must use the method of accounting that would be required if B acquired the activity from S in a transaction to which section 381 applied. Thus, the principles of section 381 (c)(4) and (c)(5) apply to resolve any conflicts between the accounting methods of S and B, and the acquired or undertaken activity is treated as having the accounting method used by S. Appropriate adjustments are made to treat all acquisitions or undertakings that are part of the same plan or arrangement as a single acquisition or undertaking.

(d) *Examples.* The provisions of this section are illustrated by the following examples:

Example 1. Separate return treatment generally. X and its wholly-owned subsidiary Y filed separate returns for their calendar years ending December 31, 1965. During calendar year 1965, X employed an accrual method of accounting, established a reserve

for bad debts, and elected under section 171 to amortize bond premiums with respect to its fully taxable bonds. During calendar year 1965, Y employed the cash receipts and disbursements method, used the specific charge-off method with respect to its bad debts, and did not elect to amortize bond premiums under section 171 with respect to its bonds. X and Y filed a consolidated return for 1966. For 1966 X and Y must continue to compute income under their respective methods of accounting (unless a change in method under section 446 is made).

Example 2. Adopting methods. Corporation P is a member of a consolidated group. P provides consulting services to customers under various agreements. For one type of customer, P's agreements require payment only when the contract is completed (payment-on-completion contracts). P uses an overall accrual method of accounting. Accordingly, P takes its income from consulting contracts into account when earned, received, or due, whichever is earlier. With the principal purpose to avoid seeking the consent of the Commissioner to change its method of accounting for the payment-on-completion contracts to the cash method, P forms corporation S, and S begins to render services to those customers subject to the payment-on-completion contracts. P continues to render services to those customers not subject to these contracts.

(b) Under paragraph (c) of this section, S must account for the consulting income under the payment-on-completion contracts on an accrual method rather than adopting the cash method contemplated by P.

Example 3. Changing inventory sub-method. (a) Corporation P is a member of a consolidated group. P operates a manufacturing business that uses dollar-value LIFO, and has built up a substantial LIFO reserve. P has historically manufactured all its inventory and has used one natural business unit pool. P begins purchasing goods identical to its own finished goods from a foreign supplier, and is concerned that it must establish a separate resale pool under § 1.472–8(c). P anticipates that it will begin to purchase, rather than manufacture, a substantial portion of its inventory, resulting in a recapture of most of its LIFO reserve because of decrements in its manufacturing pool. With the principal purpose to avoid the decrements, P forms corporation S in Year 1. S operates as a distributor to nonmembers, and P sells all of its existing inventories to S. S adopts LIFO, and elects dollar-value LIFO with one resale pool. Thereafter, P continues to manufacture and purchase inventory, and to sell it to S for resale to nonmembers. P's intercompany gain from sales to S is taken into account under § 1.1502–13. S maintains its Year 1 base dollar value of inventory so that P will not be required to take its intercompany items (which include the effects of the LIFO reserve recapture) into account.

(b) Under paragraph (c) of this section, S must maintain two pools (manufacturing and resale) to the same extent that P would be required to maintain those pools under § 1.472–8 if it had not formed S.

(e) *Effective dates.* Paragraph (b) of this section applies to changes in method of accounting effective for years beginning on or after July 12, 1995. For changes in method of accounting effective for years beginning before that date, see § 1.1502–17 (as contained in the 26 CFR part 1 edition revised as of April 1, 1995). Paragraphs (c) and (d) apply with respect to acquisitions occurring or activities undertaken in years beginning on or after July 12, 1995.

[T.D. 6894, 31 FR 11794, Sept. 8, 1966, as amended by T.D. 8597, 60 FR 36708, July 18, 1995]

§ 1.1502–18 Inventory adjustment.

(a) *Definition of intercompany profit amount.* For purposes of this section, the term ''intercompany profit amount'' for a taxable year means an amount equal to the profits of a corporation (other than those profits which such corporation has elected not to defer pursuant to § 1.1502– 13(c)(3) or which have been taken into account pursuant to § 1.1502–13(f)(1)(viii)) arising in transactions with other members of the group with respect to goods which are, at the close of such corporation's taxable year, included in the inventories of any member of the group. See § 1.1502–13(c)(2) with respect to the determination of profits. See the last sentence of § 1.1502–13(f)(1)(i) for rules for determining which goods are considered to be disposed of outside the group and therefore not included in inventories of members.

(b) *Addition of initial inventory amount to taxable income.* If a corporation:

(1) Is a member of a group filing a consolidated return for the taxable year,

(2) Was a member of such group for its immediately preceding taxable year, and

(3) Filed a separate return for such preceding year,

then the intercompany profit amount of such corporation for such separate

return year (hereinafter referred to as the ''initial inventory amount'') shall be added to the income of such corporation for the consolidated return year (or years) in which the goods to which the initial inventory amount is attributable are disposed of outside the group or such corporation becomes a nonmember. Such amount shall be treated as gain from the sale or exchange of property which is neither a capital asset nor property described in section 1231.

(c) *Recovery of initial inventory amount*—(1) *Unrecovered inventory amount.* The term ''unrecovered inventory amount'' for any consolidated return year means the lesser of:

(i) The intercompany profit amount for such year, or

(ii) The initial inventory amount.

However, if a corporation ceases to be a member of the group during a consolidated return year, its unrecovered inventory amount for such year shall be considered to be zero.

(2) *Recovery during consolidated return years.* (i) To the extent that the unrecovered inventory amount of a corporation for a consolidated return year is less than such amount for its immediately preceding year, such decrease shall be treated for such year by such corporation as a loss from the sale or exchange of property which is neither a capital asset nor property described in section 1231.

(ii) To the extent that the unrecovered inventory amount for a consolidated return year exceeds such amount for the preceding year, such increase shall be treated as gain from the sale or exchange of property which is neither a capital asset nor property described in section 1231.

(3) *Recovery during first separate return year.* For the first separate return year of a member following a consolidated return year, the unrecovered inventory amount for such consolidated return year (minus any part of the initial inventory amount which has not been added to income pursuant to paragraph (b) of this section) shall be treated as a loss from the sale or exchange of property which is neither a capital asset nor property described in section 1231.

(4) *Acquisition of group.* For purposes of this section, a member of a group shall not become a nonmember or be considered as filing a separate return solely because of a termination of the group (hereinafter referred to as the ''terminating group'') resulting from:

(i) The acquisition by a nonmember corporation of (*a*) the assets of the common parent in a reorganization described in subparagraph (A), (C), or (D) (but only if the requirements of subparagraphs (A) and (B) of section 354(b)(1) are met) of section 368 (a)(1), or (b) stock of the common parent, or

(ii) The acquisition (in a transaction to which §1.1502–75(d)(3) applies) by a member of (*a*) the assets of a nonmember corporation in a reorganization referred to in subdivision (i) of this subparagraph, or (*b*) stock of a nonmember corporation,

if all the members of the terminating group (other than such common parent if its assets are acquired) immediately before the acquisition are members immediately after the acquisition of another group (hereinafter referred to as the ''succeeding group'') which files a consolidated return for the first taxable year ending after the date of acquisition. The members of the succeeding group shall succeed to any initial inventory amount and to any unrecovered inventory amount of members of the terminating group. This subparagraph shall not apply with respect to acquisitions occurring before August 25, 1971.

(d) *Examples.* The provisions of paragraphs (a), (b), and (c) of this section may be illustrated by the following examples:

Example (1). Corporations P, S, and T report income on the basis of a calendar year. Such corporations file separate returns for 1965. P manufactures widgets which it sells to both S and T, who act as distributors. The inventories of S and T at the close of 1965 are comprised of widgets which they purchased from P and with respect to which P derived profits of $5,000 and $8,000, respectively. P, S, and T file a consolidated return for 1966. During 1966, P sells widgets to S and T with respect to which it derives profits of $7,000 and $10,000, respectively. The inventories of S and T as of December 31, 1966, are comprised of widgets on which P derived net profits of $4,000 and $8,000, respectively. P's initial inventory amount is $13,000, P's intercompany profit amount for 1965 (such $13,000 amount is the profits of P with respect to goods sold to S and T and included in their inventories at

the close of 1965). Assuming that S and T identify their goods on a first-in, first-out basis, the entire opening inventory amount of $13,000 is added to P's income for 1966 as gain from the sale or exchange of property which is neither a capital asset nor properly described in section 1231, since the goods to which the initial inventory amount is attributable were disposed of in 1966 outside the group. However, since P's unrecovered inventory amount for 1966, $12,000 (the intercompany profit amount for the year, which is less than the initial inventory amount), is less than the unrecovered inventory amount for 1965, $13,000, this decrease of $1,000 is treated by P for 1966 as a loss from the sale or exchange of property which is neither a capital asset nor property described in section 1231.

Example (2). Assume the same facts as in example (1) and that at the close of 1967, a consolidated return year, the inventories of S and T are comprised of widgets on which P derived profits of $5,000 and $3,000, respectively. Since P's unrecovered inventory amount for 1967, $8,000, is less than $12,000, the unrecovered inventory amount for 1966, this decrease of $4,000 is treated by P for 1967 as a loss from the sale or exchange of property which is neither a capital asset nor property described in section 1231.

Example (3). Assume the same facts as in examples (1) and (2) and that in 1968, a consolidated return year, P's intercompany profit amount is $11,000. P will report $3,000 (the excess of $11,000, P's unrecovered inventory amount for 1968, over $8,000, P's unrecovered inventory amount for 1967) for 1968 as a gain from the sale or exchange of property which is neither a capital asset nor property described in section 1231.

Example (4). Assume the same facts as in examples (1), (2), and (3) and that in 1969 P, S, and T file separate returns. P will report $11,000 (its unrecovered inventory amount for 1968, $11,000, minus the portion of the initial inventory amount which has not been added to income during 1966, 1967, and 1968, zero) as a loss from the sale or exchange of property which is neither a capital asset nor property described in section 1231.

Example (5). Corporations P and S file a consolidated return for the first time for the calendar year 1966. P manufactures machines and sells them to S, which sells them to users throughout the country. At the close of 1965, S has on hand 20 machines which it purchased from P and with respect to which P derived profits of $3,500. During 1966, P sells 6 machines to S on which it derives profits of $1,300, and S sells 5 machines which it had on hand at the beginning of the year (S specifically identifies the machines which it sells) and on which P had derived profits of $900. P's initial inventory amount is $3,500, of which $900 is added to P's income in 1966 as gain from the sale or exchange of property which is neither a capital asset nor property described in section 1231, since such $900 amount is attributable to goods disposed of in 1966 outside the group, which goods were included in S's inventory at the close of 1965. If P and S continue to file consolidated returns, the remaining $2,600 of the initial inventory amount will be added to P's income as the machines on which such profits were derived are disposed of outside the group.

Example (6). Assume that in example (5) S had elected to inventory its goods under section 472 (relating to last-in, first-out inventories). None of P's initial inventory amount of $3,500 would be added to P's income in 1966, since none of the goods to which such amount is attributable would be considered to be disposed of during such year under the last-in, first-out method of identifying inventories.

(e) *Section 381 transfer.* If a member of the group is a transferor or distributor of assets to another member of the group within the meaning of section 381(a), then the acquiring corporation shall be treated as succeeding to the initial inventory amount of the transferor or distributor corporation to the extent that as of the date of distribution or transfer such amount has not yet been added to income. Such amount shall then be added to the acquiring corporation's income under the provisions of paragraph (b) of this section. For purposes of applying paragraph (c) of this section:

(1) The initial inventory amount of the transferor or distributor corporation shall be added to such amount of the acquiring corporation as of the close of the acquiring corporation's taxable year in which the date of distribution or transfer occurs, and

(2) The unrecovered inventory amount of the transferor or distributor corporation for its taxable year preceding the taxable year of the group in which the date of distribution or transfer occurs shall be added to such amount of the acquiring corporation.

(f) *Transitional rules for years before 1966*—(1) *In general.* If:

(i) A group filed a consolidated return for the taxable year immediately preceding the first taxable year to which this section applies,

(ii) Any member of such group made an opening adjustment to its inventory pursuant to paragraph (b) of § 1.1502–39A (as contained in the 26 CFR edition revised as of April 1, 1996), and

(iii) Paragraph (c) of § 1.1502–39A (as contained in the 26 CFR edition revised as of April 1, 1996), has not been applicable for any taxable year subsequent to the taxable year for which such adjustment was made,

then subparagraphs (2) and (3) of this paragraph shall apply.

(2) *Closing adjustment to inventory.* (i) For the first consolidated return year to which this section applies, the increase in inventory prescribed in paragraph (c) of § 1.1502–39A (as contained in the 26 CFR edition revised as of April 1, 1996), shall be made as if such year were a separate return year.

(ii) For the first separate return year of a member to which this section applies, the adjustment to inventory (whether an increase or a decrease) prescribed in paragraph (c) of § 1.1502–39A (as contained in the 26 CFR edition revised as of April 1, 1996), minus any adjustment already made pursuant to subdivision (i) of this subparagraph, shall be made to the inventory of such member.

(3) *Addition and recovery of initial inventory amount.* Each selling member shall treat as an initial inventory amount its share of the net amount by which the inventories of all members are increased pursuant to subparagraph (2)(i) of this paragraph for the first taxable year to which this section applies. A member's share shall be such net amount multiplied by a fraction, the numerator of which is its initial inventory amount (computed under paragraph (b) as if such taxable year were its first consolidated return year), and the denominator of which is the sum of such initial inventory amounts of all members. Such initial inventory amount shall be added to the income of such selling member and shall be recovered at the time and in the manner prescribed in paragraphs (b) and (c) of this section.

(4) *Example.* The provisions of this paragraph may be illustrated by the following example:

Example. (i) Corporations P, S, and T file consolidated returns for calendar 1966, having filed consolidated returns continuously since 1962. P is a wholesale distributor of groceries selling to chains of supermarkets, including those owned by S and T. The opening inventories of S and T for 1962 were reduced by $40,000 and $80,000, respectively, pursuant to paragraph (b) of § 1.1502–39A (as contained in the 26 CFR edition revised as of April 1, 1996). At the close of 1965, S and T have on hand in their inventories goods on which P derived profits of $80,000 and $90,000, respectively. The inventories of S and T at the close of 1966 include goods which they purchased from P during the year on which P derived profits of $85,000 and $105,000, respectively.

(ii) The opening inventories of S and T for 1966, the first year to which this section applies, are increased by $40,000 and $80,000, respectively, pursuant to the provisions of subparagraph (2)(i) of this paragraph. P will take into account (as provided in paragraphs (b) and (c) of this section) an initial inventory amount of $120,000 as of the beginning of 1966, the net amount by which the inventories of S and T were increased in such year. Since the increases in the inventories of S and T are the maximum allowable under paragraph (c) of § 1.1502–39A (as contained in the 26 CFR edition revised as of April 1, 1996) (i.e., the amount by which such inventories were originally decreased), no further adjustments will be made pursuant to subparagraph (2)(ii) of this paragraph to such inventories in the event that separate returns are subsequently filed.

(5) *Election not to eliminate.* If a group filed a consolidated return for the taxable year immediately preceding the first taxable year to which this section applies, and for such preceding year the members of the group did not eliminate gain or loss on intercompany inventory transactions pursuant to the adoption under § 1.1502–31A(b)(1) (as contained in the 26 CFR edition revised as of April 1, 1996) of a consistent accounting practice taking into account such gain or loss, then for purposes of this section each member shall be treated as if it had filed a separate return for such immediately preceding year.

(g) *Transitional rules for years beginning on or after July 12, 1995.* Paragraphs (a) through (f) of this section do not apply for taxable years beginning on or after July 12, 1995. Any remaining unrecovered inventory amount of a member under paragraph (c) of this section is recovered in the first taxable year beginning on or after July 12, 1995, under the principles of paragraph (c)(3) of this section by treating the first taxable year as the first separate return year of the member. The unrecovered inventory amount can be recovered

only to the extent it was previously included in taxable income. The principles of this section apply, with appropriate adjustments, to comparable amounts under paragraph (f) of this section.

[T.D. 6894, 31 FR 11794, Sept. 8, 1966, as amended by T.D. 7246, 38 FR 762, Jan. 4, 1973; T.D. 8597, 60 FR 36709, July 18, 1995: T.D. 8677, 61 FR 33323, June 27, 1996]

§ 1.1502–19 Excess loss accounts.

(a) *In general*—(1) *Purpose.* This section provides rules for a member (P) to include in income its excess loss account in the stock of another member (S). The purpose of the excess loss account is to recapture in consolidated taxable income P's negative adjustments with respect to S's stock (e.g., under § 1.1502–32 from S's deductions, losses, and distributions), to the extent the negative adjustments exceed P's basis in the stock.

(2) *Excess loss accounts*—(i) *In general.* P's basis in S's stock is adjusted under the consolidated return regulations and other rules of law. Negative adjustments may exceed P's basis in S's stock. The resulting negative amount is P's excess loss account in S's stock. For example:

(A) Once P's negative adjustments under § 1.1502–32 exceed its basis in S's stock, the excess is P's excess loss account in the S stock. If P has further adjustments, they first increase or decrease the excess loss account.

(B) If P forms S by transferring property subject to liabilities in excess of basis, § 1.1502–80(d) provides for the nonapplicability of section 357(c) and the resulting negative basis under section 358 is P's excess loss account in the S stock.

(ii) *Treatment as negative basis.* P's excess loss account is treated for all Federal income tax purposes as basis that is a negative amount, and a reference to P's basis in S's stock includes a reference to P's excess loss account.

(3) *Application of other rules of law.* The rules of this section are in addition to other rules of law. See, e.g., §§ 1.1502–32 (investment adjustment rules establishing and adjusting excess loss accounts) and 1.1502–80(d) (nonapplicability of section 357(c)). The provisions of this section and other rules of law must not be applied to recapture the same amount more than once. For purposes of this section, the definitions in § 1.1502–32 apply.

(b) *Excess loss account taken into account as income or gain*—(1) *Operating rules*—(i) *General rule.* Except as provided in paragraph (b)(1)(ii) of this section, if P is treated under this section as disposing of a share of S's stock, P takes into account its excess loss account in the share as income or gain from the disposition.

(ii) *Special limitation on amount taken into account.* Notwithstanding paragraph (b)(1)(i) of this section, if P is treated as disposing of a share of S's stock as a result of the application of paragraph (c)(1)(iii)(B) of this section, the aggregate amount of its excess loss account in the shares of S's stock that P takes into account as income or gain from the disposition shall not exceed the amount of S's indebtedness that is discharged that is neither included in gross income nor treated as tax-exempt income under § 1.1502–32(b)(3)(ii)(C)(*1*). If more than one share of S's stock has an excess loss account, such excess loss accounts shall be taken into account pursuant to the preceding sentence, to the extent possible, in a manner that equalizes the excess loss accounts in S's shares that have an excess loss account.

(iii) *Treatment of disposition.* Except as provided in paragraph (b)(4) of this section, the disposition is treated as a sale or exchange for purposes of determining the character of the income or gain.

(2) *Nonrecognition or deferral*—(i) *In general.* P's income or gain under paragraph (b)(1) of this section is subject to any nonrecognition or deferral rules applicable to the disposition. For example, if S liquidates and the exchange of P's stock in S is subject to section 332, or P transfers all of its assets (including S's stock) to S in a reorganization to which section 361(a) applies, P's income or gain from the excess loss account is not recognized under these rules.

(ii) *Nonrecognition or deferral inapplicable.* If P's income or gain under paragraph (b)(1) of this section is from a disposition described in paragraph

(c)(1) (ii) or (iii) of this section (relating to deconsolidations and worthlessness), the income or gain is taken into account notwithstanding any nonrecognition or deferral rules (even if the disposition is also described in paragraph (c)(1)(i) of this section). For example, if P transfers S's stock to a nonmember in a transaction to which section 351 applies, P's income or gain from the excess loss account is taken into account.

(3) *Tiering up in chains.* If the stock of more than one subsidiary is disposed of in the same transaction, the income or gain under this section is taken into account in the order of the tiers, from the lowest to the highest.

(4) *Insolvency*—(i) *In general.* Gain under this section is treated as ordinary income to the extent of the amount by which S is insolvent (within the meaning of section 108(d)(3)) immediately before the disposition. For this purpose S's liabilities include any amount to which preferred stock would be entitled if S were liquidated immediately before the disposition, and any former liabilities that were discharged to the extent the discharge was treated as tax-exempt income under §1.1502–32(b)(3)(ii)(C) (special rule for discharges).

(ii) *Reduction for amount of distributions.* The amount treated as ordinary income under this paragraph (b)(4) is reduced to the extent it exceeds the amount of P's excess loss account redetermined without taking into account S's distributions to P to which §1.1502–32(b)(2)(iv) applies.

(c) *Disposition of stock.* For purposes of this section:

(1) *In general.* P is treated as disposing of a share of S's stock:

(i) *Transfer, cancellation, etc.* At the time—

(A) P transfers or otherwise ceases to own the share for Federal income tax purposes, even if no gain or loss is taken into account; or

(B) P takes into account gain or loss (in whole or in part) with respect to the share.

(ii) *Deconsolidation.* At the time—

(A) P becomes a nonmember, or a nonmember determines its basis in the share (or any other asset) by reference to P's basis in the share, directly or indirectly, in whole or in part (e.g., under section 362); or

(B) S becomes a nonmember, or P's basis in the share is reflected, directly or indirectly, in whole or in part, in the basis of any asset other than member stock (e.g., under section 1071).

(iii) *Worthlessness.* At the time—

(A) Substantially all of S's assets are treated as disposed of, abandoned, or destroyed for Federal income tax purposes (e.g., under section 165(a) or §1.1502–80(c), or, if S's asset is stock of a lower-tier member, the stock is treated as disposed of under this paragraph (c)). An asset of S is not considered to be disposed of or abandoned to the extent the disposition is in complete liquidation of S or is in exchange for consideration (other than relief from indebtedness);

(B) An indebtedness of S is discharged, if any part of the amount discharged is not included in gross income and is not treated as tax-exempt income under §1.1502–32(b)(3)(ii)(C); or

(C) A member takes into account a deduction or loss for the uncollectibility of an indebtedness of S, and the deduction or loss is not matched in the same tax year by S's taking into account a corresponding amount of income or gain from the indebtedness in determining consolidated taxable income.

(2) *Becoming a nonmember.* A member is treated as becoming a nonmember if it has a separate return year (including another group's consolidated return year). For example, S may become a nonmember if it issues additional stock to nonmembers, but S does not become a nonmember as a result of its complete liquidation. A disposition under paragraph (c)(1)(ii) of this section must be taken into account in the consolidated return of the group. For example, if a group ceases under §1.1502–75(c) to file a consolidated return as of the close of its consolidated return year, the disposition under paragraph (c)(1)(ii) of this section is treated as occurring immediately before the close of the year. If S becomes a nonmember because P sells S's stock to a nonmember, P's sale is a disposition under both paragraphs (c)(1) (i) and (ii) of this section. If a group terminates under §1.1502–75(d) because the

common parent is the only remaining member, the common parent is not treated as having a deconsolidation event under paragraph (c)(1)(ii) of this section.

(3) *Exception for acquisition of group*—(i) *Application.* This paragraph (c)(3) applies only if a consolidated group (the terminating group) ceases to exist as a result of—

(A) The acquisition by a member of another consolidated group of either the assets of the common parent of the terminating group in a reorganization described in section 381(a)(2), or the stock of the common parent of the terminating group; or

(B) The application of the principles of § 1.1502–75(d)(2) or (d)(3).

(ii) *General rule.* Paragraph (c)(1)(ii) of this section does not apply solely by reason of the termination of a group in a transaction to which this paragraph (c)(3) applies, if there is a surviving group that is, immediately thereafter, a consolidated group. Instead, the surviving group is treated as the terminating group for purposes of applying this section to the terminating group. This treatment does not apply, however, to members of the terminating group that are not members of the surviving group immediately after the terminating group ceases to exist (e.g., under section 1504(a)(3) relating to reconsolidation, or section 1504(c) relating to includible insurance companies).

(d) [Reserved]. For further guidance, see § 1.1502–19T(d).

(e) *Anti-avoidance rule.* If any person acts with a principal purpose contrary to the purposes of this section, to avoid the effect of the rules of this section or apply the rules of this section to avoid the effect of any other provision of the consolidated return regulations, adjustments must be made as necessary to carry out the purposes of this section.

(f) *Predecessors and successors.* For purposes of this section, any reference to a corporation (or to a share of the corporation's stock) includes a reference to a successor or predecessor (or to a share of stock of a predecessor or successor), as the context may require.

(g) *Examples.* For purposes of the examples in this section, unless otherwise stated, P owns all 100 shares of the only class of S's stock and S owns all 100 shares of the only class of T's stock, the stock is owned for the entire year, T owns no stock of lower-tier members, the tax year of all persons is the calendar year, all persons use the accrual method of accounting, the facts set forth the only corporate activity, all transactions are between unrelated persons, and tax liabilities are disregarded. The principles of this section are illustrated by the following examples.

Example 1. Taxable disposition of stock. (a) *Facts.* P has a $150 basis in S's stock, and S has a $100 basis in T's stock. For Year 1, P has $500 of ordinary income, S has no income or loss, and T has a $200 ordinary loss. S sells T's stock to a nonmember for $60 at the close of Year 1.

(b) *Analysis.* Under paragraph (c) of this section, the sale is a disposition of T's stock at the close of Year 1 (the day of the sale). Under § 1.1502–32(b), T's loss results in S having a $100 excess loss account in T's stock immediately before the sale. Under paragraph (b)(1) of this section, S takes into account the $100 excess loss account as an additional $100 of gain from the sale. Consequently, S takes into account a $160 gain from the sale in determining the group's consolidated taxable income. Under § 1.1502–32(b), T's $200 loss and S's $160 gain result in a net $40 decrease in P's basis in S's stock as of the close of Year 1, from $150 to $110.

(c) *Intercompany sale followed by sale to nonmember.* The facts are the same as in paragraph (a) of this *Example 1,* except that S sells T's stock to P for $60 at the close of Year 1, and P sells T's stock to a nonmember at a gain at the beginning of Year 5. Under paragraph (c) of this section, S's sale is treated as a disposition of T's stock at the close of Year 1 (the day of the sale). Under § 1.1502–13 and paragraph (b)(2) of this section, S's $160 gain from the sale is deferred and taken into account in Year 5 as a result of P's sale of the T stock. Under § 1.1502–32(b), the absorption of T's $200 loss in Year 1 results in P having a $50 excess loss account in S's stock at the close of Year 1. In Year 5, S's $160 gain taken into account eliminates P's excess loss account in S's stock and increases P's basis in the stock to $110.

(d) *Intercompany distribution followed by sale to a nonmember.* The facts are the same as in paragraph (a) of this *Example 1,* except that the value of the T stock is $60 and S declares and distributes a dividend of all of the T stock to P at the close of Year 1, and P sells the T stock to a nonmember at a gain at the beginning of Year 5. Under paragraph (c) of this section, S's distribution is treated as a disposition of T's stock at the close of Year

1 (the day of the distribution). S's $100 excess loss account in T's stock is treated as additional gain under section 311(b) from the distribution. Under section 301(d), P's basis in the T stock is $60. Under § 1.1502–13, and paragraph (b)(2) of this section, S's $160 gain from the distribution is deferred and taken into account in Year 5 as a result of P's sale of the T stock. Under § 1.1502–32(b), T's $200 loss and S's $60 distribution result in P having a $110 excess loss account in S's stock at the close of Year 1. In Year 5, S's $160 gain taken into account eliminates P's excess loss account in S's stock and increases P's basis in the stock to $50.

Example 2. [*Reserved*]. For further guidance, see § 1.1502–19T(g) *Example 2.*

Example 3. Section 355 distribution of stock with an excess loss account. (a) *Facts.* P has a $30 excess loss account in S's stock, and S has a $90 excess loss account in T's stock. S distributes the T stock to P in a transaction to which section 355 applies, and neither P nor S recognizes any gain or loss. At the time of the distribution, the T stock represents 33% of the value of the S stock. Following the distribution, P's basis in the S stock is allocated under § 1.358–2 in proportion to the fair market values of the S stock and the T stock.

(b) *Analysis.* Under paragraph (c) of this section, S's distribution of the T stock is treated as a disposition. Under section 355(c) and paragraph (b)(2) of this section, S does not recognize any gain from the distribution. Under section 358, S's excess loss account in the T stock is eliminated, and P's $30 excess loss account in the S stock is treated as basis allocated between the S stock and the T stock based on their relative values. Consequently, P has a $20 excess loss account in the S stock and a $10 excess loss account in the T stock. (If P had a $30 basis rather than a $30 excess loss account in the S stock, S would not recognize gain, its excess loss account in the T stock would be eliminated, and P's basis in the stock of S and T would be $20 and $10, respectively.)

(c) *Section 355 distribution to nonmember.* The facts are the same as in paragraph (a) of this *Example 3,* except that P also distributes the T stock to its shareholders in a transaction to which section 355 applies. Under paragraph (c) of this section, P's distribution is treated as a disposition of T's stock. Under paragraph (b)(2) of this section, because P's disposition is described in paragraph (c)(1)(ii) of this section, P's $10 excess loss account in the T stock must be taken into account at the time of the distribution, notwithstanding the nonrecognition rules of section 355(c).

Example 4. Deconsolidation of a member. (a) *Facts.* P has a $50 excess loss account in S's stock, and S has a $100 excess loss account in T's stock. T issues additional stock to a nonmember and, as a consequence, T becomes a nonmember.

(b) *Analysis.* Under paragraph (c)(2) of this section, S is treated as disposing of each of its shares of T's stock immediately before T becomes a nonmember. Under paragraph (b)(1) of this section, S takes into account its $100 excess loss account as gain from the sale or exchange of T's stock. Under § 1.1502–32(b) of this section, S's $100 gain eliminates P's excess loss account in S's stock and increases P's basis in S's stock to $50.

(c) *Deconsolidation of a higher-tier member.* The facts are the same as in paragraph (a) of this *Example 4,* except that S (rather than T) issues the stock and, as a consequence, both S and T become nonmembers. Under paragraph (c)(2) of this section, P is treated as disposing of S's stock and S is treated as disposing of T's stock immediately before S and T become nonmembers. Under § 1.1502–32(b) and paragraph (b)(3) of this section, because S and T become nonmembers in the same transaction and T is the lower-tier member, S is first treated under paragraph (b)(1) of this section as taking into account its $100 excess loss account as gain from the sale or exchange of T's stock. Under § 1.1502–32(b), S's $100 gain eliminates P's excess loss account in S's stock and increases P's basis in S's stock to $50 immediately before S becomes a nonmember. Thus, only S's $100 gain is taken into account in the determination of the group's consolidated taxable income.

(d) *Intercompany gain and deconsolidation.* The facts are the same as in paragraph (c) of this *Example 4,* except that T has $30 of gain that is deferred under § 1.1502–13 and taken into account in determining consolidated taxable income immediately before T becomes a nonmember. Under § 1.1502–32(b), T's $30 gain decreases S's excess loss account in T's stock from $100 to $70 immediately before S is treated as disposing of T's stock. Under paragraph (b)(1) of this section, S is treated as taking into account its $70 excess loss account as gain from the disposition of T's stock. Under § 1.1502–32(b), S's $70 gain from the excess loss account and T's $30 deferred gain that is taken into account eliminate P's $50 excess loss account in S's stock and increase P's basis in S's stock to $50 immediately before S becomes a nonmember.

Example 5. Worthlessness. (a) *Facts.* P forms S with a $150 contribution, and S borrows $150. For Year 1, S has a $50 ordinary loss that is carried over as part of the group's consolidated net operating loss. For Year 2, P has $160 of ordinary income, and S has a $160 ordinary loss. Under § 1.1502–32(b), S's loss results in P having a $10 excess loss account in S's stock. During Year 3, the value of S's assets (without taking S's liabilities into account) continues to decline and S's stock becomes worthless within the meaning

of section 165(g) (without taking into account § 1.1502–80(c)). For Year 4, S has $10 of ordinary income.

(b) *Analysis.* Under paragraph (c)(1)(iii)(A) of this section, P is not treated as disposing of S's stock in Year 3 solely because S's stock becomes worthless within the meaning of section 165(g) (taking S's liabilities into account). In addition, because S's stock is not treated as worthless, section 382(g)(4)(D) does not prevent the Year 1 consolidated net operating loss carryover from offsetting S's $10 of income in Year 4.

(c) *Discharge of indebtedness.* The facts are the same as in paragraph (a) of this *Example 5,* except that, instead of S's stock becoming worthless within the meaning of section 165(g), S's creditor discharges $40 of S's indebtedness during Year 3, S is insolvent by more than $40 before the discharge, the discharge is excluded from the P group's gross income under section 108(a), and $40 of the $50 consolidated net operating loss carryover attributable to S is eliminated under section 108(b). Under § 1.1502- 32(b)(3)(ii)(C), S's $40 of discharge income is treated as tax-exempt income because there is a corresponding decrease under § 1.1502–32(b)(3)(iii) for elimination of the loss carryover. Under paragraph (c)(1)(iii)(B) of this section, P is treated as disposing of S's stock if the amount discharged is not included in gross income and is not treated as tax-exempt income under § 1.1502–32(b)(3)(ii)(C). Because the discharge is treated as tax-exempt income, P is not treated as disposing of S's stock by reason of the discharge.

Example 6. Avoiding worthlessness. (a) *Facts.* P forms S with a $100 contribution and S borrows $150. For Years 1 through 5, S has a $210 ordinary loss that is absorbed by the group. Under § 1.1502–32(b), S's loss results in P having a $110 excess loss account in S's stock. S defaults on the indebtedness, but the creditor does not discharge the debt (or initiate collection procedures). At the beginning of Year 6, S ceases any substantial operations with respect to the assets, but maintains their ownership with a principal purpose to avoid P's taking into account its excess loss account in S's stock.

(b) *Analysis.* Under paragraph (c)(1)(iii)(A) of this section, P's excess loss account on each of its shares of S's stock ordinarily is taken into account at the time substantially all of S's assets are treated as disposed of, abandoned, or destroyed for Federal income tax purposes. Under paragraph (e) of this section, however, S's assets are not taken into account at the beginning of Year 6 for purposes of applying paragraph (c)(1)(iii)(A) of this section. Consequently, S is treated as worthless at the beginning of Year 6, and P's $110 excess loss account is taken into account.

(h) *Effective dates*—(1) *Application.* This section applies with respect to determinations of the basis of (including an excess loss account in) the stock of a member in consolidated return years beginning on or after January 1, 1995. If this section applies, basis (and excess loss accounts) must be determined or redetermined as if this section were in effect for all years (including, for example, the consolidated return years of another consolidated group to the extent adjustments during those consolidated return years are still reflected). Any such determination or redetermination does not, however, affect any prior period.

(2) *Dispositions of stock*—(i) *Dispositions of stock before effective date.* If P was treated as disposing of stock of S in a tax year beginning before January 1, 1995 (including, for example, a deemed disposition because S was worthless) under the rules of this section then in effect, the amount of P's income, gain, deduction, or loss, and the stock basis reflected in that amount, are not redetermined under paragraph (h)(1) of this section. See paragraph (h)(3) of this section for the applicable rules.

(ii) *Application of special limitation.* If P was treated as disposing of stock of S because S was treated as worthless as a result of the application of paragraph (c)(1)(iii)(B) of this section after August 29, 2003, the amount of P's income, gain, deduction, or loss, and the stock basis reflected in that amount, are determined or redetermined with regard to paragraph (b)(1)(ii) of this section. If P was treated as disposing of stock of S because S was treated as worthless as a result of the application of paragraph (c)(1)(iii)(B) of this section on or before August 29, 2003, the group may determine or redetermine the amount of P's income, gain, deduction, or loss, and the stock basis reflected in that amount with regard to paragraph (b)(1)(ii) of this section.

(iii) *Intercompany amounts.* For purposes of this paragraph (h)(2), a disposition does not include a transaction to which § 1.1502–13, § 1.1502–13T, § 1.1502–14, or § 1.1502–14T applies. Instead, the transaction is deemed to occur as the income, gain, deduction, or loss (if any) is taken into account.

(iv) [Reserved]. For further guidance, see §1.1502–19T(h)(2)(iv).

(3) *Prior law.* For prior determinations, see prior regulations under section 1502 as in effect with respect to the determination. See, e.g., § 1.1502–19 as contained in the 26 CFR part 1 edition revised as of April 1, 1994. For guidance regarding determinations of the basis of the stock of a subsidiary acquired in an intercompany reorganization before January 23, 2006, see paragraph (d) and (g) *Example 2* of §1.1502–19 as contained in the 26 CFR part 1 edition revised as of April 1, 2005.

[T.D. 8560, 59 FR 41677, Aug. 15, 1994, as amended by T.D. 8597, 62 FR 12097, Mar. 14, 1997; T.D. 9089, 68 FR 52490, Sept. 4, 2003; T.D. 9192, 70 FR 14403, Mar. 22, 2005; T.D. 9242, 71 FR 4274, Jan. 26, 2006]

§ 1.1502–19T Excess Loss Accounts (temporary).

(b)(2) through (c) [Reserved]. For further guidance, see § 1.1502–19(b)(2) through (c).

(d) *Special allocation of basis in connection with an adjustment or determination*—(1) *Excess loss account in original shares.* If a member has an excess loss account in shares of a class of S's stock at the time of a basis adjustment or determination under the Internal Revenue Code with respect to shares of the same class of S's stock owned by the member, the adjustment or determination is allocated first to equalize and eliminate that member's excess loss account. See §1.1502–32(c) for similar allocations of investment adjustments to prevent or eliminate excess loss accounts.

(2) *Excess loss account in new S shares.* If a member would otherwise determine shares of a class of S's stock (new shares) to have an excess loss account and such member owns one or more other shares of the same class of S's stock, the basis of such other shares is allocated to eliminate and equalize any excess loss account that would otherwise be in the new shares.

(e) through (g) *Example 1* [Reserved] For further guidance, see § 1.1502–19(e) through (g) *Example 1.*

Example 2. Basis determinations under the Internal Revenue Code in intercompany reorganizations-transfer of shares without an excess loss account. (i) *Facts.* P owns all of the stock of S and T. P has 150 shares of S stock that it acquired on Date 1. Each S share has a $1 basis and a fair market value of $1. P has 100 shares of T stock that it acquired on Date 2. Each T share has a $1.20 excess loss account and a fair market value of $1. P transfers S's stock to T without receiving additional T stock. The transfer is an exchange described in both sections 351 and 354.

(ii) *Analysis.* Under sections 351 and 354, P does not recognize gain in connection with the transfer. Under §1.358–2(a)(2)(iii), P is deemed to receive 150 shares of T stock. Without regard to the application of paragraph (d) of this section, under section 358 and §1.358–2(a)(2)(i), P would have a $1 basis in each such share. However, because the basis of the additional shares of T stock would be determined when P has an excess loss account in its original shares of T stock, under paragraph (d)(1) of this section, the basis that P would otherwise have in such additional shares would eliminate the excess loss account in P's original shares of T stock such that each original share of T stock would have a basis of $0 and each share of T stock deemed received would have a basis of $0.20. Then, under §1.358–2(a)(2)(iii), the T stock is deemed to be recapitalized in a reorganization under section 368(a)(1)(E) in which P receives 100 shares of T stock (those shares P actually owns immediately after the transfer) in exchange for those 100 shares of T stock that P held immediately prior to the transfer and those 150 shares of T stock P is deemed to receive in the transfer. Under § 1.358–2(a)(2)(i), immediately after the transfer, P holds 100 shares of T stock, 60 of which each have a basis of $0.50 and 40 of which each have a basis of $0. In addition, T takes a $1 basis in each share of S stock under section 362. (If P had actually received an additional 150 shares of T stock, paragraph (d)(1) of this section would apply to shift basis from such additional T shares to P's original T shares because the basis of the additional T stock would be determined when P has an excess loss account in its original T shares. P would have a basis of $0 in each of the original T shares and a $0.20 basis in each of the additional T shares.)

(iii) *Transfer of shares with an excess loss account.* The facts are the same as in paragraph (i) of this *Example 2,* except that P transfers T's stock to S without receiving additional S stock. The transfer is an exchange described in both sections 351 and 354. Under paragraph (c) of this section, P's transfer is treated as a disposition of T's stock. Under sections 351 and 354 and paragraph (b)(2) of this section, P does not recognize gain from the disposition. Under section 358 and § 1.358–2(a)(2)(iii), P is deemed to have received 100 shares of S stock. Without regard to the application of paragraph (d) of this section, P would have a $1.20 excess loss account in each such share. However, because P would have an excess

loss account in such shares and P owns other shares of S stock of the same class, under paragraph (d)(2) of this section, the excess loss account that P would otherwise have in such shares would decrease P's basis in its original shares of S's stock such that each such original share would have a basis of $0.20 and each share deemed received would have a basis of $0. Then, under §1.358–2(a)(2)(iii), the S stock is deemed to be recapitalized in a reorganization under section 368(a)(1)(E) in which P receives 150 shares of S stock (those shares P actually owns immediately after the transfer) in exchange for those 150 shares of S stock that P held immediately prior to the transfer and those 100 shares of S stock that P is deemed to receive in connection with the transfer. Under §1.358–2(a)(2)(i), immediately after the transfer, P holds 150 shares of S stock, 90 of which each have a basis of $0.33 and 60 of which each have a basis of $0. In addition, S takes an excess loss account of $1.20 in each share of T stock under section 362. (If P had actually received 100 additional shares of S stock, paragraph (d)(2) of this section would apply to shift basis from P's original S stock because P would have otherwise had an excess loss account in such additional shares and P owns other shares of S stock of the same class. The excess loss account that P would have otherwise had in such additional shares would have decreased P's basis in its original shares of S's stock. P would have had a basis of $0.20 in each of the original shares and a basis of $0 in each of the additional shares.)

(iv) *Intercompany merger-shares with excess loss account retained.* The facts are the same as in paragraph (i) of this *Example 2*, except that S merges into T in a reorganization described in section 368(a)(1)(A) (and in section 368(a)(1)(D)), and P receives 150 additional shares of T stock in the reorganization. Under section 354 and paragraph (b)(2) of this section, P does not recognize gain. Without regard to the application of paragraph (d) of this section, under section 358 and §1.358–2(a)(2)(i), P would have a $1 basis in each such share. However, because the basis of the additional shares of T stock would be determined when P has an excess loss account in its original shares of T stock, under paragraph (d)(1) of this section, the basis that P would otherwise have in such additional shares eliminates the excess loss account in P's original shares of T stock such that each original share of T stock has a basis of $0 and each additional share of T stock has a basis of $0.20.

(v) *Intercompany merger-shares with excess loss account surrendered.* The facts are the same as in paragraph (i) of this *Example 2*, except that T merges into S in a reorganization described in section 368(a)(1)(A) (and in section 368(a)(1)(D)), and P receives 100 additional shares of S stock in the reorganization. Under section 354 and paragraph (b)(2) of this section, P does not recognize gain from the disposition. Without regard to the application of paragraph (d) of this section, under section 358 and §1.358–2(a)(2)(i), P would have a $1.20 excess loss account in each additional share of S stock received. However, because P would have an excess loss account in such shares and P owns other shares of S stock of the same class, under paragraph (d)(2) of this section, the excess loss account that P would otherwise have in such shares decreases P's basis in its original shares of S's stock such that each original share of S stock has a basis of $0.20 and each additional share of S stock has a basis of $0.

(g) *Example 3* through (h)(2)(iii) [Reserved]. For further guidance, see §1.1502–19(g) *Example 3* through (h)(2)(iii).

(h)(2)(iv) *Intercompany reorganizations.* For guidance regarding determinations of the basis of the stock of a subsidiary acquired in an intercompany reorganization on or after January 23, 2006 (see paragraphs (d) and (g) *Example 2* of this section).

(3) [Reserved]. For further guidance, see §1.1502–19(h)(3).

[T.D. 9242, 71 FR 4274, Jan. 26, 2006]

§ 1.1502–20 Disposition or deconsolidation of subsidiary stock.

(a) *Loss disallowance*—(1) *General rule.* No deduction is allowed for any loss recognized by a member with respect to the disposition of stock of a subsidiary. See also §§1.1502–11(c) (stock losses attributable to certain pre-1966 distributions) and 1.1502–80(c) (deferring the treatment of stock of members as worthless under section 165(g)).

(2) *Disposition. Disposition* means any event in which gain or loss is recognized, in whole or in part.

(3) *Coordination with loss deferral and other disallowance rules*—(i) *In general.* Loss with respect to the stock of a subsidiary may be deferred or disallowed under other applicable provisions of the Code and regulations, including section 267(f). Paragraph (a)(1) of this section does not apply to loss that is disallowed under any other provision. If loss is deferred under any other provision, paragraph (a)(1) of this section applies when the loss is taken into account. However, if an overriding event described in paragraph (a)(3)(ii) of this section occurs before the deferred loss is taken into account, paragraph (a)(1)

of this section applies to the loss immediately before the event occurs even though the loss may not be taken into account until a later time. Any loss not disallowed under paragraph (a)(1) of this section is subject to disallowance or deferral under other applicable provisions of the Code and regulations.

(ii) *Overriding events.* For purposes of paragraph (a)(3)(i) of this section, the following are overriding events:

(A) The stock ceases to be owned by a member of the consolidated group.

(B) The stock is canceled or redeemed (regardless of whether it is retired or held as treasury stock).

(C) The stock is treated as disposed of under §1.1502–19(c)(1)(ii)(B) or (c)(1)(iii).

(4) *Netting.* Paragraph (a) (1) of this section does not apply to loss with respect to the disposition of stock of a subsidiary, to the extent that, as a consequence of the same plan or arrangement, gain is taken into account by members with respect to stock of the same subsidiary having the same material terms. If the gain to which this paragraph (a)(4) applies is less than the amount of the loss with respect to the disposition of the subsidiary's stock, the gain is applied to offset loss with respect to each share disposed of as a consequence of the same plan or arrangement in proportion to the amount of the loss deduction that would have been disallowed under paragraph (a)(1) of this section with respect to such share before the application of this paragraph (a)(4). If the same item of gain could be taken into account more than once in limiting the application of paragraphs (a)(1) and (b)(1) of this section, the item is taken into account only once.

(5) *Examples.* For purposes of the examples in this section, unless otherwise stated, all corporations have only one class of stock outstanding, all groups file consolidated returns on a calendar-year basis, the facts set forth the only corporate activity, all transactions are between unrelated persons, and tax liabilities are disregarded. The basis of each asset is the same for determining earnings and profits adjustments and taxable income. References to the investment adjustment system are references to the rules of §§1.1502–19, 1.1502–32 and 1.1502–33. The principles of this paragraph (a) are illustrated by the following examples.

Example 1. Loss attributable to recognized built-it gain. P buys all the stock of T for $100, and T becomes a member of the P group. T has an asset with a basis of $0 and a value of $100. T sells the asset for $100. Under the investment adjustment system, P's basis in the T stock increases to $200. Five years later, P sells all the T stock for $100 and recognizes a loss of $100. Under paragraph (a)(1) of this section, no deduction is allowed to P for the $100 loss.

Example 2. Effect of post-acquisition appreciation. P buys all the stock of T for $100, and T becomes a member of the P group. T has an asset with a basis of $0 and a value of $100. T sells the asset for $100. Under the investment adjustment system, P's basis in the T stock increases to $200. T reinvests the proceeds of the sale in an asset that appreciates in value to $180. Five years after the sale, P sells all the stock of T for $180 and recognizes a $20 loss. Under paragraph (a)(1) of this section, no deduction is allowed to P for the $20 loss.

Example 3. Disallowance of duplicated loss. P forms S with a contribution of $100 in exchange for all of the S stock, and S becomes a member of the P group. S has an operating loss of $60. The group is unable to use the loss, and the loss becomes a consolidated net operating loss carryover attributable to S. Five years later, P sells the stock of S for $40, recognizing a $60 loss. Under paragraph (a)(1) of this section, P's $60 loss on the sale of the S stock is disallowed. (See paragraph (g) of this section for the elective reattribution of S's $60 net operating loss to P in connection with the sale.)

Example 4. Deemed asset sale election. (i) P forms S with a contribution of $100 in exchange for all of the S stock, and S becomes a member of the P group. S buys an asset for $100, and the value of the asset declines to $40. P sells all the S stock to P1 for $40. Under paragraph (a)(1) of this section, P's $60 loss on the sale of the S stock is disallowed.

(ii) If P and P1 instead elect deemed asset sale treatment under section 338 (h) (10), S is treated as selling all of its assets, and no loss is recognized by P on its sale of the S stock. As a result of the recharacterization of the stock sale as an asset sale, the $60 loss in the asset is recognized. Under section 338 (h)(10), S's $60 loss is included in the consolidated return of the P group, and S is treated as liquidating into P under section 332 following the deemed asset sale. Paragraph (a)(1) of this section does not apply to S's $60 loss.

Example 5. Gain and loss recognized with respect to stock as a consequence of the same plan or arrangement. P, the common parent of a group, owns 50 shares of the stock of T with an aggregate basis of $50, and S, a wholly

owned subsidiary of P, owns the remaining 50 shares of T's stock with an aggregate basis of $100. All of the stock has the same terms. P and S sell all the T stock to the public for $140 pursuant to a single public offering. P therefore recognizes a gain of $20 and S recognizes a loss of $30. For purposes of paragraph (a)(4) of this section, the gain and loss recognized by P and S is considered to be a consequence of the same plan or arrangement. Accordingly, the amount of S's $30 loss disallowed under paragraph (a)(1) of this section is limited to $10 (the $30 reduced by P's $20 gain).

Example 6. Deferred loss and recognized gain. (i) P is the common parent of a consolidated group, S is a wholly owned subsidiary of P, and T is a recently purchased, wholly owned subsidiary of S. S has a $100 basis in the T stock, and T has an asset with a basis of $40 and a value of $100. T sells the asset for $100, recognizing a $60 gain. Under the investment adjustment system, S's basis in the T stock increases from $100 to $160. S sells its T stock to P for $100 in an intercompany transaction, recognizing a $60 intercompany loss that is deferred under section 267(f) and § 1.1502–13. P subsequently sells all the stock of T for $100 to X, a member of the same controlled group (as defined in section 267(f)) as P but not a member of the P consolidated group.

(ii) Under paragraph (a)(3)(i) of this section, the application of paragraph (a)(1) of this section to S's $60 intercompany loss on the sale of its T stock to P is deferred, because S's intercompany loss is deferred under section 267(f) and § 1.1502–13. P's sale of the T stock to X ordinarily would result in S's intercompany loss being taken into account under the matching rule of § 1.1502–13(c). The deferred loss is not taken into account under § 1.267(f)–1, however, because P's sale to X (a member of the same controlled group as P) is a second intercompany transaction for purposes of section 267(f). Nevertheless, paragraph (a)(3)(ii) of this section provides that paragraph (a)(1) of this section applies to the intercompany loss as a result of P's sale to X because the T stock ceases to be owned by a member of the P consolidated group. Thus, the loss is disallowed under paragraph (a)(1) of this section immediately before P's sale and is therefore never taken into account under section 267(f).

(iii) The facts are the same as in (i) of this *Example,* except that S is liquidated after its sale of the T stock to P, but before P's sale of the T stock to X, and P sells the T stock to X for $110. Under §§ 1.1502–13(j) and 1.267(f)–1(b), P succeeds to S's intercompany loss as a result of S's liquidation. Thus, paragraph (a)(3)(i) of this section continues to defer the application of paragraph (a)(1) of this section until P's sale to X. Under paragraph (a)(4) of this section, the amount of S's $60 intercompany loss disallowed under paragraph (a)(1) of this section is limited to $50 because P's $10 gain on the disposition of the T stock is taken into account as a consequence of the same plan or arrangement.

(iv) The facts are the same as in (i) of this *Example,* except that P sells the T stock to A, a person related to P within the meaning of section 267(b)(2). Although S's intercompany loss is ordinarily taken into account under the matching rule of § 1.1502–13(c) as a result of P's sale, § 1.267(f)–1(c)(2)(ii) provides that none of the intercompany loss is taken into account because A is a nonmember that is related to P under section 267(b). Under paragraph (a)(3)(i) of this section, paragraph (a)(1) of this section does not apply to loss that is disallowed under any other provision. Because § 1.267(f)–1(c)(2)(ii) and section 267(d) provide that the benefit of the intercompany loss is retained by A if the property is later disposed of at a gain, the intercompany loss is not disallowed for purposes of paragraph (a)(3)(i) of this section. Thus, the intercompany loss is disallowed under paragraph (a)(1) of this section immediately before P's sale and is therefore never taken into account under section 267(d).

(b) *Basis reduction on deconsolidation*—(1) *General rule.* If a member's basis in a share of stock of a subsidiary exceeds its value immediately before a deconsolidation of the share, the basis of the share is reduced at that time to an amount equal to its value. If both a disposition and a deconsolidation occur with respect to a share in the same transaction, paragraph (a) of this section applies and, to the extent necessary to effectuate the purposes of this section, this paragraph (b) applies following the application of paragraph (a) of this section.

(2) *Deconsolidation.* Deconsolidation means any event that causes a share of stock of a subsidiary that remains outstanding to be no longer owned by a member of any consolidated group of which the subsidiary is also a member.

(3) *Value. Value* means fair market value.

(4) *Netting.* Paragraph (b)(1) of this section does not apply to reduce the basis of stock of a subsidiary, to the extent that, as a consequence of the same plan or arrangement as that giving rise to the deconsolidation, gain is taken into account by members with respect to stock of the same subsidiary having the same material terms. If the gain to which this paragraph (b)(4) applies is less than the amount of basis reduction with respect to shares of the subsidiary's stock, the gain is applied

to offset basis reduction with respect to each share deconsolidated as a consequence of the same plan or arrangement in proportion to the amount of the reduction that would have been required under paragraph (b)(1) of this section with respect to such share before the application of this paragraph (b)(4). If the same item of gain could be taken into account more than once in limiting the application of paragraphs (a)(1) and (b)(1) of this section, the time is taken into account only once.

(5) *Loss within 2 years after basis reduction*—(i) *In general.* If a share is deconsolidated and a direct or indirect disposition of the share occurs within 2 years after the date of the deconsolidation, a separate statement entitled ''Statement Pursuant to Section §1.1502–20(b)(5)'' must be filed with the taxpayer's return for the year of disposition. If the taxpayer fails to file the statement as required, no deduction is allowed for any loss recognized with respect to the disposition. A disposition after the 2-year period described in this paragraph (b)(5) that is pursuant to an agreement, option, or other arrangement entered into within the 2-year period is treated as a disposition within the 2-year period for purposes of this section.

(ii) *Contents of statement.* The statement required under paragraph (b)(5)(i) of this section must contain—

(A) The name and employer identification number (E.I.N.) of the subsidiary.

(B) The amount of prior basis reduction (if any) with respect to the stock of the subsidiary under paragraph (b)(1) of this section.

(C) The basis of the stock of the subsidiary immediately before the disposition.

(D) The amount realized on the disposition.

(E) The amount of the loss recognized on the disposition.

(6) *Examples.* The principles of this paragraph (b) are illustrated by the following examples.

Example 1. Simultaneous application of loss disallowance rule and basis reduction rule to stock of the same subsidiary. (i) P buys all the stock of T for $100, and T becomes a member of the P group. T has an asset with a basis of $0 and a value of $100. T sells the asset for $100. Under the investment adjustment system, P's basis in the T stock increases to $200. Five years later, P sells 60 shares of T stock for $60 and recognizes $60 loss on the sale. The sale causes a deconsolidation of the remaining 40 shares of T stock held by P.

(ii) P's $60 loss on the sale of T stock is disallowed under paragraph (a)(1) of this section. Under paragraph (b)(1) of this section, P must reduce the basis of the 40 shares of T stock it continues to own from $80 to $40, the value of the shares immediately before the deconsolidation.

(iii) Although P's disposition of the 60 shares also causes a deconsolidation of these shares, paragraph (b)(1) of this section provides that, if both paragraph (a) and paragraph (b) of this section apply to a share in the same transaction, paragraph (a) of this section applies first and this paragraph (b) applies only to the extent necessary to effectuate the purposes of this section. Under paragraph (a)(1) of this section, P's $60 loss on the sale of the 60 shares is disallowed. Under the facts of this example, it is not necessary to also apply this paragraph (b) to the 60 shares in order to effectuate the purposes of this section.

Example 2. Deconsolidation of subsidiary stock on contribution to a partnership. (i) P buys all the stock of T for $100, and T becomes a member of the P group. T has an asset with a basis of $0 and a value of $100. T sells the asset for $100. Under the investment adjustment system, P's basis in the T stock increases to $200. Five years later, P transfers all the stock of T to partnership M in exchange for a partnership interest in M, in a transaction to which section 721 applies.

(ii) At the time of the exchange, P's basis in the T stock is $200 and the T stock's value is $100. Under paragraph (b) of this section, the transfer to M causes a deconsolidation of the T stock, and P must reduce its basis in the T stock, immediately before the transfer to M, from $200 to the stock's $100 value at the time of the transfer. As a result, P has a basis of $100 in its interest in M, and M has a basis of $100 in the stock of T.

Example 3. Simultaneous application of loss disallowance and basis reduction to stock of different subsidiaries. (i) P owns all the stock of S, which in turn owns all the stock of S1, and S and S1 are members of the P group. P's basis in the S stock is $100 and S's basis in the S1 stock is $100. S1 buys all the stock of T for $100, and T becomes a member of the P group. T has an asset with a basis of $0 and a value of $100. T sells the asset for $100. Under the investment adjustment system, S1's basis in the T stock, S's basis in the S1 stock, and P's basis in the S stock each increase from $100 to $200. S then sells all the S1 stock for $100 and recognizes a loss of $100.

(ii) Under paragraph (a)(1) of this section, S's $100 loss on the sale of the S1 stock is disallowed.

(iii) If S1 and T are not members of a consolidated group immediately after the sale of the stock of S1, the T stock is deconsolidated and, under paragraph (b)(1) of this section, S1 must reduce the basis of the T stock to its $100 value immediately before the sale.

(iv) If S1 and T are members of a consolidated group immediately after the sale of the S1 stock, the T stock is not deconsolidated, and no reduction is required under paragraph (b)(1) of this section.

Example 4. Extending the time period for dispositions. (i) In Year 1, P, the common parent of a group, buys all 100 shares of the stock of T for $100. T's only asset has a basis of $0 and a value of $100. T sells the asset for $100. Under the investment adjustment system, P's basis in the T stock increases from $100 to $200. At the beginning of Year 5, P causes T to issue 30 additional shares of stock to the public for $30. This issuance causes a deconsolidation of the T stock owned by P, and paragraph (b)(1) of this section requires P to reduce its basis in the T stock from $200 to $100.

(ii) Within 2 years after the date of the basis reduction, P agrees to sell all of its T stock for $90 at the end of Year 7. Under paragraph (b)(5) of this section, P's disposition of the T stock at the end of Year 7 is treated as occurring within the 2-year period following the basis reduction, because the disposition is pursuant to an agreement reached within 2 years after the basis reduction. Accordingly, P's $10 loss may not be deducted unless P files the statement required under paragraph (b)(5) of this section. This result is reached whether or not the agreement is in writing. P's disposition would also have been treated as occurring within the 2-year period if the disposition were pursuant to an option issued within the period.

Example 5. Deferred loss and subsequent basis reduction. (i) P is the common parent of a consolidated group, S is a wholly owned subsidiary of P, and T is a recently purchased, wholly owned subsidiary of S. S has a $100 basis in the T stock, and T has an asset with a basis of $40 and a value of $100. T sells the asset for $100, recognizing $60 of gain. Under the investment adjustment system, S's basis in the T stock increases from $100 to $160. S sells its T stock to P for $100 in an intercompany transaction, recognizing a $60 intercompany loss that is deferred under section 267(f) and § 1.1502–13. T issues 30 additional shares of stock to the public for $30 which causes a deconsolidation of the T stock owned by P.

(ii) Under paragraph (a)(3)(i) of this section, the application of paragraph (a)(1) of this section to S's intercompany loss on the sale of its T stock to P is deferred because S's loss is deferred under section 267(f) and § 1.1502–13. Because the fair market value of the T stock owned by P is $100 immediately before the deconsolidation and P has a $100 basis in the stock at that time, no basis reduction is required under paragraph (b)(1) of this section.

(iii) T's issuance of additional shares to the public results in S's intercompany loss being taken into account under the acceleration rule of § 1.1502–13(d) because there is no difference between P's $100 basis in the T stock and the $100 basis the T stock would have had if P and S had been divisions of a single corporation. S's loss taken into account is disallowed under paragraph (a)(1) of this section.

Example 6. Gain and basis reduction with respect to the same plan or arrangement. (i) P, the common parent of a group, owns 50 shares of T stock with an aggregate basis of $50, and S, a wholly owned subsidiary of P, owns the remaining 50 shares of T stock with an aggregate basis of $100. All of the stock has the same terms. P sells all of its T stock to the public for $70 and recognizes a $20 gain. The sale causes a deconsolidation of S's 50 shares of T stock.

(ii) Under paragraph (b)(1) of this section, S must reduce the basis of its 50 shares of T stock from $100 to $70, the value of the shares immediately before the deconsolidation. However, under paragraph (b)(4) of this section, because P's $20 gain is recognized as a consequence of the same plan or arrangement as that giving rise to the deconsolidation, S's basis reduction is eliminated to the extent of $20. Thus, S must reduce the basis of its T stock from $100 to $90.

Example 7. Netting allocated between loss disallowance and basis reduction. (i) P is the common parent of a group and S is its wholly owned subsidiary. P and S each own 50 shares of T stock and each has an aggregate basis of $50. All of the stock has the same terms. S recently purchased its T stock from S1, a lower tier subsidiary, in an intercompany transaction in which S1 recognized a $30 intercompany gain that was deferred under § 1.1502–13. T has an asset with a basis of $0 and a value of $100. T sells the asset for $100, recognizing $100 of gain. Under the investment adjustment system, P and S each increase the basis of their T stock to $100. S sells all of its T stock to the public for $50 and recognizes a $50 loss. The sale causes a deconsolidation of P's T stock.

(ii) S's $50 loss on the sale of T stock is disallowed under paragraph (a)(1) of this section. Under paragraph (b)(1) of this section, P must reduce its $100 basis in the T stock to the $50 value immediately before the deconsolidation.

(iii) Under the matching rule of § 1.1502–13, S's sale of its T stock results in S1's $30 intercompany gain being taken into account. Under paragraphs (a)(4) and (b)(4) of this section, the gain may be taken into account by P and S in limiting the application of paragraphs (a)(1) and (b)(1) of this section, but it may be taken into account only once. Under

paragraph (a)(4) of this section, S may apply the gain to decrease the amount of loss disallowed under paragraph (a)(1) of this section from $50 to $20. None of the gain remains to decrease the $50 of P's basis reduction under paragraph (b)(1) of this section. (P may instead apply the gain to decrease the basis reduction under paragraph (b)(1) of this section instead of S decreasing its disallowed loss, but if the T stock is sold within 2 years, the statement described in paragraph (b)(5) of this section must be filed if a deduction is to be allowed for any loss recognized on the disposition.)

(c) *Allowable loss*—(1) *General rule.* The amount of loss disallowed under paragraph (a)(1) of this section and the amount of basis reduction under paragraph (b)(1) of this section with respect to a share of stock shall not exceed the sum of the following amounts—

(i) *Extraordinary gain dispositions.* The amount of income or gain (or its equivalent), net of directly related expenses, that is allocated to the share from extraordinary gain dispositions.

(ii) *Positive investment adjustments.* The amount of the positive adjustment (if any) with respect to the share under §1.1502–32 for each consolidated return year, but only to the extent the amount exceeds the amount described in paragraph (c)(1)(i) of this section for the year.

(iii) *Duplicated loss.* The amount of duplicated loss with respect to the share.

(2) *Operating rules.* For purposes of applying paragraph (c)(1) of this section—

(i) *Extraordinary gain dispositions.* An ''extraordinary gain disposition'' is—

(A) An actual or deemed disposition of—

(*1*) A capital asset as defined in section 1221 (determined without the application of any other rules of law).

(*2*) Property used in a trade or business as defined in section 1231(b) (determined without the application of any holding period requirement).

(*3*) An asset described in section 1221 (1), (3), (4), or (5), if substantially all the assets in such category from the same trade or business are disposed of in one transaction (or series of related transactions).

(*4*) Assets disposed of in an applicable asset acquisition under section 1060(c).

(B) A positive section 481(a) adjustment.

(C) A discharge of indebtedness.

(D) Any other event (or item) identified in guidance published in the Internal Revenue Bulletin.

An extraordinary gain disposition is taken into account under paragraph (c)(1)(i) of this section only if it occurs on or after November 19, 1990. For this purpose, federal income taxes may be directly related to extraordinary gain dispositions only to the extent of the excess (if any) of the group's income tax liability actually imposed under subtitle A of the Internal Revenue Code for the taxable year of the extraordinary gain dispositions over the group's income tax liability for the taxable year redetermined by not taking into account the extraordinary gain dispositions. For this purpose, the group's income tax liability actually imposed and its redetermined income tax liability are determined without taking into account the foreign tax credit under section 27(a) of the Code.

(ii) *Positive investment adjustments.* For purposes of paragraph (c)(1)(ii) of this section, a positive adjustment under §1.1502–32 is the sum of the amounts under §1.1502–32(b)(2) (i) through (iii) for the consolidated return year (the adjustment determined without taking distributions into account). However, amounts included in any loss carryover are taken into account in the year they arise rather than the year absorbed.

(iii) *Applicable amounts.* Amounts are described in paragraphs (c)(1)(i) and (ii) of this section only to the extent they are reflected in the basis of the share, directly or indirectly, immediately before the disposition or deconsolidation. For this purpose, an amount is reflected in the basis of a share if the share's basis would have been different without the amount. However, amounts included in any loss carryover are taken into account in the year they arise rather than the year absorbed.

(iv) *Related party rule.* The amounts described in paragraphs (c)(1) (i) and (ii) of this section are not reduced or eliminated by reason of an acquisition of the share from a person related within the meaning of section 267(b) or

section 707(b)(1), substituting ''10 percent'' for ''50 percent'' each place that it appears, even if the share is not transferred basis property as defined in section 7701 (a)(43).

(v) *Pre-September 13, 1991 positive investment adjustments—(A) In general.* The amount determined under paragraph (c)(1)(ii) of this section is limited for tax years of the subsidiary ending on or before September 13, 1991. The amount may not exceed the net increase, if any, in the basis of the share from—

(*1*) The date the share was first acquired by a member (whether or not a member at that time); to

(*2*) The end of the last taxable year ending on or before September 13, 1991 (or, if earlier, the date of the disposition or deconsolidation). If the share is transferred basis property (within the meaning of section 7701 (a)(43) from a prior consolidated group, the date under paragraph (c)(2)(v)(A)(*1*) of this section is the date the share was first acquired by a member of the prior group. For purposes of this paragraph (c)(2)(v)(A), an increase in an excess loss account is treated as a decrease in stock basis and a decrease in an excess loss account is treated as an increase in stock basis.

(B) *Cessation of netting.* If a lower amount would result under paragraph (c)(1)(ii) of this section by determining the amount under this paragraph (c)(2)(v) as of the end of an earlier taxable year ending after December 31, 1986—

(*1*) The amount under this paragraph (c)(2)(v) is determined as of the earlier year end; and

(*2*) The amount determined under paragraph (c)(1)(ii) of this section is not limited for tax years of the subsidiary ending after the earlier year end.

(vi) *Duplicated loss.* ''Duplicated loss'' is determined immediately after a disposition or deconsolidation, and equals the excess (if any) of—

(A) The sum of—

(*1*) The aggregate adjusted basis of the assets of the subsidiary other than any stock and securities that the subsidiary owns in another subsidiary, and

(*2*) Any losses attributable to the subsidiary and carried to the subsidiary's first taxable year following the disposition or deconsolidation, and

(*3*) Any deferred deductions (such as deductions deferred under section 469) of the subsidiary, over

(B) The sum of—

(*1*) The value of the subsidiary's stock, and

(*2*) Any liabilities of the subsidiary, and

(*3*) Any other relevant items.

The amounts determined under this paragraph (c)(2)(vi) with respect to a subsidiary include its allocable share of corresponding amounts with respect to all lower tier subsidiaries. If 80 percent or more in value of the stock of a subsidiary is acquired by purchase in a single transaction (or in a series of related transactions during any 12-month period), the value of the subsidiary's stock may not exceed the purchase price of the stock divided by the percentage of the stock (by value) so purchased. For this purpose, stock is acquired by purchase if the transferee is not related to the transferor within the meaning of sections 267(b) and 707(b)(1), substituting ''10 percent'' for ''50 percent'' each place that it appears, and the transferee's basis in the stock is determined wholly by reference to the consideration paid for such stock.

(vii) *Disallowance amounts applied only once.* The amounts described in paragraph (c)(1) of this section are not applied more than once to disallow a loss, reduce basis, or reattribute loss under this section.

(3) *Statement of allowed loss.* Paragraph (c)(1) of this section applies only if the separate statement required under this paragraph (c)(3) is filed with the taxpayer's return for the year of the disposition or deconsolidation. The statement must be entitled ''ALLOWED LOSS UNDER SECTION 1.1502–20(c)'' and must contain—

(i) The name and employer identification number (E.I.N.) of the subsidiary.

(ii) The basis of the stock of the subsidiary immediately before the disposition or deconsolidation.

(iii) The amount realized on the disposition and the amount of fair market value on the deconsolidation.

(iv) The amount of the deduction not disallowed under paragraph (a)(1) of

this section by reason of this paragraph (c) and the amount of basis not reduced under paragraph (b)(1) of this section by reason of this paragraph (c).

(v) The amount of loss disallowed under paragraph (a)(1) of this section and the amount of basis reduced under paragraph (b)(1) of this section.

(4) *Examples.* For purposes of the examples in this paragraph, unless otherwise stated, the group files the statement required under paragraph (c)(3) of this section. The principles of this paragraph (c) are illustrated by the following examples.

Example 1. Allowable loss attributable to lost built-in gain. (i) Individual A forms T. P buys all the stock of T from A for $100, and T becomes a member of the P group. T has a capital asset with a basis of $0 and a value of $100. The value of the asset declines, and T sells the asset for $40. Under the investment adjustment system, P's basis in the T stock increases to $140. P then sells all the stock of T for $40 and recognizes a loss of $100.

(ii) The amount of the $100 loss disallowed under paragraph (a)(1) of this section may not exceed the amount determined under paragraph (c)(1) of this section. Under paragraphs (c)(2) (i) and (iii) of this section, T's $40 gain is from an extraordinary gain disposition and the amount is reflected in the basis of the T stock under §1.1502–32 immediately before the disposition. Thus, the gain is described in paragraph (c)(1)(i) of this section. Because this amount is the only amount described in paragraph (c)(1) of this section, the amount of P's $100 loss that is disallowed under paragraph (a)(1) of this section is limited to $40. (No amount is described in paragraph (c)(1)(ii) of this section because the amount of T's positive investment adjustments does not exceed the amount included under paragraph (c)(1)(i) of this section.)

(iii) The results would be the same if the asset, instead of being owned by T, is owned by a partnership in which T is a partner and T is allocated the $40 of gain under section 704(b). Under paragraphs (c)(2) (i) and (iii) of this section, T's $40 gain is from an extraordinary gain disposition, and the gain is reflected in the basis of the T stock under §1.1502–32 immediately before the disposition.

Example 2. Extraordinary gain dispositions. (i) Individual A forms T. P buys all the stock of T from A for $100 in Year 1, and T becomes a member of the P group. T owns a capital asset, asset 1, with a basis of $0 and a value of $100. T sells asset 1 for $100 in Year 1 and invests the proceeds in a trade or business asset, asset 2. For Year 2, asset 2 produces $30 of gross operating income and $20 of cost recovery deductions. On December 31 of Year 2, asset 2 has an $80 adjusted basis and T disposes of asset 2 for $85; however, because T incurs $20 of expenses directly related to the sale of asset 2, the disposition produces a $15 loss that is taken into account in the determination of taxable income or loss under §1.1502–32(b)(2)(i) (the loss offsets T's $10 of operating income for Year 2, as well as $5 of operating income of P in that year). Under the investment adjustment system, P's basis in the T stock increases by $95, to $195, because T has $110 of income and a $15 loss. P sells the T stock for $95 in Year 5 and recognizes a $100 loss.

(ii) Under paragraphs (c)(2) (i) and (iii) of this section, the $100 gain from the disposition of asset 1 is from an extraordinary gain disposition and is reflected in the basis of the T stock. Thus, the gain is described in paragraph (c)(1)(i) of this section. The sale of asset 2 is not taken into account under paragraph (c)(1)(i) of this section because, net of directly related expenses, T does not have income or gain from the sale. (No amount is described under paragraph (c)(1)(ii) of this section because T's positive investment adjustments are taken into account under paragraph (c)(1)(i) of this section.) Because the $100 amount described under paragraph (c)(1)(i) of this section equals P's $100 loss from the disposition of the T stock, all of the loss is disallowed.

Example 3. Positive investment adjustments. (i) Individual A forms T. S, a member of the P group, buys all the stock of T from A for $100, and T becomes a member of the P group. T has an asset with a basis of $0 and a value of $100. The asset earns $100 of operating income in Year 1 and declines in value to $0. T invests the operating income in another asset that produces a $25 operating loss for Year 2. Under the investment adjustment system, S's basis in the T stock increases to $200 at the end of Year 1, and decreases to $175 at the end of Year 2. S sells all the stock of T for $75 in Year 5 and recognizes a loss of $100.

(ii) Under paragraph (c)(1)(ii) of this section, the $100 of income from Year 1 is a positive investment adjustment. The amount is not reduced by the $25 operating loss for Year 2. Because the $100 amount described under paragraph (c)(1)(ii) of this section equals S's $100 loss from the disposition of the T stock, all of the loss is disallowed.

Example 4. Treatment of net operating income as attributable to built-in gain. (i) Individual A forms T. P buys all the stock of T from A for $100, and T becomes a member of the P group. T has a capital asset with a basis of $0 and a value of $100. The asset declines in value to $40. The asset earns $100 of operating income unrelated to its $60 decline in value. Under the investment adjustment system, P's basis in the T stock increases to $200. P then sells all the stock of T for $140

(the asset worth $40 and $100 cash) and recognizes a loss of $60.

(ii) The $100 adjustment to the basis of the T stock is an amount described in paragraph (c)(1)(ii) of this section. Because this amount exceeds the amount of loss otherwise disallowed under paragraph (a)(1) of this section, P's entire $60 loss from the disposition of T stock is disallowed.

Example 5. Carryover basis transactions—amounts attributable to separate return years. (i) Individual A forms T. S purchases all the stock of T from A for $100, and T becomes a member of the S group. T has a capital asset with a basis of $0 and a value of $100. T sells the asset for $100. Under the investment adjustment system, S's basis in the T stock increases to $200. P buys all of the stock of S for $100, and both S and T become members of the P group. S then sells the T stock for $100 and recognizes a loss of $100.

(ii) Under paragraph (c)(2)(iii) of this section, the $100 adjustment to S's basis in the T stock while a member of the S group is an amount described in paragraph (c)(1)(i) of this section with respect to the P group because it continues to be reflected in the basis of the T stock immediately before the stock is disposed of. Because this amount equals the loss otherwise disallowed under paragraph (a)(1) of this section, S's $100 loss from the disposition of T stock is disallowed.

Example 6. Cost basis for subsidiary stock. (i) In Year 1, individual A forms T. T's assets appreciate in value from $0 to $100, and T recognizes $100 of gain in an extraordinary gain disposition. T reinvests the sale proceeds in assets that appreciate in value to $150. In Year 3, A sells all of the T stock to P for $150, and T becomes a member of the P group. While a member of the P group, T's assets decline in value to $130 and P sells the T stock in Year 7 for $130 and recognizes a $20 loss.

(ii) Although T has a $100 gain from extraordinary gain dispositions, the gain is not reflected in P's basis in the T stock within the meaning of paragraph (c)(2)(iii) of this section. P's basis reflects the stock's value at the time of P's purchase, and is determined without regard to whether T recognized the gain before the purchase. Thus, no part of T's gain is described in paragraph (c)(1) of this section, and no part of the $20 loss is disallowed under paragraph (a) of this section. (For rules that apply if A and P are related persons, see paragraph (c)(2)(iv) of this section.)

Example 7. Adjustments to stock basis under applicable rules of law. (i) Individual A forms T, and T's assets subsequently appreciate. T borrows $100 on a nonrecourse basis secured by the appreciated assets. P buys all of the stock of T from A for $150. After becoming a member of the P group, T has a $100 operating loss that is absorbed in the determination of consolidated taxable income and P's basis in the T stock is reduced to $50 under §1.1502–32. Because T's assets have declined in value, T's creditors discharge $60 of T's indebtedness. The $60 discharge is not included in T's gross income under section 108(a), but no attributes are reduced under section 108(b).

(ii) Under paragraph (c)(2)(i) of this section, the discharge of indebtedness is an extraordinary gain disposition. Under §1.1502–32(b)(3)(ii), however, the $60 discharge of indebtedness is not treated as tax-exempt income that increases P's basis in the T stock. Consequently, under paragraph (c)(2)(iii) of this section, T's discharge of indebtedness income is not reflected in P's basis in the T stock. Thus, there is no amount under paragraph (c)(1) of this section.

(iii) The facts are the same as in paragraph (i) of this *Example*, except that $60 of T's operating loss is not absorbed and is included in a consolidated net operating loss that is carried over under §§1.1502–21A or 1.1502–21, and the $60 is eliminated from the carryover under section 108(b) as a result of T's discharge of indebtedness. The absorption of $40 of T's loss reduces P's basis in the T stock from $150 to $110. The $60 discharge of indebtedness is treated as tax-exempt income that increases P's basis in the T stock, and the $60 attribute reduction is treated as a noncapital, nondeductible expense that reduces P's basis in the T stock. Thus, P's basis in T's stock remains $110 following the discharge and attribute reduction. Because P's basis is $110, rather than $50, the discharge of indebtedness income is reflected in P's basis for purposes of paragraph (c)(2)(iii) of this section. Thus, the amount under paragraph (c)(1)(i) of this section is $60.

Example 8. Duplicated loss. (i) Individual A forms T with a contribution of $100 in exchange for all of the T stock. Individual B forms T1 with a contribution of land that has a $90 basis and $100 value. T buys all the stock of T1 from B for $100. P buys all the stock of T from A for $100, and both T and T1 become members of the P group. The value of T1's land declines to $40. P sells all of the T stock for $40 and recognizes a loss of $60.

(ii) Under paragraph (c)(1)(iii) of this section, P's amount of duplicated loss is $50. This is computed under paragraph (c)(2)(vi) of this section immediately after the disposition as the excess of—

(A) The $90 aggregate adjusted basis of the assets of T and T1 (other than stock and securities of T1 owned by T), over

(B) The $40 fair market value of the T stock (determined under paragraph (c)(2)(vi) of this section). Because this amount is the only amount described in paragraph (c)(1) of this section, the amount of P's $60 loss disallowed under paragraph (a)(1) of this section is limited to $50.

(iii) The result would be the same if the value of T1's property did not decline and T1

instead had an operating loss of $60 (attributable to borrowed funds) which the P group was unable to use. In that case, the $50 excess of the sum of—

(A) The $90 aggregate adjusted basis of the assets of T and T1 (other than stock and securities of members of the P group), plus the $60 net operating loss attributable to T1 and carried to its first taxable year following the disposition, over

(B) The sum of the $40 fair market value of the T stock, plus the $60 of T1 liabilities, is an amount described in paragraph (c)(2)(vi) of this section. (See paragraph (g) of this section for the elective reattribution of T1's $60 net operating loss to P in connection with the sale.)

Example 9. Intercompany stock sales. (i) P is the common parent of a consolidated group, S is a wholly owned subsidiary of P, and T is a wholly owned recently purchased subsidiary of S. S has a $100 basis in the T stock, and T has a capital asset with a basis of $0 and a value of $100. T's asset declines in value to $60. Before T has any positive investment adjustments or extraordinary gain dispositions, S sells its T stock to P for $60. T's asset reappreciates and is sold for $100, and T recognizes $100 of gain. Under the investment adjustment system, P's basis in the T stock increases to $160. P then sells all of the T stock for $100 and recognizes a loss of $60.

(ii) S's sale of the T stock to P is an intercompany transaction. Thus, S's $40 loss is deferred under section 267(f) and § 1.1502–13. Under paragraph (a)(3) of this section, the application of paragraph (a)(1) of this section to S's $40 loss is deferred until the loss is taken into account. Under the matching rule of § 1.1502–13(c), the loss is taken into account to reflect the difference for each year between P's corresponding items taken into account and P's recomputed corresponding items (the corresponding items that P would take into account for the year if S and P were divisions of a single corporation). If S and P were divisions of a single corporation and the intercompany sale were a transfer between the divisions, P would succeed to S's $100 basis and would have a $200 basis in the T stock at the time it sells the T stock ($100 of initial basis plus $100 under the investment adjustment system). S's $40 loss is taken into account at the time of P's sale of the T stock to reflect the $40 difference between the $60 loss P takes into account and P's recomputed $100 loss.

(iii) Under the matching rule of § 1.1502–13(c), the attributes of S's $40 loss and P's $60 loss are redetermined to produce the same effect on consolidated taxable income (and consolidated tax liability) as if S and P were divisions of a single corporation. Under § 1.1502–13(b)(6), attributes of the losses include whether they are disallowed under this section. Because the amount described in paragraph (c)(1) of this section is $100, both S's $40 loss and P's $60 loss are disallowed.

(d) *Successors*—(1) *General rule.* This section applies, to the extent necessary to effectuate the purposes of this section, to any property the basis of which is determined, directly or indirectly, in whole or in part, by reference to the basis of a subsidiary's stock.

(2) *Examples.* The principles of this paragraph (d) are illustrated by the following examples.

Example 1. Status of successor as member. (i) P, the common parent of a group, buys all the stock of T for $100. T's only asset has a basis of $0 and a value of $100. T sells the asset for $100, and buys another asset for $100. Under the investment adjustment system, P's basis in the T stock increases to $200, and the earnings and profits of P increase by $100. P later transfers all the stock of T to an unrelated consolidation group in exchange for 10 percent of the stock of X, the common parent of that group, in a transaction described in section 368(a)(1)(B). At the time of the exchange, the value of the X stock received by P is $80.

(ii) Under section 358, P has a basis of $200 in the X stock it receives in exchange for T. Under section 362, X has a $200 basis in the T stock.

(iii) Neither paragraph (a)(1) nor (b)(1) of this section applies to the stock of T on P's transfer of the stock to the X group, because no gain or loss is recognized on the transfer, and the transfer is not a deconsolidation of the stock of T under paragraph (b)(2) of this section.

(iv) The X stock owned by P after the reorganization is a successor interest to the T stock because P's basis in the X stock is determined by reference to P's basis in the T stock. The purposes of this section require that the reorganization exchange be treated as a deconsolidation event with respect to P's interest in the X stock. Because X is not a member of the P group, a failure to reduce the basis of the X stock owned by P to its fair market value would permit the P group to recognize and deduct the loss attributable to the T stock. However, because T is a member of the X group, a reduction in the basis of the T stock is not necessary to prevent the X group from recognizing and deducting the loss arising in the P group. The transfer of T stock to X therefore constitutes a deconsolidation of the X stock but not the T stock. Therefore, P must reduce its basis in the X stock from $200 to its $80 value at that time. However, X's basis in the T stock remains $200.

Example 2. Continued application after deconsolidation. (i) P, the common parent of a group, buys all the stock of T for $100. T's

only asset has a basis of $0 and a value of $100. T sells the asset for $100, and buys another asset for $100. Under the investment adjustment system, P's basis in the T stock increases to $200. P later transfers all the stock of T to partnership M in exchange for a partnership interest in M, in a transaction to which section 721 applies. The value of the T stock immediately before the transfer to M is $100. Less than 2 years later, P sells its interest in M for $80.

(ii) Under paragraph (b)(1) of this section, because the stock of T is deconsolidated on the transfer to M, immediately before the transfer to M, P reduces its basis in the T stock to the stock's $100 value immediately before the transfer. As a result, P has a basis of $100 in its interest in M, and M has a basis of $100 in the T stock.

(iii) When P sells its interest in M for $80, it recognizes a $20 loss. Because the basis of P's interest in M is determined by reference to P's basis in the T stock, and the reporting requirements could otherwise be circumvented, P's partnership interest in M is a successor interest to the T stock. Under paragraph (b)(5) of this section, P is required to file a statement with its return for the year of its disposition of its interest in M in order to deduct its loss. If P does not file the required statement described in paragraph (b)(5) of this section, P's loss on the disposition of its interest in M is disallowed.

(e) *Anti-avoidance rules*—(1) *General rule.* The rules of § 1.1502–20 must be applied in a manner that is consistent with and reasonably carries out their purposes. If a taxpayer acts with a view to avoid the effect of the rules of this section, adjustments must be made as necessary to carry out their purposes.

(2) *Anti-stuffing rule*—(i) *Application.* This paragraph (e)(2) applies if—

(A) A transfer of any asset (including stock and securities) on or after March 9, 1990 is followed within 2 years by a direct or indirect disposition or a deconsolidation of stock, and

(B) The transfer is with a view to avoiding, directly or indirectly, in whole or in part—

(*1*) The disallowance of loss on the disposition or the basis reduction on the deconsolidation of stock of a subsidiary, or

(*2*) The recognition of unrealized gain following the transfer.

A disposition or deconsolidation after the 2-year period described in this paragraph (e)(2)(i) that is pursuant to an agreement, option, or other arrangement entered into within the 2-year period is treated as a disposition or deconsolidation within the 2-year period for purposes of this section.

(ii) *Basis reduction.* If this paragraph (e)(2) applies, the basis of the stock is reduced, immediately before the disposition or deconsolidation, to cause the disallowance of loss, the reduction of basis, or the recognition of gain, otherwise avoided by reason of the transfer.

(3) *Examples.* The principles of this paragraph (e) are illustrated by the following examples.

Example 1. Shifting of value. (i) P buys all the stock of T for $100, and T becomes a member of the P group. T has an asset with a basis of $0 and a value of $100. With the view described in paragraph (e)(1) of this section, P transfers land with a value of $100 and a basis of $100 to T in exchange for preferred stock with a $200 redemption price and liquidation preference. The $100 redemption premium (the excess of the $200 redemption price over the $100 issue price) ultimately increases the value of the preferred stock from $100 to $200 (and decreases the value of the common stock). T sells the built-in gain asset for $100, and P's aggregate basis in S's common and preferred stock increases to $300. In addition, as a result of a cumulative redetermination under § 1.1502–32(c)(4), P's basis in the T preferred stock increases from $100 to $200 and P's basis in the common stock remains $100. P subsequently sells the common stock at a loss.

(ii) Under section 305, the redemption premium is treated as a distribution of property to which section 301 and § 1.1502–13(f)(2) apply. Under §§ 1.1502–13 and 1.1502–32, P's aggregate basis in the preferred and common stock is unaffected by the deemed distributions.

(iii) P's loss on the sale of the common stock is disallowed under paragraph (e)(1) of this section. This disallowance prevents the preferred stock from shifting value and stock basis adjustments from the common stock to avoid the disallowance of loss under this section.

Example 2. Basic stuffing case. (i) In Year 1, P buys all the stock of T for $100, and T becomes a member of the P group. T has an asset with a basis of $0 and a value of $100. T sells the asset for $100. Under the investment adjustment system, P's basis in the T stock increases from $100 to $200. In Year 5, P transfers to T an asset with a basis of $0 and a value of $100 in a transaction to which section 351 applies, with the view described in paragraph (e)(2)(i) of this section. In Year 6, P sells all the stock of T for $200.

(ii) Under paragraph (e)(2)(ii) of this section, P must reduce the basis in its T stock by $100 immediately before the sale. This

basis reduction causes a $100 gain to be recognized on the sale.

(iii) The $100 basis reduction also would be required if the T stock is deconsolidated in Year 6 instead of being sold. P must reduce the basis in its T stock by $100 immediately before the deconsolidation.

(iv) The $100 basis reduction also would be required if the P stock were acquired at the beginning of Year 6 by the M consolidated group, even though the asset transfer took place outside the M group. Paragraph (e)(2)(i) of this section requires only that the transferor have the view at the time of the transfer.

Example 3. Stacking rules. (i) In Year 1, P buys all the stock of T for $100, and T becomes a member of the P group. T has an asset with a basis of $0 and a value of $100. T sells the asset for $100. Under the investment adjustment system, P's basis in the T stock increases from $100 to $200. In Year 5, when the value of the T stock remains $100, P transfers to T an asset with a basis of $0 and a value of $100 in a transaction to which section 351 applies, with the view described in paragraph (e)(2)(i) of this section. Thereafter, the value of the contributed asset declines to $10. In Year 6, P sells all the T stock for $110 and recognizes a $90 loss.

(ii) Because the transferred asset declined in value by $90, the transfer enabled P to avoid the disallowance of loss by the sale of T only to the extent of $10. Under paragraph (e)(2)(ii) of this section, P must reduce the basis in its T stock immediately before the sale to cause recognition of gain in an amount equal to the loss disallowance otherwise avoided by reason of the transfer. The amount of this basis reduction is $100, causing a $10 gain to be recognized on the sale.

(iii) The facts are the same as in (i) of this *Example,* except that the transferred asset does not decline in value and that T reinvests the $100 in proceeds from the asset sale in another asset that appreciates in value to $190. In Year 6, P sells T for $290. Because the new asset appreciated in value by $90, the transfer enabled P to avoid the disallowance of loss on the sale of T only to the extent of $10. Under paragraph (e)(2)(ii) of this section, P must reduce the basis in its T stock immediately before the sale to cause recognition of gain in an amount equal to the loss disallowance otherwise avoided by reason of the transfer. The amount of this basis reduction is $10, causing a $100 gain to be recognized on the sale.

Example 4. Contribution of built-in loss asset. (i) In Year 1, P forms S with a contribution of $100 in exchange for all of S's stock, and S becomes a member of the P group. S buys an asset for $100, and the asset appreciates in value to $200. P then buys all the stock of T for $100, and T becomes a member of the P group. T has an asset with a basis of $0 and a value of $100. T sells the asset for $100, and under the investment adjustment system P's basis in the T stock increases from $100 to $200. In Year 5, when the value of the T stock remains $100, P transfers the T stock to S in a transaction to which section 351 applies, with the view described in paragraph (e)(2)(i) of this section. The transfer causes P's basis in the S stock to increase from $100 to $300 and the value of S to increase from $200 to $300. In Year 6, P sells the S stock for $300.

(ii) Under paragraph (e)(2)(ii) of this section, P must reduce the basis in its S stock immediately before the sale to cause recognition of gain in an amount equal to the gain recognition otherwise avoided by reason of the transfer. The amount of this basis reduction is $100, causing a $100 gain to be recognized on the sale.

Example 5. Absence of a view. (i) In Year 1, P buys all the stock of T for $100, and T becomes a member of the P group. T has 2 historic assets, asset 1 with a basis of $40 and value of $90, and asset 2 with a basis of $60 and value of $10. In Year 2, T sells asset 1 for $90. Under the investment adjustment system, P's basis in the T stock increases from $100 to $150. Asset 2 is not essential to the operation of T's business, and T distributes asset 2 to P in Year 5 with a view to having the group retain its $50 loss inherent in the asset. Under §1.1502–13(f)(2), and the application of the principles of this rule in section 267(f), T has a $50 intercompany loss that is deferred. Under §1.1502–32(b)(3)(iv), the distribution reduces P's basis in the T stock by $10 to $140 in Year 5. In Year 6, P sells all the T stock for $90. Under the acceleration rule of §1.1502–13(d), and the application of the principles of this rule in section 267(f), T's intercompany loss is ordinarily taken into account immediately before P's sale of the T stock. Assuming that the loss is absorbed by the group, P's basis in T's stock would be reduced from $140 to $90 under §1.1502–32(b)(3)(i), and there would be no gain or loss from the stock disposition. (Alternatively, if the loss is not absorbed and the loss is reattributed to P under paragraph (g) of this section, the reattribution would reduce P's basis in T's stock from $140 to $90.)

(ii) A $50 loss is reflected both in T's basis in asset 2 and in P's basis in the T stock. Because the distribution results in the loss with respect to asset 2 being taken into account before the corresponding loss reflected in the T stock, and asset 2 is an historic asset of T, the distribution is not with the view described in paragraph (e)(2) of this section.

Example 6. Extending the time period for dispositions. (i) In Year 1, P buys all the stock of T for $100, and T becomes a member of the P group. T has an asset with a basis of $0 and a value of $100. T sells the asset for $100. Under the investment adjustment system, P's basis in the T stock increases from $100

to $200. At the beginning of Year 5, P transfers to T an asset with a basis of $0 and a value of $100 in a transaction to which section 351 applies, with the view described in paragraph (e)(2)(i) of this section. Within 2 years, P agrees to sell all the stock of T for $200 at the end of Year 7.

(ii) Under paragraph (e)(2) (i) of this section, P's disposition of the T stock at the end of Year 7 is treated as occurring within the 2-year period following P's transfer of the asset to T, because the disposition is pursuant to an agreement reached within 2 years after the transfer. Accordingly, under paragraph (e)(2)(ii) of this section, P must reduce the basis in its T stock by $100 immediately before the sale. This result is reached whether or not the agreement is in writing. P's disposition would also have been treated as occurring within the 2-year period if the disposition were pursuant to an option issued within the period.

(f) *No tiering up of certain adjustments*—(1) *General rule.* If the basis of stock of a subsidiary (S) owned by another member (P) is reduced under this section on the deconsolidation of the S stock, no corresponding adjustment is made under §1.1502–32 to the basis of the stock of P if there is a disposition or deconsolidation of the P stock in the same transaction. If there is a disposition or deconsolidation in the same transaction of less than all the stock of P, appropriate adjustments must be made under §1.1502–32 with respect to P (and any higher-tier members).

(2) *Example.* The principles of this paragraph (f) are illustrated by the following example.

Example. (i) P, the common parent of a group, owns all the stock of S, S owns all the stock of S1, and S1 owns all the stock of S2. P's basis in the S stock is $100, S's basis in the S1 stock is $100, and S1's basis in the S2 stock is $100. In Year 1, S2 buys all the stock of T for $100. T has an asset with a basis of $0 and a value of $100. In Year 2, T sells the asset for $100. Under the investment adjustment system, the basis of each subsidiary's stock increases from $100 to $200. In Year 6, S sells all the stock of S1 for $100 to A, an individual, and recognizes a loss of $100. S1, S2, and T are not members of a consolidated group immediately after the sale because the new S1 group does not file a consolidated return for its first tax year.

(ii) Under paragraph (a)(1) of this section, no deduction is allowed to S for its loss from the sale of the S1 stock. Under §1.1502–32(b)(3)(iii), S's disallowed loss is treated as a noncapital, nondeductible expense for Year 6 that reduces P's basis in the S stock. (Under §1.1502–33, S's earnings and profits for Year 6 are reduced by the amount of S's disallowed loss for earnings and profits purposes and, under §1.1502–33(b), this reduction is reflected in P's earnings and profits.)

(iii) Under paragraphs (b)(1) and (f)(1) of this section, because the stock of T and S2 are deconsolidated as a result of S's sale of the S1 stock, the basis of their stock must be reduced immediately before the sale from $200 to $100 (the value immediately before the deconsolidation). Under §1.1502–32(b)(3)(iii), the basis reductions are treated as noncapital, nondeductible expenses for Year 6. Under paragraph (f)(2) of this section, however, because the S2 stock is deconsolidated in the same transaction, the basis reduction to the T stock does not tier up under §1.1502–32(a)(3). Similarly, because the S1 stock is disposed of in the same transaction, the basis reduction to the S2 stock also does not tier up. (Comparable treatment applies for purposes of earnings and profits under §1.1502–33.)

(g) *Reattribution of subsidiary's losses to common parent*—(1) *Reattribution rule.* If a member disposes of stock of a subsidiary and the member's loss would be disallowed under paragraph (a)(1) of this section, the common parent may make an irrevocable election to reattribute to itself any portion of the net operating loss carryovers and net capital loss carryovers attributable to the subsidiary (and any lower tier subsidiary) without regard to the order in which they were incurred. The amount reattributed may not exceed the amount of loss that would be disallowed if no election is made under this paragraph (g). For this purpose, the amount of loss that would be disallowed is determined by applying paragraph (c)(1) of this section (without taking into account the requirement under paragraph (c)(3) of this section that a statement be filed) and by not taking the reattribution into account. The amount of loss that would be disallowed and the losses that may be reattributed are determined immediately after the disposition, but the reattribution is deemed to be made immediately before the disposition. The common parent succeeds to the reattributed losses as if the losses were succeeded to in a transaction described in section 381(a). Any owner shift of the subsidiary (including any deemed owner shift resulting from section 382(g)(4)(D) or 382(l)(3)) in connection

with the disposition is not taken into account under section 382 with respect to the reattributed losses. See § 1.1502–96(d) for rules relating to section 382 and the reattribution of losses under this paragraph (g).

(2) *Insolvency limitation.* If the subsidiary whose losses are to be reattributed, or any higher tier subsidiary, is insolvent within the meaning of section 108(d)(3) at the time of the disposition, losses of the subsidiary may be reattributed only to the extent they exceed the sum of the separate insolvencies of any subsidiaries (taking into account only the subsidiary and its higher tier subsidiaries) that are insolvent. For purposes of determining insolvency, liabilities owed to higher tier members are not taken into account, and stock of a subsidiary that is limited and preferred as to dividends and that is not owned by higher tier members is treated as a liability to the extent of the amount of preferred distributions to which the stock would be entitled if the subsidiary were liquidated on the date of the disposition.

(3) *Examples.* The principles of this paragraph (g) are illustrated by the following examples.

Example 1. Basic reattribution case. (i) P, the common parent of a group, forms S with a $100 contribution. For Year 1, S has a $60 operating loss that is not absorbed and is included in the group's consolidated net operating loss that is carried over under §§ 1.1502–21A or 1.1502–21. Under § 1.1502–32(b)(3)(i), P's basis in the S stock is not reduced to reflect S's loss because the loss is not absorbed. Under § 1.1502–33(b), S's deficit in earnings and profits is reflected in P's earnings and profits even though the loss is not absorbed for tax purposes. During Year 2, S's remaining assets appreciate in value and P sells the S stock for $55. But for an election to reattribute losses under paragraph (g) of this section, P would have a $45 loss from the sale that would be disallowed.

(ii) P elects under paragraph (g)(1) of this section to reattribute to itself $45 of S's losses (the maximum amount permitted). As a result, $45 of the $60 net operating loss carryover attributable to S is reattributed to P. This reattributed loss may be included in the net operating loss carryover to subsequent consolidated return years of the P group. P succeeds to these losses as if the losses were succeeded to in a transaction described in section 381(a) and they retain their character as ordinary losses. The remaining $15 of net operating loss carryover attributable to S is carried over to the first separate return year of S.

(iii) Under § 1.1502–32(b)(3)(iii), the reattribution of $45 of loss is a noncapital, nondeductible expense that reduces P's basis in the S stock from $100 to $55 immediately before the disposition. Consequently, P does not recognize any gain or loss from the disposition.

(iv) Assume that $20 of S's losses arose in Year 1 and $40 in Year 2, and that P elects to reattribute all $40 from Year 2 and $5 from Year 1. P succeeds to these losses as if the losses were succeeded to in a transaction described in section 381(a), and the losses retain their character as ordinary losses arising in Years 1 and 2. The losses continue to be subject to any limitations originally applicable to S, but P succeeds to them and may absorb the losses independently of S. (For example, P's use of the Year 2 losses does not depend on S's use of the Year 1 losses that were not reattributed to P.)

Example 2. Lower tier subsidiary. (i) P, the common parent of a group, forms S with a $100 contribution. S then forms T with a $40 contribution and T borrows $60. For Year 1, S has a $30 operating loss and T has a $55 operating loss. The losses are not absorbed and are included in the group's consolidated net operating loss that is carried over under §§ 1.1502–21A or 1.1502–21. Under § 1.1502–32(b)(3)(i), P's basis in the S stock, and S's basis in the T stock, are not reduced to reflect the S and T losses because the group is unable to absorb the losses. (Under § 1.1502–33(b), the deficits in earnings and profits of S and T are tiered up for earnings and profits purposes even though not absorbed for tax purposes.) During Year 2, P sells the S stock for $30 ($100 invested, minus S's $30 loss and $40 unrealized loss from its investment in the T stock). But for an election to reattribute losses under paragraph (g) of this section, P would have a $70 loss from the sale, which would be disallowed.

(ii) S's $30 portion of the net operating loss carryover may be reattributed to P under paragraph (g)(1) of this section. Because T is insolvent by $15, paragraph (g)(2) of this section provides that only $40 of its $55 portion of the net operating loss carryover may be reattributed to P under paragraph (g)(1) of this section. There is no limitation, however, on which $40 of T's $55 loss may be reattributed.

(iii) P elects under paragraph (g)(1) of this section to reattribute to itself $40 of T's losses (the maximum amount permitted). P does not elect, however, to reattribute to itself any of S's losses. As a result, $40 of the $85 net operating loss carryover is reattributed to P. This reattributed loss may be included in the net operating loss carryover to subsequent consolidated return years of the P group. Of the $45 remaining net operating loss carryover, the $15 attributable to T and

$30 attributable to S are carried over to their first separate return years.

(iv) Under §1.1502–32(b)(3)(iii), the reattribution of loss is a noncapital, nondeductible expense that reduces P's basis in the S stock to $60 immediately before the disposition. Consequently, P recognizes only a $30 loss from the disposition of its S stock ($30 sale proceeds and $60 basis), and this loss is disallowed.

Example 3. Separate return limitation year losses. (i) P, the common parent of a group, buys the stock of S for $100. S has a net operating loss carryover of $40 from a separate return limitation year, and assets with a value and basis of $100. The assets of S decline in value by $40, and P sells all the stock of S for $60. But for an election to reattribute losses under this paragraph (g), P would have a $40 loss on the sale of S that would be disallowed.

(ii) S's $40 loss carryover from a separate return limitation year may be reattributed to P under paragraph (g)(1) of this section.

(iii) P elects under paragraph (g)(1) of this section to reattribute to itself S's $40 (loss the maximum amount permitted). Following the reattribution, the loss is included in the net operating loss carryover to subsequent consolidated return years of the P group.

(iv) Under §1.1502–32(b)(3)(iii), the reattribution of loss is a noncapital, nondeductible expense that reduces P's basis in the S stock to $60 immediately before the disposition. Consequently, P recognizes no gain or loss from the disposition of its S stock. For P's treatment of the $40 reattributed loss, see §1.1502–1(f).

(4) *Time and manner of making the election*—(i) *In general.* The election described in paragraph (g)(1) of this section must be made in a separate statement entitled ''this is an election under §1.1502–20(g)(1) To reattribute losses of [insert names and employer identification numbers (E.I.N.) of each subsidiary whose losses are reattributed] to [insert name and employer identification number of common parent].'' The statement must include the following information—

(A) For each subsidiary, the amount of each net operating loss and net capital loss, and the year in which each arose, that is reattributed to the common parent;

(B) If a subsidiary ceases to be a member, the name and employer identification number of the person acquiring the subsidiary's stock; and

(C) If the common parent is reattributing to itself all or any part of a section 382 limitation pursuant to §1.1502–96(d)(5), the information required by paragraph (g)(4)(ii) of this section.

The statement must be signed by the common parent, and by each subsidiary with respect to which loss is reattributed under this paragraph (g) that does not remain a member of the common parent's group immediately following the disposition. The statement must be filed with the group's income tax return for the tax year of the disposition and a copy of the statement must be retained by the subsidiary. If the acquirer is a subsidiary in a consolidated group, the name and employer identification number of the common parent of the group must be included in the statement, and a copy of the statement must also be delivered to the common parent.

(ii) *Reattribution of section 382 limitation.* The information required by this paragraph (g)(4)(ii) is a separate list for each subsidiary (or a separate list for two or more subsidiaries that are members of a loss subgroup whose prechange subgroup losses are being reattributed) with respect to which an apportionment of a separate section 382 limitation or subgroup section 382 limitation is being made, setting forth—

(A) The name and E.I.N. of the subsidiary (or subsidiaries that were members of a loss subgroup);

(B) A statement entitled ''THIS IS AN ELECTION UNDER §1.1502–96(d)(5) TO APPORTION ALL OR PART OF [insert A SEPARATE or A SUBGROUP or BOTH A SEPARATE AND A SUBGROUP] SECTION 382 LIMITATION TO [insert name and E.I.N. of the common parent]'';

(C) The date of the ownership change giving rise to the separate section 382 limitation or subgroup section 382 limitation that is being apportioned;

(D) The amount of the separate (or subgroup) section 382 limitation for the taxable year in which the reattribution occurs (determined without reference to any apportionment under this section or §1.1502–95(c));

(E) The amount of each net operating loss carryover or capital loss carryover, and the year in which it arose, of the subsidiary (or subsidiaries) that is subject to the separate section 382 limitation or subgroup section 382 limitation that is being apportioned to the

common parent, and the amount of the value element and adjustment element of that limitation that is apportioned to the common parent.

(iii) *Filing of subsidiary's copy of statement.* The subsidiary whose losses are reattributed (or the common parent of any consolidated group that acquires the subsidiary or lower tier subsidiary) must attach its copy of the statement described in paragraph (g)(5)(i) of this section to its income return for the first tax year ending after the due date, including extensions, of the return in which the election required by paragraph (g)(5)(i) of this section is to be filed.

(h) *Effective dates*—(1) *General rule.* Except as otherwise provided in this paragraph (h), this section applies with respect to dispositions and deconsolidations on or after February 1, 1991. For this purpose, dispositions deferred under §1.1502–13 are deemed to occur at the time the deferred gain or loss is taken into account unless the stock was deconsolidated before February 1, 1991. If stock of a subsidiary became worthless during a taxable year including February 1, 1991, the disposition with respect to the stock is treated as occurring on the date the stock became worthless.

(2) *Election to accelerate effective date*—(i) *In general.* A group may make an irrevocable election to apply this section to all its members, instead of §1.337(d)–2, with respect to all dispositions and deconsolidations on or after November 19, 1990.

(ii) *Time and manner of making the election—in general.* The election described in paragraph (h)(2)(i) of this section must be made in a separate statement entitled ''this is an election under §1.1502–20(h)(2) to accelerate the application of §1.1502–20 to the consolidated group of which [insert name and employer identification number of common parent] is the common parent.'' The statement must be signed by the common parent and filed with the group's income tax return for the tax year of the first disposition or deconsolidation to which the election applies. If the separate statement required under this paragraph (h) (2) (ii) is to be filed with a return the due date (including extensions) of which is before April 16, 1991, the statement may be filed with an amended return for the year of the disposition or deconsolidation. Any other filings required under this §1.1502–20, such as the statement required under §1.1502–20(c)(3), which ordinarily cannot be made with an amended return, must be made at such time and in such manner as permitted by the Commissioner.

(3) *Binding contract rule.* For purposes of this paragraph (h), if a disposition or deconsolidation is pursuant to a binding written contract entered into before March 9, 1990, and in continuous effect until the disposition or deconsolidation, the date the contract became binding is treated as the date of the disposition or deconsolidation.

(4) *Application of §1.1502–20T to certain transactions*—(i) *In general.* If a group files the certification described in paragraph (h)(4)(ii) of this section, it may apply §1.1502–20T (as contained in the CFR edition revised as of April 1, 1990), to all of its members with respect to all dispositions and deconsolidations by the certifying group to which §1.1502–20T otherwise applied by its terms occurring—

(A) On or after March 9, 1990 (but only if not pursuant to a binding contract described in §1.337(d)–1T(e)(2) (as contained in the CFR edition revised as of April 1, 1990) that was entered into before March 9, 1990); and

(B) Before November 19, 1990 (or thereafter, if pursuant to a binding contract described in §1.1502–20T(g)(3) that was entered into on or after March 9, 1990 and before November 19, 1990).

The certification under this paragraph (h)(4)(i) with respect to the application of §1.1502–20T to any transaction described in this paragraph (h)(4)(i) may not be withdrawn and, if the certification is filed, §1.1502–20T must be applied to all such transactions on all returns (including amended returns) on which such transactions are included.

(ii) *Time and manner of filing certification.* The certification described in paragraph (h)(4)(i) of this section must be made in a separate statement entitled ''[insert name and employer identification number of common parent] hereby certifies under §1.1502–20 (h)(4)

that the group of which it is the common parent is applying § 1.1502–20T to all transactions to which that section otherwise applied by its terms.'' The statement must be signed by the common parent and filed with the group's income tax return for the taxable year of the first disposition or deconsolidation to which the certification applies. If the separate statement required under this paragraph (h)(4) is to be filed with a return the due date (including extensions) of which is before November 16, 1991, the statement may be filed with an amended return for the year of the disposition or deconsolidation that is filed within 180 days after September 13, 1991. Any other filings required under § 1.1502–20T, such as the statement required under § 1.1502–20T(f)(5), may be made with the amended return, regardless of whether § 1.1502–20T permits such filing by amended return.

(5) *Cross reference.* For transitional loss limitation rules, see §§ 1.337(d)–1 and 1.337(d)–2.

(i) *Limitations on the applicability of § 1.1502–20*—(1) *Dispositions and deconsolidations on or after March 7, 2002.* Except to the extent specifically incorporated in § 1.337(d)–2, paragraphs (a) and (b) of this section do not apply to a disposition or deconsolidation of stock of a subsidiary on or after March 7, 2002, unless the disposition or deconsolidation was effected pursuant to a binding written contract entered into before March 7, 2002, that was in continuous effect until the disposition or deconsolidation.

(2) *Dispositions and deconsolidations prior to March 7, 2002.* In the case of a disposition or deconsolidation of stock of a subsidiary by a member before March 7, 2002, or a disposition or deconsolidation on or after March 7, 2002, that was effected pursuant to a binding written contract entered into before March 7, 2002, that was in continuous effect until the disposition or deconsolidation, a consolidated group may determine the amount of the member's allowable loss or basis reduction by applying this section in its entirety, or, in lieu thereof, subject to the conditions set forth in this paragraph (i), by making an irrevocable election to apply the provisions of either—

(i) This section, except that in applying paragraph (c)(1) of this section, the amount of loss disallowed under paragraph (a)(1) of this section and the amount of basis reduction under paragraph (b)(1) of this section with respect to a share of stock will not exceed the sum of the amounts described in paragraphs (c)(1)(i) and (ii) of this section; or

(ii) Section 1.337(d)–2.

(3) *Operating rules*—(i) *Reattribution of losses in the case of an election to determine allowable loss by applying the provisions described in paragraph (i)(2)(i) of this section.* If a consolidated group elects to determine allowable loss by applying the provisions described in paragraph (i)(2)(i) of this section, an election described in paragraph (g) of this section to reattribute losses will be respected only if the requirements of paragraph (g) of this section, including the requirement that the election be filed with the group's income tax return for the year of the disposition, have been or are satisfied. For example, if a consolidated group did not file a valid election described in paragraph (g) of this section with its return for the year of the disposition, this section does not authorize the group that disposed of the stock to make such an election with its return for the year in which it elects to determine its allowable stock loss under the provisions described in paragraph (i)(2)(i) of this section. If a consolidated group that made a valid election described in paragraph (g) of this section with respect to the disposition of stock elects to determine allowable loss by applying the provisions described in paragraph (i)(2)(i) of this section, the election described in paragraph (g) of this section may not be revoked, and the amount of loss treated as reattributed as of the time of the disposition pursuant to the election described in paragraph (g) of this section is the amount of loss originally reattributed, reduced to the extent that it exceeds the greater of—

(A) The amount of stock loss disallowed after applying the provisions described in paragraph (i)(2)(i) of this section; and

(B) The amount of reattributed losses that the group that disposed of the stock absorbed in years for which the assessment of a deficiency is prevented by any law or rule of law as of the date the election to apply the provisions described in paragraph (i)(2)(i) of this section is filed and at all times thereafter.

(ii) *Reattribution of losses in the case of an election to determine allowable loss by applying the provisions described in paragraph (i)(2)(ii) of this section*. If a consolidated group elects to determine allowable loss by applying the provisions described in paragraph (i)(2)(ii) of this section, the consolidated group may not make an election described in paragraph (g) of this section to reattribute any losses. If the consolidated group made an election described in paragraph (g) of this section with respect to the disposition of subsidiary stock, the amount of loss treated as reattributed pursuant to such election will be the greater of—

(A) Zero; and

(B) The amount of reattributed losses that the group that disposed of the stock absorbed in years for which the assessment of a deficiency is prevented by any law or rule of law as of the date the election to apply the provisions described in paragraph (i)(2)(ii) of this section is filed and at all times thereafter.

(iii) *Apportionment of section 382 limitation in the case of a reduction of reattributed losses*—(A) *Losses subject to a separate section 382 limitation*. If, as a result of the application of paragraph (i)(3)(i) or (ii) and paragraph (i)(3)(vii) of this section, pre-change separate attributes that were subject to a separate section 382 limitation are treated as losses of a subsidiary and the common parent previously elected to apportion all or a part of such limitation to itself under § 1.1502–96(d), the common parent may reduce the amount of such limitation apportioned to itself.

(B) *Losses subject to a subgroup section 382 limitation*. If, as a result of the application of paragraph (i)(3)(i) or (ii) and paragraph (i)(3)(vii) of this section, pre-change subgroup attributes that were subject to a subgroup section 382 limitation are treated as losses of a subsidiary and the common parent previously elected to apportion all or a part of such limitation to itself under § 1.1502–96(d), the common parent may reduce the amount of such limitation apportioned to itself. In addition, if such subsidiary has ceased to be a member of the loss subgroup to which the pre-change subgroup attributes relate, the common parent may increase the total amount of such limitation apportioned to such subsidiary (or loss subgroup that includes such subsidiary) under § 1.1502–95(c) by an amount not in excess of the amount by which such limitation that is apportioned to the common parent is reduced pursuant to the previous sentence.

(C) *Losses subject to a consolidated section 382 limitation*. If, as a result of the application of paragraph (i)(3)(i) or (ii) and paragraph (i)(3)(vii) of this section, pre-change consolidated attributes (or pre-change subgroup attributes) that were subject to a consolidated section 382 limitation (or subgroup section 382 limitation where the common parent was a member of the loss subgroup) are treated as losses of a subsidiary, and the subsidiary has ceased to be a member of the loss group (or loss subgroup), the common parent may increase the amount of such limitation that is apportioned to such subsidiary (or loss subgroup that includes such subsidiary) under § 1.1502–95(c). The amount of each element of such limitation that can be apportioned to a subsidiary (or loss subgroup that includes such subsidiary) pursuant to this paragraph (i)(3)(iii)(C), however, cannot exceed the product of (x) the element and (y) a fraction the numerator of which is the amount of pre-change consolidated attributes (or subgroup attributes) subject to that limitation that are treated as losses of the subsidiary (or loss subgroup) as a result of the application of paragraph (i)(3)(i) or (ii) and paragraph (i)(3)(vii) of this section and the denominator of which is the total amount of pre-change attributes subject to that limitation determined as of the close of the taxable year in which the subsidiary ceases to be a member of the group (or loss subgroup).

(D) *Operating rules*—(*1*) *Limitations on apportionment*. In making any adjustment to an apportionment of a subgroup section 382 limitation or a consolidated section 382 limitation pursuant to paragraph (i)(3)(iii)(B) or (C) of this section, the common parent must take into account the extent, if any, to which such limitation has previously been apportioned to another subsidiary or loss subgroup prior to the date the election to apply the provisions described in paragraph (i)(2)(i) or (ii) of this section is filed.

(*2*) *Manner and effect of adjustment to previous apportionment of limitation to common parent*. Any reduction in a previous apportionment of a separate section 382 limitation or a subgroup section 382 limitation to the common parent made pursuant to paragraph (i)(3)(iii)(A) or (B) of this section is treated as effective when the previous apportionment was effective. Any such adjustment must be made in a manner consistent with the principles of §1.1502–95(c). For example, to the extent the apportionment of a separate section 382 limitation or a subgroup section 382 limitation to a common parent is reduced pursuant to paragraph (i)(3)(iii)(A) or (B) of this section, the amount of such limitation available to the subsidiary or loss subgroup, as applicable, is increased.

(3) *Manner and effect of adjustment to apportionment of limitation to departing subsidiary or loss subgroup*. Any increase in an amount of a subgroup section 382 limitation or a consolidated section 382 limitation apportioned to a departing subsidiary (or loss subgroup that includes such subsidiary) made pursuant to paragraph (i)(3)(iii)(B) or (C) of this section is treated as effective for taxable years ending after the date the subsidiary ceases to be a member of the group or loss subgroup. Any such adjustment may be made regardless of whether the common parent previously elected to apportion all or a part of such limitation to such subsidiary (or loss subgroup that includes such subsidiary) under §1.1502–95(c) or 1.1502–95A(c), but must be made in a manner consistent with the principles of §1.1502–95(c). For example, to the extent the apportionment of an element of a subgroup section 382 limitation or a consolidated section 382 limitation to a departing subsidiary is increased pursuant to paragraph (i)(3)(iii)(B) or (C) of this section, the amount of such element of such limitation that is available to the loss subgroup or loss group is reduced consistent with §1.1502–95(c)(3).

(*4*) *Prohibition against other adjustments*. This paragraph (i)(3)(iii) does not authorize the common parent to adjust the apportionment of any separate section 382 limitation, subgroup section 382 limitation, or consolidated section 382 limitation that it previously apportioned to a subsidiary, to a loss subgroup, or to itself under §1.1502–95(c), 1.1502–95A(c), or 1.1502–96(d), other than as provided in paragraphs (i)(3)(iii)(A), (B), and (C) of this section.

(E) *Time and manner of making apportionment adjustment*. An adjustment to the apportionment of any separate section 382 limitation, subgroup section 382 limitation, or consolidated section 382 limitation pursuant to paragraph (i)(3)(iii)(A), (B), or (C) of this section must be made as part of the group's election to apply the provisions of paragraph (i)(2)(i) or (ii) of this section, as described in paragraph (i)(4) of this section.

(iv) *Notification of reduction of reattributed losses and adjustment of apportionment of section 382 limitation*. If the application of paragraph (i)(3)(i) or (ii) of this section results in a reduction of the losses treated as reattributed pursuant to an election described in paragraph (g) of this section, then, prior to the date that the group files its income tax return for the taxable year that includes August 26, 2004, the common parent must send the notification required by this paragraph to the subsidiary, at the subsidiary's last known address. In addition, if the acquirer of the subsidiary stock was a member of a consolidated group at the time of the disposition, the common parent must send a copy of such notification to the person that was the common parent of the acquirer's group at the time of the acquisition, at its last known address. The notification is to be in the form of a statement entitled *Recomputation of Losses Reattributed Pursuant to the Election Described in §1.1502–20(g)*, that is

signed by the common parent and that includes the following information—

(A) The name and employer identification number (E.I.N.) of the subsidiary;

(B) The original and the recomputed amount of losses treated as reattributed pursuant to the election described in paragraph (g) of this section; and

(C) If the apportionment of a separate section 382 limitation, a subgroup section 382 limitation, or a consolidated section 382 limitation is adjusted pursuant to paragraph (i)(3)(iii)(A), (B), or (C) of this section, the original and the adjusted apportionment of such limitation.

(v) *Items taken into account in open years*—(A) *General rule.* An election under paragraph (i)(2) of this section affects a taxpayer's items of income, gain, deduction, or loss only to the extent that the election gives rise, directly or indirectly, to items or amounts that would properly be taken into account in a year for which an assessment of deficiency or a refund of overpayment, as the case may be, is not prevented by any law or rule of law. Under this paragraph, if the election increases the loss allowed with respect to a disposition of subsidiary stock, but the year of the disposition (or the year to which such loss would have been carried back or carried forward) is a year for which a refund of overpayment is prevented by law, to the extent that the absorption of such excess loss in such year would have affected the tax treatment of another item (*e.g.*, another loss that was absorbed in such year) that has an effect in a year for which a refund of overpayment is not prevented by any law or rule of law, the election will affect the treatment of such other item. Therefore, if the absorption of the excess loss in the year of the disposition (which is a year for which a refund of overpayment is prevented by law) would have prevented the absorption of another loss (the second loss) in such year and such loss would have been carried to and used in a year for which a refund of overpayment is not prevented by any law or rule of law (the other year), the election makes the second loss available for use in the other year.

(B) *Special rule.* If a member's basis in stock of a subsidiary was reduced pursuant to § 1.1502–32 because a loss with respect to stock of a lower-tier subsidiary was treated as disallowed under this section, then, to the extent such disallowed loss is allowed as a result of an election under paragraph (i) of this section but would have been properly absorbed or expired in a year for which a refund of overpayment is prevented by law or rule of law, the member's basis in the subsidiary stock may be increased for purposes of determining the group's or the shareholder-member's Federal income tax liability in all years for which a refund of overpayment is not prevented by law or rule of law.

(vi) *Conforming amendments for items previously taken into account in open years.* To the extent that, on any Federal income tax return, the common parent absorbed losses that were reattributed pursuant to an election described in paragraph (g) of this section and the amount of losses so absorbed is in excess of the amount of losses that are treated as reattributed after application of paragraph (i)(3)(i) or (ii) of this section, or that may be taken into account after any adjustment to an apportionment of a separate section 382 limitation, a subgroup section 382 limitation, or a consolidated section 382 limitation pursuant to paragraph (i)(3)(iii) of this section, such returns must be amended to the greatest extent possible to reflect the reduction in the amount of losses treated as reattributed and any adjustment to the apportionment of such limitation.

(vii) *Availability of losses to subsidiary.* To the extent that any losses of a subsidiary are reattributed to the common parent pursuant to an election described in paragraph (g) of this section, such reattribution is binding on the subsidiary and any group of which the subsidiary is or becomes a member. Therefore, if the subsidiary ceases to be a member of the group, any reattributed losses are not thereafter available to the subsidiary and may not be utilized by the subsidiary or any other group of which such subsidiary is or becomes a member. To the extent that the application of paragraph (i)(3)(i) or

(ii) of this section results in a reduction in the amount of losses treated as reattributed to the common parent pursuant to an election described in paragraph (g) of this section, however, losses in the amount of such reduction are available to the subsidiary and may be utilized by the subsidiary or any group of which such subsidiary is a member, subject to applicable limitations (*e.g.*, section 382).

(viii) *Apportionment of section 382 limitation in the case of an amendment of an election made pursuant to § 1.1502–32(b)(4)*—(A) *In general.* If, in connection with a disposition or deconsolidation of subsidiary stock, the subsidiary the stock of which was disposed of or deconsolidated became a member of another consolidated group (the acquiring group), and, pursuant to § 1.1502–32(b)(4)(vii), the acquiring group amends an election made pursuant to § 1.1502–32(b)(4) to treat all or a portion of the loss carryovers of such subsidiary (or a lower-tier corporation of such subsidiary) as expiring for all Federal income tax purposes, then the common parent may reapportion a separate, subgroup, or consolidated section 382 limitation with respect to such subsidiary or lower-tier corporation in a manner consistent with the principles of paragraphs (i)(3)(iii)(A) through (D) of this section. Any reapportionment of a section 382 limitation made pursuant to the previous sentence shall have the effects described in paragraphs (i)(3), (iii)(D)(*2*) and (*3*) of this section. For purposes of this section, a lower-tier corporation is a corporation that was a member of the group of which the subsidiary was a member immediately before becoming a member of the acquiring group and that became a member of the acquiring group as a result of the subsidiary becoming a member of the acquiring group.

(B) *Time and manner of adjustment of apportionment of section 382 limitation.* The common parent must include a statement entitled *Adjustment of Apportionment of Section 382 Limitation in Connection with Amendment of Election under § 1.1502–32(b)(4)* with or as part of any timely filed (including any extensions) original return for a taxable year that includes any date on or before August 26, 2004, or with or as part of an amended return filed before the date the original return for the taxable year that includes August 26, 2004, is due (with regard to extensions). The statement must set forth the name and E.I.N. of the subsidiary and both the original and the adjusted apportionment of a separate section 382 limitation, a subgroup section 382 limitation, and a consolidated section 382 limitation, as applicable. The requirements of this paragraph (i)(3)(viii)(B) will be treated as satisfied if the information required by this paragraph (i)(3)(viii)(B) is included in the statement required by paragraph (i)(4) of this section rather than in a separate statement.

(4) *Time and manner of making the election.* An election to determine allowable loss or basis reduction by applying the provisions described in paragraph (i)(2)(i) or (ii) of this section is made by including the statement required by this paragraph with or as part of any timely filed (including any extensions) original return for a taxable year that includes any date on or before August 26, 2004, or with or as part of an amended return filed before the date the original return for the taxable year that includes August 26, 2004, is due (including any extensions). Filing a statement in accordance with the provisions of this paragraph satisfies the requirement to file a ''statement of allowed loss'' otherwise imposed under paragraph (c)(3) of this section or § 1.337(d)–2(c)(3). The statement required by this paragraph satisfies the requirement that a statement be filed in order to claim allowable loss or basis reduction by applying the provisions described in paragraph (i)(2)(i) or (ii). The statement filed under this paragraph shall be entitled *Allowed Loss Under Section [Specify Section Under Which Allowed Loss Is Determined] Pursuant to Section 1.1502–20(i)* and must include the following information—

(i) The name and E.I.N. of the subsidiary and of the member(s) that disposed of the subsidiary stock;

(ii) In the case of an election to determine allowable loss or basis reduction by applying the provisions described in paragraph (i)(2)(i) of this section, a statement that the taxpayer

elects to determine allowable loss or basis reduction by applying such provisions;

(iii) In the case of an election to determine allowable loss or basis reduction by applying the provisions described in paragraph (i)(2)(ii) of this section, a statement that the taxpayer elects to determine allowable loss or basis reduction by applying such provisions;

(iv) If an election described in paragraph (g) of this section was made with respect to the disposition of the stock of the subsidiary, the amount of losses originally treated as reattributed pursuant to such election and the amount of losses treated as reattributed pursuant to paragraph (i)(3)(i) or (ii) of this section;

(v) If an apportionment of a separate section 382 limitation, a subgroup section 382 limitation, or a consolidated section 382 limitation is adjusted pursuant to paragraph (i)(3)(iii)(A), (B), or (C) of this section, the original and redetermined apportionment of such limitation; and

(vi) If the application of paragraph (i)(3)(i) or (ii) of this section results in a reduction of the amount of losses treated as reattributed pursuant to an election described in paragraph (g) of this section, a statement that the notification described in paragraph (i)(3)(iv) of this section was sent to the subsidiary and, if the acquirer was a member of a consolidated group at the time of the stock sale, to the person that was the common parent of such group at such time, as required by paragraph (i)(3)(iv) of this section.

(5) *Revocation or amendment of prior elections*—(i) *In general.* Notwithstanding anything to the contrary in this paragraph (i), if a consolidated group made an election under §1.1502–20T(i) to apply the provisions described in §1.1502–20T(i)(2)(i) or (ii), the consolidated group may revoke or amend that election as provided in this paragraph (i)(5).

(ii) *Time and manner of revoking or amending an election.* An election to apply the provisions described in §1.1502–20T(i)(2)(i) or (ii) is revoked or amended by including the statement required by paragraph (i)(5)(iii) of this section with or as part of any timely filed (including any extensions) original return for a taxable year that includes any date on or before August 26, 2004, or with or as part of an amended return filed before the date the original return for the taxable year that includes August 26, 2004, is due (including any extensions).

(iii) *Required statement*—(A) *Revocation.* To revoke an election to apply the provisions described in §1.1502–20T(i)(2)(i) or (ii), the consolidated group must file a statement entitled *Revocation of Election Under Section 1.1502–20T(i).* The statement must include the name and E.I.N. of the subsidiary and of the member(s) that disposed of the subsidiary stock.

(B) *Amendment.* To amend an election to apply the provisions described in §1.1502–20T(i)(2)(i) or (ii), the consolidated group must file a statement entitled *Amendment of Election Under Section 1.1502–20T(i).* The statement must include the following information—

(*1*) The name and E.I.N. of the subsidiary and of the member(s) that disposed of the subsidiary stock; and

(*2*) The provision the taxpayer elects to apply to determine allowable loss or basis reduction (described in paragraph (i)(2)(i) or (ii) of this section).

(iv) *Special rule.* If a consolidated group revokes an election made under §1.1502–20T(i), an election described in paragraph (g) of this section to reattribute losses will not be respected, even if such election was filed with the group's return for the year of the disposition.

(6) *Effective date.* This paragraph (i) is applicable on and after March 3, 2005.

(7) *Cross references.* See §1.1502–32(b)(4)(v) for a special rule for filing a waiver of loss carryovers.

[T.D. 8364, 56 FR 47392, Sept. 19, 1991; 57 FR 53550, Nov. 12, 1992, as amended by T.D. 8560, 59 FR 41680, Aug. 15, 1994; T.D. 8597, 60 FR 36709, July 18, 1995; T.D. 8677, 61 FR 33323, June 27, 1996; T.D. 8597, 62 FR 12098, Mar. 14, 1997; T.D. 8823, 64 FR 36099, July 2, 1999; T.D. 8824, 64 FR 36127, July 2, 1999; T.D. 8984, 67 FR 11037, Mar. 12, 2002; T.D. 9187, 70 FR 10322, Mar. 3, 2005; 70 FR 12539, Mar. 14, 2005; 70 FR 15227, Mar. 25, 2005]

§ 1.1502–20T Disposition or deconsolidation of subsidiary stock (temporary).

(a) through (h) [Reserved]. For further guidance, see § 1.1502–20(a) through (h).

[T.D. 8984, 67 FR 11037, Mar. 12, 2002, as amended by T.D. 8998, 67 FR 38000, May 31, 2002; T.D. 9057, 68 FR 24353, May 7, 2003; T.D. 9154, 69 FR 52421, Aug. 26, 2004; T.D. 9187, 70 FR 10325, Mar. 3, 2005]

COMPUTATION OF CONSOLIDATED ITEMS

§ 1.1502–21 Net operating losses.

(a) *Consolidated net operating loss deduction.* The consolidated net operating loss deduction (or CNOL deduction) for any consolidated return year is the aggregate of the net operating loss carryovers and carrybacks to the year. The net operating loss carryovers and carrybacks consist of—

(1) Any CNOLs (as defined in paragraph (e) of this section) of the consolidated group; and

(2) Any net operating losses of the members arising in separate return years.

(b) *Net operating loss carryovers and carrybacks to consolidated return and separate return years.* Net operating losses of members arising during a consolidated return year are taken into account in determining the group's CNOL under paragraph (e) of this section for that year. Losses taken into account in determining the CNOL may be carried to other taxable years (whether consolidated or separate) only under this paragraph (b).

(1) *Carryovers and carrybacks generally.* The net operating loss carryovers and carrybacks to a taxable year are determined under the principles of section 172 and this section. Thus, losses permitted to be absorbed in a consolidated return year generally are absorbed in the order of the taxable years in which they arose, and losses carried from taxable years ending on the same date, and which are available to offset consolidated taxable income for the year, generally are absorbed on a pro rata basis. In addition, the amount of any CNOL absorbed by the group in any year is apportioned among members based on the percentage of the CNOL attributable to each member as of the beginning of the year. The percentage of the CNOL attributable to a member is determined pursuant to paragraph (b)(2)(iv)(B) of this section. Additional rules provided under the Internal Revenue Code or regulations also apply. See, e.g., section 382(l)(2)(B) (if losses are carried from the same taxable year, losses subject to limitation under section 382 are absorbed before losses that are not subject to limitation under section 382). See paragraph (c)(1)(iii) of this section, *Example 2,* for an illustration of pro rata absorption of losses subject to a SRLY limitation. See § 1.1502–21(b)(3)(v) regarding the treatment of any loss that is treated as expired under § 1.1502–35(f).

(2) *Carryovers and carrybacks of CNOLs to separate return years*—(i) *In general.* If any CNOL that is attributable to a member may be carried to a separate return year of the member, the amount of the CNOL that is attributable to the member is apportioned to the member (apportioned loss) and carried to the separate return year. If carried back to a separate return year, the apportioned loss may not be carried back to an equivalent, or earlier, consolidated return year of the group; if carried over to a separate return year, the apportioned loss may not be carried over to an equivalent, or later, consolidated return year of the group.

(ii) *Special rules*—(A) *Year of departure from group.* If a corporation ceases to be a member during a consolidated return year, net operating loss carryovers attributable to the corporation are first carried to the consolidated return year, and then are subject to reduction under section 108 and § 1.1502–28 in respect of discharge of indebtedness income that is realized by a member of the group and that is excluded from gross income under section 108(a). Only the amount so attributable that is not absorbed by the group in that year or reduced under section 108 and § 1.1502–28 is carried to the corporation's first separate return year. For rules concerning a member departing a subgroup, see paragraph (c)(2)(vii) of this section.

(B) *Offspring rule.* In the case of a member that has been a member continuously since its organization (determined without regard to whether the

member is a successor to any other corporation), the CNOL attributable to the member is included in the carrybacks to consolidated return years before the member's existence. If the group did not file a consolidated return for a carryback year, the loss may be carried back to a separate return year of the common parent under paragraph (b)(2)(i) of this section, but only if the common parent was not a member of a different consolidated group or of an affiliated group filing separate returns for the year to which the loss is carried or any subsequent year in the carryback period. Following an acquisition described in § 1.1502–75(d)(2) or (3), references to the common parent are to the corporation that was the common parent immediately before the acquisition.

(iii) *Equivalent years.* Taxable years are equivalent if they bear the same numerical relationship to the consolidated return year in which a CNOL arises, counting forward or backward from the year of the loss. For example, in the case of a member's third taxable year (which was a separate return year) that preceded the consolidated return year in which the loss arose, the equivalent year is the third consolidated return year preceding the consolidated return year in which the loss arose. See paragraph (b)(3)(iii) of this section for certain short taxable years that are disregarded in making this determination.

(iv) *Operating rules*—(A) *Amount of CNOL attributable to a member.* The amount of a CNOL that is attributable to a member shall equal the product of the CNOL and the percentage of the CNOL attributable to such member.

(B) *Percentage of CNOL attributable to a member*—(*1*) *In general.* Except as provided in paragraph (b)(2)(iv)(B)(*2*) of this section, the percentage of the CNOL attributable to a member shall equal the separate net operating loss of the member for the year of the loss divided by the sum of the separate net operating losses for that year of all members having such losses. For this purpose, the separate net operating loss of a member is determined by computing the CNOL by reference to only the member's items of income, gain, deduction, and loss, including the member's losses and deductions actually absorbed by the group in the taxable year (whether or not absorbed by the member).

(*2*) *Special rules*—(*i*) *Carryback to a separate return year.* If a portion of the CNOL attributable to a member for a taxable year is carried back to a separate return year, the percentage of the CNOL attributable to each member as of immediately after such portion of the CNOL is carried back shall be recomputed pursuant to paragraph (b)(2)(iv)(B)(*2*)(*iv*) of this section.

(*ii*) *Excluded discharge of indebtedness income.* If during a taxable year a member realizes discharge of indebtedness income that is excluded from gross income under section 108(a) and such amount reduces any portion of the CNOL attributable to any member pursuant to section 108 and § 1.1502–28, the percentage of the CNOL attributable to each member as of immediately after the reduction of attributes pursuant to sections 108 and 1017 and § 1.1502–28 shall be recomputed pursuant to paragraph (b)(2)(iv)(B)(*2*)(*iv*) of this section.

(*iii*) *Departing member.* If during a taxable year a member that had a separate net operating loss for the year of the CNOL ceases to be a member, the percentage of the CNOL attributable to each member as of the first day of the following consolidated return year shall be recomputed pursuant to paragraph (b)(2)(iv)(B)(*2*)(*iv*) of this section.

(*iv*) *Recomputed percentage.* The recomputed percentage of the CNOL attributable to each member shall equal the unabsorbed CNOL attributable to the member at the time of the recomputation divided by the sum of the unabsorbed CNOL attributable to all of the members at the time of the recomputation. For purposes of the preceding sentence, a CNOL that is reduced pursuant to section 108 and § 1.1502–28 or that is otherwise permanently disallowed or eliminated shall be treated as absorbed.

(v) *Examples.* For purposes of the examples in this section, unless otherwise stated, all groups file consolidated returns, all corporations have calendar taxable years, the facts set forth the only corporate activity, value means fair market value and the adjusted basis of each asset equals its value, all

transactions are with unrelated persons, and the application of any limitation or threshold under section 382 is disregarded. The principles of this paragraph (b)(2) are illustrated by the following examples:

Example 1. Offspring rule. (i) During Year 1, Individual A forms P and T, and they each file a separate return. P forms S on March 15 of Year 2, and P and S file a consolidated return. P acquires all the stock of T from Individual A at the beginning of Year 3, and T becomes a member of the P group. P's acquisition of T is not an ownership change within the meaning of section 382. P, S, and T sustain a $1,100 CNOL in Year 3 and, under paragraph (b)(2)(iv) of this section, the loss is attributable $200 to P, $300 to S, and $600 to T.

(ii) Of the $1,100 CNOL in Year 3, the $500 amount of the CNOL that is attributable to P and S ($200 + $300) may be carried to P's separate return in Year 1. Even though S was not in existence in Year 1, the $300 amount of the CNOL attributable to S may be carried back to P's separate return in Year 1 because S (unlike T) has been a member of the P group since its organization and P is a qualified parent under paragraph (b)(2)(ii)(B) of this section. To the extent not absorbed in that year, the loss may then be carried to the P group's return in Year 2. The $600 amount of the CNOL attributable to T is a net operating loss carryback to T's separate return in Year 1, and if not absorbed in Year 1, then to Year 2.

Example 2. Departing members. (i) The facts are the same as in *Example 1.* In addition, on June 15 of Year 4, P sells all the stock of T. The P group's consolidated return for Year 4 includes the income of T through June 15. T files a separate return for the period from June 16 through December 31.

(ii) $600 of the Year 3 CNOL attributable to T is apportioned to T and is carried back to its separate return in Year 1. To the extent the $600 is not absorbed in T's separate return in Year 1 or Year 2, it is carried to the consolidated return in Year 4 before being carried to T's separate return in Year 4. Any portion of the loss not absorbed in T's Year 1 or Year 2 or in the P group's Year 4 is then carried to T's separate return in Year 4.

Example 3. Offspring rule following acquisition. (i) Individual A owns all of the stock of P, the common parent of a consolidated group. In Year 1, B, an individual unrelated to Individual A, forms T. P acquires all of the stock of T at the beginning of Year 3, and T becomes a member of the P group. The P group has $200 of consolidated taxable income in Year 2, and $300 of consolidated taxable income in Year 3 (computed without regard to the CNOL deduction). At the beginning of Year 4, T forms a subsidiary, Y, in a transaction described in section 351. The P group has a $300 consolidated net operating loss in Year 4, and under paragraph (b)(2)(iv) of this section, the loss is attributable entirely to Y.

(ii) Even though Y was not in existence in Year 2, $300, the amount of the consolidated net operating loss attributable to Y, may be carried back to the P group's Year 2 consolidated return under paragraph (b)(2)(ii)(B) of this section because Y has been a member of the P group since its organization. To the extent not absorbed in that year, the loss may then be carried to the P group's consolidated return in Year 3.

(3) *Special rules*—(i) [Reserved]. For further guidance, *see* §1.1502–21T(b)(3)(i).

(ii) *Special elections*—(A) *Groups that include insolvent financial institutions.* For rules applicable to relinquishing the entire carryback period with respect to losses attributable to insolvent financial institutions, see §301.6402–7 of this chapter.

(B) [Reserved]. For further guidance, *see* §1.1502–21T(b)(3)(ii)(B).

(C) [Reserved]. For further guidance, see §1.1502–21T(b)(3)(ii)(C).

(iii) *Short years in connection with transactions to which section 381(a) applies.* If a member distributes or transfers assets to a corporation that is a member immediately after the distribution or transfer in a transaction to which section 381(a) applies, the transaction does not cause the distributor or transferor to have a short year within the consolidated return year of the group in which the transaction occurred that is counted as a separate year for purposes of determining the years to which a net operating loss may be carried.

(iv) *Special status losses.* [Reserved]

(v) *Losses treated as expired under §1.1502–35(f)(1).* No loss treated as expired by §1.1502–35(f) may be carried over to any consolidated return year of the group.

(c) *Limitations on net operating loss carryovers and carrybacks from separate return limitation years*—(1) *SRLY limitation*—(i) *General rule.* Except as provided in paragraph (g) of this section (relating to an overlap with section 382), the aggregate of the net operating loss carryovers and carrybacks of a member arising (or treated as arising) in SRLYs that are included in the CNOL deductions for all consolidated

return years of the group under paragraph (a) of this section may not exceed the aggregate consolidated taxable income for all consolidated return years of the group determined by reference to only the member's items of income, gain, deduction, and loss. For this purpose—

(A) Consolidated taxable income is computed without regard to CNOL deductions;

(B) Consolidated taxable income takes into account the member's losses and deductions (including capital losses) actually absorbed by the group in consolidated return years (whether or not absorbed by the member);

(C) In computing consolidated taxable income, the consolidated return years of the group include only those years, including the year to which the loss is carried, that the member has been continuously included in the group's consolidated return, but exclude—

(*1*) For carryovers, any years ending after the year to which the loss is carried; and

(*2*) For carrybacks, any years ending after the year in which the loss arose; and

(D) The treatment under § 1.1502–15 of a built-in loss as a hypothetical net operating loss carryover in the year recognized is solely for purposes of determining the limitation under this paragraph (c) with respect to the loss in that year and not for any other purpose. Thus, for purposes of determining consolidated taxable income for any other losses, a built-in loss allowed under this section in the year it arises is taken into account.

(ii) *Losses treated as arising in SRLYs.* If a net operating loss carryover or carryback did not arise in a SRLY but is attributable to a built-in loss (as defined under § 1.1502–15), the carryover or carryback is treated for purposes of this paragraph (c) as arising in a SRLY if the built-in loss was not allowed, after application of the SRLY limitation, in the year it arose. For an illustration, see § 1.1502–15(d), *Example 5.* But see § 1.1502–15(g)(1).

(iii) *Examples.* The principles of this paragraph (c)(1) are illustrated by the following examples:

Example 1. Determination of SRLY limitation. (i) Individual A owns P. In Year 1, Individual A forms T, and T sustains a $100 net operating loss that is carried forward. P acquires all the stock of T at the beginning of Year 2, and T becomes a member of the P group. The P group has $300 of consolidated taxable income in Year 2 (computed without regard to the CNOL deduction). Such consolidated taxable income would be $70 if determined by reference to only T's items.

(ii) T's $100 net operating loss carryover from Year 1 arose in a SRLY. See § 1.1502–1(f)(2)(iii). P's acquisition of T was not an ownership change as defined by section 382(g). Thus, the $100 net operating loss carryover is subject to the SRLY limitation in paragraph (c)(1) of this section. The SRLY limitation for Year 2 is consolidated taxable income determined by reference to only T's items, or $70. Thus, $70 of the loss is included under paragraph (a) of this section in the P group's CNOL deduction for Year 2.

(iii) The facts are the same as in paragraph (i) of this *Example 1,* except that such consolidated taxable income (computed without regard to the CNOL deduction and by reference to only T's items) for Year 2 is a loss (a CNOL) of $370. Because the SRLY limitation may not exceed the consolidated taxable income determined by reference to only T's items, and such items aggregate to a CNOL, T's $100 net operating loss carryover from Year 1 is not allowed under the SRLY limitation in Year 2. Moreover, if consolidated taxable income (computed without regard to the CNOL deduction and by reference to only T's items) did not exceed $370 in Year 3, the carryover would still be restricted under paragraph (c) of this section in Year 3, because the aggregate consolidated taxable income for all consolidated return years of the group computed by reference to only T's items would not be a positive amount.

Example 2. Net operating loss carryovers. (i) In Year 1, Individual A forms P, and P sustains a $40 net operating loss that is carried forward. P has no income in Year 2. Individual A also owns T which sustains a net operating loss of $50 in Year 2 that is carried forward. P acquires the stock of T from Individual A during Year 3, but T is not a member of the P group for each day of the year. P and T file separate returns and sustain net operating losses of $120 and $60, respectively, for Year 3. The P group files consolidated returns beginning in Year 4. During Year 4, the P group has $160 of consolidated taxable income (computed without regard to the CNOL deduction). Such consolidated taxable income would be $70 if determined by reference to only T's items. These results are summarized as follows:

	Separate	Separate	Separate/affiliated	Consolidated
	Year 1	Year 2	Year 3	Year 4
P	$ (40)	$0	$ (120)	$90
T	0	(50)	(60)	70
CTI				160

(ii) P's Year 1, Year 2, and Year 3 are not SRLYs with respect to the P group. See § 1.1502–1(f)(2)(i). Thus, P's $40 net operating loss arising in Year 1 and $120 net operating loss arising in Year 3 are not subject to the SRLY limitation under paragraph (c) of this section. Under the principles of section 172, paragraph (b) of this section requires that the loss arising in Year 1 be the first loss absorbed by the P group in Year 4. Absorption of this loss leaves $120 of the group's consolidated taxable income available for offset by other loss carryovers.

(iii) T's Year 2 and Year 3 are SRLYs with respect to the P group. See § 1.1502–1(f)(2)(ii). P's acquisition of T was not an ownership change as defined by section 382(g). Thus, T's $50 net operating loss arising in Year 2 and $60 net operating loss arising in Year 3 are subject to the SRLY limitation. Under paragraph (c)(1) of this section, the SRLY limitation for Year 4 is $70, and under paragraph (b) of this section, T's $50 loss from Year 2 must be included under paragraph (a) of this section in the P group's CNOL deduction for Year 4. The absorption of this loss leaves $70 of the group's consolidated taxable income available for offset by other loss carryovers.

(iv) P and T each carry over net operating losses to Year 4 from a taxable year ending on the same date (Year 3). The losses carried over from Year 3 total $180. Under paragraph (b) of this section, the losses carried over from Year 3 are absorbed on a pro rata basis, even though one arises in a SRLY and the other does not. However, the group cannot absorb more than $20 of T's $60 net operating loss arising in Year 3 because its $70 SRLY limitation for Year 4 is reduced by T's $50 Year 2 SRLY loss already included in the CNOL deduction for Year 4. Thus, the absorption of Year 3 losses is as follows:

Amount of P's Year 3 losses absorbed = $120/($120 + $20) × $70 = $60.

Amount of T's Year 3 losses absorbed = $20/($120 + $20) × $70 = $10.

(v) The absorption of $10 of T's Year 3 loss further reduces T's SRLY limitation to $10 ($70 of initial SRLY limitation, reduced by the $60 net operating loss already included in the CNOL deductions for Year 4 under paragraph (a) of this section).

(vi) P carries its remaining $60 Year 3 net operating loss and T carries its remaining $50 Year 3 net operating loss over to Year 5. Assume that, in Year 5, the P group has $90 of consolidated taxable income (computed without regard to the CNOL deduction). The group's CTI determined by reference to only T's items is a CNOL of $4. For Year 5, the CNOL deduction is $66, which includes $60 of P's Year 3 loss and $6 of T's Year 3 loss (the aggregate consolidated taxable income for Years 4 and 5 determined by reference to T's items, or $66, reduced by T's SRLY losses actually absorbed by the group in Year 4, or $60).

Example 3. Net operating loss carrybacks. (i) P owns all of the stock of S and T. The members of the P group contribute the following to the consolidated taxable income of the P group for Years 1, 2, and 3:

	Year 1	Year 2	Year 3	Total
P	$100	$60	$80	$240
S	20	20	30	70
T	30	10	(50)	(10)
CTI	150	90	60	300

(ii) P sells all of the stock of T to Individual A at the beginning of Year 4. For its Year 4 separate return year, T has a net operating loss of $30.

(iii) T's Year 4 is a SRLY with respect to the P group. See § 1.1502–1(f)(1). T's $30 net operating loss carryback to the P group from Year 4 is not allowed under paragraph (c) of this section to be included in the CNOL deduction under paragraph (a) of this section for Year 1, 2, or 3, because the P group's consolidated taxable income would not be a positive amount if determined by reference to only T's items for all consolidated return years through Year 4 (without regard to the $30 net operating loss). The $30 loss is carried forward to T's Year 5 and succeeding taxable years as provided under the Internal Revenue Code.

Example 4. Computation of SRLY limitation for built-in losses treated as net operating loss carryovers. (i) Individual A owns P. In Year 1,

Individual A forms T by contributing $300 and T sustains a $100 net operating loss. During Year 2, T's assets decline in value by $100. At the beginning of Year 3, P acquires all the stock of T from Individual A, and T becomes a member of the P group in a transaction that does not result in an ownership change under section 382(g). At the time of the acquisition, T has a $100 net unrealized built-in loss, which exceeds the threshold requirements of section 382(h)(3)(B). During Year 3, T recognizes its unrealized loss as a $100 ordinary loss. The members of the P group contribute the following to the consolidated taxable income of the P group for Years 3 and 4 (computed without regard to T's recognition of its unrealized loss and any CNOL deduction under this section):

	Year 3	Year 4	Total
P group (without T)	$100	$100	$200
T	60	40	100
CTI	160	140	300

(ii) Under §1.1502–15(a), T's $100 of ordinary loss in Year 3 constitutes a built-in loss that is subject to the SRLY limitation under paragraph (c) of this section. The amount of the limitation is determined by treating the deduction as a net operating loss carryover from a SRLY. The built-in loss is therefore subject to a $60 SRLY limitation for Year 3. The built-in loss is treated as a net operating loss carryover solely for purposes of determining the extent to which the loss is not allowed by reason of the SRLY limitation, and for all other purposes the loss remains a loss arising in Year 3. Consequently, under paragraph (b) of this section, the $60 allowed under the SRLY limitation is absorbed by the P group before T's $100 net operating loss carryover from Year 1 is allowed.

(iii) Under §1.1502–15(a), the $40 balance of the built-in loss that is not allowed in Year 3 because of the SRLY limitation is treated as a $40 net operating loss arising in Year 3 that is subject to the SRLY limitation because, under paragraph (c)(1)(ii) of this section, Year 3 is treated as a SRLY, and is carried to other years in accordance with the rules of paragraph (b) of this section. The SRLY limitation for Year 4 is the P group's consolidated taxable income for Year 3 and Year 4 determined by reference to only T's items and without regard to the group's CNOL deductions ($60 + $40), reduced by T's loss actually absorbed by the group in Year 3 ($60). The SRLY limitation for Year 4 is $40.

(iv) Under paragraph (c) of this section and the principles of section 172(b), $40 of T's $100 net operating loss carryover from Year 1 is included in the CNOL deduction under paragraph (a) of this section in Year 4.

Example 5. Dual SRLY registers and accounting for SRLY losses actually absorbed. (i) In Year 1, T sustains a $100 net operating loss and a $50 net capital loss. At the beginning of Year 2, T becomes a member of the P group in a transaction that does not result in an ownership change under section 382(g). Both of T's carryovers from Year 1 are subject to SRLY limits under this paragraph (c) and §1.1502–22(c). The members of the P group contribute the following to the consolidated taxable income for Years 2 and 3 (computed without regard to T's CNOL deduction under this section or net capital loss carryover under §1.1502–22):

	P	T
Year 1 (SRLY)		
Ordinary	.....	(100)
Capital	.....	(50)
Year 2		
Ordinary	30	60
Capital	0	(20)
Year 3		
Ordinary	10	40
Capital	0	30

(ii) For Year 2, the group computes separate SRLY limits for each of T's SRLY carryovers from Year 1. The group determines its ability to use its capital loss carryover before it determines its ability to use its ordinary loss carryover. Under section 1212, because the group has no Year 2 capital gain, it cannot absorb any capital losses in Year 2. T's Year 1 net capital loss and the group's Year 2 consolidated net capital loss (all of which is attributable to T) are carried over to Year 3.

(iii) Under this section, the aggregate amount of T's $100 net operating loss carryover from Year 1 that may be included in the CNOL deduction of the group for Year 2 may not exceed $60—the amount of the consolidated taxable income computed by reference only to T's items, including losses and deductions to the extent actually absorbed (i.e., $60 of T's ordinary income for Year 2). Thus, the group may include $60 of T's ordinary loss carryover from Year 1 in its Year 2 CNOL deduction. T carries over its remaining $40 of its Year 1 loss to Year 3.

(iv) For Year 3, the group again computes separate SRLY limits for each of T's SRLY carryovers from Year 1. The group has consolidated net capital gain (without taking into account a net capital loss carryover deduction) of $30. Under §1.1502–22(c), the aggregate amount of T's $50 capital loss carryover from Year 1 that may be included in computing the group's consolidated net capital gain for all years of the group (here Years 2 and 3) may not exceed $30 (the aggregate consolidated net capital gain computed by reference only to T's items, including losses and deductions actually absorbed (i.e., $30 of capital gain in Year 3)). Thus, the group may include $30 of T's Year 1 capital

loss carryover in its computation of consolidated net capital gain for Year 3, which offsets the group's capital gains for Year 3. T carries over its remaining $20 of its Year 1 loss to Year 4. The group carries over the Year 2 consolidated net capital loss to Year 4.

(v) Under this section, the aggregate amount of T's net operating loss carryover from Year 1 that may be included in the CNOL deduction of the group for Years 2 and 3 may not exceed $100, which is the amount of the aggregate consolidated taxable income for Years 2 and 3 determined by reference only to T's items, including losses and deductions actually absorbed (i.e., $60 of ordinary income in Year 2 plus $40 of ordinary income, $30 of capital gain, and $30 of SRLY capital losses actually absorbed in Year 3). The group included $60 of T's ordinary loss carryover in its Year 2 CNOL deduction. It may include the remaining $40 of the carryover in its Year 3 CNOL deduction.

(2) *SRLY subgroup limitation.* In the case of a net operating loss carryover or carryback for which there is a SRLY subgroup, the principles of paragraph (c)(1) of this section apply to the SRLY subgroup, and not separately to its members. Thus, the contribution to consolidated taxable income and the net operating loss carryovers and carrybacks arising (or treated as arising) in SRLYs that are included in the CNOL deductions for all consolidated return years of the group under paragraph (a) of this section are based on the aggregate amounts of income, gain, deduction, and loss of the members of the SRLY subgroup for the relevant consolidated return years (as provided in paragraph (c)(1)(i)(C) of this section). For an illustration of aggregate amounts during the relevant consolidated return years following the year in which a member of a SRLY subgroup ceases to be a member of the group, see paragraph (c)(2)(viii) *Example 4* of this section. A SRLY subgroup may exist only for a carryover or carryback arising in a year that is not a SRLY (and is not treated as a SRLY under paragraph (c)(1)(ii) of this section) with respect to another group (the former group), whether or not the group is a consolidated group, or for a carryover that was subject to the overlap rule described in paragraph (g) of this section or § 1.1502–15(g) with respect to another group (the former group). A separate SRLY subgroup is determined for each such carryover or carryback. A consolidated group may include more than one SRLY subgroup, and a member may be a member of more than one SRLY subgroup. Solely for purposes of determining the members of a SRLY subgroup with respect to a loss:

(i) *Carryovers.* In the case of a carryover, the SRLY subgroup is composed of the member carrying over the loss (the loss member) and each other member that was a member of the former group that becomes a member of the group at the same time as the loss member. A member remains a member of the SRLY subgroup until it ceases to be affiliated with the loss member. The aggregate determination described in paragraph (c)(1) of this section and this paragraph (c)(2) includes the amounts of income, gain, deduction, and loss of each member of the SRLY subgroup for the consolidated return years during which it remains a member of the SRLY subgroup. For an illustration of the aggregate determination of a SRLY subgroup, see paragraph (c)(2)(viii) *Example 2* of this section.

(ii) *Carrybacks.* In the case of a carryback, the SRLY subgroup is composed of the member carrying back the loss (the loss member) and each other member of the group from which the loss is carried back that has been continuously affiliated with the loss member from the year to which the loss is carried through the year in which the loss arises.

(iii) *Built-in losses.* In the case of a built-in loss, the SRLY subgroup is composed of the member recognizing the loss (the loss member) and each other member that was part of the subgroup with respect to the loss determined under § 1.1502–15(c)(2) immediately before the members became members of the group. The principles of paragraphs (c)(2)(i) and (ii) of this section apply to determine the SRLY subgroup for the built-in loss that is, under paragraph (c)(1)(ii) of this section, treated as arising in a SRLY with respect to the group in which the loss is recognized. For this purpose and as the context requires, a reference in paragraphs (c)(2)(i) and (ii) of this section to a group or former group is a reference to the subgroup determined under § 1.1502–15(c)(2).

(iv) *Principal purpose of avoiding or increasing a SRLY limitation.* The members composing a SRLY subgroup are not treated as a SRLY subgroup if any of them is formed, acquired, or availed of with a principal purpose of avoiding the application of, or increasing any limitation under, this paragraph (c). Any member excluded from a SRLY subgroup, if excluded with a principal purpose of so avoiding or increasing any SRLY limitation, is treated as included in the SRLY subgroup.

(v) *Coordination with other limitations.* This paragraph (c)(2) does not allow a net operating loss to offset income to the extent inconsistent with other limitations or restrictions on the use of losses, such as a limitation based on the nature or activities of members. For example, any dual consolidated loss may not reduce the taxable income to an extent greater than that allowed under section 1503(d) and §1.1503–2. See also §1.1502–47(q) (relating to preemption of rules for life-nonlife groups).

(vi) *Anti-duplication.* If the same item of income or deduction could be taken into account more than once in determining a limitation under this paragraph (c), or in a manner inconsistent with any other provision of the Internal Revenue Code or regulations incorporating this paragraph (c), the item of income or deduction is taken into account only once and in such manner that losses are absorbed in accordance with the ordering rules in paragraph (b) of this section and the underlying purposes of this section.

(vii) *Corporations that leave a SRLY subgroup.* If a loss member ceases to be affiliated with a SRLY subgroup, the amount of the member's remaining SRLY loss from a specific year is determined pursuant to the principles of paragraphs (b)(2)(ii)(A) and (b)(2)(iv) of this section.

(viii) *Examples.* The principles of this paragraph (c)(2) are illustrated by the following examples:

Example 1. Members of SRLY subgroups. (i) Individual A owns all of the stock of P, S, T and M. P and M are each the common parent of a consolidated group. During Year 1, P sustains a $50 net operating loss. At the beginning of Year 2, P acquires all the stock of S at a time when the aggregate basis of S's assets exceeds their aggregate value by $70, and S becomes a member of the P group. At the beginning of Year 3, P acquires all the stock of T, T has a $60 net operating loss carryover at the time of the acquisition, and T becomes a member of the P group. During Year 4, S forms S1 and T forms T1, each by contributing assets with built-in gains which are, in the aggregate, material. S1 and T1 become members of the P group. During Year 7, M acquires all of the stock of P, and the members of the P group become members of the M group for the balance of Year 7. The $50 and $60 loss carryovers of P and T are carried to Year 7 of the M group, and the value and basis of S's assets did not change after it became a member of the former P group. None of the transactions described above resulted in an ownership change under section 382(g).

(ii) Under paragraph (c)(2) of this section, a separate SRLY subgroup is determined for each loss carryover and built-in loss. In the P group, P's $50 loss carryover is not treated as arising in a SRLY. See §1.1502–1(f). Consequently, the carryover is not subject to limitation under paragraph (c) of this section in the P group.

(iii) In the M group, P's $50 loss carryover is treated as arising in a SRLY and is subject to the limitation under paragraph (c) of this section. A SRLY subgroup with respect to that loss is composed of members which were members of the P group, the group as to which the loss was not a SRLY. The SRLY subgroup is composed of P, the member carrying over the loss, and each other member of the P group that became a member of the M group at the same time as P. A member of the SRLY subgroup remains a member until it ceases to be affiliated with P. For Year 7, the SRLY subgroup is composed of P, S, T, S1, and T1.

(iv) In the P group, S's $70 unrealized loss, if recognized within the 5-year recognition period after S becomes a member of the P group, is subject to limitation under paragraph (c) of this section. See §1.1502–15 and paragraph (c)(1)(ii) of this section. Because S was not continuously affiliated with P, T, or T1 for 60 consecutive months prior to joining the P group, these corporations cannot be included in a SRLY subgroup with respect to S's unrealized loss in the P group. See paragraph (c)(2)(iii) of this section. As a successor to S, S1 is included in a subgroup with S in the P group, and, because 100 percent of S1's stock is owned directly by corporations that were members of the SRLY subgroup when the members of the SRLY subgroup became members of the P group, its net positive income is not excluded from the consolidated taxable income of the P group that may be offset by the built-in loss. See paragraph (f) of this section.

(v) In the M group, S's $70 unrealized loss, if recognized within the 5-year recognition period after S becomes a member of the M

group, is subject to limitation under paragraph (c) of this section. Prior to becoming a member of the M group, S had been continuously affiliated with P (but not T or T1) for 60 consecutive months, and S1 is a successor that has remained continuously affiliated with S. Those members had a net unrealized built-in loss immediately before they became members of the group under §1.1502–15(c). Consequently, in Year 7, S, S1, and P compose a subgroup in the M group with respect to S's unrealized loss. Because S1 was a member of the SRLY subgroup when it became a member of the M group and also because 100 percent of S1's stock is owned directly by corporations that were members of the SRLY subgroup when the members of the SRLY subgroup became members of the M group, its net positive income is not excluded from the consolidated taxable income of the M group that may be offset by the recognized built-in loss. See paragraph (f) of this section.

(vi) In the P group, T's $60 loss carryover arose in a SRLY and is subject to limitation under paragraph (c) of this section. P, S, and S1 were not members of the group in which T's loss arose, and T's loss carryover was not subject to the overlap rule described in paragraph (g) of this section with respect to the P group (the former group). Thus, P, S, and S1 are not members of a SRLY subgroup with respect to the T carryover in the P group. See paragraph (c)(2)(i) of this section. As a successor to T, T1 is included in a SRLY subgroup with T in the P group, and, because 100 percent of T1's stock is owned directly by corporations that were members of the SRLY subgroup when the members of the SRLY subgroup became members of the P group, its net positive income is not excluded from the consolidated taxable income of the P group that may be offset by the carryover. See paragraph (f) of this section.

(vii) In the M group, T's $60 loss carryover arose in a SRLY and is subject to limitation under paragraph (c) of this section. T and T1 remain the only members of a SRLY subgroup with respect to the carryover. Because T1 was a member of the SRLY subgroup when it became a member of the M group and also because 100 percent of T1's stock is owned directly by corporations that were members of the SRLY subgroup when the members of the SRLY subgroup became members of the M group, its net positive income is not excluded from the consolidated taxable income of the M group that may be offset by the carryover. See paragraph (f) of this section.

Example 2. Computation of SRLY subgroup limitation. (i) Individual A owns all of the stock of S, T, P and M. P and M are each the common parent of a consolidated group. In Year 2, P acquires all the stock of S and T from Individual A, and S and T become members of the P group. For Year 3, the P group has a $45 CNOL, which is attributable to P, and which P carries forward. M is the common parent of another group. At the beginning of Year 4, M acquires all of the stock of P, and the former members of the P group become members of the M group. None of the transactions described above resulted in an ownership change under section 382(g).

(ii) P's year to which the loss is attributable, Year 3, is a SRLY with respect to the M group. See §1.1502–1(f)(1). However, P, S, and T compose a SRLY subgroup with respect to the Year 3 loss under paragraph (c)(2)(i) of this section because Year 3 is not a SRLY (and is not treated as a SRLY) with respect to the P group. P's loss is carried over to the M group's Year 4 and is therefore subject to the SRLY subgroup limitation in paragraph (c)(2) of this section.

(iii) In Year 4, the M group has $10 of consolidated taxable income (computed without regard to the CNOL deduction for Year 4). Such consolidated taxable income would be $45 if determined by reference to only the items of P, S, and T, the members included in the SRLY subgroup with respect to P's loss carryover. Therefore, the SRLY subgroup limitation under paragraph (c)(2) of this section for P's net operating loss carryover from Year 3 is $45. Because the M group has only $10 of consolidated taxable income in Year 4, however, only $10 of P's net operating loss carryover is included in the CNOL deduction under paragraph (a) of this section in Year 4.

(iv) In Year 5, the M group has $100 of consolidated taxable income (computed without regard to the CNOL deduction for Year 5). Neither P, S, nor T has any items of income, gain, deduction, or loss in Year 5. Although the members of the SRLY subgroup do not contribute to the $100 of consolidated taxable income in Year 5, the SRLY subgroup limitation for Year 5 is $35 (the sum of SRLY subgroup consolidated taxable income of $45 in Year 4 and $0 in Year 5, less the $10 net operating loss carryover actually absorbed by the M group in Year 4). Therefore, $35 of P's net operating loss carryover is included in the CNOL deduction under paragraph (a) of this section in Year 5.

Example 3. Inclusion in more than one SRLY subgroup. (i) Individual A owns all of the stock of S, T, P and M. S, P, and M are each the common parent of a consolidated group. At the beginning of Year 1, S acquires all the stock of T from Individual A, and T becomes a member of the S group. For Year 1, the S group has a CNOL of $10, all of which is attributable to S and is carried over to Year 2. At the beginning of Year 2, P acquires all the stock of S, and S and T become members of the P group. For Year 2, the P group has a CNOL of $35, all of which is attributable to P and is carried over to Year 3. At the beginning of Year 3, M acquires all of the stock of P, and the former members of the P group

become members of the M group. None of the transactions described above resulted in an ownership change under section 382(g).

(ii) P's and S's net operating losses arising in SRLYs with respect to the M group are subject to limitation under paragraph (c) of this section. P, S, and T compose a SRLY subgroup for purposes of determining the limitation for P's $35 net operating loss carryover arising in Year 2 because, under paragraph (c)(2)(i) of this section, Year 2 is not a SRLY with respect to the P group. Similarly, S and T compose a SRLY subgroup for purposes of determining the limitation for S's $10 net operating loss carryover arising in Year 1 because Year 1 is not a SRLY with respect to the S group.

(iii) S and T are members of both the SRLY subgroup with respect to P's losses and the SRLY subgroup with respect to S's losses. Under paragraph (c)(2) of this section, S's and T's items cannot be included in the determination of the SRLY subgroup limitation for both SRLY subgroups for the same consolidated return year; paragraph (c)(2)(vi) of this section requires the M group to consider the items of S and T only once so that the losses are absorbed in the order of the taxable years in which they were sustained. Because S's loss was incurred in Year 1, while P's loss was incurred in Year 2, the items will be added in the determination of the consolidated taxable income of the S and T SRLY subgroup to enable S's loss to be absorbed first. The taxable income of the P, S, and T SRLY subgroup is then computed by including the consolidated taxable income for the S and T SRLY subgroup less the amount of any net operating loss carryover of S that is absorbed after applying this section to the S subgroup for the year.

Example 4. Corporation ceases to be affiliated with a SRLY subgroup. (i) Individual A owns all of the stock of P, and M. P and S are members of the P group and the P group has a CNOL of $30 in Year 1, all of which is attributable to P and carried over to Year 2. At the beginning of Year 2, M acquires all of the stock of P, and P and S become members of the M group. P and S compose a SRLY subgroup with respect to P's net operating loss carryover. For Year 2, consolidated taxable income of the M group determined by reference to only the items of P (and without regard to the CNOL deduction for Year 2) is $40. However, such consolidated taxable income of the M group determined by reference to the items of both P and S is a loss of $20. Thus, the SRLY subgroup limitation under paragraph (c)(2) of this section prevents the M group from including any of P's net operating loss carryover in the CNOL deduction under paragraph (a) of this section in Year 2, and P carries the Year 1 loss to Year 3.

(ii) At the end of Year 2, P sells all of the S stock, and S ceases to be a member of the M group and the P subgroup. For Year 3, consolidated taxable income of the M group is $50 (determined without regard to the CNOL deduction for Year 3), and such consolidated taxable income would be $10 if determined by reference to only items of P. However, the limitation under paragraph (c) of this section for Year 3 for P's net operating loss carryover still prevents the M group from including any of P's loss in the CNOL deduction under paragraph (a) of this section. The limitation results from the inclusion of S's items for Year 2 in the determination of the SRLY subgroup limitation for Year 3 even though S ceased to be a member of the M group (and the P subgroup) at the end of Year 2. Thus, the M group's consolidated taxable income determined by reference to only the SRLY subgroup members' items for all consolidated return years of the group through Year 3 (determined without regard to the CNOL deduction) is not a positive amount.

(ix) *Application to other than loss carryovers.* Paragraph (g) of this section and the phrase ''or for a carryover that was subject to the overlap rule described in paragraph (g) of this section or § 1.1502–15(g) with respect to another group (the former group)'' in this paragraph (c)(2) apply only to carryovers of net operating losses, net capital losses, and for taxable years for which the due date (without extensions) of the consolidated return is after May 25, 2000, to carryovers of credits described in section 383(a)(2). Accordingly, as the context may require, if another regulation references this section and such other regulation does not concern a carryover of net operating losses, net capital losses, or for taxable years for which the due date (without extensions) of the consolidated return is after May 25, 2000, carryovers of credits described in section 383(a)(2), then such reference does not include a reference to such paragraph or phrase.

(d) *Coordination with consolidated return change of ownership limitation and transactions subject to old section 382*—(1) *Consolidated return changes of ownership.* If a consolidated return change of ownership occurred before January 1, 1997, the principles of § 1.1502–21A(d) apply to determine the amount of the aggregate of the net operating losses attributable to old members of the group that may be included in the consolidated net operating loss deduction under paragraph (a) of this section. For this purpose, § 1.1502–1(g) is applied by

treating that date as the end of the year of change.

(2) *Old section 382.* The principles of § 1.1502–21A(e) apply to disallow or reduce the amount of a net operating loss carryover of a member as a result of a transaction subject to old section 382.

(e) *Consolidated net operating loss.* Any excess of deductions over gross income, as determined under § 1.1502–11(a) (without regard to any consolidated net operating loss deduction), is also referred to as the consolidated net operating loss (or CNOL).

(f) *Predecessors and successors*—(1) *In general.* For purposes of this section, any reference to a corporation, member, common parent, or subsidiary, includes, as the context may require, a reference to a successor or predecessor, as defined in § 1.1502–1(f)(4).

(2) *Limitation on SRLY subgroups*—(i) *General rule.* Except as provided in paragraph (f)(2)(ii) of this section, if a successor's items of income and gain exceed the successor's items of deduction and loss (net positive income), then the net positive income attributable to the successor is excluded from the computation of the consolidated taxable income of a SRLY subgroup.

(ii) *Exceptions.* A successor's net positive income is not excluded from the consolidated taxable income of a SRLY subgroup if—

(A) The successor acquires substantially all the assets and liabilities of its predecessor, and the predecessor ceases to exist;

(B) The successor was a member of the SRLY subgroup when the SRLY subgroup members became members of the group;

(C) 100 percent of the stock of the successor is owned directly by corporations that were members of the SRLY subgroup when the SRLY subgroup members became members of the group; or

(D) The Commissioner so determines.

(g) *Overlap with section 382*—(1) *General rule.* The limitation provided in paragraph (c) of this section does not apply to net operating loss carryovers (other than a hypothetical carryover described in paragraph (c)(1)(i)(D) of this section and a carryover described in paragraph (c)(1)(ii) of this section) when the application of paragraph (c) of this section results in an overlap with the application of section 382. For a similar rule applying in the case of net operating loss carryovers described in paragraphs (c)(1)(i)(D) and (c)(1)(ii) of this section, see § 1.1502–15(g).

(2) *Definitions*—(i) *Generally.* For purposes of this paragraph (g), the definitions and nomenclature contained in section 382, the regulations thereunder, and §§ 1.1502–90 through 1.1502–99 apply.

(ii) *Overlap.* (A) An overlap of the application of paragraph (c) of this section and the application of section 382 with respect to a net operating loss carryover occurs if a corporation becomes a member of a consolidated group (the SRLY event) within six months of the change date of an ownership change giving rise to a section 382(a) limitation with respect to that carryover (the section 382 event).

(B) If an overlap described in paragraph (g)(2)(ii)(A) of this section occurs with respect to net operating loss carryovers of a corporation whose SRLY event occurs within the six month period beginning on the date of a section 382 event, then an overlap is treated as also occurring with respect to that corporation's net operating loss carryover that arises within the period beginning with the section 382 event and ending with the SRLY event.

(C) For special rules in the event that there is a SRLY subgroup and/or a loss subgroup as defined in § 1.1502–91(d)(1) with respect to a carryover, see paragraph (g)(4) of this section.

(3) *Operating rules*—(i) *Section 382 event before SRLY event.* If a SRLY event occurs on the same date as a section 382 event or within the six month period beginning on the date of the section 382 event, paragraph (g)(1) of this section applies beginning with the tax year that includes the SRLY event.

(ii) *SRLY event before section 382 event.* If a section 382 event occurs within the period beginning the day after the SRLY event and ending six months after the SRLY event, paragraph (g)(1) of this section applies starting with the first tax year that begins after the section 382 event.

(4) *Subgroup rules.* In general, in the case of a net operating loss carryover for which there is a SRLY subgroup

and a loss subgroup (as defined in § 1.1502–91(d)(1)), the principles of this paragraph (g) apply to the SRLY subgroup, and not separately to its members. However, paragraph (g)(1) of this section applies—

(i) With respect to a carryover described in paragraph (g)(2)(ii)(A) of this section only if—

(A) All members of the SRLY subgroup with respect to that carryover are also included in a loss subgroup with respect to that carryover; and

(B) All members of a loss subgroup with respect to that carryover are also members of a SRLY subgroup with respect to that carryover; and

(ii) With respect to a carryover described in paragraph (g)(2)(ii)(B) of this section only if all members of the SRLY subgroup for that carryover are also members of a SRLY subgroup that has net operating loss carryovers described in paragraph (g)(2)(ii)(A) of this section that are subject to the overlap rule of paragraph (g)(1) of this section.

(5) *Examples.* The principles of this paragraph (g) are illustrated by the following examples:

Example 1. Overlap—Simultaneous Acquisition. (i) Individual A owns all of the stock of P, which in turn owns all of the stock of S. P and S file a consolidated return. In Year 2, B, an individual unrelated to Individual A, forms T which incurs a $100 net operating loss for that year. At the beginning of Year 3, S acquires T.

(ii) S's acquisition of T results in T becoming a member of the P group (the SRLY event) and also results in an ownership change of T, within the meaning of section 382(g), that gives rise to a limitation under section 382(a) (the section 382 event) with respect to the T carryover.

(iii) Because the SRLY event and the change date of the section 382 event occur on the same date, there is an overlap of the application of the SRLY rules and the application of section 382.

(iv) Consequently, under this paragraph (g), in Year 3 the SRLY limitation does not apply to the Year 2 $100 net operating loss.

Example 2. Overlap—Section 382 event before SRLY event. (i) Individual A owns all of the stock of P, which in turn owns all of the stock of S. P and S file a consolidated return. In Year 1, B, an individual unrelated to Individual A, forms T which incurs a $100 net operating loss for that year. On February 28 of Year 2, S purchases 55% of T from Individual B. On June 30, of Year 2, S purchases an additional 35% of T from Individual B.

(ii) The February 28 purchase of 55% of T is a section 382 event because it results in an ownership change of T, under section 382(g), that gives rise to a section 382(a) limitation with respect to the T carryover. The June 30 purchase of 35% of T results in T becoming a member of the P group and is therefore a SRLY event.

(iii) Because the SRLY event occurred within six months of the change date of the section 382 event, there is an overlap of the application of the SRLY rules and the application of section 382.

(iv) Consequently, under paragraph (g) of this section, in Year 2 the SRLY limitation does not apply to the Year 1 $100 net operating loss.

Example 3. No overlap—Section 382 event before SRLY event. (i) The facts are the same as in *Example 2* except that Individual B does not sell the additional 35% of T to S until September 30, Year 2.

(ii) The February 28 purchase of 55% of T is a section 382 event because it results in an ownership change of T, under section 382(g), that gives rise to a section 382(a) limitation with respect to the T carryover. The September 30 purchase of 35% of T results in T becoming a member of the P group and is therefore a SRLY event.

(iii) Because the SRLY event did not occur within six months of the change date of the section 382 event, there is no overlap of the application of the SRLY rules and the application of section 382. Consequently, the Year 1 net operating loss is subject to a SRLY limitation and a section 382 limitation.

Example 4. Overlap—SRLY event before section 382 event. (i) P and S file a consolidated return. S has owned 40% of T for 6 years. For Year 6, T has a net operating loss of $500 that is carried forward. On March 31, Year 7, S acquires an additional 40% of T, and on August 31, Year 7, S acquires the remaining 20% of T.

(ii) The March 31 purchase of 40% of T results in T becoming a member of the P group and is therefore a SRLY event. The August 31 purchase of 20% of T is a section 382 event because it results in an ownership change of T, under section 382(g), that gives rise to a section 382(a) limitation with respect to the T carryover.

(iii) Because the SRLY event occurred within six months of the change date of the section 382 event, there is an overlap of the application of the SRLY rules and the application of section 382 within the meaning of this paragraph (g).

(iv) Under this paragraph (g), the SRLY rules of paragraph (c) of this section will apply to the Year 7 tax year. Beginning in Year 8 (the year after the section 382 event), any unabsorbed portion of the Year 6 net operating loss will not be subject to a SRLY limitation.

Example 5. Overlap—Coextensive subgroups. (i) Individual A owns all of the stock of S, which in turn owns all of the stock of T. S and T file a consolidated return beginning in Year 1. B, an individual unrelated to Individual A, owns all of the stock of P, the common parent of a consolidated group. In Year 2, the S group has a $200 consolidated net operating loss which is carried forward, of which $100 is attributable to S, and $100 is attributable to T. At the beginning of Year 3, the P group acquires all of the stock of S from Individual A.

(ii) P's acquisition of S results in S and T becoming members of the P group (the SRLY event). With respect to the Year 2 net operating loss carryover, S and T compose a SRLY subgroup under paragraph (c)(2) of this section.

(iii) S and T also compose a loss subgroup under §1.1502–91(d)(1) with respect to the Year 2 net operating loss carryover. P's acquisition also results in an ownership change of S, the subgroup parent, within the meaning of section 382(g), that gives rise to a limitation under section 382(a) (the section 382 event) with respect to the Year 2 carryover.

(iv) Because the SRLY event and the change date of the section 382 event occur on the same date, there is an overlap of the application of the SRLY rules and the application of section 382 within the meaning of paragraph (g) of this section. Because the SRLY subgroup and the loss subgroup are coextensive, under paragraph (g) of this section, the SRLY limitation does not apply to the Year 2 $200 net operating loss.

Example 6. No overlap—Different subgroups. (i) Individual B owns all of the stock of P, the common parent of a consolidated group. P owns all of the stock of S and all of the stock of T. Individual A owns all of the stock of X, the common parent of another consolidated group. In Year 1, the P group has a $200 consolidated net operating loss, of which $100 is attributable to S and $100 is attributable to T. At the beginning of Year 3, the X group acquires all of the stock of S and T from P and does not make an election under §1.1502–91(d)(4) (concerning an election to treat the loss subgroup parent requirement as having been satisfied).

(ii) X's acquisition of S and T results in S and T becoming members of the X group (the SRLY event). With respect to the Year 1 net operating loss, S and T compose a SRLY subgroup under paragraph (c)(2) of this section.

(iii) S and T do not bear (and are not treated as bearing) a section 1504(a)(1) relationship. Therefore S and T do not qualify as a loss subgroup under §1.1502–91(d)(1). X's acquisition of S and T results in separate ownership changes of S and T, that give rise to separate limitations under section 382(a) (the section 382 events) with respect to each of S and T's Year 1 net operating loss carryovers. See §1.1502–94.

(iv) The SRLY event and the change dates of the section 382 events occur on the same date. However, paragraph (g)(1) of this section does not apply because the SRLY subgroup (composed of S and T) is not coextensive with a loss subgroup with respect to the Year 1 carryovers. Consequently, the Year 1 net operating loss is subject to both a SRLY subgroup limitation and also separate section 382 limitations for each of S and T.

Example 7. No overlap—Different subgroups. (i) Individual A owns all of the stock of T and all of the stock of S, the common parent of a consolidated group. B, an individual unrelated to Individual A, owns all of the stock of P, the common parent of another consolidated group. In Year 1, T has a net operating loss of $100 that is carried forward. At the end of Year 2, S acquires all of the stock of T from Individual A. In Year 3, the S group sustains a $200 consolidated net operating loss that is carried forward. In Year 8, the P group acquires all of the stock of S from Individual A.

(ii) S's acquisition of T in Year 1 results in T becoming a member of the S group. The acquisition, however, did not result in an ownership change under section 382(g). As a result, T's Year 1 net operating loss is subject to SRLY within the S group. At the end of Year 7, §1.1502–96(a) treats T's Year 1 net operating loss as not having arisen in a SRLY with respect to the S group. Section 1.1502–96(a), however, applies only for purposes of §§1.1502–91 through 1.1502–96 and §1.1502–98 but not for purposes of this section. See §1.1502–96(a)(5).

(iii) P's acquisition of S in Year 8 results in S and T becoming members of the P group (the SRLY event). With respect to the Year 1 net operating loss, S and T do not compose a SRLY subgroup under paragraph (c)(2) of this section.

(iv) S and T compose a loss subgroup under §1.1502–91(d)(1) with respect to the Year 1 net operating loss carryover. P's acquisition of S results in an ownership change of the loss subgroup, within the meaning of section 382(g), that gives rise to a subgroup limitation under section 382(a) (the section 382 event) with respect to that carryover.

(v) The SRLY event and the change date of the section 382 event occur on the same date. However, under paragraph (g)(4) of this section, because the SRLY subgroup and the loss subgroup are not coextensive, T's Year 1 net operating loss carryover is subject to a SRLY limitation.

(vi) With respect to the Year 3 net operating loss carryover, S and T compose both a SRLY subgroup and a loss subgroup under §1.1502–91(d)(1). Thus, paragraph (g)(1) of this section applies, and the S group's Year 3 net operating loss carryover is not subject to a SRLY limitation.

Example 8. SRLY after overlap. (i) Individual A owns all of the stock of R and M, each the

common parent of a consolidated group. B, an individual unrelated to Individual A, owns all of the stock of D. In Year 1, D incurs a $100 net operating loss that is carried forward. At the beginning of Year 3, R acquires all of the stock of D. In Year 5, M acquires all of the stock of R in a transaction that did not result in an ownership change of R.

(ii) R's Year 3 acquisition of D results in D becoming a member of the R group (the SRLY event) and also results in an ownership change of D, that gives rise to a limitation under section 382(a) (the section 382 event) with respect to D's net operating loss carryover.

(iii) Because the SRLY event and the change date of the section 382 event occur on the same date, there is an overlap of the application of paragraph (c) of this section and section 382 with respect to D's net operating loss. Consequently, under this paragraph (g), D's Year 1 $100 net operating loss is not subject to a SRLY limitation in the R group.

(iv) M's Year 5 acquisition of R results in R and D becoming members of the M group (the SRLY event), but does not result in an ownership change of R or D that gives rise to a limitation under section 382(a). Because there is no section 382 event, the application of the SRLY rules and section 382 do not overlap. Consequently, D's Year 1 $100 net operating loss is subject to a SRLY limitation in the M group.

(v) Because D's Year 1 net operating loss carryover was subject to the overlap rule of paragraph (g) of this section when it joined the R group, under § 1.1502–21(c)(2), the SRLY subgroup with respect to that carryover includes all of the members of the R group that joined the M group at the same time as D.

Example 9. Overlap—Interim losses. (i) Individual A owns all of the stock of P and S, each the common parent of a consolidated group. S owns all of the stock of T, its only subsidiary. B, an individual unrelated to Individual A, owns all of the stock of M, the common parent of a consolidated group. In Year 1, the S group has a $100 consolidated net operating loss. On January 1 of Year 2, P acquires all of the stock of S from Individual A. On December 31 of Year 2, M acquires 51% of the stock of P from Individual A. On May 31 of Year 3, M acquires the remaining 49% of the stock of P from Individual A. The P group, for the Year 3 period prior to June 1, had a $50 consolidated net operating loss, and under paragraph (b)(2)(iv) of this section, the loss is attributable entirely to S. Other than the losses described above, the P group does not have any other consolidated net operating losses.

(ii) In the P group, S's $100 loss carryover is treated as arising in a SRLY and is subject to the limitation under paragraph (c) of this section. A SRLY subgroup with respect to that loss is composed of S and T, the members which were members of the S group as to which the loss was not a SRLY.

(iii) M's December 31 purchase of 51% of P is a section 382 event because it results in an ownership change of the S loss subgroup that gives rise to a section 382(a) limitation (the section 382 event) with respect to the Year 1 net operating loss carryover. The purchase, however, does not result in an ownership change of P because it is not a loss corporation under section 382(k)(1). M's May 31 purchase of 49% of P results in P, S, and T becoming members of the M group and is therefore a SRLY event.

(iv) With respect to the Year 1 net operating loss, S and T compose a SRLY subgroup under paragraph (c)(2) of this section and a loss subgroup under § 1.1502–91(d)(1). The loss subgroup does not include P because the only loss at the time of the section 382 event was subject to SRLY with respect to the P group. See § 1.1502–91(d)(1).

(v) Because the SRLY event occured within six months of the change date of the section 382 event and the SRLY subgroup and loss subgroup are coextensive with respect to the Year 1 net operating loss carryover, there is an overlap of the application of the SRLY rules and the application of section 382 within the meaning of paragraph (g) of this section. Thus, the SRLY limitation does not apply to that carryover.

(vi) The Year 3 net operating loss, which arose between the section 382 event and the SRLY event, is a net operating loss described in paragraph (g)(2)(ii)(B) of this section because it is the net operating loss of a corporation whose SRLY event occurs within the six month period beginning on the date of a section 382 event.

(vii) With respect to the Year 3 net operating loss, P, S, and T compose a SRLY subgroup under paragraph (c)(2) of this section. Because P, a member of the SRLY subgroup for the Year 3 carryover, is not also a member of a SRLY subgroup that has net operating loss carryovers described in paragraph (g)(2)(ii)(A) of this section (the Year 1 net operating loss), the Year 3 carryover is subject to a SRLY limitation in the M group. See paragraph (g)(4)(ii) of this section.

(h) *Effective date*—(1) *In general.* This section generally applies to taxable years for which the due date (without extensions) of the consolidated return is after June 25, 1999. However—

(i) In the event that paragraph (g)(1) of this section does not apply to a particular net operating loss carryover in the current group, then solely for purposes of applying paragraph (c) of this section to determine a limitation with

respect to that carryover and with respect to which the SRLY register (consolidated taxable income determined by reference to only the member's or subgroup's items of income, gain, deduction, or loss) began in a taxable year for which the due date of the return was on or before June 25, 1999, paragraph (c)(2) of this section shall be applied without regard to the phrase ''or for a carryover that was subject to the overlap rule described in paragraph (g) of this section or §1.1502–15(g) with respect to another group (the former group)''; and

(ii) For purposes of paragraph (g) of this section, only an ownership change to which section 382(a), as amended by the Tax Reform Act of 1986, applies shall constitute a section 382 event.

(2) *SRLY limitation.* Except in the case of those members (including members of a SRLY subgroup) described in paragraph (h)(3) of this section, a group does not take into account a consolidated taxable year beginning before January 1, 1997, in determining the aggregate of the consolidated taxable income under paragraph (c)(1) of this section (including for purposes of §1.1502–15 and §1.1502–22(c)) for the members (or SRLY subgroups).

(3) *Prior retroactive election.* A consolidated group that applied the rules of §1.1502–21T(g)(3) in effect prior to June 25, 1999, as contained in 26 CFR part 1 revised April 1, 1999, to all consolidated return years ending on or after January 29, 1991, and beginning before January 1, 1997, does not take into account a consolidated taxable year beginning before January 29, 1991, in determining the aggregate of the consolidated taxable income under paragraph (c)(1) of this section (including for purposes of §1.1502–15 and §1.1502–22(c)) for the members (or SRLY subgroups).

(4) *Offspring rule.* Paragraph (b)(2)(ii)(B) of this section applies to net operating losses arising in taxable years ending on or after June 25, 1999.

(5) *Waiver of carrybacks.* Paragraph (b)(3)(ii)(B) of this section (relating to the waiver of carrybacks for acquired members) applies to acquisitions occurring after June 25, 1999.

(6) *Certain prior periods.* Paragraphs (b)(1), (b)(2)(ii)(A), (b)(2)(iv), and (c)(2)(vii) of this section shall apply to taxable years the original return for which the due date (without regard to extensions) is after March 21, 2005. Paragraph (b)(2)(ii)(A) of this section and §1.1502–21T(b)(1), (b)(2)(iv), and (c)(2)(vii) as contained in 26 CFR part 1 revised as of April 1, 2004, shall apply to taxable years the original return for which the due date (without regard to extensions) is on or before March 21, 2005, and after August 29, 2003. For taxable years the original return for which the due date (without regard to extensions) is on or before August 29, 2003, see paragraphs (b)(1), (b)(2)(ii)(A), (b)(2)(iv), and (c)(2)(vii) of this section and §1.1502–21T(b)(1) as contained in 26 CFR part 1 revised as of April 1, 2003.

(7) *Prior periods.* For certain taxable years ending on or before June 25, 1999, see §1.1502–21T in effect prior to June 25, 1999, as contained in 26 CFR part 1 revised April 1, 1999, as applicable.

(8) *Losses treated as expired under §1.1502–35(f)(1).* Paragraph (b)(3)(v) of this section is effective for losses treated as expired under §1.1502–35(f) on and after March 10, 2006. For rules regarding losses treated as expired before March 10, 2006, see §1.1502–21T(h)(8) as contained in 26 CFR part 1 in effect on January 1, 2006.

[T.D. 8823, 64 FR 36105, July 2, 1999; 64 FR 41784, Aug. 2, 1999, as amended by T.D. 8884, 65 FR 33759, May 25, 2000; T.D. 8997, 67 FR 38002, May 31, 2002; T.D. 9048, 68 FR 12291, Mar. 14, 2003; T.D. 9089, 68 FR 52491, Sept. 4, 2003; T.D. 9100, 68 FR 70706, Dec. 19, 2003; 69 FR 5017, Feb. 3, 2004; T.D. 9192, 70 FR 14403, Mar. 22, 2005; T.D. 9254, 71 FR 13009, 13018, Mar. 14, 2006]

§1.1502–21T Net operating losses (temporary).

(a) through (b)(2)(v) [Reserved]. For further guidance, see §1.1502–21(a) through (b)(2)(v).

(3) *Special rules*—(i) *Election to relinquish carryback.* A group may make an irrevocable election under section 172(b)(3) to relinquish the entire carryback period with respect to a CNOL for any consolidated return year. Except as provided in paragraph (b)(3)(ii)(B) of this section, the election may not be made separately for any member (whether or not it remains a member), and must be made in a separate statement entitled ''THIS IS AN ELECTION UNDER §1.1502–21(b)(3)(i)

TO WAIVE THE ENTIRE CARRYBACK PERIOD PURSUANT TO SECTION 172(b)(3) FOR THE [insert consolidated return year] CNOLs OF THE CONSOLIDATED GROUP OF WHICH [insert name and employer identification number of common parent] IS THE COMMON PARENT''. The statement must be filed with the group's income tax return for the consolidated return year in which the loss arises. If the consolidated return year in which the loss arises begins before January 1, 2003, the statement making the election must be signed by the common parent. If the consolidated return year in which the loss arises begins after December 31, 2002, the election may be made in an unsigned statement.

(b)(3)(ii) through (b)(3)(ii)(A) [Reserved]. For further guidance, *see* § 1.1502–21 (b)(3)(ii) through (b)(3)(ii)(A).

(B) *Acquisition of member from another consolidated group*. If one or more members of a consolidated group becomes a member of another consolidated group, the acquiring group may make an irrevocable election to relinquish, with respect to all consolidated net operating losses attributable to the member, the portion of the carryback period for which the corporation was a member of another group, provided that any other corporation joining the acquiring group that was affiliated with the member immediately before it joined the acquiring group is also included in the waiver. This election is not a yearly election and applies to all losses that would otherwise be subject to a carryback to a former group under section 172. The election must be made in a separate statement entitled ''THIS IS AN ELECTION UNDER § 1.1502–21(b)(3)(ii)(B)(2) TO WAIVE THE PRE-[insert first taxable year for which the member (or members) was not a member of another group] CARRYBACK PERIOD FOR THE CNOLs attributable to [insert names and employer identification number of members].'' The statement must be filed with the acquiring consolidated group's original income tax return for the year the corporation (or corporations) became a member. If the year in which the corporation (or corporations) became a member begins before January 1, 2003, the statement must be signed by the common parent and each of the members to which it applies. If the year in which the corporation (or corporations) became a member begins after December 31, 2002, the election may be made in an unsigned statement.

(C) *Partial waiver of carryback period for 2001 and 2002 losses—(1) Application*. The acquiring group may make the elections described in paragraphs (b)(3)(ii)(C)(*2*) and (*3*) of this section with respect to an acquired member or members only if it did not file a valid election described in § 1.1502–21(b)(3)(ii)(B) with respect to such acquired member or members on or before May 31, 2002.

(*2*) *Partial waiver of entire pre-acquisition carryback period*. If one or more members of a consolidated group become members of another consolidated group after June 25, 1999, then, with respect to all consolidated net operating losses attributable to the member for the taxable year ending during either 2001 or 2002, or both, the acquiring group may make an irrevocable election to relinquish the portion of the carryback period for such losses for which the corporation was a member of another group, provided that any other corporation joining the acquiring group that was affiliated with the member immediately before it joined the acquiring group is also included in the waiver and that the conditions of this paragraph are satisfied. The acquiring group cannot make the election described in this paragraph with respect to any consolidated net operating losses arising in a particular taxable year if any carryback is claimed, as provided in paragraph (b)(3)(ii)(C)(*4*) of this section, with respect to any such losses on a return or other filing by a group of which the acquired member was previously a member and such claim is filed on or before the date the election described in this paragraph is filed. The election must be made in a separate statement entitled ''THIS IS AN ELECTION UNDER SECTION 1.1502–21T (b)(3)(ii)(C)(*2*) TO WAIVE THE PRE-[insert first day of the first taxable year for which the member (or members) was a member of the acquiring group] CARRYBACK PERIOD FOR THE CNOLS ATTRIBUTABLE TO THE

[insert taxable year of losses] TAXABLE YEAR(S) OF [insert names and employer identification numbers of members].'' Such statement must be filed as provided in paragraph (b)(3)(ii)(C)(*5*) of this section.

(*3*) *Partial waiver of pre-acquisition extended carryback period.* If one or more members of a consolidated group become members of another consolidated group, then, with respect to all consolidated net operating losses attributable to the member for the taxable year ending during either 2001 or 2002, or both, the acquiring group may make an irrevocable election to relinquish the portion of the carryback period for such losses for which the corporation was a member of another group to the extent that such carryback period includes one or more taxable years that are prior to the taxable year that is 2 taxable years preceding the taxable year of the loss, provided that any other corporation joining the acquiring group that was affiliated with the member immediately before it joined the acquiring group is also included in the waiver and that the conditions of this paragraph are satisfied. The acquiring group cannot make the election described in this paragraph with respect to any consolidated net operating losses arising in a particular taxable year if a carryback to one or more taxable years that are prior to the taxable year that is 2 taxable years preceding the taxable year of the loss is claimed, as provided in paragraph (b)(3)(ii)(C)(*4*) of this section, with respect to any such losses on a return or other filing by a group of which the acquired member was previously a member and such claim is filed on or before the date the election described in this paragraph is filed. The election must be made in a separate statement entitled ''THIS IS AN ELECTION UNDER SECTION 1.1502–21T (b)(3)(ii)(C)(*3*) TO WAIVE THE PRE-[insert first day of the first taxable year for which the member (or members) was a member of the acquiring group] EXTENDED CARRYBACK PERIOD FOR THE CNOLS ATTRIBUTABLE TO THE [insert taxable year of losses] TAXABLE YEAR(S) OF [insert names and employer identification numbers of members].'' Such statement must be filed as provided in paragraph (b)(3)(ii)(C)(*5*) of this section.

(*4*) *Claim for a carryback.* For purposes of paragraphs (b)(3)(ii)(C)(*2*) and (*3*) of this section, a carryback is claimed with respect to a consolidated net operating loss if there is a claim for refund, an amended return, an application for a tentative carryback adjustment, or any other filing that claims the benefit of the net operating loss in a taxable year prior to the taxable year of the loss, whether or not subsequently revoked in favor of a claim based on a 5-year carryback period.

(*5*) *Time and manner for filing statement.* A statement described in paragraph (b)(3)(ii)(C)(*2*) or (*3*) of this section that relates to consolidated net operating losses attributable to a taxable year ending during 2001 must be filed with the acquiring consolidated group's timely filed (including extensions) original or amended return for the taxable year ending during 2001, provided that such original or amended return is filed on or before October 31, 2002. A statement described in paragraph (b)(3)(ii)(C)(*2*) or (*3*) of this section that relates to consolidated net operating losses attributable to a taxable year ending during 2002 must be filed with the acquiring consolidated group's timely filed (including extensions) original or amended return for the taxable year ending during 2001 or 2002, provided that such original or amended return is filed on or before September 15, 2003.

(b)(3)(iii) and (b)(3)(iv) [Reserved]. For further guidance, see §1.1502–21(b)(3)(iii) and (b)(3)(iv).

(c)(1) through (h)(7) [Reserved]. For further guidance, see §1.1502–21(c)(1) through (h)(7).

[T.D. 9048, 68 FR 12291, Mar. 14, 2003; 68 FR 16430, Apr. 4, 2003; T.D. 9089, 68 FR 52491, Sept. 4, 2003; T.D. 9100, 68 FR 70706, Dec. 19, 2003; 69 FR 5017, Feb. 3, 2004; T.D. 9192, 70 FR 14404, Mar. 22, 2005; T.D. 9254, 71 FR 13009, Mar. 14, 2006]

§ 1.1502–22 Consolidated capital gain and loss.

(a) *Capital gain.* The determinations under section 1222, including capital gain net income, net long-term capital gain, and net capital gain, with respect to members during consolidated return

years are not made separately. Instead, consolidated amounts are determined for the group as a whole. The consolidated capital gain net income for any consolidated return year is determined by reference to—

(1) The aggregate gains and losses of members from sales or exchanges of capital assets for the year (other than gains and losses to which section 1231 applies);

(2) The consolidated net section 1231 gain for the year (determined under § 1.1502–23); and

(3) The net capital loss carryovers or carrybacks to the year.

(b) *Net capital loss carryovers and carrybacks*—(1) *In general.* The determinations under section 1222, including net capital loss and net short-term capital loss, with respect to members during consolidated return years are not made separately. Instead, consolidated amounts are determined for the group as a whole. Losses included in the consolidated net capital loss may be carried to consolidated return years, and, after apportionment, may be carried to separate return years. The net capital loss carryovers and carrybacks consist of—

(i) Any consolidated net capital losses of the group; and

(ii) Any net capital losses of the members arising in separate return years.

(2) *Carryovers and carrybacks generally.* The net capital loss carryovers and carrybacks to a taxable year are determined under the principles of section 1212 and this section. Thus, losses permitted to be absorbed in a consolidated return year generally are absorbed in the order of the taxable years in which they were sustained, and losses carried from taxable years ending on the same date, and which are available to offset consolidated capital gain net income, generally are absorbed on a pro rata basis. Additional rules provided under the Internal Revenue Code or regulations also apply, as well as the SRLY limitation under paragraph (c) of this section. See, e.g., section 382(l)(2)(B).

(3) *Carryovers and carrybacks of consolidated net capital losses to separate return years.* If any consolidated net capital loss that is attributable to a member may be carried to a separate return year under the principles of § 1.1502–21(b)(2), the amount of the consolidated net capital loss that is attributable to the member is apportioned and carried to the separate return year (apportioned loss).

(4) *Special rules*—(i) *Short years in connection with transactions to which section 381(a) applies.* If a member distributes or transfers assets to a corporation that is a member immediately after the distribution or transfer in a transaction to which section 381(a) applies, the transaction does not cause the distributor or transferor to have a short year within the consolidated return year of the group in which the transaction occurred that is counted as a separate year for purposes of determining the years to which a net capital loss may be carried.

(ii) *Special status losses.* [Reserved]

(c) *Limitations on net capital loss carryovers and carrybacks from separate return limitation years.* The aggregate of the net capital losses of a member arising (or treated as arising) in SRLYs that are included in the determination of consolidated capital gain net income for all consolidated return years of the group under paragraph (a) of this section may not exceed the aggregate of the consolidated capital gain net income for all consolidated return years of the group determined by reference to only the member's items of gain and loss from capital assets as defined in section 1221 and trade or business assets defined in section 1231(b), including the member's losses actually absorbed by the group in the taxable year (whether or not absorbed by the member). The principles of § 1.1502–21(c) (including the SRLY subgroup principles under § 1.1502–21(c)(2)) apply with appropriate adjustments for purposes of applying this paragraph (c).

(d) *Coordination with respect to consolidated return change of ownership limitation occurring in consolidated return years beginning before January 1, 1997.* If a consolidated return change of ownership occurred before January 1, 1997, the principles of § 1.1502–22A(d) apply to determine the amount of the aggregate of the net capital loss attributable to old members of the group (as those terms are defined in § 1.1502–1(g)), that

may be included in the net capital loss carryover under paragraph (b) of this section. For this purpose, § 1.1502–1(g) is applied by treating that date as the end of the year of change.

(e) *Consolidated net capital loss.* Any excess of losses over gains, as determined under paragraph (a) of this section (without regard to any carryovers or carrybacks), is also referred to as the consolidated net capital loss.

(f) *Predecessors and successors.* For purposes of this section, the principles of § 1.1502–21(f) apply with appropriate adjustments.

(g) *Overlap with section 383*—(1) *General rule.* The limitation provided in paragraph (c) of this section does not apply to net capital loss carryovers ((other than a hypothetical carryover like those described in § 1.1502–21(c)(1)(i)(D) and a carryover like those described in § 1.1502–21(c)(1)(ii)) when the application of paragraph (c) of this section results in an overlap with the application of section 383. For a similar rule applying in the case of net capital loss carryovers like those described in §§ 1.1502–21(c)(1)(i)(D) and (c)(1)(ii), see § 1.1502–15(g).

(2) *Definitions*—(i) *Generally.* For purposes of this paragraph (g), the definitions and nomenclature contained in sections 382 and 383, the regulations thereunder, and §§ 1.1502–90 through 1.1502–99 apply.

(ii) *Overlap.* (A) An overlap of the application of paragraph (c) of this section and the application of section 383 with respect to a net capital loss carryover occurs if a corporation becomes a member of the consolidated group (the SRLY event) within six months of the change date of an ownership change giving rise to a section 382 limitation with respect to that carryover (the section 383 event).

(B) If an overlap described in paragraph (g)(2)(ii)(A) of this section occurs with respect to net capital loss carryovers of a corporation whose SRLY event occurs within the six month period beginning on the date of a section 383 event, then an overlap is treated as also occurring with respect to that corporation's net capital loss carryover that arises within the period beginning with the section 383 event and ending with the SRLY event.

(C) For special rules in the event that there is a SRLY subgroup and/or a loss subgroup as defined in § 1.1502–91(d)(1) with respect to a carryover, see paragraph (g)(4) of this section.

(3) *Operating rules*—(i) *Section 383 event before SRLY event.* If a SRLY event occurs on the same date as a section 383 event or within the six month period beginning on the date of the section 383 event, paragraph (g)(1) of this section applies beginning with the tax year that includes the SRLY event.

(ii) *SRLY event before section 383 event.* If a section 383 event occurs within the period beginning the day after the SRLY event and ending six months after the SRLY event, paragraph (g)(1) of this section applies starting with the first tax year that begins after the section 383 event.

(4) *Subgroup rules.* In general, in the case of a net capital loss carryover for which there is a SRLY subgroup and a loss subgroup (as defined in § 1.1502–91(d)(1)), the principles of this paragraph (g) apply to the SRLY subgroup, and not separately to its members. However, paragraph (g)(1) of this section applies—

(i) With respect to a carryover described in paragraph (g)(2)(ii)(A) of this section only if—

(A) All members of the SRLY subgroup with respect to that carryover are also included in a loss subgroup with respect to that carryover; and

(B) All members of a loss subgroup with respect to that carryover are also members of a SRLY subgroup with respect to that carryover; and

(ii) With respect to a carryover described in paragraph (g)(2)(ii)(B) of this section only if all members of the SRLY subgroup for that carryover are also members of a SRLY subgroup that has net capital loss carryovers described in paragraph (g)(2)(ii)(A) of this section that are subject to the overlap rule of paragraph (g)(1) of this section.

(h) *Effective date*—(1) *In general.* This section generally applies to taxable years for which the due date (without extensions) of the consolidated return is after June 25, 1999. However—

(i) In the event that paragraph (g)(1) of this section does not apply to a particular net capital loss carryover in the current group, then solely for purposes

of applying paragraph (c) of this section to determine a limitation with respect to that carryover and with respect to which the SRLY register (consolidated taxable income determined by reference to only the member's or subgroup's items of income, gain, deduction, or loss) began in a taxable year for which the due date of the return was on or before June 25, 1999, the principles of § 1.1502–21(c)(2) shall be applied without regard to the phrase ''or for a carryover that was subject to the overlap rule described in paragraph (g) of this section or § 1.1502–15(g) with respect to another group (the former group)''; and

(ii) For purposes of paragraph (g) of this section, only an ownership change to which section 383, as amended by the Tax Reform Act of 1986, applies and which results in a section 382 limitation shall constitute a section 383 event.

(2) *Prior periods.* For certain taxable years ending on or before June 25, 1999, see § 1.1502–22T in effect prior to June 25, 1999, as contained in 26 CFR part 1 revised April 1, 1999, as applicable.

[T.D. 8823, 64 FR 36114, July 2, 1999]

§ 1.1502–23 Consolidated net section 1231 gain or loss.

(a) *In general.* Net section 1231 gains and losses of members arising during consolidated return years are not determined separately. Instead, the consolidated net section 1231 gain or loss is determined under this section for the group as a whole.

(b) *Example.* The following example illustrates the provisions of this section:

Example. Use of SRLY registers with net gains and net losses under section 1231. (i) In Year 1, T sustains a $20 net capital loss. At the beginning of Year 2, T becomes a member of the P group. T's capital loss carryover from Year 1 is subject to SRLY limits under § 1.1502–22(c). The members of the P group contribute the following to the consolidated taxable income for Year 2 (computed without regard to T's net capital loss carryover under § 1.1502–22):

	P	T
Year 1 (SRLY)		
Ordinary	.....	.....
Capital	.....	(20)
Year 2		
Ordinary	10	20
Capital	70	0
§ 1231	(60)	30

(ii) Under section 1231, if the section 1231 losses for any taxable year exceed the section 1231 gains for such taxable year, such gains and losses are treated as ordinary gains or losses. Because the P group's section 1231 losses, $(60), exceed the section 1231 gains, $30, the P group's net loss is treated as an ordinary loss. T's net section 1231 gain has the same character as the P group's consolidated net section 1231 loss, so T's $30 of section 1231 income is treated as ordinary income for purposes of applying § 1.1502–22(c). Under § 1.1502–22(c), the group's consolidated net capital gain determined by reference only to T's items is $0. None of T's capital loss carryover from Year 1 may be taken into account in Year 2.

(c) *Recapture of ordinary loss.* [Reserved]

(d) *Effective date*—(1) *In general.* This section applies to gains and losses arising in the determination of consolidated net section 1231 gain or loss for taxable years for which the due date (without extensions) of the consolidated return is after June 25, 1999.

(2) *Application to prior periods.* See § 1.1502–21(h)(3) for rules applicable to groups that applied the rules of this section to consolidated return years ending on or after January 29, 1991, and beginning before January 1, 1997.

[T.D. 8823, 64 FR 36115, July 2, 1999; 64 FR 41784, Aug. 2, 1999]

§ 1.1502–24 Consolidated charitable contributions deduction.

(a) *Determination of amount of consolidated charitable contributions deduction.* The deduction allowed by section 170 for the taxable year shall be the lesser of:

(1) The aggregate deductions of the members of the group allowable under section 170 (determined without regard to section 170(b)(2)), plus the consolidated charitable contribution carryovers to such year, or

(2) Five percent of the adjusted consolidated taxable income as determined under paragraph (c) of this section.

(b) *Carryover of excess charitable contributions.* The consolidated charitable

contribution carryovers to any consolidated return year shall consist of any excess consolidated charitable contributions of the group, plus any excess charitable contributions of members of the group arising in separate return years of such members, which may be carried over to the taxable year under the principles of section 170(b) (2) and (3). However, such consolidated carryovers shall not include any excess charitable contributions apportioned to a corporation for a separate return year pursuant to paragraph (e) of § 1.1502–79.

(c) *Adjusted consolidated taxable income.* For purposes of this section, the adjusted consolidated taxable income of the group for any consolidated return year shall be the consolidated taxable income computed without regard to this section, section 242, section 243(a) (2) and (3), § 1.1502–25, § 1.1502–26, and § 1.1502–27, and without regard to any consolidated net operating or net capital loss carrybacks to such year.

[T.D. 6894, 31 FR 11794, Sept. 8, 1966]

§ 1.1502–26 Consolidated dividends received deduction.

(a) *In general.* (1) The consolidated dividends received deduction for the taxable year shall be the lesser of:

(i) The aggregate of the deduction of the members of the group allowable under sections 243(a)(1), 244(a), and 245 (computed without regard to the limitations provided in section 246(b)), or

(ii) 85 percent of the consolidated taxable income computed without regard to the consolidated net operating loss deduction, consolidated section 247 deduction, the consolidated dividends received deduction, and any consolidated net capital loss carryback to the taxable year.

Subdivision (ii) of this subparagraph shall not apply for any consolidated return year for which there is a consolidated net operating loss. (See §§ 1.1502–21(e) or 1.1502–21A(f), as appropriate for the definition of a consolidated net operating loss.)

(2) If any member computes a deduction under section 593(b)(2) for a taxable year beginning after July 11, 1969, and ending before August 30, 1975, the deduction otherwise computed under this section shall be reduced by an amount determined by multiplying the deduction (determined without regard to this sentence and without regard to dividends received by the common parent if such parent does not use the percentage of income method provided by section 593(b)(2)) by the applicable percentage of the member with the highest applicable percentage (determined under subparagraphs (A) and (B) of section 593(b)(2)).

(3) For taxable years ending on or after August 30, 1975, the deduction otherwise computed under this section shall be reduced by the sum of the amounts determined under paragraph (a)(4) of this section for each member that is a thrift institution that computes a deduction under section 593(b)(2).

(4) For each thrift institution, the amount determined under this subparagraph is the product of:

(i) The portion of the deduction determined with regard to the sum of the dividends received by: (A) The thrift institution, and (B) any member in which that thrift institution owns, directly and with the application of paragraph (a)(5) of this section, 5 percent or more of the stock on any day during the consolidated return year, and

(ii) The thrift institution's applicable percentage determined under subparagraphs (A) and (B) of section 593(b)(2).

For purposes of this subparagraph, dividends allocated to a thrift institution under § 1.596–1(c) shall be considered received by the thrift institution.

(5) For purposes of paragraph (a)(4)(i) of this section, a member owning stock of another member (the ''second member'') shall be considered as owning its proportionate share of any stock of a member owned by the second member. Stock considered as being owned by reason of the preceding sentence shall, for purposes of applying that sentence, be treated as actually owned. The proportionate share of stock in a member owned by another member is the proportion which the value of the stock so owned bears to the value of all the outstanding stock in the member. For purposes of this paragraph the term ''stock'' includes nonvoting stock which is limited and preferred as to dividends.

(6) For purposes of paragraph (a)(4)(i) of this section, if two or more thrift institutions that are both members of the group each owns 5 percent or more of the same member's stock, the member's stock will be considered to be owned only by the thrift institution with the highest applicable percentage.

(b) *Intercompany dividends.* The deduction determined under paragraph (a) of this section is determined without taking into account intercompany dividends to the extent that, under § 1.1502–13(f)(2), they are not included in gross income. See § 1.1502–13 for additional rules relating to intercompany dividends.

(c) *Examples.* The provisions of this section may be illustrated by the following examples:

Example (1). Corporations P, S, and S–1 filed a consolidated return for the calendar year 1966 showing consolidated taxable income of $100,000 (determined without regard to the consolidated net operating loss deduction, consolidated dividends received deduction, and the consolidated section 247 deduction). Such corporations received dividends during such year from nonmember domestic corporations as follows:

	Dividends
Corporation:	
P	$6,000
S	10,000
S–1	34,000
Total	50,000

The dividends received deduction allowable to each member under section 243(a)(1) (computed without regard to the limitation in section 246(b)) is as follows: P has $5,100 (85 percent of $6,000), S has $8,500 (85 percent of $10,000), and S–1 has $28,900 (85 percent of $34,000), or a total of $42,500. Since $42,500 is less than $85,000 (85 percent of $100,000), the consolidated dividends received deduction is $42,500.

Example (2). Assume the same facts as in example (1) except that consolidated taxable income (computed without regard to the consolidated net operating loss deduction, consolidated dividends received deduction, and the consolidated section 247 deduction) was $40,000. The aggregate of the dividends received deductions, $42,500, computed without regard to section 246(b), results in a consolidated net operating loss of $2,500. See section 172(d)(6). Therefore, paragraph (a)(2) of this section does not apply and the consolidated dividends received deduction is $42,500.

[T.D. 6894, 31 FR 11794, Sept. 8, 1966, as amended by T.D. 7631, 44 FR 40497, July 11, 1979; T.D. 8597, 60 FR 36710, July 18, 1995; T.D. 8677, 61 FR 33323, June 27, 1996; T.D. 8823, 64 FR 36099, July 2, 1999]

§ 1.1502–27 Consolidated section 247 deduction.

(a) *Amount of deduction.* The consolidated section 247 deduction for the taxable year shall be an amount computed as follows:

(1) First, determine the amount which is the lesser of:

(i) The aggregate of the dividends paid (within the meaning of section 247(a)) during such year by members of the group which are public utilities (within the meaning of section 247(b)(1)) on preferred stock (within the meaning of section 247(b)(2)), other than dividends paid to other members of the group, or

(ii) The aggregate of the taxable income (or loss) (as determined under paragraph (b) of this section) of each such member which is a public utility.

(2) Then, multiply the amount determined under subparagraph (1) of this paragraph by the fraction specified in section 247(a)(2).

(b) *Computation of taxable income.* For purposes of paragraph (a)(1)(ii) of this section, the taxable income (or loss) of a member of the group described in paragraph (a)(1)(i) shall be determined under § 1.1502–12, adjusted for the following items taken into account in the computation of consolidated taxable income:

(1) The portion of the consolidated net operating loss deduction, the consolidated charitable contributions deduction, and the consolidated dividends received deduction, attributable to such member;

(2) Such member's capital gain net income (net capital gain for taxable years beginning before January 1, 1977) (determined without regard to any net capital loss carryover or carryback attributable to such member);

(3) Such member's net capital loss and section 1231 net loss, reduced by the portion of the consolidated net capital loss attributable to such member; and

(4) The portion of any consolidated net capital loss carryover or carryback attributable to such member which is absorbed in the taxable year.

[T.D. 6894, 31 FR 11794, Sept. 8, 1966, as amended by T.D. 7728, 45 FR 72650, Nov. 3, 1980]

§ 1.1502–28 Consolidated section 108.

(a) *In general.* This section sets forth rules for the application of section 108(a) and the reduction of tax attributes pursuant to section 108(b) when a member of the group realizes discharge of indebtedness income that is excluded from gross income under section 108(a) (excluded COD income).

(1) *Application of section 108(a).* Section 108(a)(1)(A) and (B) is applied separately to each member that realizes excluded COD income. Therefore, the limitation of section 108(a)(3) on the amount of discharge of indebtedness income that is treated as excluded COD income is determined based on the assets (including stock and securities of other members) and liabilities (including liabilities to other members) of only the member that realizes excluded COD income.

(2) *Reduction of tax attributes attributable to the debtor*—(i) *In general.* With respect to a member that realizes excluded COD income in a taxable year, the tax attributes attributable to that member (and its direct and indirect subsidiaries to the extent required by section 1017(b)(3)(D) and paragraph (a)(3) of this section), including basis of assets and losses and credits arising in separate return limitation years, shall be reduced as provided in sections 108 and 1017 and this section. Basis of subsidiary stock, however, shall not be reduced below zero pursuant to paragraph (a)(2) of this section (including when subsidiary stock is treated as depreciable property under section 1017(b)(3)(D) when there is an election under section 108(b)(5)).

(ii) *Consolidated tax attributes attributable to a member.* For purposes of this section, the amount of a consolidated tax attribute (e.g., a consolidated net operating loss) that is attributable to a member shall be determined pursuant to the principles of § 1.1502–21(b)(2)(iv). In addition, if the member is a member of a separate return limitation year subgroup, the amount of a tax attribute that arose in a separate return limitation year that is attributable to that member shall also be determined pursuant to the principles of § 1.1502–21(b)(2)(iv).

(3) *Look-through rules*—(i) *Priority of section 1017(b)(3)(D).* If a member treats stock of a subsidiary as depreciable property pursuant to section 1017(b)(3)(D), the basis of the depreciable property of such subsidiary shall be reduced pursuant to section 1017(b)(3)(D) prior to the application of paragraph (a)(3)(ii) of this section.

(ii) *Application of additional look-through rule.* If the basis of stock of a corporation (the lower-tier member) that is owned by another corporation (the higher-tier member) is reduced pursuant to sections 108 and 1017 and paragraph (a)(2) of this section (but not as a result of treating subsidiary stock as depreciable property pursuant to section 1017(b)(3)(D)), and both of such corporations are members of the same consolidated group on the last day of the higher-tier member's taxable year that includes the date on which the excluded COD income is realized or the first day of the higher-tier member's taxable year that follows the taxable year that includes the date on which the excluded COD income is realized, solely for purposes of sections 108 and 1017 and this section other than paragraphs (a)(4) and (b)(1) of this section, the lower-tier member shall be treated as realizing excluded COD income on the last day of the taxable year of the higher-tier member that includes the date on which the higher-tier member realized the excluded COD income. The amount of such excluded COD income shall be the amount of such basis reduction. Accordingly, the tax attributes attributable to such lower-tier member shall be reduced as provided in sections 108 and 1017 and this section. To the extent that the excluded COD income realized by the lower-tier member pursuant to this paragraph (a)(3) does not reduce a tax attribute attributable to the lower-tier member, such excluded COD income shall not be applied to reduce tax attributes attributable to any member under paragraph (a)(4) of this section and shall not cause an excess loss account to be

taken into account under § 1.1502–19(b)(1) and (c)(1)(iii)(B).

(4) *Reduction of certain tax attributes attributable to other members.* To the extent that, pursuant to paragraph (a)(2) of this section, the excluded COD income is not applied to reduce the tax attributes attributable to the member that realizes the excluded COD income, after the application of paragraph (a)(3) of this section, such amount shall be applied to reduce the remaining consolidated tax attributes of the group, other than consolidated tax attributes to which a SRLY limitation applies, as provided in section 108 and this section. Such amount also shall be applied to reduce the tax attributes attributable to members that arose (or are treated as arising) in a separate return limitation year to the extent that the member that realizes excluded COD income is a member of the separate return limitation year subgroup with respect to such attribute if a SRLY limitation applies to the use of such attribute. In addition, such amount shall be applied to reduce the tax attributes attributable to members that arose in a separate return year or that arose (or are treated as arising) in a separate return limitation year if no SRLY limitation applies to the use of such attribute. The reduction of each tax attribute pursuant to the three preceding sentences shall be made in the order prescribed in section 108(b)(2) and pursuant to the principles of § 1.1502–21(b)(1). Except as otherwise provided in this paragraph (a)(4), a tax attribute that arose in a separate return year or that arose (or is treated as arising) in a separate return limitation year is not subject to reduction pursuant to this paragraph (a)(4). Basis in assets is not subject to reduction pursuant to this paragraph (a)(4). Finally, to the extent that the realization of excluded COD income by a member pursuant to paragraph (a)(3) does not reduce a tax attribute attributable to such lower-tier member, such excess shall not be applied to reduce tax attributes attributable to any member pursuant to this paragraph (a)(4).

(b) *Special rules*—(1) *Multiple debtor members*—(i) *Reduction of tax attributes attributable to debtor members prior to reduction of consolidated tax attributes.* If in a single taxable year multiple members realize excluded COD income, paragraphs (a)(2) and (3) of this section shall apply with respect to the excluded COD income of each such member before the application of paragraph (a)(4) of this section.

(ii) *Reduction of higher-tier debtor's tax attributes.* If in a single taxable year multiple members realize excluded COD income and one such member is a higher-tier member of another such member, paragraphs (a)(2) and (3) of this section shall be applied with respect to the excluded COD income of the higher-tier member before such paragraphs are applied to the excluded COD income of the other such member. In applying the rules of paragraph (a)(2) and (3) of this section with respect to the excluded COD income of the higher-tier member, the liabilities that give rise to the excluded COD income of the other such member shall not be treated as discharged for purposes of computing the limitation on basis reduction under section 1017(b)(2). A member (the first member) is a higher-tier member of another member (the second member) if the first member is the common parent or investment adjustments under § 1.1502–32 with respect to the stock of the second member would affect investment adjustments with respect to the stock of the first member.

(iii) *Reduction of additional tax attributes.* If more than one member realizes excluded COD income that has not been applied to reduce a tax attribute attributable to such member (the remaining COD amount) and the remaining tax attributes available for reduction under paragraph (a)(4) of this section are less than the aggregate of the remaining COD amounts, after the application of paragraph (a)(2) of this section, each such member's remaining COD amount shall be applied on a pro rata basis (based on the relative remaining COD amounts), pursuant to paragraph (a)(4) of this section, to reduce such remaining available tax attributes.

(iv) *Ownership of lower-tier member by multiple higher-tier members.* If stock of a corporation is held by more than one higher-tier member of the group and

more than one such higher-tier member reduces its basis in such stock, then under paragraph (a)(3) of this section the excluded COD income resulting from the stock basis reductions shall be applied on a pro rata basis (based on the amount of excluded COD income caused by each basis reduction) to reduce the attributes of the corporation.

(v) *Ownership of lower-tier member by multiple higher-tier members in multiple groups.* If a corporation is a member of one group (the first group) on the last day of the first group's higher-tier member's taxable year that includes the date on which that higher-tier member realizes excluded COD income and is a member of another group (the second group) on the following day and the first group's higher-tier member and the second group's higher-tier member both reduce their basis in the stock of such corporation pursuant to sections 108 and 1017 and this section, paragraph (a)(3) of this section shall first be applied in respect of the excluded COD income that results from the reduction of the basis of the corporation's stock owned by the first group's higher-tier member and then shall be applied in respect of the excluded COD income that results from the reduction of the basis of the corporation's stock owned by the second group's higher-tier member.

(2) *Election under section 108(b)(5)*—(i) *Availability of election.* The group may make the election described in section 108(b)(5) for any member that realizes excluded COD income. The election is made separately for each member. Therefore, an election may be made for one member that realizes excluded COD income (either actually or pursuant to paragraph (a)(3) of this section) while another election, or no election, may be made for another member that realizes excluded COD income (either actually or pursuant to paragraph (a)(3) of this section). See §1.108–4 for rules relating to the procedure for making an election under section 108(b)(5).

(ii) *Treatment of shares with an excess loss account.* For purposes of applying section 108(b)(5)(B), the basis of stock of a subsidiary that has an excess loss account shall be treated as zero.

(3) *Application of section 1017*—(i) *Timing of basis reduction.* Basis of property shall be subject to reduction pursuant to the rules of sections 108 and 1017 and this section after the determination of the tax imposed by chapter 1 of the Internal Revenue Code for the taxable year during which the member realizes excluded COD income and any prior years and coincident with the reduction of other attributes pursuant to section 108 and this section. However, only the basis of property held as of the beginning of the taxable year following the taxable year during which the excluded COD income is realized is subject to reduction pursuant to sections 108 and 1017 and this section.

(ii) *Limitation of section 1017(b)(2).* The limitation of section 1017(b)(2) on the reduction in basis of property shall be applied by reference to the aggregate of the basis of the property held by the member that realizes excluded COD income, not the aggregate of the basis of the property held by all of the members of the group, and the liabilities of such member, not the aggregate liabilities of all of the members of the group.

(iii) *Treatment of shares with an excess loss account.* For purposes of applying section 1017(b)(2) and §1.1017–1, the basis of stock of a subsidiary that has an excess loss account shall be treated as zero.

(4) *Application of section 1245.* Notwithstanding section 1017(d)(1)(B), a reduction of the basis of subsidiary stock is treated as a deduction allowed for depreciation only to the extent that the amount by which the basis of the subsidiary stock is reduced exceeds the total amount of the attributes attributable to such subsidiary that are reduced pursuant to the subsidiary's consent under section 1017(b)(3)(D) or as a result of the application of paragraph (a)(3)(ii) of this section.

(5) *Reduction of basis of intercompany obligations and former intercompany obligations*—(i) *Intercompany obligations that cease to be intercompany obligations.* If excluded COD income is realized in a consolidated return year in which an intercompany obligation becomes an obligation that is not an intercompany obligation because the debtor or the

creditor becomes a nonmember or because the assets of the creditor are acquired by a nonmember in a transaction to which section 381(a) applies, the basis of such intercompany obligation is not available for reduction in respect of such excluded COD income pursuant to sections 108 and 1017 and this section. However, in such cases, the basis of the debt treated as new debt issued under §1.1502–13(g)(3) is available for reduction in respect of such excluded COD income pursuant to sections 108 and 1017 and this section.

(ii) *Intercompany obligations.* The reduction of the basis of an intercompany obligation pursuant to sections 108 and 1017 and this section shall not result in the satisfaction and reissuance of the obligation under §1.1502–13(g). Therefore, any income or gain (or reduction of loss or deduction) attributable to a reduction of the basis of an intercompany obligation will be taken into account when §1.1502–13(g)(3) applies to such obligation. Furthermore, §1.1502–13(c)(6)(i) (regarding the treatment of intercompany items if corresponding items are excluded or nondeductible) will not apply to exclude any amount of income or gain attributable to a reduction of the basis of an intercompany obligation pursuant to sections 108 and 1017 and this section. See §1.1502–13(g)(3)(i)(A) and (ii)(B)(*2*).

(6) *Taking into account excess loss account*—(i) *Determination of inclusion.* The determination of whether any portion of an excess loss account in a share of stock of a subsidiary that realizes excluded COD income is required to be taken into account as a result of the application of §1.1502–19(c)(1)(iii)(B) is made after the determination of the tax imposed by chapter 1 of the Internal Revenue Code for the year during which the member realizes excluded COD income (without regard to whether any portion of an excess loss account in a share of stock of the subsidiary is required to be taken into account) and any prior years, after the reduction of tax attributes pursuant to sections 108 and 1017 and this section, and after the adjustment of the basis of the share of stock of the subsidiary pursuant to §1.1502–32 to reflect the amount of the subsidiary's deductions and losses that are absorbed in the computation of taxable income (or loss) for the year of the disposition and any prior years, and the excluded COD income applied to reduce attributes and the attributes reduced in respect thereof. See §1.1502–11(c) for special rules related to the computation of tax that apply when an excess loss account is required to be taken into account.

(ii) *Timing of inclusion.* To the extent an excess loss account in a share of stock of a subsidiary that realizes excluded COD income is required to be taken into account as a result of the application of §1.1502–19(c)(1)(iii)(B), such amount shall be included on the group's tax return for the taxable year that includes the date on which the subsidiary realizes such excluded COD income.

(7) *Dispositions of stock.* See §1.1502–11(c) for limitations on the reduction of tax attributes when a member disposes of stock of another member (including dispositions that result from the application of §1.1502–19(c)(1)(iii)(B)) during a taxable year in which any member realizes excluded COD income.

(8) *Departure of member.* If the taxable year of a member (the departing member) during which such member realizes excluded COD income ends on or prior to the last day of the consolidated return year and, on the first day of the taxable year of such member that follows the taxable year during which such member realizes excluded COD income, such member is not a member of the group and does not have a successor member (within the meaning of paragraph (b)(10) of this section), all tax attributes listed in section 108(b)(2) that remain after the determination of the tax imposed that belong to members of the group (including the departing member and subsidiaries of the departing member) shall be subject to reduction as provided in section 108 and the regulations promulgated thereunder (including §1.108–7(c), if applicable) and this section.

(9) *Intragroup reorganization*—(i) *In general.* If the taxable year of a member during which such member realizes excluded COD income ends prior to the last day of the consolidated return year and, on the first day that follows

the taxable year of such member during which such member realizes excluded COD income, such member has a successor member, for purposes of applying the rules of sections 108 and 1017 and this section, notwithstanding § 1.108–7, the successor member shall be treated as the member that realized the excluded COD income. Thus, all attributes attributable to the successor member listed in section 108(b)(2) (including attributes that were attributable to the successor member prior to the date such member became a successor member) are available for reduction under paragraph (a)(2) of this section.

(ii) *Group structure change.* If a member that realizes excluded COD income acquires the assets of the common parent of the consolidated group in a transaction to which section 381(a) applies and succeeds such common parent under the principles of § 1.1502–75(d)(2) as the common parent of the consolidated group, the member's attributes that remain after the determination of tax for the group for the consolidated return year during which the excluded COD income is realized (and any prior years) (including attributes that were attributable to the former common parent prior to the date of the transaction to which section 381(a) applies) shall be available for reduction under paragraph (a)(2) of this section.

(10) *Definition of successor member.* A successor member means a person to which the member that realizes excluded COD income (or a successor member) transfers its assets in a transaction to which section 381(a) applies if such transferee is a member of the group immediately after the transaction.

(11) *Non-application of next day rule.* For purposes of applying the rules of sections 108 and 1017 and this section, the next day rule of § 1.1502–76(b)(1)(ii)(B) shall not apply to treat a member's excluded COD income as realized at the beginning of the day following the day on which such member's status as a member changes.

(c) *Examples.* The principles of paragraphs (a) and (b) of this section are illustrated by the following examples. Unless otherwise indicated, no election under section 108(b)(5) has been made and the taxable year of all consolidated groups is the calendar year. The examples are as follows:

Example 1. (i) *Facts.* P is the common parent of a consolidated group that includes subsidiary S1. P owns 80 percent of the stock of S1. In Year 1, the P group sustained a $250 consolidated net operating loss. Under the principles of § 1.1502–21(b)(2)(iv), of that amount, $125 was attributable to P and $125 was attributable to S1. On Day 1 of Year 2, P acquired 100 percent of the stock of S2, and S2 joined the P group. As of the beginning of Year 2, S2 had a $50 net operating loss carryover from Year 1, a separate return limitation year. In Year 2, the P group sustained a $200 consolidated net operating loss. Under the principles of § 1.1502–21(b)(2)(iv), of that amount, $90 was attributable to P, $70 was attributable to S1, and $40 was attributable to S2. In Year 3, S2 realized $200 of excluded COD income from the discharge of non-intercompany indebtedness. In that same year, the P group sustained a $50 consolidated net operating loss, of which $40 was attributable to S1 and $10 was attributable to S2 under the principles of § 1.1502–21(b)(2)(iv). As of the beginning of Year 4, S2 had Asset A with a fair market value of $10. After the computation of tax imposed for Year 3 and before the application of sections 108 and 1017 and this section, Asset A had a basis of $40 and S2 had no liabilities.

(ii) *Analysis*—(A) *Reduction of tax attributes attributable to debtor.* Pursuant to paragraph (a)(2) of this section, the tax attributes attributable to S2 must first be reduced to take into account its excluded COD income in the amount of $200.

(*1*) *Reduction of net operating losses.* Pursuant to section 108(b)(2)(A) and paragraph (a) of this section, the net operating loss and the net operating loss carryovers attributable to S2 under the principles of § 1.1502–21(b)(2)(iv) are reduced in the order prescribed by section 108(b)(4)(B). Accordingly, the consolidated net operating loss for Year 3 is reduced by $10, the portion of the consolidated net operating loss attributable to S2, to $40. Then, again pursuant to section 108(b)(4)(B), S2's net operating loss carryover of $50 from its separate return limitation year is reduced to $0. Finally, the consolidated net operating loss carryover from Year 2 is reduced by $40, the portion of that consolidated net operating loss carryover attributable to S2, to $160.

(*2*) *Reduction of basis.* Following the reduction of the net operating loss and the net operating loss carryovers attributable to S2, S2 reduces its basis in its assets pursuant to section 1017 and § 1.1017–1. Accordingly, S2 reduces its basis in Asset A by $40, from $40 to $0.

(B) *Reduction of remaining consolidated tax attributes.* The remaining $60 of excluded COD

income then reduces consolidated tax attributes pursuant to paragraph (a)(4) of this section. In particular, the remaining $40 consolidated net operating loss for Year 3 is reduced to $0. Then, the consolidated net operating loss carryover from Year 1 is reduced by $20 from $250 to $230. Pursuant to paragraph (a)(4) of this section, a pro rata amount of the consolidated net operating loss carryover from Year 1 that is attributable to each of P and S1 is treated as reduced. Therefore, $10 of the consolidated net operating loss carryover from Year 1 that is attributable to each of P and S1 is treated as reduced.

Example 2. (i) *Facts.* P is the common parent of a consolidated group that includes subsidiaries S1 and S2. P owns 100 percent of the stock of S1 and S1 owns 100 percent of the stock of S2. None of P, S1, or S2 has a separate return limitation year. In Year 1, the P group sustained a $50 consolidated net operating loss. Under the principles of § 1.1502–21(b)(2)(iv), of that amount, $10 was attributable to P, $20 was attributable to S1, and $20 was attributable to S2. In Year 2, the P group sustained a $70 consolidated net operating loss. Under the principles of § 1.1502–21(b)(2)(iv), of that amount, $30 was attributable to P, $30 was attributable to S1, and $10 was attributable to S2. In Year 3, S1 realized $170 of excluded COD income from the discharge of non-intercompany indebtedness. In that same year, the P group sustained a $50 consolidated net operating loss, of which $10 was attributable to S1 and $40 was attributable to S2 under the principles of § 1.1502–21(b)(2)(iv). As of the beginning of Year 4, S1's sole asset was the stock of S2, and S2 had Asset A with a $10 value. After the computation of tax imposed for Year 3 and before the application of sections 108 and 1017 and this section, S1 had an $80 basis in the S2 stock, Asset A had a basis of $0, and neither S1 nor S2 had any liabilities.

(ii) *Analysis*—(A) *Reduction of tax attributes attributable to debtor.* Pursuant to paragraph (a)(2) of this section, the tax attributes attributable to S1 must first be reduced to take into account its excluded COD income in the amount of $170.

(*1*) *Reduction of net operating losses.* Pursuant to section 108(b)(2)(A) and paragraph (a) of this section, the net operating loss and the net operating loss carryovers attributable to S1 under the principles of § 1.1502–21(b)(2)(iv) are reduced in the order prescribed by section 108(b)(4)(B). Accordingly, the consolidated net operating loss for Year 3 is reduced by $10, the portion of the consolidated net operating loss for Year 3 attributable to S1, to $40. Then, the consolidated net operating loss carryover from Year 1 is reduced by $20, the portion of that consolidated net operating loss carryover attributable to S1, to $30, and the consolidated net operating loss carryover from Year 2 is reduced by $30, the portion of that consolidated net operating loss carryover attributable to S1, to $40.

(*2*) *Reduction of basis.* Following the reduction of the net operating loss and the net operating loss carryovers attributable to S1, S1 reduces its basis in its assets pursuant to section 1017 and § 1.1017–1. Accordingly, S1 reduces its basis in the stock of S2 by $80, from $80 to $0.

(*3*) *Tiering down of stock basis reduction.* Pursuant to paragraph (a)(3) of this section, for purposes of sections 108 and 1017 and this section, S2 is treated as realizing $80 of excluded COD income. Pursuant to section 108(b)(2)(A) and paragraph (a) of this section, therefore, the net operating loss and net operating loss carryovers attributable to S2 under the principles of § 1.1502–21(b)(2)(iv) are reduced in the order prescribed by section 108(b)(4)(B). Accordingly, the consolidated net operating loss for Year 3 is reduced by an additional $40, the portion of the consolidated net operating loss for Year 3 attributable to S2, to $0. Then, the consolidated net operating loss carryover from Year 1 is reduced by $20, the portion of that consolidated net operating loss carryover attributable to S2, to $10. Then, the consolidated net operating loss carryover from Year 2 is reduced by $10, the portion of that consolidated net operating loss carryover attributable to S2, to $30. S2's remaining $10 of excluded COD income does not reduce consolidated tax attributes attributable to P or S1 under paragraph (a)(4) of this section.

(B) *Reduction of remaining consolidated tax attributes.* Finally, pursuant to paragraph (a)(4) of this section, S1's remaining $30 of excluded COD income reduces the remaining consolidated tax attributes. In particular, the remaining $10 consolidated net operating loss carryover from Year 1 is reduced by $10 to $0, and the remaining $30 consolidated net operating loss carryover from Year 2 is reduced by $20 to $10.

Example 3. (i) *Facts.* P is the common parent of a consolidated group that includes subsidiaries S1, S2, and S3. P owns 100 percent of the stock of S1, S1 owns 100 percent of the stock of S2, and S2 owns 100 percent of the stock of S3. None of P, S1, S2, or S3 had a separate return limitation year prior to Year 1. In Year 1, the P group sustained a $150 consolidated net operating loss. Under the principles of § 1.1502–21(b)(2)(iv), of that amount, $50 was attributable to S2, and $100 was attributable to S3. In Year 2, the P group sustained a $50 consolidated net operating loss. Under the principles of § 1.1502–21(b)(2)(iv), of that amount, $40 was attributable to S1 and $10 was attributable to S2. In Year 3, S1 realized $170 of excluded COD income from the discharge of non-intercompany indebtedness. In that same year, the P group sustained a $50 consolidated net operating loss, of which $10 was attributable to

S1, $20 was attributable to S2, and $20 was attributable to S3 under the principles of § 1.1502–21(b)(2)(iv). At the beginning of Year 4, S1's only asset was the stock of S2, and S2's only asset was the stock of S3 with a value of $10. After the computation of tax imposed for Year 3 and before the application of sections 108 and 1017 and this section, S1's stock of S2 had a basis of $120 and S2's stock of S3 had a basis of $180. In addition, none of S1, S2, and S3 had any liabilities.

(ii) *Analysis*—(A) *Reduction of tax attributes attributable to debtor.* Pursuant to paragraph (a)(2) of this section, the tax attributes attributable to S1 must first be reduced to take into account its excluded COD income in the amount of $170.

(*1*) *Reduction of net operating losses.* Pursuant to section 108(b)(2)(A) and paragraph (a) of this section, the net operating loss and the net operating loss carryovers attributable to S1 under the principles of § 1.1502–21(b)(2)(iv) are reduced in the order prescribed by section 108(b)(4)(B). Accordingly, the consolidated net operating loss for Year 3 is reduced by $10, the portion of the consolidated net operating loss attributable to S1, to $40. Then, the consolidated net operating loss carryover from Year 2 is reduced by $40, the portion of that consolidated net operating loss carryover attributable to S1, to $10.

(*2*) *Reduction of basis.* Following the reduction of the net operating loss and the net operating loss carryovers attributable to S1, S1 reduces its basis in its assets pursuant to section 1017 and § 1.1017–1. Accordingly, S1 reduces its basis in the stock of S2 by $120, from $120 to $0.

(B) *Tiering down of stock basis reduction to S2.* Pursuant to paragraph (a)(3) of this section, for purposes of sections 108 and 1017 and this section, S2 is treated as realizing $120 of excluded COD income. Pursuant to section 108(b)(2)(A) and paragraph (a) of this section, therefore, the net operating loss and net operating loss carryovers attributable to S2 under the principles of § 1.1502–21(b)(2)(iv) are reduced in the order prescribed by section 108(b)(4)(B). Accordingly, the consolidated net operating loss for Year 3 is further reduced by $20, the portion of the consolidated net operating loss attributable to S2, to $20. Then, the consolidated net operating loss carryover from Year 1 is reduced by $50, the portion of that consolidated net operating loss carryover attributable to S2, to $100. Then, the consolidated net operating loss carryover from Year 2 is further reduced by $10, the portion of that consolidated net operating loss carryover attributable to S2, to $0. Following the reduction of the net operating loss and the net operating loss carryovers attributable to S2, S2 reduces its basis in its assets pursuant to section 1017 and § 1.1017–1. Accordingly, S2 reduces its basis in its S3 stock by $40 to $140.

(C) *Tiering down of stock basis reduction to S3.* Pursuant to paragraph (a)(3) of this section, for purposes of sections 108 and 1017 and this section, S3 is treated as realizing $40 of excluded COD income. Pursuant to section 108(b)(2)(A) and paragraph (a) of this section, therefore, the net operating loss and the net operating loss carryovers attributable to S3 under the principles of § 1.1502–21(b)(2)(iv) are reduced in the order prescribed by section 108(b)(4)(B). Accordingly, the consolidated net operating loss for Year 3 is further reduced by $20, the portion of the consolidated net operating loss attributable to S3, to $0. Then, the consolidated net operating loss carryover from Year 1 is reduced by $20, the lesser of the portion of that consolidated net operating loss carryover attributable to S3 and the remaining excluded COD income, to $80.

Example 4. (i) *Facts.* P is the common parent of a consolidated group that includes subsidiaries S1, S2, and S3. P owns 100 percent of the stock of each of S1 and S2. Each of S1 and S2 owns stock of S3 that represents 50 percent of the value of the stock of S3. None of P, S1, S2, or S3 had a separate return limitation year prior to Year 1. In Year 1, the P group sustained a $160 consolidated net operating loss. Under the principles of § 1.1502–21(b)(2)(iv), of that amount, $10 was attributable to P, $50 was attributable to S2, and $100 was attributable to S3. In Year 2, the P group sustained a $110 consolidated net operating loss. Under the principles of § 1.1502–21(b)(2)(iv), of that amount, $40 was attributable to S1 and $70 was attributable to S2. In Year 3, S1 realized $200 of excluded COD income from the discharge of non-intercompany indebtedness, and S2 realized $270 of excluded COD income from the discharge of non-intercompany indebtedness. In that same year, the P group sustained a $50 consolidated net operating loss, of which $10 was attributable to S1, $20 was attributable to S2, and $20 was attributable to S3 under the principles of § 1.1502–21(b)(2)(iv). At the beginning of Year 4, S3 had one asset with a value of $10. After the computation of tax imposed for Year 3 and before the application of sections 108 and 1017 and this section, S1's basis in its S3 stock was $60, S2's basis in its S3 stock was $120, and S3's asset had a basis of $200. In addition, none of S1, S2, and S3 had any liabilities.

(ii) *Analysis*—(A) *Reduction of tax attributes attributable to debtors.* Pursuant to paragraph (b)(1)(i) of this section, the tax attributes attributable to each of S1 and S2 are reduced pursuant to paragraph (a)(2) of this section. Then, pursuant to paragraph (a)(3) of this section, the tax attributes attributable to S3 are reduced so as to reflect a reduction of S1's and S2's basis in the stock of S3. Then, paragraph (a)(4) is applied to reduce additional tax attributes.

(1) *Reduction of net operating losses generally.* Pursuant to section 108(b)(2)(A) and paragraph (a) of this section, the net operating losses and the net operating loss carryovers attributable to S1 and S2 under the principles of §1.1502–21(b)(2)(iv) are reduced in the order prescribed by section 108(b)(4)(B).

(2) *Reduction of net operating losses attributable to S1.* The consolidated net operating loss for Year 3 is reduced by $10, the portion of the consolidated net operating loss attributable to S1, to $40. Then, the consolidated net operating loss carryover from Year 2 is reduced by $40, the portion of that consolidated net operating loss carryover attributable to S1, to $70.

(3) *Reduction of net operating losses attributable to S2.* The consolidated net operating loss for Year 3 is also reduced by $20, the portion of the consolidated net operating loss attributable to S2, to $20. Then, the consolidated net operating loss carryover from Year 1 is reduced by $50, the portion of that consolidated net operating loss carryover attributable to S2, to $110. Then, the consolidated net operating loss carryover from Year 2 is reduced by $70, the portion of that consolidated net operating loss carryover attributable to S2, to $0.

(4) *Reduction of basis.* Following the reduction of the net operating losses and the net operating loss carryovers attributable to S1 and S2, S1 and S2 must reduce their basis in their assets pursuant to section 1017 and §1.1017–1. Accordingly, S1 reduces its basis in the stock of S3 by $60, from $60 to $0, and S2 reduces its basis in the stock of S3 by $120, from $120 to $0.

(B) *Tiering down of basis reduction.* Pursuant to paragraph (a)(3) of this section, for purposes of sections 108 and 1017 and this section, S3 is treated as realizing $180 of excluded COD income. Pursuant to section 108(b)(2)(A) and paragraph (a) of this section, therefore, the net operating loss and the net operating loss carryovers attributable to S3 under the principles of §1.1502–21(b)(2)(iv) are reduced in the order prescribed by section 108(b)(4)(B). Accordingly, the consolidated net operating loss for Year 3 is further reduced by $20, the portion of the consolidated net operating loss attributable to S3, to $0. Then, the consolidated net operating loss carryover from Year 1 is reduced by $100, the portion of that consolidated net operating loss carryover attributable to S3, to $10. Following the reduction of the net operating loss and the net operating loss carryover attributable to S3, S3 reduces its basis in its asset pursuant to section 1017 and §1.1017–1. Accordingly, S3 reduces its basis in its asset by $60, from $200 to $140.

(C) *Reduction of remaining consolidated tax attributes.* Finally, pursuant to paragraph (a)(4) of this section, the remaining $90 of S1's excluded COD income and the remaining $10 of S2's excluded COD income reduce the remaining consolidated tax attributes. In particular, the remaining $10 consolidated net operating loss carryover from Year 1 is reduced by $10 to $0. Because that amount is less than the aggregate amount of remaining excluded COD income, such income is applied on a pro rata basis to reduce the remaining consolidated tax attributes. Accordingly, $9 of S1's remaining excluded COD income and $1 of S2's remaining excluded COD income is applied to reduce the remaining consolidated net operating loss carryover from Year 1. Consequently, of S1's excluded COD income of $200, only $119 is applied to reduce tax attributes, and, of S2's excluded COD income of $270, only $261 is applied to reduce tax attributes.

Example 5. (i) *Facts.* P is the common parent of a consolidated group that includes subsidiaries S1, S2, and S3. P owns 100 percent of the stock of S1 and S2, and S1 owns 100 percent of the stock of S3. None of P, S1, S2, or S3 has a separate return limitation year prior to Year 1. In Year 1, the P group sustained a $90 consolidated net operating loss. Under the principles of §1.1502–21(b)(2)(iv), of that amount, $10 was attributable to P, $15 was attributable to S1, $20 was attributable to S2, and $45 was attributable to S3. On January 1 of Year 2, P realized $140 of excluded COD income from the discharge of non-intercompany indebtedness. On December 31 of Year 2, S1 issued stock representing 50 percent of the vote and value of its outstanding stock to a person that was not a member of the group. As a result of the issuance of stock, S1 and S3 ceased to be members of the P group. For the consolidated return year of Year 2, the P group sustained a $60 consolidated net operating loss, of which $5 was attributable to S1, $40 was attributable to S2, and $15 was attributable to S3 under the principles of §1.1502–21(b)(2)(iv). As of the beginning of Year 3, P's only assets were the stock of S1 and S2, S1's sole asset was the stock of S3, S2 had Asset A with a value of $10, and S3 had Asset B with a value of $10. After the computation of tax imposed for Year 2 and before the application of sections 108 and 1017 and this section, P had a $80 basis in the S1 stock and a $50 basis in the S2 stock, S1 had a $80 basis in the S3 stock, and Asset A and B each had a basis of $10. In addition, none of P, S1, S2, and S3 had any liabilities.

(ii) *Analysis.* Pursuant to paragraph (a)(2) of this section, the tax attributes attributable to P must first be reduced to take into account its excluded COD income in the amount of $140.

(A) *Reduction of net operating losses.* Pursuant to section 108(b)(2)(A) and paragraph (a) of this section, the net operating loss and the net operating loss carryover attributable to P under the principles of §1.1502–

21(b)(2)(iv) are reduced in the order prescribed by section 108(b)(4)(B). Accordingly, the consolidated net operating loss carryover from Year 1 is reduced by $10, the portion of that consolidated net operating loss carryover attributable to P, to $80.

(B) *Reduction of basis.* Following the reduction of the net operating loss and the net operating loss carryover attributable to P, P reduces its basis in its assets pursuant to section 1017 and § 1.1017–1. Accordingly, P reduces its basis in the stock of S1 by $80, from $80 to $0, and its basis in the stock of S2 by $50, from $50 to $0.

(C) *Tiering down of stock basis reduction to S1.* Pursuant to paragraph (a)(3) of this section, for purposes of sections 108 and 1017 and this section, S1 is treated as realizing $80 of excluded COD income, despite the fact that it ceases to be a member of the group at the end of the day on December 31 of Year 2. Pursuant to section 108(b)(2)(A) and paragraph (a) of this section, therefore, the net operating loss and net operating loss carryovers attributable to S1 under the principles of § 1.1502–21(b)(2)(iv) are reduced in the order prescribed by section 108(b)(4)(B). Accordingly, the consolidated net operating loss for Year 2 is reduced by $5, the portion of the consolidated net operating loss for Year 2 attributable to S1, to $55. Then, the consolidated net operating loss carryover from Year 1 is reduced by an additional $15, the portion of that consolidated net operating loss carryover attributable to S1, to $65. Following the reduction of the net operating loss and the net operating loss carryover attributable to S1, S1 reduces its basis in its assets pursuant to section 1017 and § 1.1017–1. Accordingly, S1 reduces its basis in the stock of S3 by $60, from $80 to $20.

(D) *Tiering down of stock basis reduction to S2.* Pursuant to paragraph (a)(3) of this section, for purposes of sections 108 and 1017 and this section, S2 is treated as realizing $50 of excluded COD income. Pursuant to section 108(b)(2)(A) and paragraph (a) of this section, therefore, the net operating loss and net operating loss carryovers attributable to S2 under the principles of § 1.1502–21(b)(2)(iv) are reduced in the order prescribed by section 108(b)(4)(B). Accordingly, the consolidated net operating loss for Year 2 is reduced by an additional $40, the portion of the consolidated net operating loss for Year 2 attributable to S2, to $15. Then, the consolidated net operating loss carryover from Year 1 is reduced by an additional $10, a portion of the consolidated net operating loss carryover attributable to S2, to $55.

(E) *Tiering down of stock basis reduction to S3.* Pursuant to paragraph (a)(3) of this section, for purposes of sections 108 and 1017 and this section, S3 is treated as realizing $60 of excluded COD income (by reason of S1's reduction in its basis of its S3 stock). Pursuant to section 108(b)(2)(A) and paragraph (a) of this section, therefore, the net operating loss and net operating loss carryovers attributable to S3 under the principles of § 1.1502–21(b)(2)(iv) are reduced in the order prescribed by section 108(b)(4)(B). Accordingly, the consolidated net operating loss for Year 2 is reduced by an additional $15, the portion of the consolidated net operating loss for Year 2 attributable to S3, to $0. Then, the consolidated net operating loss carryover from Year 1 is reduced by an additional $45, the portion of that consolidated net operating loss carryover attributable to S3, to $10.

Example 6. (i) *Facts.* P1 is the common parent of a consolidated group that includes subsidiaries S1, S2, and S3. P1 owns 100 percent of the stock of S1 and S2. S1 owns 100 percent of the stock of S3. None of P1, S1, S2, or S3 has a separate return limitation year prior to Year 1. In Year 1, the P1 group sustained a $120 consolidated net operating loss. Under the principles of § 1.1502–21(b)(2)(iv), of that amount, $40 was attributable to P1, $35 was attributable to S1, $30 was attributable to S2, and $15 was attributable to S3. On January 1 of Year 2, S3 realized $65 of excluded COD income from the discharge of non-intercompany indebtedness. On June 30 of Year 2, S3 issued stock representing 80 percent of the vote and value of its outstanding stock to P2, the common parent of another group. As a result of the issuance of stock, S3 ceased to be a member of the P1 group and became a member of the P2 group. For the consolidated return year of Year 2, the P1 group sustained a $50 consolidated net operating loss, of which $5 was attributable to S1, $40 was attributable to S2, and $5 was attributable to S3 under the principles of § 1.1502–21(b)(2)(iv). As of the beginning of its taxable year beginning on July 1 of Year 2, S3's sole asset was Asset A with a $10 value. After the computation of tax imposed for Year 2 on the P1 group and before the application of sections 108 and 1017 and this section and the computation of tax imposed for Year 2 on the P2 group, Asset A had a basis of $0. In addition, S3 had no liabilities. On January 1 of Year 3, P1 sold all of its stock of S1.

(ii) *Analysis*—(A) *Reduction of tax attributes attributable to debtor.* Pursuant to paragraph (a)(2) of this section, the tax attributes attributable to S3 must first be reduced to take into account its excluded COD income in the amount of $65. Pursuant to section 108(b)(2)(A) and paragraph (a) of this section, the net operating loss and the net operating loss carryover attributable to S3 under the principles of § 1.1502–21(b)(2)(iv) are reduced in the order prescribed by section 108(b)(4)(B). Accordingly, the consolidated net operating loss for Year 2 is reduced by $5, the portion of the consolidated net operating loss for Year 2 attributable to S3, to $45. Then, the consolidated net operating loss carryover from Year 1 is reduced by $15, the

portion of that consolidated net operating loss carryover attributable to S3, to $105.

(B) *Reduction of remaining consolidated tax attributes.* Pursuant to paragraphs (a)(4) and (b)(8) of this section, S3's remaining $45 of excluded COD income reduces the remaining consolidated tax attributes in the P1 group. In particular, the remaining $45 consolidated net operating loss for Year 2 is reduced by an additional $45 to $0.

(C) *Basis Adjustments.* For purposes of computing P1's gain or loss on the sale of the S1 stock in Year 3, P1's basis in its S1 stock will reflect a net positive adjustment of $40, which is the excess of the amount of S3's excluded COD income that is applied to reduce attributes ($65) over the reduction of S1's and S3's attributes in respect of such excluded COD income ($25).

Example 7. (i) *Facts.* P is the common parent of a consolidated group that includes subsidiaries S1 and S2. P owns 100 percent of the stock of S1, and S1 owns 100 percent of the stock of S2. None of P, S1, or S2 has a separate return limitation year prior to Year 1. In Year 1, the P group sustained a $50 consolidated net operating loss. Under the principles of §1.1502–21(b)(2)(iv), of that amount, $10 was attributable to P, $20 was attributable to S1, and $20 was attributable to S2. On January 1 of Year 2, S1 realized $55 of excluded COD income from the discharge of non-intercompany indebtedness. On June 30 of Year 2, P transferred all of its assets to S1 in a transaction to which section 381(a) applied. As a result of that transaction, pursuant to §1.1502–75(d)(2)(ii), S1 succeeded P as the common parent of the group. Pursuant to §1.1502–75(d)(2)(iii), S1's taxable year closed on the date of the acquisition. However, P's taxable year did not close. On the consolidated return for Year 2, the group sustained a $50 consolidated net operating loss. Under the principles of §1.1502–21(b)(2)(iv), of that amount, $10 was attributable to S1 for its taxable year that ended on June 30, $15 was attributable to S1 as the successor of P, and $25 was attributable to S2.

(ii) *Analysis.* Pursuant to paragraph (a)(2) of this section, the tax attributes attributable to S1 must first be reduced to take into account its excluded COD income in the amount of $55. For this purpose, S1's attributes that remain after the determination of tax for the group for Year 2 are subject to reduction. Pursuant to section 108(b)(2)(A) and paragraph (a) of this section, the net operating loss and the net operating loss carryover attributable to S1 under the principles of §1.1502–21(b)(2)(iv) are reduced. Accordingly, the consolidated net operating loss for Year 2 is reduced by $25, the portion of the consolidated net operating loss for Year 2 attributable to S1, to $25. Then, the consolidated net operating loss carryover from Year 1 is reduced by $30, the portion of that consolidated net operating loss carryover attributable to S1 (which includes the portion attributable to P), to $20.

(d) *Effective dates.* This section applies to discharges of indebtedness that occur after March 21, 2005. Groups, however, may apply this section in whole, but not in part, to discharges of indebtedness that occur on or before March 21, 2005, and after August 29, 2003. For discharges of indebtedness occurring on or before March 21, 2005, and after August 29, 2003, with respect to which a group chooses not to apply this section, see §1.1502–28T as contained in 26 CFR part 1 revised as of April 1, 2004. Furthermore, groups may apply paragraph (b)(4) of this section to discharges of indebtedness that occur on or before August 29, 2003, in cases in which section 1017(b)(3)(D) was applied.

[T.D. 9192, 70 FR 14404, Mar. 22, 2005]

BASIS, STOCK OWNERSHIP, AND EARNINGS AND PROFITS RULES

§1.1502–30 Stock basis after certain triangular reorganizations.

(a) *Scope.* This section provides rules for determining the basis of the stock of an acquiring corporation as a result of a triangular reorganization. The definitions and nomenclature contained in §1.358–6 apply to this section.

(b) *General rules*—(1) *Forward triangular merger, triangular C reorganization, or triangular B reorganization. P* adjusts its basis in the stock of S as a result of a forward triangular merger, triangular C reorganization, or triangular B reorganization under §1.358–6(c) and (d), except that §1.358–6 (c)(1)(ii) and (d)(2) do not apply. Instead, *P* adjusts such basis by taking into account the full amount of—

(i) *T* liabilities assumed by *S* or the amount of liabilities to which the *T* assets acquired by *S* are subject, and

(ii) The fair market value of any consideration not provided by *P* pursuant to the plan of reorganization.

(2) *Reverse triangular merger.* If *P* adjusts its basis in the *T* stock acquired as a result of a reverse triangular merger under §1.358–6 (c)(2)(i) and (d), §1.358–6 (c)(1)(ii) and (d)(2) do not apply. Instead, *P* adjusts such basis by taking into account the full amount of—

(i) *T* liabilities deemed assumed by *S* or the amount of liabilities to which the *T* assets deemed acquired by *S* are subject, and

(ii) The fair market value of any consideration not provided by *P* pursuant to the plan of reorganization.

(3) *Excess loss accounts.* Negative adjustments under this section may exceed *P*'s basis in its *S* or *T* stock. The resulting negative amount is *P*'s excess loss account in its *S* or *T* stock. See § 1.1502–19 for rules treating excess loss accounts as negative basis, and treating references to stock basis as including references to excess loss accounts.

(4) *Application of other rules of law.* The rules for this section are in addition to other rules of law. See § 1.1502–80(d) for the non-application of section 357(c) to *P*.

(5) *Examples.* The rules of this paragraph (b) are illustrated by the following examples. For purposes of these examples, *P*, *S*, and *T* are domestic corporations, *P* and *S* file consolidated returns, *P* owns all of the only class of *S* stock, the *P* stock exchanged in the transaction satisfies the requirements of the applicable triangular reorganization provisions, the facts set forth the only corporate activity, and tax liabilities are disregarded.

Example 1. Liabilities. (a) *Facts. T* has assets with an aggregate basis of $60 and fair market value of $100. *T*'s assets are subject to $70 of liabilities. Pursuant to a plan, *P* forms *S* with $5 of cash (which S retains), and *T* merges into *S*. In the merger, the *T* shareholders receive *P* stock worth $30 in exchange for their *T* stock. The transaction is a reorganization to which sections 368 (a)(1)(A) and (a)(2)(D) apply.

(b) *Basis adjustment.* Under § 1.358–6, *P* adjusts its $5 basis in the *S* stock as if *P* had acquired the *T* assets with a carryover basis under section 362 and transferred these assets to *S* in a transaction in which *P* determines its basis in the *S* stock under section 358. Under the rules of this section, the limitation described in § 1.358–6(c)(1)(ii) does not apply. Thus, *P* adjusts its basis in the *S* stock by –$10 (the aggregate adjusted basis of *T*'s assets decreased by the amount of liabilities to which the *T* assets are subject). Consequently, as a result of the reorganization, *P* has an excess loss account of $5 in its *S* stock.

Example 2. Consideration not provided by P. (a) *Facts. T* has assets with an aggregate basis of $10 and fair market value of $100 and no liabilities. *S* is an operating company with substantial assets that has been in existence for several years. *P* has a $5 basis in its *S* stock. Pursuant to a plan, *T* merges into *S* and the *T* shareholders receive $70 of *P* stock provided by *P* pursuant to the plan of reorganization and $30 of cash provided by *S* in exchange for their *T* stock. The transaction is a reorganization to which sections 368 (a)(1)(A) and (a)(2)(D) apply.

(b) *Basis adjustment.* Under § 1.358–6, *P* adjusts its $5 basis in the *S* stock as if *P* had acquired the *T* assets with a carryover basis under section 362 and transferred these assets to *S* in a transaction in which *P* determines its basis in the *S* stock under section 358. Under the rules of this section, the limitation described in § 1.358–6(d)(2) does not apply. Thus, *P* adjusts its basis in the *S* stock by –$20 (the aggregate adjusted basis of *T*'s assets decreased by the fair market value of the consideration provided by *S*). As a result of the reorganization, *P* has an excess loss account of $15 in its *S* stock.

(c) *Appreciated asset.* The facts are the same as in paragraph (a) of this *Example 2*, except that in the reorganization *S* provides an asset with a $20 adjusted basis and $30 fair market value instead of $30 cash. The basis is adjusted in the same manner as in paragraph (b) of this *Example 2*. In addition, because *S* recognizes a $10 gain from the asset under section 1001, *P*'s basis in its *S* stock is increased under § 1.1502–32(b) by *S*'s $10 gain. Consequently, as a result of the reorganization, *P* has an excess loss account of $5 in its *S* stock. (The results would be the same if the appreciated asset provided by *S* was *P* stock with respect to which *S* recognized gain. See § 1.1032–2(c)).

Example 3. Reverse triangular merger. (a) *Facts. T* has assets with an aggregate basis of $60 and fair market value of $100. *T*'s assets are subject to $70 of liabilities. *P* owns all of the only class of *S* stock. *P* has a $5 basis in its *S* stock. Pursuant to a plan, *S* merges into *T* with *T* surviving. In the merger, the *T* shareholders exchange their *T* stock for $2 cash from *P* and $28 worth of *P* stock provided by *P* pursuant to the plan. The transaction is a reorganization to which sections 368 (a)(1)(A) and (a)(2)(E) apply.

(b) *Basis adjustment.* Under § 1.358–6, *P*'s basis in the *T* stock acquired equals its $5 basis in its *S* stock immediately before the transaction adjusted by the $60 basis in the *T* assets deemed transferred, and the $70 of liabilities to which the *T* assets are subject. Under the rules of this section, the limitation described in § 1.358–6(c)(1)(ii) does not apply. Consequently, *P* has an excess loss account of $5 in its *T* stock as a result of the transaction.

(c) *Effective date.* This section applies to reorganizations occurring on or after December 21, 1995.

[T.D. 8648, 60 FR 66082, Dec. 21, 1995]

§ 1.1502–31 Stock basis after a group structure change.

(a) *In general*—(1) *Overview.* If one corporation (P) succeeds another corporation (T) under the principles of § 1.1502–75(d) (2) or (3) as the common parent of a consolidated group in a group structure change, the basis of members in the stock of the former common parent (or the stock of a successor) is adjusted or determined under this section. See § 1.1502–33(f)(1) for the definition of group structure change. For example, if P owns all of the stock of another corporation (S), and T merges into S in a group structure change that is a reorganization described in section 368(a)(2)(D) in which P becomes the common parent of the T group, P's basis in S's stock must be adjusted to reflect the change in S's assets and liabilities. The rules of this section coordinate with the earnings and profits adjustments required under § 1.1502–33(f)(1), generally conforming the results of transactions in which the T group continues under § 1.1502–75 with P as the common parent. By preserving in P the relationship between T's earnings and profits and asset basis, these adjustments limit possible distortions under section 1502 (e.g., in the deconsolidation rules for earnings and profits under § 1.1502–33(e), and the continued filing requirements under § 1.1502–75(a)). This section applies whether or not T continues to exist after the group structure change.

(2) *Application of other rules of law.* The rules of this section are in addition to other rules of law. The provisions of this section and other rules of law must not have the effect of duplicating an amount in P's basis in S's stock.

(b) *General rules.* Except as otherwise provided in this section—

(1) *Asset acquisitions.* If a corporation acquires the former common parent's assets (and any liabilities assumed or to which the assets are subject) in a group structure change, the basis of members in the stock of the acquiring corporation is adjusted immediately after the group structure change to reflect the acquiring corporation's allocable share of the former common parent's net asset basis as determined under paragraph (c) of this section. For example, if S acquires all of T's assets in a group structure change that is a reorganization described in section 368(a)(2)(D), P's basis in S's stock is adjusted to reflect T's net asset basis. If P owned some of T's stock before the group structure change, the results would be the same because P's basis in the T stock is not taken into account in determining P's basis in S's stock. If T's net asset basis is a negative amount, it reduces P's basis in S's stock and, if the reduction exceeds P's basis in S's stock, the excess is P's excess loss account in S's stock. See § 1.1502–19 for rules treating P's excess loss account as negative basis, and treating a reference to P's basis in S's stock as including an excess loss account.

(2) *Stock acquisitions.* If a corporation acquires stock of the former common parent in a group structure change, the basis of the members in the former common parent's stock immediately after the group structure change (including any stock of the former common parent owned before the group structure change) that is, or would otherwise be, transferred basis property is redetermined in accordance with the results for an asset acquisition described in paragraph (b)(1) of this section. For example, if all of T's stock is contributed to P in a group structure change to which section 351 applies, P's basis in T's stock is T's net asset basis, rather than the amount determined under section 362. Similarly, if S merges into T in a group structure change described in section 368(a)(2)(E) and P acquires all of the T stock, P's basis in T's stock is the basis that P would have in S's stock under paragraph (b)(1) of this section if T had merged into S in a group structure change described in section 368(a)(2)(D).

(c) *Net asset basis.* The former common parent's net asset basis is the basis it would have in the stock of a newly formed subsidiary, if—

(1) The former common parent transferred its assets (and any liabilities assumed or to which the assets are subject) to the subsidiary in a transaction to which section 351 applies;

(2) The former common parent and the subsidiary were members of the same consolidated group (see §1.1502–80(d) for the non-application of section 357(c) to the transfer); and

(3) The asset basis taken into account is each asset's basis immediately after the group structure change (e.g., taking into account any income or gain recognized in the group structure change and reflected in the asset's basis).

(d) *Additional adjustments.* In addition to the adjustments in paragraph (b) of this section, the following adjustments are made:

(1) *Consideration not provided by P.* The basis is reduced to reflect the fair market value of any consideration not provided by the member. For example, if S acquires T's assets in a group structure change described in section 368(a)(2)(D), and S provides an appreciated asset (e.g., stock of P) as partial consideration in the transaction, P's basis in S's stock is reduced by the fair market value of the asset.

(2) *Allocable share*—(i) *Asset acquisitions.* If a corporation receives less than all of the former common parent's assets and liabilities in the group structure change, the former common parent's net asset basis taken into account under paragraph (b)(1) of this section is adjusted accordingly.

(ii) *Stock acquisitions.* If less than all of the former common parent's stock is subject to the redetermination described in paragraph (b)(2) of this section, the percentage of the former common parent's net asset basis taken into account in the redetermination equals the percentage (by fair market value) of the former common parent's stock subject to the redetermination. For example, if P owns less than all of the former common parent's stock immediately after the group structure change and such stock would otherwise be transferred basis property, only an allocable part of the basis determined under this section is reflected in the shares owned by P (and the amount allocable to shares owned by nonmembers has no effect on the basis of their shares). Alternatively, if P acquired 10 percent of the former common parent's stock in a transaction in which the stock basis was determined by P's cost, and P later acquires the remaining 90 percent of the former common parent's stock in a separate transaction that is described in paragraph (b)(2) of this section, P retains its cost basis in its original stock and the basis of P's newly acquired shares reflects only an allocable part of the former common parent's net asset basis.

(3) *Allocation among shares of stock.* The basis determined under this section is allocated among shares under the principles of section 358. For example, if P owns multiple classes of the former common parent's stock immediately after the group structure change, only an allocable part of the basis determined under this section is reflected in the basis of each share. See §1.1502–19(d), for special allocations with respect to excess loss accounts.

(4) *Higher-tier members.* To the extent that the former common parent is owned by members other than the new common parent, the basis of members in the stock of all subsidiaries owning, directly or indirectly, in whole or in part, an interest in the former common parent's assets or liabilities is adjusted in accordance with the principles of this section. The adjustments are applied in the order of the tiers, from the lowest to the highest.

(e) *Waiver of loss carryovers of former common parent*—(1) *General rule.* An irrevocable election may be made to treat all or any portion of a loss carryover attributable to the common parent as expiring for all Federal income tax purposes immediately before the group structure change. Thus, if the loss carryover is treated as expiring under the election, it will not result in a negative adjustment to the basis of P's stock under §1.1502–32(b).

(2) *Election.* The election described in this paragraph (e) must be made in a separate statement entitled ''ELECTION TO TREAT LOSS CARRYOVER AS EXPIRING UNDER §1.1502–31(e).'' The statement must be filed with the consolidated group's return for the year that includes the group structure change, and it must be signed by the

former and the new common parent. The statement must identify the amount of each loss carryover deemed to expire (or the amount of each loss carryover deemed not to expire, with any balance of any loss carryovers being deemed to expire).

(f) *Predecessors and successors.* For purposes of this section, any reference to a corporation includes a reference to a successor or predecessor as the context may require. See § 1.1502–32(f) for definitions of predecessor and successor.

(g) *Examples.* For purposes of the examples in this section, unless otherwise stated, all corporations have only one class of stock outstanding, the tax year of all persons is the calendar year, all persons use the accrual method of accounting, the facts set forth the only corporate activity, all transactions are between unrelated persons, and tax liabilities are disregarded. The principles of this section are illustrated by the following examples:

Example 1. Forward triangular merger. (i) *Facts.* P is the common parent of one group and T is the common parent of another. T has assets with an aggregate basis of $60 and fair market value of $100 and no liabilities. T's shareholders have an aggregate basis of $50 in T's stock. In Year 1, pursuant to a plan, P forms S and T merges into S with the T shareholders receiving $100 of P stock in exchange for their T stock. The transaction is a reorganization described in section 368(a)(2)(D). The transaction is also a reverse acquisition under § 1.1502–75(d)(3) because the T shareholders, as a result of owning T's stock, own more than 50% of the value of P's stock immediately after the transaction. Thus, the transaction is a group structure change under § 1.1502–33(f)(1), and P's earnings and profits are adjusted to reflect T's earnings and profits immediately before T ceases to be the common parent of the T group.

(ii) *Analysis.* Under paragraph (b)(1) of this section, P's basis in S's stock is adjusted to reflect T's net asset basis. Under paragraph (c) of this section, T's net asset basis is $60, the basis T would have in the stock of a subsidiary under section 358 if T had transferred all of its assets and liabilities to the subsidiary in a transaction to which section 351 applies. Thus, P has a $60 basis in S's stock.

(iii) *Pre-existing S.* The facts are the same as in paragraph (i) of this *Example 1,* except that P has owned the stock of S for several years and P has a $50 basis in the S stock before the merger with T. Under paragraph (b)(1) of this section, P's $50 basis in S's stock is adjusted to reflect T's net asset basis. Thus, P's basis in S's stock is $110 ($50 plus $60).

(iv) *Excess loss account included in former common parent's net asset basis.* The facts are the same as in paragraph (i) of this *Example 1,* except that T has two assets, an operating asset with an $80 basis and $90 fair market value, and stock of a subsidiary with a $20 excess loss account and $10 fair market value. Under paragraph (c) of this section, T's net asset basis is $60 ($80 minus $20). *See* sections 351 and 358, and § 1.1502–19. Consequently, P has a $60 basis in S's stock. Under section 362 and § 1.1502–19, S has an $80 basis in the operating asset and a $20 excess loss account in the stock of the subsidiary.

(v) *Liabilities in excess of basis.* The facts are the same as in paragraph (i) of this *Example 1,* except that T's assets have a fair market value of $170 (and $60 basis) and are subject to $70 of liabilities. Under paragraph (c) of this section, T's net asset basis is negative $10 ($60 minus $70). *See* sections 351 and 358, and §§ 1.1502–19 and 1.1502–80(d). Thus, P has a $10 excess loss account in S's stock. Under section 362, S has a $60 basis in its assets (which are subject to $70 of liabilities). (Under paragraph (a)(2) of this section, because the liabilities are taken into account in determining net asset basis under paragraph (c) of this section, the liabilities are not also taken into account as consideration not provided by P under paragraph (d)(1) of this section.)

(vi) *Consideration provided by S.* The facts are the same as in paragraph (i) of this *Example 1,* except that P forms S with a $100 contribution at the beginning of Year 1, and during Year 6, pursuant to a plan, S purchases $100 of P stock and T merges into S with the T shareholders receiving P stock in exchange for their T stock. Under paragraph (b)(1) of this section, P's $100 basis in S's stock is increased by $60 to reflect T's net asset basis. Under paragraph (d)(1) of this section, P's basis in S's stock is decreased by $100 (the fair market value of the P stock) because the P stock purchased by S and used in the transaction is consideration not provided by P.

(vii) *Appreciated asset provided by S.* The facts are the same as in paragraph (i) of this *Example 1,* except that P has owned the stock of S for several years, and the shareholders of T receive $60 of P stock and an asset of S with a $30 adjusted basis and $40 fair market value. S recognizes a $10 gain from the asset under section 1001. Under paragraph (b)(1) of this section, P's basis in S's stock is increased by $60 to reflect T's net asset basis. Under paragraph (d)(1) of this section, P's basis in S's stock is decreased by $40 (the fair market value of the asset provided by S). In addition, P's basis in S's stock is increased under § 1.1502–32(b) by S's $10 gain.

(viii) *Depreciated asset provided by S.* The facts are the same as in paragraph (i) of this *Example 1,* except that P has owned the stock of S for several years, and the shareholders of T receive $60 of P stock and an asset of S with a $50 adjusted basis and $40 fair market value. S recognizes a $10 loss from the asset under section 1001. Under paragraph (b)(1) of this section, P's basis in S's stock is increased by $60 to reflect T's net asset basis. Under paragraph (d)(1) of this section, P's basis in S's stock is decreased by $40 (the fair market value of the asset provided by S). In addition, S's $10 loss is taken into account under §1.1502–32(b) in determining P's basis adjustments under that section.

Example 2. Stock acquisition. (i) *Facts.* P is the common parent of one group and T is the common parent of another. T has assets with an aggregate basis of $60 and fair market value of $100 and no liabilities. T's shareholders have an aggregate basis of $50 in T's stock. Pursuant to a plan, P forms S and S acquires all of T's stock in exchange for P stock in a transaction described in section 368(a)(1)(B). The transaction is also a reverse acquisition under §1.1502–75(d)(3). Thus, the transaction is a group structure change under §1.1502–33(f)(1), and the earnings and profits of P and S are adjusted to reflect T's earnings and profits immediately before T ceases to be the common parent of the T group.

(ii) *Analysis.* Under paragraph (d)(4) of this section, although S is not the new common parent of the T group, adjustments must be made to S's basis in T's stock in accordance with the principles of this section. Although S's basis in T's stock would ordinarily be determined under section 362 by reference to the basis of T's shareholders in T's stock immediately before the group structure change, under the principles of paragraph (b)(2) of this section, S's basis in T's stock is determined by reference to T's net asset basis. Thus, S's basis in T's stock is $60.

(iii) *Higher-tier adjustments.* Under paragraph (d)(4) of this section, P's basis in S's stock is increased by $60 (to be consistent with the adjustment to S's basis in T's stock).

(iv) *Cross ownership.* The facts are the same as in paragraph (i) of this *Example 2,* except S purchased 10% of T's stock from an unrelated person for cash. In an unrelated transaction, S acquires the remaining 90% of T's stock in exchange for P stock. S's basis in the initial 10% of T's stock is not redetermined under this section. However, S's basis in the additional 90% of T's stock is redetermined under this section. S's basis in that stock is adjusted to $54 (90% of T's net asset basis).

(v) *Allocable share.* The facts are the same as in paragraph (i) of this *Example 2,* except that P owns only 90% of S's stock immediately after the group structure change. S's basis in T's stock is the same as in paragraph (ii) of this *Example 2.* Under paragraph (d)(2) of this section, P's basis in its S stock is increased by $54 (90% of S's $60 adjustment).

Example 3. Taxable stock acquisition. (i) *Facts.* P is the common parent of one group and T is the common parent of another. T has assets with an aggregate basis of $60 and fair market value of $100 and no liabilities. T's shareholders have an aggregate basis of $50 in T's stock. Pursuant to a plan, P acquires all of T's stock in exchange for $70 of P's stock and $30 in a transaction that is a group structure change under §1.1502–33(f)(1). P's acquired T stock is not transferred basis property. (Because of P's use of cash, the acquisition is not a transaction described in section 368(a)(1)(B).)

(ii) *Analysis.* The rules of this section do not apply to determine P's basis in T's stock. Therefore, P's basis in T's stock is $100.

(h) *Effective dates*—(1) *General rule.* This section applies to group structure changes that occur after April 26, 2004. However, a group may apply this section to group structure changes that occurred on or before April 26, 2004, and in consolidated return years beginning on or after January 1, 1995.

(2) *Prior law.* For group structure changes that occur on or before April 26, 2004, and in consolidated return years beginning on or after January 1, 1995, with respect to which the group does not elect to apply the provisions of this section, see §1.1502–31 as contained in the 26 CFR part 1 edition revised as of April 1, 2003. For group structure changes that occur in consolidated return years beginning before January 1, 1995, see §1.1502–31T as contained in the 26 CFR part 1 edition revised as of April 1, 1994.

[T.D. 8560, 59 FR 41683, Aug. 15, 1994, as amended by T.D. 9122, 69 FR 22400, Apr. 26, 2004]

§1.1502–32 Investment adjustments.

(a) *In general*—(1) *Purpose.* This section provides rules for adjusting the basis of the stock of a subsidiary (S) owned by another member (P). These rules modify the determination of P's basis in S's stock under applicable rules of law by adjusting P's basis to reflect S's distributions and S's items of income, gain, deduction, and loss taken into account for the period that S is a member of the consolidated group. The purpose of the adjustments

is to treat P and S as a single entity so that consolidated taxable income reflects the group's income. For example, if P forms S with a $100 contribution, and S takes into account $10 of income, P's $100 basis in S's stock under section 358 is increased by $10 under this section to prevent S's income from being taken into account a second time on P's disposition of S's stock. Comparable adjustments are made for tax-exempt income and noncapital, nondeductible expenses that S takes into account, to preserve their treatment under the Internal Revenue Code.

(2) *Application of other rules of law.* The rules of this section are in addition to other rules of law. See, e.g., section 358 (basis determinations for distributees), section 1016 (adjustments to basis), § 1.1502–11(b) (limitations on the use of losses), § 1.1502–19 (treatment of excess loss accounts), § 1.1502–31 (basis after a group structure change), and § 1.1502–35 (additional rules relating to stock loss, including losses attributable to worthlessness and certain dispositions not followed by a separate return year). P's basis in S's stock must not be adjusted under this section and other rules of law in a manner that has the effect of duplicating an adjustment. For example, if pursuant to § 1.1502–35(c)(3) and paragraph (b)(3)(iii)(C) of this section the basis in stock is reduced to take into account a loss suspended under § 1.1502–35(c)(1), such basis shall not be further reduced to take into account such loss, or a portion of such loss, if any, that is later allowed pursuant to § 1.1502–35(c)(5). See also paragraph (h)(5) of this section for basis reductions applicable to certain former subsidiaries.

(3) *Overview*—(i) *In general.* The amount of the stock basis adjustments and their timing are determined under paragraph (b) of this section. Under paragraph (c) of this section, the amount of the adjustment is allocated among the shares of S's stock. Paragraphs (d) through (g) of this section provide definitions, an anti-avoidance rule, successor rules, and recordkeeping requirements.

(ii) *Excess loss account.* Negative adjustments under this section may exceed P's basis in S's stock. The resulting negative amount is P's excess loss account in S's stock. See § 1.1502–19 for rules treating excess loss accounts as negative basis, and treating references to stock basis as including references to excess loss accounts.

(iii) *Tiering up of adjustments.* The adjustments to S's stock under this section are taken into account in determining adjustments to higher-tier stock. The adjustments are applied in the order of the tiers, from the lowest to the highest. For example, if P is also a subsidiary, P's adjustment to S's stock is taken into account in determining the adjustments to stock of P owned by other members.

(b) *Stock basis adjustments*—(1) *Timing of adjustments*—(i) *In general.* Adjustments under this section are made as of the close of each consolidated return year, and as of any other time (an interim adjustment) if a determination at that time is necessary to determine a tax liability of any person. For example, adjustments are made as of P's sale of S's stock in order to measure P's gain or loss from the sale, and if P's interest in S's stock is not uniform throughout the year (e.g., because P disposes of a portion of its S stock, or S issues additional shares to another person), the adjustments under this section are made by taking into account the varying interests. An interim adjustment may be necessary even if tax liability is not affected until a later time. For example, if P sells only 50% of S's stock and S becomes a nonmember, adjustments must be made for the retained stock as of the disposition (whether or not P has an excess loss account in that stock). Similarly, if S liquidates during a consolidated return year, adjustments must be made as of the liquidation (even if the liquidation is tax free under section 332).

(ii) *Special rule for discharge of indebtedness income.* Adjustments under this section resulting from the realization of discharge of indebtedness income of a member that is excluded from gross income under section 108(a) (excluded COD income) and from the reduction of attributes in respect thereof pursuant to sections 108 and 1017 and § 1.1502–28 (including reductions in the basis of property) when a member (the departing member) ceases to be a member of

the group on or prior to the last day of the consolidated return year that includes the date the excluded COD income is realized are made immediately after the determination of tax for the group for the taxable year during which the excluded COD income is realized (and any prior years) and are effective immediately before the beginning of the taxable year of the departing member following the taxable year during which the excluded COD income is realized. Such adjustments when a corporation (the new member) is not a member of the group on the last day of the consolidated return year that includes the date the excluded COD income is realized but is a member of the group at the beginning of the following consolidated return year are also made immediately after the determination of tax for the group for the taxable year during which the excluded COD income is realized (and any prior years) and are effective immediately before the beginning of the taxable year of the new member following the taxable year during which the excluded COD income is realized. If the new member was a member of another group immediately before it became a member of the group, such adjustments are treated as occurring immediately after it ceases to be a member of the prior group.

(iii) *Allocation of items.* If §1.1502–76(b) applies to S for purposes of an adjustment before the close of the group's consolidated return year, the amount of the adjustment is determined under that section. If §1.1502–76(b) does not apply to the interim adjustment, the adjustment is determined under the principles of §1.1502–76(b), consistently applied, and ratable allocation under the principles of §1.1502–76(b)(2)(ii) or (iii) may be used without filing an election under §1.1502–76(b)(2). The principles would apply, for example, if P becomes a nonmember but S remains a member.

(2) *Amount of adjustments.* P's basis in S's stock is increased by positive adjustments and decreased by negative adjustments under this paragraph (b)(2). The amount of the adjustment, determined as of the time of the adjustment, is the net amount of S's—

(i) Taxable income or loss;

(ii) Tax-exempt income;

(iii) Noncapital, nondeductible expenses; and

(iv) Distributions with respect to S's stock.

(3) *Operating rules.* For purposes of determining P's adjustments to the basis of S's stock under paragraph (b)(2) of this section—

(i) *Taxable income or loss.* S's taxable income or loss is consolidated taxable income (or loss) determined by including only S's items of income, gain, deduction, and loss taken into account in determining consolidated taxable income (or loss), treating S's deductions and losses as taken into account to the extent they are absorbed by S or any other member. For this purpose:

(A) To the extent that S's deduction or loss is absorbed in the year it arises or is carried forward and absorbed in a subsequent year (e.g., under section 172, 465, or 1212), the deduction or loss is taken into account under paragraph (b)(2) of this section in the year in which it is absorbed.

(B) To the extent that S's deduction or loss is carried back and absorbed in a prior year (whether consolidated or separate), the deduction or loss is taken into account under paragraph (b)(2) of this section in the year in which it arises and not in the year in which it is absorbed.

(ii) *Tax-exempt income*—(A) *In general.* S's tax-exempt income is its income and gain which is taken into account but permanently excluded from its gross income under applicable law, and which increases, directly or indirectly, the basis of its assets (or an equivalent amount). For example, S's dividend income to which §1.1502–13(f)(2)(ii) applies, and its interest excluded from gross income under section 103, are treated as tax-exempt income. However, S's income not recognized under section 1031 is not treated as tax- exempt income because the corresponding basis adjustments under section 1031(d) prevent S's nonrecognition from being permanent. Similarly, S's tax-exempt income does not include gain not recognized under section 332 from the liquidation of a lower-tier subsidiary, or not recognized under section 118 or section 351 from a transfer of assets to S.

(B) *Equivalent deductions.* To the extent that S's taxable income or gain is permanently offset by a deduction or loss that does not reduce, directly or indirectly, the basis of S's assets (or an equivalent amount), the income or gain is treated as tax-exempt income and is taken into account under paragraph (b)(3)(ii)(A) of this section. In addition, the income and the offsetting item are taken into account under paragraph (b)(3)(i) of this section. For example, if S receives a $100 dividend with respect to which a $70 dividends received deduction is allowed under section 243, $70 of the dividend is treated as tax-exempt income. Accordingly, P's basis in S's stock increases by $100 because the $100 dividend and $70 deduction are taken into account under paragraph (b)(3)(i) of this section (resulting in $30 of the increase), and $70 of the dividend is also taken into account under paragraph (b)(3)(ii)(A) of this section as tax-exempt income (resulting in $70 of the increase). (See paragraph (b)(3)(iii) of this section if there is a corresponding negative adjustment under section 1059.) Similarly, income from mineral properties is treated as tax-exempt income to the extent it is offset by deductions for depletion in excess of the basis of the property.

(C) *Discharge of indebtedness income*—(*1*) *In general.* Excluded COD income is treated as tax-exempt income only to the extent the discharge is applied to reduce tax attributes attributable to any member of the group under section 108, section 1017 or § 1.1502–28. However, if S is treated as realizing excluded COD income pursuant to § 1.1502–28(a)(3), S shall not be treated as realizing excluded COD income for purposes of the preceding sentence.

(*2*) *Expired loss carryovers.* If the amount of the discharge exceeds the amount of the attribute reduction, the excess is nevertheless treated as applied to reduce tax attributes to the extent a loss carryover expired without tax benefit, the expiration was taken into account as a noncapital, nondeductible expense under paragraph (b)(3)(iii) of this section, and the loss carryover would have been reduced had it not expired.

(D) *Basis shifts.* An increase in the basis of S's assets (or an equivalent as described in paragraph (b)(3)(iv)(B) of this section) is treated as tax-exempt income to the extent that the increase is not otherwise taken into account in determining stock basis, it corresponds to a negative adjustment that is taken into account by the group under this paragraph (b) (or incurred by the common parent), and it has the effect (viewing the group in the aggregate) of a permanent recovery of the reduction. For example, S's basis increase under section 50(c)(2) is treated as tax-exempt income to the extent the preceding basis reduction under section 50(c)(1) is reflected in the basis of a member's stock. On the other hand, if S increases the basis of an asset as the result of an accounting method change, and the related positive section 481(a) adjustment is taken into account over time, the basis increase is not treated as tax-exempt income.

(iii) *Noncapital, nondeductible expenses*—(A) *In general.* S's noncapital, nondeductible expenses are its deductions and losses that are taken into account but permanently disallowed or eliminated under applicable law in determining its taxable income or loss, and that decrease, directly or indirectly, the basis of its assets (or an equivalent amount). For example, S's Federal taxes described in section 275 and loss not recognized under section 311(a) are noncapital, nondeductible expenses. Similarly, if a loss carryover (e.g., under section 172 or 1212) attributable to S expires or is reduced under section 108(b) and § 1.1502–28, it becomes a noncapital, nondeductible expense at the close of the last tax year to which it may be carried. However, when a tax attribute attributable to S is reduced as required pursuant to § 1.1502–28(a)(3), the reduction of the tax attribute is not treated as a noncapital, nondeductible expense of S. Finally, if S sells and repurchases a security subject to section 1091, the disallowed loss is not a noncapital, nondeductible expense because the corresponding basis adjustments under section 1091(d) prevent the disallowance from being permanent.

(B) *Nondeductible basis recovery.* Any other decrease in the basis of S's assets (or an equivalent as described in paragraph (b)(3)(iv)(B) of this section) may be a noncapital, nondeductible expense

to the extent that the decrease is not otherwise taken into account in determining stock basis and is permanently eliminated for purposes of determining S's taxable income or loss. Whether a decrease is so treated is determined by taking into account both the purposes of the Code or regulatory provision resulting in the decrease and the purposes of this section. For example, S's noncapital, nondeductible expenses include any basis reduction under section 50(c)(1), section 1017, section 1059, § 1.1502–35(b) or (f)(2). Also included as a noncapital, nondeductible expense is the amount of any gross-up for taxes paid by another taxpayer that S is treated as having paid (e.g., income included under section 78, or the portion of an undistributed capital gain dividend that is treated as tax deemed to have been paid by a shareholder under section 852(b)(3)(D)(ii), whether or not any corresponding amount is claimed as a tax credit). In contrast, a decrease generally is not a noncapital, nondeductible expense if it results because S redeems stock in a transaction to which section 302(a) applies, S receives assets in a liquidation to which section 332 applies and its basis in the assets is less than its basis in the stock canceled, or S distributes the stock of a subsidiary in a distribution to which section 355 applies.

(C) *Loss suspended under § 1.1502–35(c).* Any loss suspended pursuant to § 1.1502–35(c) is treated as a noncapital, nondeductible expense incurred during the taxable year that includes the date of the disposition to which such section applies. See § 1.1502–35(c)(3). Consequently, the basis of a higher-tier member's stock of P is reduced by the suspended loss in the year it is suspended.

(D) *Loss disallowed under § 1.1502–35(g)(3)(iii).* Any loss or deduction the use of which is disallowed pursuant to § 1.1502–35(g)(3)(iii) (other than a loss or deduction described in § 1.1502–35(g)(3)(i)(B)(*11*)), and with respect to which no waiver described in paragraph (b)(4) of this section is filed, is treated as a noncapital, nondeductible expense incurred during the taxable year that such loss would otherwise be absorbed. See § 1.1502–35(g)(3)(iv).

(iv) *Special rules for tax-exempt income and noncapital, nondeductible expenses.* For purposes of paragraphs (b)(3)(ii) and (iii) of this section:

(A) *Treatment as permanent.* An amount is permanently excluded from gross income, or permanently disallowed or eliminated, if it is so treated by S even though another person may take a corresponding amount into account. For example, if S sells property to a nonmember at a loss that is disallowed under section 267(a), S's loss is a noncapital, nondeductible expense even though under section 267(d) the nonmember may treat a corresponding amount of gain as not recognized. (If the nonmember is a subsidiary in another consolidated group, its gain not recognized under section 267(d) is tax-exempt income under paragraph (b)(3)(ii)(A) of this section.)

(B) *Amounts equivalent to basis and adjustments to basis.* Amounts equivalent to basis include the amount of money, the amount of a loss carryover, and the amount of an adjustment to gain or loss under section 475(a) for securities described in section 475(a)(2). An equivalent to a basis increase includes a decrease in an excess loss account, and an equivalent to a basis decrease includes the denial of basis for taxable income.

(C) *Timing.* An amount is taken into account in the year in which it would be taken into account under paragraph (b)(3)(i) of this section if it were subject to Federal income taxation.

(D) *Tax sharing agreements.* Taxes are taken into account by applying the principles of section 1552 and the percentage method under § 1.1502–33(d)(3) (and by assuming a 100% allocation of any decreased tax liability). The treatment of amounts allocated under this paragraph (b)(3)(iv)(D) is analogous to the treatment of allocations under § 1.1552–1(b)(2). For example, if one member owes a payment to a second member, the first member is treated as indebted to the second member. The right to receive payment is treated as a positive adjustment under paragraph (b)(3)(ii) of this section, and the obligation to make payment is treated as a negative adjustment under paragraph (b)(3)(iii) of this section. If the obligation is not paid, the amount not paid generally is treated as a distribution,

contribution, or both, depending on the relationship between the members.

(v) *Distributions.* Distributions taken into account under paragraph (b)(2) of this section are distributions with respect to S's stock to which section 301 applies and all other distributions treated as dividends (e.g., under section 356(a)(2)). See §1.1502–13(f)(2)(iv) for taking into account distributions to which section 301 applies (but not other distributions treated as dividends) under the entitlement rule.

(4) *Waiver of loss carryovers from separate return limitation years*—(i) *General rule.* If S has a loss carryover from a separate return limitation year when it becomes a member of a consolidated group, the group may make an irrevocable election to treat all or any portion of the loss carryover as expiring for all Federal income tax purposes immediately before S becomes a member of the consolidated group (deemed expiration). If S was a member of another group immediately before it became a member of the consolidated group, the expiration is also treated as occurring immediately after it ceases to be a member of the prior group.

(ii) *Stock basis adjustments from a waiver*—(A) *Qualifying transactions.* If S becomes a member of the consolidated group in a qualifying cost basis transaction and an election under this paragraph (b)(4) is made, the noncapital, nondeductible expense resulting from the deemed expiration does not result in a corresponding stock basis adjustment for any member under this section. A qualifying cost basis transaction is the purchase (i.e., a transaction in which basis is determined under section 1012) by members of the acquiring consolidated group (while they are members) in a 12-month period of an amount of S's stock satisfying the requirements of section 1504(a)(2).

(B) *Nonqualifying transactions.* If S becomes a member of the consolidated group other than in a qualifying cost basis transaction and an election under this paragraph (b)(4) is made, the basis of its stock that is owned by members immediately after it becomes a member is subject to reduction under the principles of this section to reflect the deemed expiration. The reduction occurs immediately before S becomes a member, but after it ceases to be a member of any prior group, and it therefore does not result in a corresponding stock basis adjustment for any higher-tier member of the transferring or acquiring consolidated group. Any basis reduction under this paragraph (b)(4)(ii)(B) is taken into account in making determinations of basis under the Code with respect to S's stock (e.g., a determination under section 362 because the stock is acquired in a transaction described in section 368(a)(1)(B)), but it does not result in corresponding stock basis adjustments under this section for any higher-tier member. If the basis reduction exceeds the basis of S's stock, the excess is treated as an excess loss account to which the members owning S's stock succeed.

(C) *Higher-tier corporations.* If S becomes a member of the consolidated group as a result, in whole or in part, of a higher-tier corporation becoming a member (whether or not in a qualifying cost basis transaction), additional adjustments are required. The highest-tier corporation (T) whose becoming a member resulted in S becoming a member, and T's chain of lower-tier corporations that includes S, are subject to the adjustment. The deemed expiration of S's loss carryover that results in a negative adjustment for the first higher-tier corporation is treated as an expiring loss carryover of that higher-tier corporation for purposes of applying paragraph (b)(4)(ii)(B) of this section to that corporation. For example, if P purchases all of the stock of T, T owns all of the stock of T1, T1 owns all of the stock of S, S becomes a member as a result of T becoming a member, and the election under this paragraph (b)(4) is made, the basis of the S stock is reduced and the reduction tiers up to T1, T1 treats the negative adjustment to its basis in S's stock as an expiring loss carryover of T1, and T then adjusts its basis in T1's stock. In addition, if T becomes a member of the acquiring group in a transaction other than a qualifying cost basis transaction, the amount that tiers up to T also reduces the basis of its stock under paragraph (b)(4)(ii)(B) of this section (but the

amount does not tier up to higher-tier members).

(iii) *Net asset basis limitation.* Basis reduced under this paragraph (b)(4) is restored before S becomes a member (and before the basis of S's stock is taken into account in determining basis under the Code) to the extent necessary to conform a share's basis to its allocable portion of net asset basis. In the case of higher-tier corporations under paragraph (b)(4)(ii)(C) of this section, the restoration does not tier up but is instead applied separately to each higher-tier corporation. For purposes of determining each corporation's net asset basis (including the basis of stock in lower-tier corporations), the restoration is applied in the order of tiers, from the lowest to the highest. For purposes of the restoration:

(A) A member's net asset basis is the positive or negative difference between the adjusted basis of its assets (and the amount of any of its loss carryovers that are not deemed to expire) and its liabilities. Appropriate adjustments must be made, for example, to disregard liabilities that subsequently will give rise to deductions (e.g., liabilities to which section 461(h) applies).

(B) Within a class of stock, each share has the same allocable portion of net asset basis. If there is more than one class of common stock, the net asset basis is allocated to each class by taking into account the terms of each class and all other facts and circumstances relating to the overall economic arrangement.

(iv) *Election.* The election described in this paragraph (b)(4) must be made in a separate statement entitled ''ELECTION TO TREAT LOSS CARRYOVER AS EXPIRING UNDER §1.1502–32(b)(4).'' The statement must be filed with the consolidated group's return for the year S becomes a member, and it must be signed by the common parent and S. A separate statement must be made for each member whose loss carryover is deemed to expire. The statement must identify the amount of each loss carryover deemed to expire (or the amount of each loss carryover deemed not to expire, with any balance of any loss carryovers being deemed to expire), the basis of any stock reduced as a result of the deemed expiration, and the computation of the basis reduction.

(v) *Special rule for loss carryovers of a subsidiary acquired in a transaction for which an election under §1.1502–20(i)(2) is made*—(A) *Expired losses.* Notwithstanding paragraph (b)(4)(iv) of this section, unless a group otherwise chooses, to the extent that S's loss carryovers are increased by reason of an election under §1.1502–20(i)(2) and such loss carryovers expire or would have been properly used to offset income in a taxable year for which the refund of an overpayment is prevented by any law or rule of law as of the date the group files its original return for the taxable year in which S receives the notification described in §1.1502–20(i)(3)(iv) and at all times thereafter, the group will be deemed to have made an election under paragraph (b)(4) of this section to treat all of such loss carryovers as expiring for all Federal income tax purposes immediately before S became a member of the consolidated group. A group may choose not to apply the rule of the previous sentence to all of such loss carryovers of S by taking a position on an original or amended tax return for each relevant taxable year that is consistent with having made such choice.

(B) *Available losses.* Notwithstanding paragraph (b)(4)(iv) of this section, to the extent that S's loss carryovers are increased by reason of an election under §1.1502–20(i)(2) and such loss carryovers have not expired and would not have been properly used to offset income in a taxable year for which the refund of an overpayment is prevented by any law or rule of law as of the date the group files its original return for the taxable year in which S receives the notification described in §1.1502–20(i)(3)(iv) and at all times thereafter, the group may make an election under paragraph (b)(4) of this section to treat all or a portion of such loss carryovers as expiring for all Federal income tax purposes immediately before S became a member of the consolidated group. Such election must be filed with the group's original return for the taxable year in which S receives the notification described in §1.1502–20(i)(3)(iv).

(C) *Effective dates.* Paragraph (b)(4)(v) of this section is applicable on and after March 3, 2005. For prior periods, see §1.1502–32T(b)(4)(v) as contained in the 26 CFR part 1 in effect on March 2, 2005.

(vi) *Special rules in the case of certain transactions subject to §1.1502–35.* If a member of a consolidated group transfers stock of a subsidiary and such stock has a basis that exceeds its value immediately before such transfer or a subsidiary is deconsolidated and any stock of such subsidiary owned by members of the group immediately before such deconsolidation has a basis that exceeds its value, all members of the group are subject to the provisions of §1.1502–35(b), which generally require a redetermination of members' basis in all shares of subsidiary stock.

(vii) *Special rules for amending waiver of loss carryovers from separate return limitation year*—(A) *Waivers that increased allowable loss or reduced basis reduction required.* If, in connection with the acquisition of S, the group made an election pursuant to paragraph (b)(4) of this section to treat all or any portion of S's loss carryovers as expiring, and the prior group elected to determine the amount of the allowable loss or the basis reduction required with respect to the stock of S or a higher-tier corporation of S by applying the provisions described in §1.1502–20(i)(2)(i) or (ii), then the group may reduce the amount of any loss carryover deemed to expire (or increase the amount of any loss carryover deemed not to expire) as a result of the election made pursuant to paragraph (b)(4) of this section. The aggregate amount of loss carryovers that may be treated as not expiring as a result of amendments made pursuant to this paragraph (b)(4)(vii)(A) with respect to S and any higher- and lower-tier corporation of S may not exceed the amount described in §1.1502–20(c)(1)(iii) with respect to the acquired stock (computed without regard to the effect of the group's election or elections pursuant to paragraph (b)(4) of this section, but with regard to the effect of the prior group's election pursuant to §1.1502–20(g), if any, prior to the application of §1.1502–20(i)(3)). For purposes of determining the aggregate amount of loss carryovers that may be treated as not expiring as a result of amendments made pursuant to this paragraph (b)(4)(vii)(A) with respect to S and any higher- and lower-tier corporation of S, the group may rely on a written notification provided by the prior group. Nothing in this paragraph shall be construed as permitting a group to increase the amount of any loss carryover deemed to expire (or reduce the amount of any loss carryover deemed not to expire) as a result of the election made pursuant to paragraph (b)(4) of this section.

(B) *Inadvertent waivers of loss carryovers previously subject to an election described in §1.1502–20(g).* If, in connection with the acquisition of S, the group made an election pursuant to paragraph (b)(4) of this section to waive loss carryovers of S by identifying the amount of each loss carryover deemed not to expire, the prior group elected to determine the amount of the allowable loss or the basis reduction required with respect to the stock of S or a higher-tier corporation of S by applying the provisions described in §1.1502–20(i)(2)(i) or (ii), and the amount of S's loss carryovers treated as reattributed to the prior group pursuant to the election described in §1.1502–20(g) is reduced pursuant to §1.1502–20(i)(3), then the group may amend its election made pursuant to paragraph (b)(4) of this section to provide that all or a portion of the loss carryovers of S that are treated as loss carryovers of S as a result of the prior group's election to apply the provisions described in §1.1502–20(i)(2)(i) or (ii) are deemed not to expire. This paragraph (b)(4)(vii)(B), however, does not permit a group to reduce the amount of any loss carryover deemed not to expire as a result of the election made pursuant to paragraph (b)(4) of this section.

(C) *Time and manner of amending an election under §1.1502–32(b)(4).* The amendment of an election made pursuant to paragraph (b)(4) of this section must be made in a statement entitled *Amendment of Election to Treat Loss Carryover as Expiring Under §1.1502–32(b)(4) Pursuant to §1.1502–32(b)(4)(vii).* The statement must be filed with or as part of any timely filed (including extensions) original return for the taxable year that includes August 26, 2004, or

with or as part of an amended return filed before the date the original return for the taxable year that includes August 26, 2004, is due (with regard to extensions). A separate statement shall be filed for each election made pursuant to paragraph (b)(4) of this section that is being amended pursuant to this paragraph (b)(4)(vii). For purposes of making this statement, the group may rely on the statements set forth in a written notification provided by the prior group. The statement filed under this paragraph must include the following—

(*1*) The name and employer identification number (E.I.N.) of S;

(*2*) In the case of an amendment made pursuant to paragraph (b)(4)(vii)(A), a statement that the group has received a written notification from the prior group confirming that the group's prior election or elections pursuant to paragraph (b)(4) of this section had the effect of either increasing the prior group's allowable loss on the disposition of subsidiary stock or reducing the prior group's amount of basis reduction required;

(*3*) The amount of each loss carryover of S deemed to expire (or the amount of loss carryover deemed not to expire) as set forth in the election made pursuant to paragraph (b)(4) of this section;

(*4*) The amended amount of each loss carryover of S deemed to expire (or the amended amount of loss carryover deemed not to expire); and

(*5*) In the case of an amendment made pursuant to paragraph (b)(4)(vii)(A) of this section, a statement that the aggregate amount of loss carryovers of S and any higher- and lower-tier corporation of S that will be treated as not expiring as a result of amendments made pursuant to paragraph (b)(4)(vii)(A) of this section will not exceed the amount described in §1.1502–20(c)(1)(iii) with respect to the acquired stock (computed without regard to the effect of the group's election or elections pursuant to paragraph (b)(4) of this section, but with regard to the effect of the prior group's election pursuant to §1.1502–20(g), if any, prior to the application of §1.1502–20(i)(3)).

(D) *Items taken into account in open years.* An amendment to an election made pursuant to paragraph (b)(4) of this section affects the group's items of income, gain, deduction, or loss only to the extent that the amendment gives rise, directly or indirectly, to items or amounts that would properly be taken into account in a year for which an assessment of deficiency or a refund for overpayment, as the case may be, is not prevented by any law or rule of law. Under this paragraph, if the year to which a loss previously deemed to expire as a result of an election made pursuant to paragraph (b)(4) of this section is deemed not to expire as a result of an election made pursuant to this paragraph would have been carried back or carried forward is a year for which a refund of overpayment is prevented by law, then to the extent that the absorption of such loss in such year would have affected the tax treatment of another item (*e.g.*, another loss that was absorbed in such year) that has an effect in a year for which a refund of overpayment is not prevented by any law or rule of law, the amendment to the election made pursuant to paragraph (b)(4) of this section will affect the treatment of such other item. Therefore, if the absorption of such loss (the first loss) in a year for which a refund of overpayment is prevented by law would have prevented the absorption of another loss (the second loss) in such year and such second loss would have been carried to and used in a year for which a refund of overpayment is not prevented by any law or rule of law (the other year), the amendment of the election makes the second loss available for use in the other year.

(E) *Higher- and lower-tier corporations of S.* A *higher-tier corporation of S* is a corporation that was a member of the prior group and, as a result of such higher-tier corporation becoming a member of the group; S became a member of the group. A *lower-tier corporation of S* is a corporation that was a member of the prior group and became a member of the group as a result of S becoming a member of the group.

(F) *Effective date.* This paragraph (b)(4)(vii) is applicable on and after March 3, 2005. For prior periods, see §1.1502–32T(b)(4)(vii) as contained in the 26 CFR part 1 in effect on March 2, 2005.

(5) *Examples*—(i) *In general.* For purposes of the examples in this section, unless otherwise stated, P owns all of the only class of S's stock, the stock is owned for the entire year, S owns no stock of lower-tier members, the tax year of all persons is the calendar year, all persons use the accrual method of accounting, the facts set forth the only corporate activity, preferred stock is described in section 1504(a)(4), all transactions are between unrelated persons, and tax liabilities are disregarded.

(ii) *Stock basis adjustments.* The principles of this paragraph (b) are illustrated by the following examples.

Example 1. Taxable income. (a) *Current taxable income.* For Year 1, the P group has $100 of taxable income when determined by including only S's items of income, gain, deduction, and loss taken into account. Under paragraph (b)(1) of this section, P's basis in S's stock is adjusted under this section as of the close of Year 1. Under paragraph (b)(2) of this section, P's basis in S's stock is increased by the amount of the P group's taxable income determined by including only S's items taken into account. Thus, P's basis in S's stock is increased by $100 as of the close of Year 1.

(b) *Intercompany gain that is not taken into account.* The facts are the same as in paragraph (a) of this *Example 1,* except that S also sells property to another member at a $25 gain in Year 1, the gain is deferred under §1.1502–13 and taken into account in Year 3, and P sells 10% of S's stock to nonmembers in Year 2. Under paragraph (b)(3)(i) of this section, S's deferred gain is not additional taxable income for Year 1 or 2 because it is not taken into account in determining the P group's consolidated taxable income for either of those years. The deferred gain is not tax-exempt income under paragraph (b)(3)(ii) of this section because it is not permanently excluded from S's gross income. The deferred gain does not result in a basis adjustment until Year 3, when it is taken into account in determining the P group's consolidated taxable income. Consequently, P's basis in the S shares sold is not increased to reflect S's gain from the intercompany sale of the property. In Year 3, the deferred gain is taken into account, but the amount allocable to the shares sold by P does not increase their basis because these shares are held by nonmembers.

(c) *Intercompany gain taken into account.* The facts are the same as in paragraph (b) of this *Example 1,* except that P sells all of S's stock in Year 2 (rather than only 10%). Under §1.1502–13, S takes the $25 gain into account immediately before S becomes a nonmember. Thus, P's basis in S's stock is increased to reflect S's gain from the intercompany sale of the property.

Example 2. Tax loss. (a) *Current absorption.* For Year 2, the P group has a $50 consolidated net operating loss when determined by taking into account only S's items of income, gain, deduction, and loss. S's loss is absorbed by the P group in Year 2, offsetting P's income for that year. Under paragraph (b)(3)(i)(A) of this section, because S's loss is absorbed in the year it arises, P has a $50 negative adjustment with respect to S's stock. Under paragraph (b)(2) of this section, P reduces its basis in S's stock by $50. Under paragraph (a)(3)(ii) of this section, if the decrease exceeds P's basis in S's stock, the excess is P's excess loss account in S's stock.

(b) *Interim determination from stock sale.* The facts are the same as in paragraph (a) of this *Example 2,* except that S's Year 2 loss arises in the first half of the calendar year, P sells 50% of S's stock on July 1 of Year 2, and P's income for Year 2 does not arise until after the sale of S's stock. P's income for Year 2 (exclusive of the sale of S's stock) is offset by S's loss, even though the income arises after the stock sale, and no loss remains to be apportioned to S. See §§1.1502–11 and 1.1502–21(b). Under paragraph (b)(3)(i)(A) of this section, because S's $50 loss is absorbed in the year it arises, it reduces P's basis in the S shares sold by $25 immediately before the stock sale. Because S becomes a nonmember, the loss also reduces P's basis in the retained S shares by $25 immediately before S becomes a nonmember.

(c) *Loss carryback.* The facts are the same as in paragraph (a) of this *Example 2,* except that P has no income or loss for Year 2, S's $50 loss is carried back and absorbed by the P group in Year 1 (offsetting the income of P or S), and the P group receives a $17 tax refund in Year 2 that is paid to S. Under paragraph (b)(3)(i)(B) of this section, because the $50 loss is carried back and absorbed in Year 1, it is treated as a tax loss for Year 2 (the year in which it arises). Under paragraph (b)(3)(ii) of this section, the refund is treated as tax-exempt income of S. Under paragraph (b)(3)(iv)(C) of this section, the tax- exempt income is taken into account in Year 2 because that is the year it would be taken into account under S's method of accounting if it were subject to Federal income taxation. Thus, under paragraph (b)(2) of this section, P reduces its basis in S's stock by $33 as of the close of Year 2 (the $50 tax loss, less the $17 tax refund).

(d) *Loss carryforward.* The facts are the same as in paragraph (a) of this *Example 2,* except that P has no income or loss for Year 2, and S's loss is carried forward and absorbed by the P group in Year 3 (offsetting the income of P or S). Under paragraph (b)(3)(i)(A) of this section, the loss is not

treated as a tax loss under paragraph (b)(2) of this section until Year 3.

Example 3. Tax-exempt income and noncapital, nondeductible expenses. (a) *Facts.* For Year 1, the P group has $500 of consolidated taxable income. However, the P group has a $100 consolidated net operating loss when determined by including only S's items of income, gain, deduction, and loss taken into account. Also for Year 1, S has $80 of interest income that is permanently excluded from gross income under section 103, and S incurs $60 of related expense for which a deduction is permanently disallowed under section 265.

(b) *Analysis.* Under paragraph (b)(3)(i)(A) of this section, S has a $100 tax loss for Year 1. Under paragraph (b)(3)(ii)(A) of this section, S has $80 of tax-exempt income. Under paragraph (b)(3)(iii)(A) of this section, S has $60 of noncapital, nondeductible expense. Under paragraph (b)(3)(iv)(C) of this section, the tax-exempt income and noncapital, nondeductible expense are taken into account in Year 1 because that is the year they would be taken into account under S's method of accounting if they were subject to Federal income taxation. Thus, under paragraph (b) of this section, P reduces its basis in S's stock as of the close of Year 1 by an $80 net amount (the $100 tax loss, less $80 of tax-exempt income, plus $60 of noncapital, nondeductible expenses).

Example 4. Discharge of indebtedness. (a) *Facts.* P forms S on January 1 of Year 1 and S borrows $200. During Year 1, S's assets decline in value and the P group has a $100 consolidated net operating loss. Of that amount, $10 is attributable to P and $90 is attributable to S under the principles of § 1.1502–21(b)(2)(iv). None of the loss is absorbed by the group in Year 1, and S is discharged from $100 of indebtedness at the close of Year 1. P has a $0 basis in the S stock. P and S have no attributes other than the consolidated net operating loss. Under section 108(a), S's $100 of discharge of indebtedness income is excluded from gross income because of insolvency. Under section 108(b) and § 1.1502–28, the consolidated net operating loss is reduced to $0.

(b) *Analysis.* Under paragraph (b)(3)(iii)(A) of this section, the reduction of $90 of the consolidated net operating loss attributable to S is treated as a noncapital, nondeductible expense in Year 1 because that loss is permanently disallowed by section 108(b) and § 1.1502–28. Under paragraph (b)(3)(ii)(C)(*1*) of this section, all $100 of S's discharge of indebtedness income is treated as tax-exempt income in Year 1 because the discharge results in a $100 reduction to the consolidated net operating loss. Consequently, the loss and the cancellation of the indebtedness result in a net positive $10 adjustment to P's basis in its S stock.

(c) *Insufficient attributes.* The facts are the same as in paragraph (a) of this Example 4, except that S is discharged from $120 of indebtedness at the close of Year 1. Under section 108(a), S's $120 of discharge of indebtedness income is excluded from gross income because of insolvency. Under section 108(b) and § 1.1502–28, the consolidated net operating loss is reduced by $100 to $0 after the determination of tax for Year 1. Under paragraph (b)(3)(iii)(A) of this section, the reduction of $90 of the consolidated net operating loss attributable to S is treated as a noncapital, nondeductible expense. Under paragraph (b)(3)(ii)(C)(*1*) of this section, only $100 of the discharge is treated as tax-exempt income because only that amount is applied to reduce tax attributes. The remaining $20 of discharge of indebtedness income excluded from gross income under section 108(a) has no effect on P's basis in S's stock.

(d) *Purchase price adjustment.* Assume instead that S buys land in Year 1 in exchange for S's $100 purchase money note (bearing interest at a market rate of interest in excess of the applicable Federal rate, and providing for a principal payment at the end of Year 10), and the seller agrees with S in Year 4 to discharge $60 of the note as a purchase price adjustment to which section 108(e)(5) applies. S has no discharge of indebtedness income that is treated as tax-exempt income under paragraph (b)(3)(ii) of this section. In addition, the $60 purchase price adjustment is not a noncapital, nondeductible expense under paragraph (b)(3)(iii) of this section. A purchase price adjustment is not equivalent to a discharge of indebtedness that is offset by a deduction or loss. Consequently, the purchase price adjustment results in no net adjustment to P's basis in S's stock under paragraph (b) of this section.

Example 5. Distributions. (a) *Amounts declared and distributed.* For Year 1, the P group has $120 of consolidated taxable income when determined by including only S's items of income, gain, deduction, and loss taken into account. S declares and makes a $10 dividend distribution to P at the close of Year 1. Under paragraph (b) of this section, P increases its basis in S's stock as of the close of Year 1 by a $110 net amount ($120 of taxable income, less a $10 distribution).

(b) *Distributions in later years.* The facts are the same as in paragraph (a) of this *Example 5*, except that S does not declare and distribute the $10 until Year 2. Under paragraph (b) of this section, P increases its basis in S's stock by $120 as of the close of Year 1, and decreases its basis by $10 as of the close of Year 2. (If P were also a subsidiary, the basis of its stock would also be increased in Year 1 to reflect P's $120 adjustment to basis of S's stock; the basis of P's stock would not be changed as a result of S's distribution in Year 2, because P's $10 of tax-exempt dividend income under paragraph (b)(3)(ii) of this section would be offset by the $10 negative

adjustment to P's basis in S's stock for the distribution.)

(c) *Amounts declared but not distributed.* The facts are the same as in paragraph (a) of this *Example 5,* except that, during December of Year 1, S declares (and P becomes entitled to) another $70 dividend distribution with respect to its stock, but P does not receive the distribution until after it sells all of S's stock at the close of Year 1. Under § 1.1502–13(f)(2)(iv), S is treated as making a $70 distribution to P at the time P becomes entitled to the distribution. (If S is distributing an appreciated asset, its gain under section 311 is also taken into account under paragraph (b)(3)(i) of this section at the time P becomes entitled to the distribution.) Consequently, under paragraph (b) of this section, P increases its basis in S's stock as of the close of Year 1 by only a $40 net amount ($120 of taxable income, less two distributions totalling $80). Any further adjustments after S ceases to be a member and the $70 distribution is made would be duplicative, because the stock basis has already been adjusted for the distribution. Accordingly, the distribution will not result in further adjustments or gain, even if the distribution is a payment to which section 301(c)(2) or (3) applies.

Example 6. Reorganization with boot. (i) *Facts.* P owns all the stock of S and T. P owns ten shares of the same class of common stock of S and ten shares of the same class of common stock of T. The fair market value of each share of S stock is $10 and the fair market value of each share of T stock is $10. On January 1 of Year 1, P has a $5 basis in each of its ten shares of S stock and a $10 basis in each of its ten shares of T stock. S and T have no items of income, gain, deduction, or loss for Year 1. S and T each have substantial earnings and profits. At the close of Year 1, T merges into S in a reorganization described in section 368(a)(1)(A) (and in section 368(a)(1)(D)). P receives no additional S stock, but does receive $10 which is treated as a dividend under section 356(a)(2).

(ii) *Analysis.* The merger of T into S is a transaction to which §1.1502–13(f)(3) applies. Under §1.1502–13(f)(3) and §1.358–2(a)(2)(iii), P is deemed to receive ten additional shares of S stock with a total fair market value of $100 (the fair market value of the T stock surrendered by P). Under §1.358–2(a)(2)(i), P will have a basis of $10 in each share of S stock deemed received in the reorganization. Under §1.358–2(a)(2)(iii), P is deemed to surrender all twenty shares of its S stock in a recapitalization under section 368(a)(1)(E) in exchange for the ten shares of S stock, the number of shares of S stock held by P immediately after the transaction. Thus, under §1.358–2(a)(2)(i), P has five shares of S stock each with a basis of $10 and five shares of S stock each with a basis of $20. The $10 P received is treated as a dividend distribution under section 301 and, under paragraph (b)(3)(v) of this section, the $10 is a distribution to which paragraph (b)(2)(iv) of this section applies. Accordingly, P's total basis in the S stock is decreased by the $10 distribution.

Example 7. Tiering up of basis adjustments. P owns all of S's stock, and S owns all of T's stock. For Year 1, the P group has $100 of consolidated taxable income when determined by including only T's items of income, gain, deduction, and loss taken into account, and $50 of consolidated taxable income when determined by including only S's items taken into account. S increases its basis in T's stock by $100 under paragraph (b) of this section. Under paragraph (a)(3) of this section, this $100 basis adjustment is taken into account in determining P's adjustments to its basis in S's stock. Thus, P increases its basis in S's stock by $150 under paragraph (b) of this section.

Example 8. Allocation of items. (a) *Acquisition in mid-year.* P is the common parent of a consolidated group, and S is an unaffiliated corporation filing separate returns on a calendar-year basis. P acquires all of S's stock and S becomes a member of the P group on July 1 of Year 1. For the entire calendar Year 1, S has $100 of ordinary income and under § 1.1502–76(b) $60 is allocated to the period from January 1 to June 30 and $40 to the period from July 1 to December 31. Under paragraph (b) of this section, P increases its basis in S's stock by $40.

(b) *Sale in mid-year.* The facts are the same as in paragraph (a) of this *Example 8,* except that S is a member of the P group at the beginning of Year 1 but ceases to be a member on June 30 as a result of P's sale of S's stock. Under paragraph (b) of this section, P increases its basis in S's stock by $60 immediately before the stock sale. (P's basis increase would be the same if S became a nonmember because S issued additional shares to nonmembers.)

(c) *Absorption of loss carryovers.* Assume instead that S is a member of the P group at the beginning of Year 1 but ceases to be a member on June 30 as a result of P's sale of S's stock, and a $100 consolidated net operating loss attributable to S is carried over by the P group to Year 1. The consolidated net operating loss may be apportioned to S for its first separate return year only to the extent not absorbed by the P group during Year 1. Under paragraph (b)(3)(i) of this section, if the loss is absorbed by the P group in Year 1, whether the offsetting income arises before or after P's sale of S's stock, the absorption of the loss carryover is included in the determination of S's taxable income or loss for Year 1. Thus, P's basis in S's stock is adjusted under paragraph (b) of this section to reflect any absorption of the loss by the P group.

Example 9. Gross-ups. (a) *Facts.* P owns all of the stock of S, and S owns all of the stock of T, a newly formed controlled foreign corporation that is not a passive foreign investment company. In Year 1, T has $100 of subpart F income and pays $34 of foreign income tax, leaving T with $66 of earnings and profits. The P group has $100 of consolidated taxable income when determined by taking into account only S's items (the inclusion under section 951(a), taking into account the section 78 gross-up). As a result of the section 951(a) inclusion, S increases its basis in T's stock by $66 under section 961(a).

(b) *Analysis.* Under paragraph (b)(3)(i) of this section, S has $100 of taxable income. Under paragraph (b)(3)(iii)(B) of this section, the $34 gross-up for taxes paid by T that S is treated as having paid is a noncapital, nondeductible expense (whether or not any corresponding amount is claimed by the P group as a tax credit). Thus, P increases its basis in S's stock under paragraph (b) of this section by the net adjustment of $66.

(c) *Subsequent distribution.* The facts are the same as in paragraph (a) of this *Example 9,* except that T distributes its $66 of earnings and profits in Year 2. The $66 distribution received by S is excluded from S's income under section 959(a) because the distribution represents earnings and profits attributable to amounts that were included in S's income under section 951(a) for Year 1. In addition, S's basis in T's stock is decreased by $66 under section 961(b). The excluded distribution is not tax-exempt income under paragraph (b)(3)(ii) of this section because of the corresponding reduction to S's basis in T's stock. Consequently, P's basis in S's stock is not adjusted under paragraph (b) of this section for Year 2.

Example 10. Recapture of tax-exempt items. (a) *Facts.* S is a life insurance company. For Year 1, the P group has $200 of consolidated taxable income, determined by including only S's items of income, gain, deduction, and loss taken into account (including a $300 small company deduction under section 806). In addition, S has $100 of tax-exempt interest income, $60 of which is S's *company share.* The remaining $40 of tax-exempt income is the *policyholders' share* that reduces S's deduction for increase in reserves.

(b) *Tax-exempt items generally.* Under paragraph (b)(3)(i) of this section, S has $200 of taxable income for Year 1. Also for Year 1, S has $100 of tax-exempt income under paragraph (b)(3)(ii)(A) of this section, and another $300 is treated as tax-exempt income under paragraph (b)(3)(ii)(B) of this section because of the deduction under section 806. Under paragraph (b)(3)(iii) of this section, S has $40 of noncapital, nondeductible expenses for Year 1 because S's deduction under section 807 for its increase in reserves has been permanently reduced by the $40 policyholders' share of the tax-exempt interest income. Thus, P increases its basis in S's stock by $560 under paragraph (b) of this section.

(c) *Recapture.* Assume instead that S is a property and casualty company and, for Year 1, S accrues $100 of estimated salvage recoverable under section 832. Of this amount, $87 (87% of $100) is excluded from gross income because of the ''fresh start'' provisions of Sec. 11305(c) of P.L. 101–508 (the Omnibus Budget Reconciliation Act of 1990). Thus, S has $87 of tax-exempt income under paragraph (b)(3)(ii)(A) of this section that increases P's basis in S's stock for Year 1. (S also has $13 of taxable income over the period of inclusion under section 481.) In Year 5, S determines that the $100 salvage recoverable was overestimated by $30 and deducts $30 for the reduction of the salvage recoverable. However, S has $26.10 (87% of $30) of taxable income in Year 5 due to the partial recapture of its fresh start. Because S has no basis corresponding to this income, S is treated under paragraph (b)(3)(iii)(B) of this section as having a $26.10 noncapital, nondeductible expense in Year 5. This treatment is necessary to reflect the elimination of the erroneous fresh start in S's stock basis and causes a decrease in P's basis in S's stock by $30 for Year 5 (a $3.90 taxable loss and a $26.10 special adjustment).

(c) *Allocation of adjustments among shares of stock*—(1) *In general.* The portion of the adjustment under paragraph (b) of this section that is described in paragraph (b)(2)(iv) of this section (negative adjustments for distributions) is allocated to the shares of S's stock to which the distribution relates. The remainder of the adjustment, described in paragraphs (b)(2)(i) through (iii) of this section (adjustments for taxable income or loss, tax-exempt income, and noncapital, nondeductible expenses), is allocated among the shares of S's stock as provided in paragraphs (c)(2) through (4) of this section. If the remainder of the adjustment is positive, it is allocated first to any preferred stock to the extent provided in paragraph (c)(3) of this section, and then to the common stock as provided in paragraph (c)(2) of this section. If the remainder of the adjustment is negative, it is allocated only to common stock as provided in paragraph (c)(2) of this section. An adjustment under this section allocated to a share for the period the share is owned by a nonmember has no effect on the basis of the share. See paragraph (c)(4) of this section for the reallocation of adjustments, and paragraph (d) of this

section for definitions. See § 1.1502-19(d) for special allocations of basis determined or adjusted under the Code with respect to excess loss accounts.

(2) *Common stock*—(i) *Allocation within a class.* The portion of the adjustment described in paragraphs (b)(2)(i) through (iii) of this section (the adjustment determined without taking distributions into account) that is allocable to a class of common stock is generally allocated equally to each share within the class. However, if a member has an excess loss account in shares of a class of common stock at the time of a positive adjustment, the portion of the adjustment allocable to the member with respect to the class is allocated first to equalize and eliminate that member's excess loss accounts and then to increase equally its basis in the shares of that class. Similarly, any negative adjustment is allocated first to reduce the member's positive basis in shares of the class before creating or increasing its excess loss account. Distributions and any adjustments or determinations under the Internal Revenue Code (e.g., under section 358, including any modifications under § 1.1502–19(d)) are taken into account before the allocation is made under this paragraph (c)(2)(i).

(ii) *Allocation among classes*—(A) *General rule.* If S has more than one class of common stock, the extent to which the adjustment described in paragraphs (b)(2)(i) through (iii) of this section (the adjustment determined without taking distributions into account) is allocated to each class is determined, based on consistently applied assumptions, by taking into account the terms of each class and all other facts and circumstances relating to the overall economic arrangement. The allocation generally must reflect the manner in which the classes participate in the economic benefit or burden (if any) corresponding to the items of income, gain, deduction, or loss allocated. In determining participation, any differences in voting rights are not taken into account, and the following factors are among those to be considered—

(*1*) The interest of each share in economic profits and losses (if different from the interest in taxable income);

(*2*) The interest of each share in cash flow and other non-liquidating distributions; and

(*3*) The interest of each share in distributions in liquidation.

(B) *Distributions and Code adjustments.* Distributions and any adjustments or determinations under the Internal Revenue Code are taken into account before the allocation is made under this paragraph (c)(2)(ii).

(3) *Preferred stock.* If the adjustment under paragraphs (b)(2)(i) through (iii) of this section (the adjustment determined without taking distributions into account) is positive, it is allocated to preferred stock to the extent required (when aggregated with prior allocations to the preferred stock during the period that S is a member of the consolidated group) to reflect distributions described in section 301 (and all other distributions treated as dividends) to which the preferred stock becomes entitled, and arrearages arising, during the period that S is a member of the consolidated group. For this purpose, the preferred stock is treated as entitled to a distribution no later than the time the distribution is taken into account under the Internal Revenue Code (e.g., under section 305). If the amount of distributions and arrearages exceeds the positive amount (when aggregated with prior allocations), the positive amount is first allocated among classes of preferred stock to reflect their relative priorities, and the amount allocated to each class is then allocated pro rata within the class. An allocation to a share with respect to arrearages and distributions for the period the share is owned by a nonmember is not reflected in the basis of the share under paragraph (b) of this section. However, if P and S cease to be members of one consolidated group and remain affiliated as members of another consolidated group, P's ownership of S's stock during consolidated return years of the prior group is treated for this purpose as ownership by a member to the extent that the adjustments during the prior consolidated return years are still reflected in the basis of the preferred stock.

(4) *Cumulative redetermination*—(i) *General rule.* A member's basis in each share of S's preferred and common

stock must be redetermined whenever necessary to determine the tax liability of any person. See paragraph (b)(1) of this section. The redetermination is made by reallocating S's net adjustment described in paragraphs (b)(2)(i) through (iii) of this section (the adjustment determined without taking distributions into account) for each consolidated return year (or other applicable period) of the group by taking into account all of the facts and circumstances affecting allocations under this paragraph (c) as of the redetermination date with respect to all of S's shares. For this purpose:

(A) Amounts may be reallocated from one class of S's stock to another class, but not from one share of a class to another share of the same class.

(B) If there is a change in the equity structure of S (e.g., as the result of S's issuance, redemption, or recapitalization of shares), a cumulative redetermination is made for the period before the change. If a reallocation is required by another redetermination after a change, amounts arising after the change are reallocated before amounts arising before the change.

(C) If S becomes a nonmember as a result of a change in its equity structure, any reallocation is made only among the shares of S's stock immediately before the change. For example, if S issues stock to a nonmember creditor in exchange for its debt, and the exchange results in S becoming a nonmember, any reallocation is only among the shares of S's stock immediately before the exchange.

(D) Any reallocation is treated for all purposes after it is made (including subsequent redeterminations) as the original allocation of an amount under this paragraph (c), but the reallocation does not affect any prior period.

(ii) *Prior use of allocations.* An amount may not be reallocated under paragraph (c)(4)(i) of this section to the extent that the amount has been used before the reallocation. For this purpose, an amount has been used to the extent it has been taken into account, directly or indirectly, by any member in determining income, gain, deduction, or loss, or in determining the basis of any property that is not subject to this section (e.g., stock of a corporation that has become a nonmember). For example, if P sells a share of S stock, an amount previously allocated to the share cannot be reallocated to another share of S stock, but an amount allocated to another share of S stock can still be reallocated to the sold share because the reallocated amount has not been taken into account; however, any adjustment reallocated to the sold share may effectively be eliminated, because the reallocation was not in effect when the share was previously sold and P's gain or loss from the sale is not redetermined. If, however, P sells the share of S stock to another member, the amount is not used until P's gain or loss is taken into account under § 1.1502–13.

(5) *Examples.* The principles of this paragraph (c) are illustrated by the following examples.

Example 1. Ownership of less than all the stock. (a) *Facts.* P owns 80% of S's only class of stock with an $800 basis. For Year 1, S has $100 of taxable income.

(b) *Analysis.* Under paragraph (c)(1) of this section, the $100 positive adjustment under paragraph (b) of this section for S's taxable income is allocated among the shares of S's stock, including shares owned by nonmembers. Under paragraph (c)(2)(i) of this section, the adjustment is allocated equally to each share of S's stock. Thus, P increases its basis in S's stock under paragraph (b) of this section as of the close of Year 1 by $80. (The basis of the 20% of S's stock owned by nonmembers is not adjusted under this section.)

(c) *Varying interest.* The facts are the same as in paragraph (a) of this *Example 1,* except that P buys the remaining 20% of S's stock at the close of business on June 30 of Year 1 for $208. Under paragraph (b)(1) of this section and the principles of § 1.1502–76(b), S's $100 of taxable income is allocable $40 to the period from January 1 to June 30 and $60 to the period from July 1 to December 31. Thus, for the period ending June 30, P is treated as having a $32 adjustment with respect to the S stock that P has owned since January 1 (80% of $40) and, under paragraph (c)(2)(i) of this section, the adjustment is allocated equally among those shares. For the period ending December 31, P is treated as having a $60 adjustment (100% of $60) that is also allocated equally among P's shares of S's stock owned after June 30. P's basis in the shares owned as of the beginning of the year therefore increases by $80 (the sum of 80% of $40 and 80% of $60), from $800 to $880, and P's basis in the shares purchased on June 30 increases by $12 (20% of $60), from $208 to $220.

Thus, P's aggregate basis in S's stock as of the end of Year 1 is $1,100.

(d) *Tax liability.* The facts are the same as in paragraph (a) of this *Example 1,* except that P pays S's $34 share of the group's consolidated tax liability resulting from S's taxable income, and S does not reimburse P. S's $100 of taxable income results in a positive adjustment under paragraph (b)(3)(i) of this section, and S's $34 of tax liability results in a negative adjustment under paragraph (b)(3)(iv)(D) of this section and the principles of section 1552. Because S does not make any payment in recognition of the additional tax liability, by analogy to the treatment under § 1.1552–1(b)(2), S is treated as having made a $34 payment that is described in paragraph (b)(3)(iii) of this section (noncapital, nondeductible expenses) and as having received an equal amount from P as a capital contribution. Thus, P increases its basis in its S stock by $52.80 (80% of the $100 of taxable income, less 80% of the $34 tax payment). In addition, P increases its basis in S's stock by $34 under the Internal Revenue Code and paragraph (a)(2) of this section to reflect the capital contribution. In the aggregate, P increases its basis in S's stock by $86.80. (If, as in paragraph (c) of this *Example 1,* P buys the remaining 20% of S's stock at the close of business on June 30, P increases its basis in S's stock by another $7.90 for the additional 20% interest in S's income after June 30 ($60 multiplied by 20%, less 20% of the $20.40 tax payment on $60); the $34 capital contribution by P is reflected in all of its S shares (not just the original 80%), and P's aggregate basis adjustment under this section is $94.70 ($86.80 plus $7.90).)

Example 2. Preferred stock. (a) *Facts.* P owns all of S's common stock with an $800 basis, and nonmembers own all of S's preferred stock. The preferred stock was issued for $200, has a $20 annual, cumulative preference as to dividends, and has an initial liquidation preference of $200. For Year 1, S has $50 of taxable income and no distributions are declared or made.

(b) *Analysis of arrearages.* Under paragraphs (c) (1) and (3) of this section, $20 of the $50 positive adjustment under paragraph (b) of this section is allocated first to the preferred stock to reflect the dividend arrearage arising in Year 1. The remaining $30 of the positive adjustment is allocated to the common stock, increasing P's basis from $800 to $830 as of the close of Year 1. (The basis of the preferred stock owned by nonmembers is not adjusted under this section.)

(c) *Current distribution.* The facts are the same as in paragraph (a) of this *Example 2,* except that S declares and makes a $20 distribution with respect to the preferred stock during Year 1 in satisfaction of its preference. The results are the same as in paragraph (b) of this *Example 2.*

(d) *Varying interest.* The facts are the same as in paragraph (a) of this *Example 2,* except that S has no income or loss for Years 1 and 2, P purchases all of S's preferred stock at the beginning of Year 3 for $240, and S has $70 of taxable income for Year 3. Under paragraph (c)(3) of this section, $60 of the $70 positive adjustment under paragraph (b) of this section is allocated to the preferred stock to reflect the dividends arrearages for Years 1 through 3, but only the $20 for Year 3 is reflected in the basis of the preferred stock under paragraph (b) of this section. (The remaining $40 is not reflected because the preferred stock was owned by nonmembers during Years 1 and 2.) Thus, P increases its basis in S's preferred stock from $240 to $260, and its basis in S's common stock from $800 to $810, as of the close of Year 3. (If P had acquired all of S's preferred stock in a transaction to which section 351 applies, and P's initial basis in S's preferred stock was $200 under section 362, P's basis in S's preferred stock would increase from $200 to $220.)

(e) *Varying interest with current distributions.* The facts are the same as in paragraph (d) of this *Example 2,* except that S declares and makes a $20 distribution with respect to the preferred stock in each of Years 1 and 2 in satisfaction of its preference, and P purchases all of S's preferred stock at the beginning of Year 3 for $200. Under paragraph (c)(3) of this section, $40 of the $70 positive adjustment under paragraph (b) of this section is allocated to the preferred stock to reflect the distributions in Years 1 and 2, and $20 of the $70 is allocated to the preferred stock to reflect the arrearage for Year 3. However, as in paragraph (d) of this *Example 2,* only the $20 attributable to Year 3 is reflected in the basis of the preferred stock under paragraph (b) of this section. Thus, P increases its basis in S's preferred stock from $200 to $220, and P increases its basis in S's common stock from $800 to $810.

Example 3. Cumulative redetermination. (a) *Facts.* P owns all of S's common and preferred stock. The preferred stock has a $100 annual, cumulative preference as to dividends. For Year 1, S has $200 of taxable income, the first $100 of which is allocated to the preferred stock and the remaining $100 of which is allocated to the common stock. For Year 2, S has no adjustment under paragraph (b) of this section, and P sells all of S's common stock at the close of Year 2.

(b) *Analysis.* Under paragraph (c)(4) of this section, P's basis in S's common stock must be redetermined as of the sale of the stock. The redetermination is made by reallocating the $200 positive adjustment under paragraph (b) of this section for Year 1 by taking into account all of the facts and circumstances affecting allocations as of the sale. Thus, the

$200 positive adjustment for Year 1 is reallocated entirely to the preferred stock to reflect the dividend arrearages for Years 1 and 2. The reallocation away from the common stock reflects the fact that, because of the additional amount of arrearage in Year 2, the common stock is not entitled to any part of the $200 of taxable income from Year 1. Thus, the common stock has no positive or negative adjustment, and the preferred stock has a $200 positive adjustment. These reallocations are treated as the original allocations for Years 1 and 2. (The results for the common stock would be the same if the common and preferred stock were not owned by the same member, or the preferred stock were owned by nonmembers.)

(c) *Preferred stock issued after adjustment arises.* The facts are the same as in paragraph (a) of this *Example 3,* except that S does not issue its preferred stock until the beginning of Year 2, S has no further adjustment under paragraph (b) of this section for Years 2 and 3, and P sells S's common stock at the close of Year 3. Under paragraphs (c) (1) and (2) of this section, the $200 positive adjustment for Year 1 is initially allocated entirely to the common stock. Under paragraph (c)(4) of this section, the $200 adjustment is reallocated to the preferred stock to reflect the arrearages for Years 2 and 3. Thus, the common stock has no positive or negative adjustment.

(d) *Common stock issued after adjustment arises.* The facts are the same as in paragraph (a) of this *Example 3,* except that S has no preferred stock, S issues additional common stock of the same class at the beginning of Year 2, S has no further adjustment under paragraph (b) of this section in Years 2 and 3, and P sells its S common stock at the close of Year 3. Under paragraphs (c) (1) and (2) of this section, the $200 positive adjustment for Year 1 is initially allocated entirely to the original common stock. Under paragraph (c)(4)(i)(A) of this section, the $200 adjustment is not reallocated among the original common stock and the additional stock. Unlike the preferred stock in paragraph (c) of this *Example 3,* the additional common stock is of the same class as the original stock, and there is no reallocation between shares of the same class.

(e) *Positive and negative adjustments.* The facts are the same as in paragraph (a) of this *Example 3,* except that S has a $200 loss for Year 2 that results in a negative adjustment to the common stock before any redetermination. For purposes of the basis redetermination under paragraph (c)(4) of this section, the Year 1 and 2 adjustments under paragraph (b) of this section are not netted. Thus, as in paragraph (b) of this *Example 3,* the redetermination is made by reallocating the $200 positive adjustment for Year 1 entirely to the preferred stock. The $200 negative adjustment for Year 2 is allocated entirely to the common stock. Consequently, the preferred stock has a $200 positive cumulative adjustment, and the common stock has a $200 negative cumulative adjustment. (The results would be the same if there were no other adjustments described in paragraph (b) of this section, P sells S's common stock at the close of Year 3 rather than Year 2, and an additional $100 arrearage arises in Year 3; only adjustments under paragraph (b) of this section may be reallocated, and there is no additional adjustment for Year 3.)

(f) *Current distributions.* The facts are the same as in paragraph (a) of this *Example 3,* except that, during Year 1, S declares and makes a distribution to P of $100 as a dividend on the preferred stock and $100 as a dividend on the common stock. The taxable income and distributions result in no Year 1 adjustment under paragraph (b) of this section for either the common or preferred stock. For example, if T merges into S, S is treated, as the context may require, as a successor to T and as becoming a member of the group. However, as in paragraph (b) of this *Example 3,* the redetermination under paragraph (c)(4) of this section is made by reallocating a $200 positive adjustment for Year 1 (S's net adjustment described in paragraph (b) of this section, determined without taking distributions into account) to the preferred stock. Consequently, the preferred stock has a $100 positive cumulative adjustment ($200 of taxable income, less a $100 distribution with respect to the preferred stock) and the common stock has a $100 negative cumulative adjustment (for the distribution).

(g) *Convertible preferred stock.* The facts are the same as in paragraph (a) of this *Example 3,* except that the preferred stock is convertible into common stock that is identical to the common stock already outstanding, the holders of the preferred stock convert the stock at the close of Year 2, and no stock is sold until the close of Year 5. Under paragraph (c)(4) of this section, the $200 positive adjustment for Year 1 is reallocated entirely to the preferred stock immediately before the conversion. The newly issued common stock is treated as a second class of S common stock, and adjustments under paragraph (b) of this section are allocated between the original and the new common stock under paragraph (c)(2)(ii) of this section. Although the preferred stock is converted to common stock, the $200 adjustment to the preferred stock is not subsequently reallocated between the original and the new common stock. Because the original and the new stock are equivalent, adjustments under paragraph (b) of this section for subsequent periods are allocated equally to each share.

(h) *Prior use of allocations.* The facts are the same as in paragraph (a) of this *Example 3,* except that P sells 10% of S's common stock at the close of Year 1, and the remaining 90%

at the close of Year 2. P's basis in the common stock sold in Year 1 reflects $10 of the adjustment allocated to the common stock for Year 1. Under paragraph (c)(4)(ii) of this section, because $10 of the Year 1 adjustment was used in determining P's gain or loss, only $90 is reallocated to the preferred stock, and $10 remains allocated to the common stock sold.

(i) *Lower-tier members.* The facts are the same as in paragraph (a) of this *Example 3,* except that P owns only S's common stock, and P is also a subsidiary. If there is a redetermination under paragraph (c)(4) of this section by a member owning P's stock, a redetermination with respect to S's stock must be made first, and the effect of that redetermination on P's adjustments is taken into account under paragraph (b) of this section. However, as in paragraph (h) of this *Example 3,* to the extent an amount of the initial adjustments with respect to S's common stock have already been tiered up and used by a member owning P's stock, that amount remains with S's common stock (and the higher-tier member using the adjustment with respect to P's stock), and may not be reallocated to S's preferred stock.

Example 4. Allocation to preferred stock between groups. (a) *Facts.* P owns all of S's only class of stock, and S owns all of T's common and preferred stock. The preferred stock has a $100 annual, cumulative preference as to dividends. For Year 1, T has $200 of taxable income, the first $100 of which is allocated to the preferred stock and the remaining $100 of which is allocated to the common stock, and S has no adjustments other than the amounts tiered up from T. S and T have no adjustments under paragraph (b) of this section for Years 2 and 3. X, the common parent of another consolidated group, purchases all of S's stock at the close of Year 3, and S and T become members of the X group. For Year 4, T has $200 of taxable income, and S has no adjustments other than the amounts tiered up from T.

(b) *Analysis for Years 1 through 3.* Under paragraph (c)(4) of this section, the allocation of S's adjustments under paragraph (b) of this section (determined without taking distributions into account) must be redetermined as of the time P sells S's stock. As a result of this redetermination, T's common stock has no positive or negative adjustment and the preferred stock has a $200 positive adjustment.

(c) *Analysis for Year 4.* Under paragraph (c)(3) of this section, the allocation of T's $200 positive adjustment in Year 4 to T's preferred stock with respect to arrearages is made by taking into account the consolidated return years of both the P group and the X group. Thus, the allocation of the $200 positive adjustment for Year 4 to T's preferred stock is not treated as an allocation for a period for which the preferred stock is owned by a nonmember. Thus, the $200 adjustment is reflected in S's basis in T's preferred stock under paragraph (b) of this section.

(d) *Definitions.* For purposes of this section—

(1) *Class.* The shares of a member having the same material terms (without taking into account voting rights) are treated as a single class of stock.

(2) *Preferred stock.* Preferred stock is stock that is limited and preferred as to dividends and has a liquidation preference. A class of stock that is not described in section 1504(a)(4), however, is not treated as preferred stock for purposes of paragraph (c) of this section if members own less than 80% of each class of common stock (determined without taking this paragraph (d)(2) into account).

(3) *Common stock.* Common stock is stock that is not preferred stock.

(4) *Becoming a nonmember.* A member is treated as becoming a nonmember if it has a separate return year (including another group's consolidated return year). For example, S may become a nonmember if it issues additional stock to nonmembers, but S does not become a nonmember as a result of its complete liquidation.

(e) *Anti-avoidance rule*—(1) *General rule.* If any person acts with a principal purpose contrary to the purposes of this section, to avoid the effect of the rules of this section or apply the rules of this section to avoid the effect of any other provision of the consolidated return regulations, adjustments must be made as necessary to carry out the purposes of this section.

(2) *Examples.* The principles of this paragraph (e) are illustrated by the following examples.

Example 1. Preferred stock treated as common stock. (a) *Facts.* S has 100 shares of common stock and 100 shares of preferred stock described in section 1504(a)(4). P owns 80 shares of S's common stock and all of S's preferred stock. The shareholders expect that S will have negative adjustments under paragraph (b) of this section for Years 1 and 2 (all of which will be allocable to S's common stock), the negative adjustments will have no significant effect on the value of S's stock, and S will have offsetting positive adjustments thereafter. When the preferred stock was issued, P intended to cause S to

recapitalize the preferred stock into additional common stock at the end of Year 2 in a transaction described in section 368(a)(1)(E). P's temporary ownership of the preferred stock is with a principal purpose to limit P's basis reductions under paragraph (b) of this section to 80% of the anticipated negative adjustments. The recapitalization is intended to cause significantly more than 80% of the anticipated positive adjustments to increase P's basis in S's stock because of P's increased ownership of S's common stock immediately after the recapitalization.

(b) *Analysis.* S has established a transitory capital structure with a principal purpose to enhance P's basis in S's stock under this section. Under paragraph (e)(1) of this section, all of S's common and preferred stock is treated as a single class of common stock in Years 1 and 2 for purposes of this section. Thus, S's items are allocated under the principles of paragraph (c)(2)(ii) of this section, and P decreases its basis in both the common and preferred stock accordingly.

Example 2. Contribution of appreciated property. (a) *Facts.* P owns all of the stock of S and T, and S and T each own 50% of the stock of U. P's S stock has a $150 basis and $200 value, and P's T stock has a $200 basis and $200 value. With a principal purpose to eliminate P's gain from an anticipated sale of S's stock, T contributes to U an asset with a $100 value and $0 basis, and S contributes $100 cash. U sells T's asset and recognizes a $100 gain that results in a $100 positive adjustment under paragraph (b) of this section.

(b) *Analysis.* Under paragraph (c)(2) of this section, U's adjustment ordinarily would be allocated equally to each share of U's stock. If so allocated, P's basis in S's stock would increase from $150 to $200 and P would recognize no gain from the sale of S's stock for $200. Under paragraph (e)(1) of this section, however, because T transferred an appreciated asset to U with a principal purpose to shift a portion of the stock basis increase from P's stock in T to P's stock in S, the allocation of the $100 positive adjustment under paragraph (c) of this section between the shares of U's stock must take into account the contribution. Consequently, all $100 of the positive adjustment is allocated to the U stock owned by T, rather than $50 to the U stock owned by S and $50 to the U stock owned by T. P's basis in S's stock remains $150, and its basis in T's stock increases to $300. Thus, P recognizes a $50 gain from its sale of S's stock for $200.

Example 3. Reorganizations. (a) *Facts.* P forms S with an $800 contribution, $200 of which is in exchange for S's preferred stock described in section 1504(a)(4) and the balance of which is for S's common stock. For Years 1 through 3, S has a total of $160 of ordinary income, $60 of which is distributed with respect to the preferred stock in satisfaction of its $20 annual preference as to dividends. Under this section, P's basis in S's preferred stock is unchanged, and its basis in S's common stock is increased from $600 to $700. To reduce its gain from an anticipated sale of S's preferred stock, P forms T at the close of Year 3 with a contribution of all of S's stock in exchange for corresponding common and preferred stock of T in a transaction to which section 351 applies. At the time of the contribution, the fair market value of the common stock is $700 and the fair market value of the preferred stock is $300 (due to a decrease in prevailing market interest rates). P subsequently sells T's preferred stock for $300.

(b) *Analysis.* Under section 358(b), P ordinarily has a $630 basis in T's common stock (70% of the $900 aggregate stock basis) and a $270 basis in T's preferred stock (30% of the $900 aggregate stock basis). However, because P transferred S's stock to T with a principal purpose to shift the allocation of basis adjustments under this section, adjustments are made under paragraph (e)(1) of this section to preserve the allocation under this section. Thus, P has a $700 basis in T's common stock and a $200 basis in T's preferred stock. Consequently, P recognizes a $100 gain from the sale of T's preferred stock.

Example 4. Post-deconsolidation basis adjustments. (a) *Facts.* For Year 1, the P group has $40 of taxable income when determined by including only S's items of income, gain, deduction, and loss taken into account, and P increases its basis in S's stock by $40 under paragraph (b) of this section. P anticipates that S will have a $40 ordinary loss for Year 2 that will be carried back and offset S's income in Year 1 and result in a $40 reduction to P's basis in S's stock for Year 2 under paragraph (b) of this section. With a principal purpose to avoid the reduction, P causes S to issue voting preferred stock that results in S becoming a nonmember at the beginning of Year 2. As anticipated, S has a $40 loss for Year 2, which is carried back to Year 1 and offsets S's income from Year 1.

(b) *Analysis.* Under paragraph (e)(1) of this section, because P caused S to become a nonmember with a principal purpose to absorb S's loss but avoid the corresponding negative adjustment under this section, and P bears a substantial portion of the loss because of its continued ownership of S common stock, the basis of P's common stock in S is decreased by $40 for Year 2. (If P has less than a $40 basis in the retained S stock, P must recognize income for Year 2 to the extent of the excess.) Section 1504(a)(3) limits the ability of S to subsequently rejoin the P group's consolidated return.

(c) *Carryback to pre-consolidation year.* The facts are the same as in paragraph (a) of this *Example 4*, except that P anticipates that S's loss will be carried back and absorbed in a separate return year of S before Year 1 (rather than to the P group's consolidated return

for Year 1). Although P causes S to become a nonmember with a principal purpose to avoid the negative adjustment under this section, and P bears a substantial portion of the loss because of its continued ownership of S common stock, both S's income and loss are taken into account under the separate return rules. Consequently, no one has acted with a principal purpose contrary to the purposes of this section, and no adjustments are necessary to carry out the purposes of this section.

Example 5. Pre-consolidation basis adjustments. (a) *Facts.* P forms S with a $100 contribution, and S becomes a member of the P affiliated group which does not file consolidated returns. For Years 1 through 3, S earns $300. P anticipates that it will elect under section 1501 for the P group to begin filing consolidated returns in Year 5. In anticipation of filing consolidated returns, and to avoid the negative stock basis adjustment that would result under paragraph (b) of this section from distributing S's earnings after Year 5, P causes S to distribute $300 during Year 4 as a qualifying dividend within the meaning of section 243(b). There is no plan or intention to recontribute the funds to S after the distribution.

(b) *Analysis.* Although S's distribution of $300 is with a principal purpose to avoid a corresponding negative adjustment under this section, the $300 was both earned and distributed entirely under the separate return rules. Consequently, P and S have not acted with a principal purpose contrary to the purposes of this section, and no adjustments are necessary to carry out the purposes of this section.

(f) *Predecessors and successors.* For purposes of this section, any reference to a corporation or to a share of stock includes a reference to a successor or predecessor as the context may require. A corporation is a successor if the basis of its assets is determined, directly or indirectly, in whole or in part, by reference to the basis of another corporation (the predecessor). For example, if T merges into S, S is treated, as the context may require, as a successor to T and as becoming a member of the group. A share is a successor if its basis is determined, directly or indirectly, in whole or in part, by reference to the basis of another share (the predecessor).

(g) *Recordkeeping.* Adjustments under this section must be reflected annually on permanent records (including work papers). See also section 6001, requiring records to be maintained. The group must be able to identify from these permanent records the amount and allocation of adjustments, including the nature of any tax-exempt income and noncapital, nondeductible expenses, so as to permit the application of the rules of this section for each year.

(h) *Effective date*—(1) *General rule.* Except as provided in paragraph (h)(8) of this section, this section applies with respect to determinations of the basis of the stock of a subsidiary (*e.g.*, for determining gain or loss from a disposition of stock), in consolidated return years beginning on or after January 1, 1995. If this section applies, basis must be determined or redetermined as if this section were in effect for all years (including, for example, the consolidated return years of another consolidated group to the extent adjustments from those years are still reflected). For example, if the portion of a consolidated net operating loss carryover attributable to S expired in 1990 and is treated as a noncapital, nondeductible expense under paragraph (b) of this section, it is taken into account in tax years beginning on or after January 1, 1995 as a negative adjustment for 1990. Any such determination or redetermination does not, however, affect any prior period. Thus, the negative adjustment for S's noncapital, nondeductible expense is not taken into account for tax years beginning before January 1, 1995.

(2) *Dispositions of stock before effective date*—(i) *In general.* If P disposes of stock of S in a consolidated return year beginning before January 1, 1995, the amount of P's income, gain, deduction, or loss, and the basis reflected in that amount, are not redetermined under this section. See § 1.1502–19 as contained in the 26 CFR part 1 edition revised as of April 1, 1994 for the definition of disposition, and paragraph (h)(5) of this section for the rules applicable to such dispositions.

(ii) *Lower-tier members.* Although P disposes of S's stock in a tax year beginning before January 1, 1995, S's determinations or adjustments with respect to the stock of a lower-tier member with which it continues to file a consolidated return are redetermined in accordance with the rules of this section (even if they were previously taken into account by P and reflected

in income, gain, deduction, or loss from the disposition of S's stock). For example, assume that P owns all of S's stock, S owns all of T's stock, and T owns all of U's stock. If S sells 80% of T's stock in a tax year beginning before January 1, 1995 (the effective date), the amount of S's income, gain, deduction, or loss from the sale, and the stock basis adjustments reflected in that amount, are not redetermined if P sells S's stock after the effective date. If S sells the remaining 20% of T's stock after the effective date, S's stock basis adjustments with respect to that T stock are also not redetermined because T became a nonmember before the effective date. However, if T and U continue to file a consolidated return with each other and T sells U's stock after the effective date, T's stock basis adjustments with respect to U's stock are redetermined (even though some of those adjustments may have been taken into account by S in its prior sale of T's stock before the effective date).

(iii) *Deferred amounts.* For purposes of this paragraph (h)(2), a disposition does not include a transaction to which §1.1502–13, §1.1502–13T, §1.1502–14, or §1.1502–14T applies. Instead, the transaction is deemed to occur as the income, gain, deduction, or loss (if any) is taken into account.

(3) *Distributions*—(i) *Deemed dividend elections.* If there is a deemed distribution and recontribution pursuant to §1.1502–32(f)(2) as contained in the 26 CFR part 1 edition revised as of April 1, 1994 in a consolidated return year beginning before January 1, 1995, the deemed distribution and recontribution under the election are treated as an actual distribution by S and recontribution by P as provided under the election.

(ii) *Affiliated earnings and profits.* This section does not apply to reduce the basis in S's stock as a result of a distribution of earnings and profits accumulated in separate return years, if the distribution is made in a consolidated return year beginning before January 1, 1995, and the distribution does not cause a negative adjustment under the investment adjustment rules in effect at the time of the distribution. See paragraph (h)(5) of this section for the rules in effect with respect to the distribution.

(4) *Expiring loss carryovers.* If S became a member of a consolidated group in a consolidated return year beginning before January 1, 1995, and S had a loss carryover from a separate return limitation year at that time, the group does not treat any expiration of the loss carryover (even if in a tax year beginning on or after January 1, 1995) as a noncapital, nondeductible expense resulting in a negative adjustment under this section. If S becomes a member of a consolidated group in a consolidated return year beginning on or after January 1, 1995, and S has a loss carryover from a separate return limitation year at that time, adjustments with respect to the expiration are determined under this section.

(5) *Prior law*—(i) *In general.* For prior determinations, see prior regulations under section 1502 as in effect with respect to the determination. See, e.g., §§1.1502–32 and 1.1502–32T as contained in the 26 CFR part 1 edition revised as of April 1, 1994.

(ii) *Continuing basis reductions for certain deconsolidated subsidiaries.* If a subsidiary ceases to be a member of a group in a consolidated return year beginning before January 1, 1995, and its basis was subject to reduction under §1.1502–32T or §1.1502–32(g) as contained in the 26 CFR part 1 edition revised as of April 1, 1994, its basis remains subject to reduction under those principles. For example, if S ceased to be a member in 1990, and P's basis in any retained S stock was subject to a basis reduction account, the basis remains subject to reduction. Similarly, if an election could be made to apply §1.1502–32T instead of §1.1502–32(g), the election remains available. However, §§1.1502–32T and 1.1502–32(g) do not apply as a result of a subsidiary ceasing to be a member in tax years beginning on or after January 1, 1995.

(6) *Loss suspended under §1.1502–35(c) or disallowed under §1.1502–35(g)(3)(iii).* Paragraphs (a)(2), (b)(3)(iii)(C), (b)(3)(iii)(D) and (b)(4)(vi) of this section are applicable on and after March 10, 2006. For rules applicable before March 10, 2006, see §1.1502–32T(h)(6) as contained in 26 CFR part 1 in effect on January 1, 2006.

(7) *Rules related to discharge of indebtedness income excluded from gross income.* Paragraphs (b)(1)(ii), (b)(3)(ii)(C)(*1*), (b)(3)(iii)(A), and (b)(5)(ii), *Example 4,* paragraphs (a), (b), and (c) of this section apply with respect to determinations of the basis of the stock of a subsidiary in consolidated return years the original return for which is due (without regard to extensions) after March 21, 2005. However, groups may apply those provisions with respect to determinations of the basis of the stock of a subsidiary in consolidated return years the original return for which is due (without regard to extensions) on or before March 21, 2005, and after August 29, 2003. For determinations of the basis of the stock of a subsidiary in consolidated return years the original return for which is due (without regard to extensions) on or before March 21, 2005, and after August 29, 2003, with respect to which a group chooses not to apply paragraphs (b)(1)(ii), (b)(3)(ii)(C)(*1*), (b)(3)(iii)(A), and (b)(5)(ii), *Example 4,* paragraphs (a), (b), and (c) of this section, see §1.1502–32T(b)(3)(ii)(C)(*1*), (b)(3)(iii)(A), and (b)(5)(ii), *Example 4,* paragraphs (a), (b), and (c) as contained in 26 CFR part 1 revised as of April 1, 2004.

(8) *Determination of stock basis in reorganization with boot.* Paragraph (b)(5)(ii) *Example 6* of this section applies only with respect to determinations of the basis of the stock of a subsidiary after January 26, 2006. For determinations of the basis of the stock of a subsidiary on or before January 26, 2006, see §1.1502–32(b)(5)(ii) *Example 6* as contained in the 26 CFR part 1 edition revised as of April 1, 2005.

[T.D. 8560, 59 FR 41685, Aug. 15, 1994, as amended by T.D. 8677, 61 FR 33323, June 27, 1996; T.D. 8560, 62 FR 12098, Mar. 14, 1997; T.D. 8823, 64 FR 36099, July 2, 1999; T.D. 8984, 67 FR 11040, Mar. 12, 2002; T.D. 9048, 68 FR 12291, Mar. 14, 2003; T.D. 9089, 68 FR 52495, Sept. 4, 2003; T.D. 9192, 70 FR 14410, Mar. 22, 2005; T.D. 9187, 70 FR 10325, Mar. 3, 2005; T.D. 9242, 71 FR 4275, Jan. 26, 2006; T.D. 9254, 71 FR 13009, 13018, Mar. 14, 2006]

§ 1.1502–33 Earnings and profits.

(a) *In general*—(1) *Purpose.* This section provides rules for adjusting the earnings and profits of a subsidiary (S) and any member (P) owning S's stock. These rules modify the determination of P's earnings and profits under applicable rules of law, including section 312, by adjusting P's earnings and profits to reflect S's earnings and profits for the period that S is a member of the consolidated group. The purpose for modifying the determination of earnings and profits is to treat P and S as a single entity by reflecting the earnings and profits of lower-tier members in the earnings and profits of higher-tier members and consolidating the group's earnings and profits in the common parent. References in this section to earnings and profits include deficits in earnings and profits.

(2) *Application of other rules of law.* The rules of this section are in addition to other rules of law. For example, the allowance for depreciation is determined in accordance with section 312(k). P's earnings and profits must not be adjusted under this section and other rules of law in a manner that has the effect of duplicating an adjustment. For example, if S's earnings and profits are reflected in P's earnings and profits under paragraph (b) of this section, and S transfers its assets to P in a liquidation to which section 332 applies, S's earnings and profits that P succeeds to under section 381 must be adjusted to prevent duplication.

(b) *Tiering up earnings and profits*—(1) *General rule.* P's earnings and profits are adjusted under this section to reflect changes in S's earnings and profits in accordance with the applicable principles of §1.1502–32, consistently applied, and an adjustment to P's earnings and profits for a tax year under this paragraph (b)(1) is treated as earnings and profits of P for the tax year in which the adjustment arises. Under these principles, for example, the adjustments are made as of the close of each consolidated return year, and as of any other time if a determination at that time is necessary to determine the earnings and profits of any person. Similarly, S's earnings and profits are allocated under the principles of §1.1502–32(c), and the adjustments are applied in the order of the tiers, from the lowest to the highest. However, modifications to the principles include:

(i) The amount of P's adjustment is determined by reference to S's earnings and profits, rather than S's taxable and

tax-exempt items (and therefore, for example, the deferral of a negative adjustment for S's unabsorbed losses does not apply).

(ii) The tax sharing rules under paragraph (d) of this section apply rather than those of § 1.1502–32(b)(3)(iv)(D).

(2) *Affiliated earnings and profits.* The reduction in S's earnings and profits under section 312 from a distribution of earnings and profits accumulated in separate return years of S that are not separate return limitation years does not tier up to P's earnings and profits. Thus, the increase in P's earnings and profits under section 312 from receipt of the distribution is not offset by a corresponding reduction.

(3) *Examples*—(i) *In general.* For purposes of the examples in this section, unless otherwise stated, P owns all of the only class of S's stock, the stock is owned for the entire year, S owns no stock of lower-tier members, the tax year of all persons is the calendar year, all persons use the accrual method of accounting, the facts set forth the only corporate activity, preferred stock is described in section 1504(a)(4), all transactions are between unrelated persons, and tax liabilities are disregarded.

(ii) *Tiering up earnings and profits.* The principles of this paragraph (b) are illustrated by the following examples.

Example 1. Tier-up and distribution of earnings and profits. (a) *Facts.* P forms S in Year 1 with a $100 contribution. S has $100 of earnings and profits for Year 1 and no earnings and profits for Year 2. During Year 2, S declares and distributes a $50 dividend to P.

(b) *Analysis.* Under paragraph (b)(1) of this section, S's $100 of earnings and profits for Year 1 increases P's earnings and profits for Year 1. P has no additional earnings and profits for Year 2 as a result of the $50 distribution in Year 2, because there is a $50 increase in P's earnings and profits as a result of the receipt of the dividend and a corresponding $50 decrease in S's earnings and profits under section 312(a) that is reflected in P's earnings and profits under paragraph (b)(1) of this section.

(c) *Distribution of current earnings and profits.* The facts are the same as in paragraph (a) of this *Example 1,* except that S distributes the $50 dividend at the end of Year 1 rather than during Year 2. Under paragraph (b)(1) of this section, P's earnings and profits are increased by $100 (S's $50 of undistributed earnings and profits, plus P's receipt of the $50 distribution). Thus, S's earnings and profits increase by $50 and P's earnings and profits increase by $100.

(d) *Affiliated earnings and profits.* The facts are the same as in paragraph (a) of this *Example 1,* except that P and S do not begin filing consolidated returns until Year 2. Because P and S file separate returns for Year 1, P's basis in S's stock remains $100 under § 1.1502–32 and this section, S has $100 of earnings and profits, and none of S's earnings and profits is reflected in P's earnings and profits under paragraph (b) of this section. S's distribution in Year 2 ordinarily would reduce S's earnings and profits but not increase P's earnings and profits. (P's $50 of earnings and profits from the dividend would be offset by S's $50 reduction in earnings and profits that tiers up under paragraph (b) of this section.) However, under paragraph (b)(2) of this section, the negative adjustment for S's distribution to P does not apply. Thus, S's distribution reduces its earnings and profits by $50 but increases P's earnings and profits by $50. (If S's earnings and profits had been accumulated in a separate return limitation year, paragraph (b)(2) of this section would not apply and the distribution would reduce S's earnings and profits but not increase P's earnings and profits.)

(e) *Earnings and profits deficit.* Assume instead that after P forms S in Year 1 with a $100 contribution, S borrows additional funds and has a $150 deficit in earnings and profits for Year 1. The corresponding loss for tax purposes is not absorbed in Year 1, and is included in the group's consolidated net operating loss carried forward to Year 2. Under paragraph (b)(1) of this section, however, S's $150 deficit in earnings and profits decreases P's earnings and profits for Year 1 by $150. (Absorption of the loss in a later tax year has no effect on the earnings and profits of P and S.)

Example 2. Section 355 distribution. (a) *Facts.* P owns all of S's stock and S owns all of T's stock. For Year 1, T has $100 of earnings and profits. Under paragraph (b)(1) of this section, the earnings and profits of T tier up to S and to P. S and P have no other earnings and profits for Year 1. S distributes T's stock to P at the end of Year 1 in a distribution to which section 355 applies.

(b) *Analysis.* Because S's distribution of T's stock is a distribution to which section 355 applies, the applicable principles of § 1.1502–32(b)(2)(iv) do not require P's earnings and profits to be adjusted by reason of the distribution. In addition, although S's earnings and profits may be reduced under section 312(h) as a result of the distribution, the applicable principles of § 1.1502–32(b)(3)(iii) do not require P's earnings and profits to be adjusted to reflect this reduction in S's earnings and profits.

Example 3. Allocating earnings and profits among shares. P owns 80% of S's stock throughout Year 1. For Year 1, S has $100 of

earnings and profits. Under paragraph (b)(1) of this section, $80 of S's earnings and profits is allocated to P based on P's ownership of S's stock. Accordingly, $80 of S's earnings and profits for Year 1 is reflected in P's earnings and profits for Year 1.

(c) *Special rules.* For purposes of this section—

(1) *Stock of members.* For purposes of determining P's earnings and profits from the disposition of S's stock, P's basis in S's stock is adjusted to reflect S's earnings and profits determined under paragraph (b) of this section, rather than under § 1.1502–32. For example, P's basis in S's stock is increased by positive earnings and profits and decreased by deficits in earnings and profits. Similarly, P's basis in S's stock is not reduced for distributions to which paragraph (b)(2) of this section applies (affiliated earnings and profits). P may have an excess loss account in S's stock for earnings and profits purposes (whether or not there is an excess loss account under § 1.1502–32), and the excess loss account is determined, adjusted, and taken into account in accordance with the principles of §§ 1.1502–19 and 1.1502–32.

(2) *Intercompany transactions.* Intercompany items and corresponding items are not reflected in earnings and profits before they are taken into account under § 1.1502–13. See § 1.1502–13 for the applicable rules and definitions.

(3) *Example.* The principles of this paragraph (c) are illustrated by the following example.

Example. Adjustments to stock basis. (a) *Facts.* P forms S in Year 1 with a $100 contribution. For Year 1, S has $75 of taxable income and $100 of earnings and profits. For Year 2, S has no taxable income or earnings and profits, and S declares and distributes a $50 dividend to P. P sells all of S's stock for $150 at the end of Year 2.

(b) *Analysis.* Under paragraph (c)(1) of this section, P's basis in S's stock for earnings and profits purposes immediately before the sale is $150 (the $100 initial basis, plus S's $100 of earnings and profits for Year 1, minus the $50 distribution of earnings and profits in Year 2). Thus, P recognizes no gain or loss from the sale of S's stock for earnings and profits purposes.

(c) *Earnings and profits deficit.* Assume instead that S has a $100 tax loss and earnings and profits deficit for Year 1. The tax loss is not absorbed in Year 1 and is included in the group's consolidated net operating loss carried forward to Year 2. Under paragraph (b) of this section, S's $100 deficit in earnings and profits decreases P's earnings and profits for Year 1. Under paragraph (c) of this section, P decreases its basis in S's stock for purposes of determining earnings and profits from $100 to $0. (If S had borrowed an additional $50 that it also lost in Year 1, P would have decreased its earnings and profits for Year 1 by the additional $50, and P would have had a $50 excess loss account in S's stock for earnings and profits purposes, which would be taken into account in determining P's earnings and profits from its sale of S's stock.)

(d) *Affiliated earnings and profits.* Assume instead that P and S do not begin filing consolidated returns until Year 2. Under paragraph (b) of this section, the negative adjustment under § 1.1502–32(b) for distributions does not apply to S's distribution of earnings and profits accumulated in a separate return year that is a not separate return limitation year. Thus, P's basis in S's stock for earnings and profits purposes remains $100, and P has $50 of earnings and profits from the sale of S's stock.

(d) *Federal income tax liability*—(1) *In general*—(i) *Extension of tax allocations.* Section 1552 allocates the tax liability of a consolidated group among its members for purposes of determining the amounts by which their earnings and profits are reduced for taxes. Section 1552 does not reflect the absorption by one member of another member's tax attributes (e.g., losses, deductions and credits). For example, if P's $100 of income is offset by S's $100 of deductions, consolidated tax liability is $0 and no amount is allocated under section 1552. However, the group may elect under this paragraph (d) to allocate additional amounts to reflect the absorption by one member of the tax attributes of another member. Permissible methods are set forth in paragraphs (d)(2) through (4) of this section, and election procedures are provided in paragraph (d)(5) of this section. Allocations under this paragraph (d) must be reflected annually on permanent records (including work papers). Any computations of separate return tax liability are subject to the principles of section 1561.

(ii) *Effect of extended tax allocations.* The amounts allocated under this paragraph (d) are treated as allocations of tax liability for purposes of § 1.1552–

1(b)(2). For example, if P's taxable income is offset by S's loss, and tax liability is allocated under the percentage method of paragraph (d)(3) of this section, P's earnings and profits are reduced as if its income were subject to tax, P is treated as liable to S for the amount of the tax, and corresponding adjustments are made to S's earnings and profits. If the liability of one member to another is not paid, the amount not paid generally is treated as a distribution, contribution, or both, depending on the relationship between the members.

(2) *Wait-and-see method.* The wait-and-see method under this paragraph (d)(2) is derived from Securities and Exchange Commission procedures. In the year that a member's tax attribute is absorbed, the group's consolidated tax liability is allocated in accordance with the group's method under section 1552. When, in effect, the member with the tax attribute could have absorbed the attribute on a separate return basis in a later year, a portion of the group's consolidated tax liability for the later year that is otherwise allocated to members under section 1552 is reallocated. The reallocation takes into account all consolidated return years to which this paragraph (d) applies (the computation period), and is determined by comparing the tax allocated to a member during the computation period with the member's tax liability determined as if it had filed separate returns during the computation period.

(i) *Cap on allocation under section 1552.* A member's allocation under section 1552 for a tax year may not exceed the excess, if any, of—

(A) The total of the tax liabilities of the member for the computation period (including the current year), determined as if the member had filed separate returns; over

(B) The total amount allocated to the member under section 1552 and this paragraph (d) for the computation period (except the current year).

(ii) *Reallocation of capped amounts.* To the extent that the amount allocated to a member under section 1552 exceeds the limitation under paragraph (d)(2)(i) of this section, the excess is allocated among the remaining members in proportion to (but not to exceed the amount of) each member's excess, if any, of—

(A) The total of the tax liabilities of the member for the computation period (including the current year), determined as if the member had filed separate returns; over

(B) The total amount allocated to the member under section 1552 and this paragraph (d) for the computation period (including for the current year only the amount allocated under section 1552).

(iii) *Reallocation of excess capped amounts.* If the reductions under paragraph (d)(2)(i) of this section exceed the amounts allocable under paragraph (d)(2)(ii) of this section, the excess is allocated among the members in accordance with the group's method under section 1552 without taking this paragraph (d)(2) into account.

(3) *Percentage method.* The percentage method under this paragraph (d)(3) allocates tax liability based on the absorption of tax attributes, without taking into account the ability of any member to subsequently absorb its own tax attributes. The allocation under this method is in addition to the allocation under section 1552.

(i) *Decreased earnings and profits.* A member's allocation under section 1552 for any year is increased, thereby decreasing its earnings and profits, by a fixed percentage (not to exceed 100%) of the excess, if any, of—

(A) The member's separate return tax liability for the consolidated return year as determined under § 1.1552–1(a)(2)(ii); over

(B) The amount allocated to the member under section 1552.

(ii) *Increased earnings and profits.* An amount equal to the total decrease in earnings and profits under paragraph (d)(3)(i) of this section (including amounts allocated as a result of a carryback) increases the earnings and profits of the members whose attributes are absorbed, and is allocated among them in a manner that reasonably reflects the absorption of the tax attributes.

(4) *Additional methods.* The absorption by one member of the tax attributes of another member may be reflected under any other method approved in writing by the Commissioner.

(5) *Election of allocation method*—(i) *In general.* Tax liability may be allocated under this paragraph (d) only if an election is filed with the group's first return. The election must—

(A) Be made in a separate statement entitled ''ELECTION TO ALLOCATE TAX LIABILITY UNDER §1.1502–33(d)'';

(B) State the allocation method elected under §1.1502–33(d) and under section 1552;

(C) If the percentage method is elected, state the percentage (not to exceed 100%) to be used; and

(D) If a method is permitted under paragraph (d)(4) of this section, attach evidence of approval of the method by the Commissioner.

(ii) *Consent*—(A) *Electing or changing methods.* An election for a later year, or an election to change methods, may be made only with the written consent of the Commissioner.

(B) *Prior law elections.* An election in effect for the last tax year beginning before January 1, 1995, remains in effect under this section. However, a group may elect to conform its earnings and profits computations to the method described in §1.1502–32(b)(3)(iv)(D) (the percentage method, using a 100% allocation), whether or not it has previously made an election for earnings and profits purposes. If a conforming election is made, the group must make all adjustments necessary to prevent amounts from being duplicated or omitted. The conforming election is made by attaching a statement entitled ''ELECTION TO CONFORM TAX ALLOCATIONS UNDER §§1.1502–32 and 1.1502–33(d)'' to the consolidated group's return for its first tax year beginning on or after January 1, 1995. The statement must be signed by the common parent, and must specify whether the method is conformed only for years beginning on or after January 1, 1995 or as if the method were in effect for all prior years. The statement must also describe the adjustments made by reason of the change (e.g., to reflect prior use of earnings and profits).

(6) *Examples.* The principles of this paragraph (d) are illustrated by the following examples.

Example 1. Wait-and-see method. (a) *Facts.* P owns all of the stock of S1 and S2. The P group uses the wait-and-see method of allocation under paragraph (d)(2) of this section in conjunction with §1.1552–1(a)(1). For Year 1, each member's taxable income, both for purposes of §1.1552–1(a)(1) and redetermined as if the member had filed separate returns, is as follows: P $0, S1 $2,000, and S2 ($1,000). Thus, the P group's consolidated tax liability for Year 1 is $340 (assuming a 34% tax rate).

(b) *Analysis.* Under §1.1552–1(a)(1)(i), the tax liability of the P group is allocated among the members in accordance with the portion of the consolidated taxable income attributable to each member having taxable income. Thus, all of the P group's $340 consolidated tax liability is allocated to S1. As a result, S1 decreases its earnings and profits under section 1552 by $340 (even if S1 does not pay the tax liability). No further allocations are made under paragraph (d)(2) of this section because S2 cannot yet absorb its loss on a separate return basis.

(c) *Payment of tax liability.* If S1 pays the $340 tax liability, there is no further effect on the income, earnings and profits, or stock basis of any member. If P pays the $340 tax liability (and the payment is not a loan from P to S1), P is treated as making a $340 contribution to the capital of S1; if S2 pays the $340 tax liability (and the payment is not a loan from S2 to S1), S2 is treated as making a $340 distribution to P with respect to its stock, and P is treated as making a $340 contribution to the capital of S1. See §1.1552–1(b)(2).

(d) *Year 2.* For Year 2, each member's taxable income, under §1.1552–1(a)(1)(ii) and redetermined as if the member had filed separate returns, without taking into account any carryover from Year 1, is as follows: P $0, S1 $1,000, and S2 $3,000. Thus, the P group's consolidated tax liability for Year 2 is $1,360 (assuming a 34% tax rate). Of this amount, section 1552 would allocate $340 to S1 and $1,020 to S2. However, under paragraph (d)(2)(i) of this section, no more than $680 may be allocated to S2. This is because S2 would have had an aggregate tax liability of $680 if it had filed separate returns for Years 1 and 2 (a $0 tax liability for Year 1, and a $680 tax liability for Year 2, taking into account a $1,000 net operating loss carryover from Year 1). Under paragraph (d)(2)(ii) of this section, the entire excess of $340 which would otherwise be allocated to S2 under §1.1552–1(a)(1) is allocated to S1. This is because S1 would have had an additional $340 of aggregate tax liability if it had filed separate returns for Years 1 and 2 (a $680 tax liability for Year 1, and a $340 tax liability for Year 2, not taking into account S2's $1,000 net operating loss for Year 1). The effect of the allocation of $680 to S1 and $680 to S2 is determined under §1.1552–1(b)(2).

Example 2. Percentage method. (a) *Facts.* The facts are the same as in *Example 1,* but the P

group uses the percentage method of allocation under paragraph (d)(3) of this section, with a percentage of 100%. In addition, the taxable incomes and losses of the members are the same if computed as provided in § 1.1552–1(a)(2)(ii).

(b) *Analysis.* Under § 1.1552–1(a)(2)(ii), $340 of tax liability is allocated to S1 for Year 1. Under paragraph (d)(3)(i) of this section, S1 is allocated another $340 of tax liability because S1 would have had a $680 tax liability if it had filed separate returns but only $340 is allocated to S1 under section 1552. Thus, S1's earnings and profits are decreased by the $680 total. Under paragraph (d)(3)(ii) of this section, S2's earnings and profits are increased by $340 because the additional $340 allocated to S1 under paragraph (d)(3)(i) of this section is attributable to the absorption of S2's losses.

(c) *Payment of tax liability.* If S1 pays the $340 tax liability of the P group and pays $340 to S2, the Year 1 tax liability results in no further adjustments to the income, earnings and profits, or basis of any member's stock. If S1 pays the $340 tax liability of the P group and pays the other $340 to P instead of S2 because, for example, of an agreement among the members, S2 is treated as distributing $340 to P with respect to its stock in the year that S1 makes the payment to P. See § 1.1552–1(b)(2).

(d) *Year 2.* For Year 2, $340 is allocated to S1 and $1,020 is allocated to S2 under section 1552. No additional amounts are allocated under paragraph (d)(3) of this section.

(e) *Deconsolidations*—(1) *In general.* Immediately before it becomes a nonmember, S's earnings and profits are eliminated to the extent they were taken into account by any member under this section. If S's earnings and profits are eliminated under this paragraph (e)(1), no corresponding adjustment is made to the earnings and profits of P (or any other member) under paragraph (b) of this section or to any basis in a member's stock under paragraph (c) of this section. For this purpose, S is treated as becoming a nonmember on the first day of its first separate return year (including another group's consolidated return year).

(2) *Acquisition of group*—(i) *Application.* This paragraph (e)(2) applies only if a consolidated group (the terminating group) ceases to exist as a result of—

(A) The acquisition by a member of another consolidated group of either the assets of the common parent of the terminating group in a reorganization described in section 381(a)(2), or the stock of the common parent of the terminating group; or

(B) The application of the principles of § 1.1502–75(d)(2) or (d)(3).

(ii) *General rule.* Paragraph (e)(1) of this section does not apply solely by reason of the termination of a group because it is acquired, if there is a surviving group that is, immediately thereafter, a consolidated group. Instead, the surviving group is treated as the terminating group for purposes of applying this paragraph (e) to the terminating group. This treatment does not apply, however, to members of the terminating group that are not members of the surviving consolidated group immediately after the terminating group ceases to exist (e.g., under section 1504(a)(3) relating to reconsolidation, or section 1504(c) relating to includible insurance companies).

(3) *Certain corporate separations and reorganizations.* The adjustments under paragraph (e)(1) of this section must be modified to the extent necessary to effectuate the principles of section 312(h). Thus, P's earnings and profits rather than S's earnings and profits may be eliminated immediately before S becomes a nonmember. P's earnings and profits are eliminated to the extent that its earnings and profits reflect S's earnings and profits after applying section 312(h) immediately after S becomes a nonmember (determined without taking this paragraph (e) into account).

(4) *Special uses of earnings and profits.* Paragraph (e)(1) of this section does not apply for purposes of determining—

(i) The extent to which a distribution is charged to reserve accounts under section 593(e);

(ii) The extent to which a distribution is taxable to the recipient under sections 805(a)(4) and 832; and

(iii) Any other special use identified in guidance published in the Internal Revenue Bulletin.

(5) *Example.* The principles of this paragraph (e) are illustrated by the following example.

Example. (a) *Facts.* Individuals A and B own all of P's stock, and P owns all of the stock of S and T, each with a $500 basis. For Year 1, S has $100 of earnings and profits and T has $50 of earnings and profits. Under paragraph (b)(1) of this section, the earnings and

profits of S and T tier up to P, and P has $150 of earnings and profits for Year 1. P sells all of S's stock for $600 at the close of Year 1.

(b) *Analysis.* Under paragraph (e)(1) of this section, S's $100 of earnings and profits is eliminated immediately before S becomes a nonmember because the earnings and profits are taken into account under paragraph (b) of this section in P's earnings and profits. However, no corresponding adjustment is made to P's earnings and profits or to P's basis in S's stock for purposes of earnings and profits. P's earnings and profits for Year 1 remain $150 following the sale of S's stock.

(c) *Forward merger.* The facts are the same as in paragraph (a) of this *Example,* except that, rather than P selling S's stock, S merges into a nonmember in a transaction described in section 368(a)(2)(D). Under paragraph (h) of this section, the nonmember is treated as a successor to S. Thus, as in paragraph (b) of this *Example,* S's $100 of earnings and profits is eliminated immediately before S ceases to be a member.

(d) *Acquisition of entire group.* The facts are the same as in paragraph (a) of this *Example,* except that X, the common parent of another consolidated group, purchases all of P's stock at the close of Year 1, and P sells S's stock during Year 3. Under paragraph (e)(2) of this section, the earnings and profits of S and T are not eliminated as a result of X purchasing P's stock. However, S's earnings and profits from consolidated return years of both the P group and the X group are eliminated immediately before S becomes a nonmember of the X group.

(e) *Earnings and profits deficit.* The facts are the same as in paragraph (d) of this *Example,* except that S has a $550 deficit in earnings and profits for Year 1. The effect of paragraph (e)(1) of this section is the same. Under paragraph (c)(1) of this section, P would have an excess loss account in S's stock for earnings and profits purposes under the principles of §§ 1.1502–19 and 1.1502–32, and, under the principles of § 1.1502–19(c)(2), the excess loss account is not taken into account as a result of X's purchase of P's stock. Under paragraph (e)(2) of this section, S's deficit is not eliminated under paragraph (e)(1) of this section immediately before X's purchase of P's stock. However, S's earnings and profits (or deficit) is eliminated immediately before S becomes a nonmember of the X group.

(f) *Section 355 distribution.* The facts are the same as in paragraph (a) of this *Example,* except that, rather than selling S's stock, P distributes S's stock to A at the close of Year 1 in a distribution to which section 355 applies. Under paragraph (e)(3) of this section, P's earnings and profits may be reduced under section 312(h) as a result of the distribution. To the extent that P's earnings and profits are reduced, S's earnings and profits are not eliminated under paragraph (e)(1) of this section.

(f) *Changes in the structure of the group*—(1) *Changes in the common parent*—(i) *General rule.* If P succeeds another corporation under the principles of § 1.1502–75(d) (2) or (3) as the common parent of a consolidated group (a group structure change), the earnings and profits of P are adjusted immediately after P becomes the new common parent to reflect the earnings and profits of the former common parent immediately before the former common parent ceases to be the common parent. The adjustment is made as if P succeeds to the earnings and profits of the former common parent in a transaction described in section 381(a). See § 1.1502–31 for the basis of the stock of members following a group structure change.

(ii) *Minority shareholders.* If the former common parent's stock is not wholly owned by members of the consolidated group immediately after the former common parent ceases to be the common parent, appropriate adjustments must be made to reflect in the new common parent only an allocable part of the former common parent's earnings and profits.

(iii) *Higher-tier members.* To the extent that earnings and profits are adjusted under this paragraph (f)(1), and the former common parent is owned by members other than P, the earnings and profits of the intermediate subsidiaries must be adjusted in accordance with the principles of this section.

(iv) *Example.* The principles of this paragraph (f)(1) are illustrated by the following example.

Example. (a) *Facts.* X is the common parent of a consolidated group with $100 of earnings and profits, and P is the common parent of another consolidated group with $20 of earnings and profits. P acquires all of X's stock at the close of Year 1 in exchange for 70% of P's stock. The exchange is a reverse acquisition under § 1.1502–75(d)(3), and the X group is treated as remaining in existence with P as its new common parent.

(b) *Adjustments for X group earnings and profits.* Under paragraph (f)(1) of this section, P's earnings and profits are adjusted immediately after P becomes the new common parent, to reflect X's $100 of earnings and profits immediately before X ceases to be the common parent. The adjustment is made as if P succeeds to X's earnings and profits in a transaction described in section 381(a). Thus, immediately after the acquisition, P has $120 of accumulated earnings and profits and X

continues to have $100 of accumulated earnings and profits.

(c) *Adjustments for P group earnings and profits.* Although the P group terminates on P's acquisition of X's stock, under paragraph (e)(2) of this section, no adjustments are made to the earnings and profits of any subsidiaries in the terminating P group.

(d) *Acquisition of separate return corporation.* The facts are the same as in paragraph (a) of this *Example,* except that, immediately before the acquisition of its stock by P, X is not affiliated with any other corporation. The exchange is a reverse acquisition under § 1.1502–75(d)(3), and P is treated as the common parent of the X group. Consequently, the results are the same as in paragraphs (b) and (c) of this *Example.*

(2) *Change in the location of subsidiaries.* If the location of a member within a group changes, appropriate adjustments must be made to the earnings and profits of the members to prevent the earnings and profits from being eliminated. For example, if P transfers all of S's stock to another member in a transaction to which section 351 and § 1.1502–13 apply, the transferee's earnings and profits are adjusted immediately after the transfer to reflect S's earnings and profits immediately before the transfer from consolidated return years. On the other hand, if the transferee purchases S's stock from P, the transferee's earnings and profits are not adjusted.

(g) *Anti-avoidance rule.* If any person acts with a principal purpose contrary to the purposes of this section, to avoid the effect of the rules of this section or apply the rules of this section to avoid the effect of any other provision of the consolidated return regulations, adjustments must be made as necessary to carry out the purposes of this section.

(h) *Predecessors and successors.* For purposes of this section, any reference to a corporation or to a share includes a reference to a successor or predecessor as the context may require. A corporation is a successor if its earnings and profits are determined, directly or indirectly, in whole or in part, by reference to the earnings and profits of another corporation (the predecessor). A share is a successor if its basis is determined, directly or indirectly, in whole or in part, by reference to the basis of another share (the predecessor).

(i) [Reserved]

(j) *Effective date*—(1) *General rule.* This section applies with respect to determinations of the earnings and profits of a member (e.g., for purposes of a characterizing a distribution to which section 301 applies) in consolidated return years beginning on or after January 1, 1995. If this section applies, earnings and profits must be determined or redetermined as if this section were in effect for all years (including, for example, the consolidated return years of another consolidated group to the extent the earnings and profits from those years are still reflected). For example, if a distribution by P to a nonmember shareholder in 1990 was a dividend because of an unabsorbed loss carryover attributable to S, P's earnings and profits in tax years beginning after January 1, 1995 are redetermined by taking into account a negative adjustment in the tax year S's loss arose and in 1990 for P's distribution, and any subsequent absorption of the loss has no effect on earnings and profits. Any such determination or redetermination does not, however, affect any prior period. Thus, the shareholder's treatment in 1990 of the distribution as a dividend (and the effect of the distribution on stock basis) is not redetermined under this section.

(2) *Dispositions of stock before effective date*—(i) *In general.* If P disposes of stock of S in a consolidated return year beginning before January 1, 1995, the amount of P's earnings and profits with respect to S are not redetermined under paragraph (j)(1) of this section. See § 1.1502–19 as contained in the 26 CFR part 1 edition revised as of April 1, 1994 for the definition of disposition, and paragraph (j)(5) of this section for the rules applicable to such dispositions.

(ii) *Lower-tier members.* Although P disposes of S's stock in a tax year beginning before January 1, 1995, S's determinations or adjustments with respect to lower-tier members with which it continues to file a consolidated return are redetermined in accordance with the rules of this section (even if S's earnings and profits were previously taken into account by P). For example, assume that P owns all of S's stock, S owns all of T's stock, and

T owns all of U's stock. If S sells 80% of T's stock in a tax year beginning before January 1, 1995 (the effective date), the amount of S's earnings and profits from the sale, and the adjustments to stock basis for earnings and profits purposes that are reflected in that amount, are not redetermined if P sells S's stock after the effective date. If S sells the remaining 20% of T's stock after the effective date, S's stock basis adjustments with respect to that T stock are also not redetermined because T became a nonmember before the effective date. However, if T and U continue to file a consolidated return with each other, paragraph (e)(1) of this section did not apply, and T sells U's stock after the effective date, T's earnings and profits with respect to U are redetermined (even though some of the earnings and profits may have been taken into account by S in its prior sale of T's stock before the effective date).

(iii) *Deferred amounts.* For purposes of this paragraph (j)(2), a disposition does not include a transaction to which §1.1502–13, §1.1502–13T, §1.1502–14, or §1.1502–14T applies. Instead, the transaction is deemed to occur as the earnings and profits (if any) are taken into account.

(3) *Deconsolidations and group structure changes*—(i) *In general.* Paragraphs (e) and (f) of this section apply with respect to deconsolidations and group structure changes occurring in consolidated return years beginning on or after January 1, 1995.

(ii) *Prior period group structure changes.* If there was a group structure change in a consolidated return year beginning before January 1, 1995, and earnings and profits were not determined under §1.1502–33T(a) as contained in the 26 CFR part 1 edition revised as of April 1, 1994, a distribution in a tax year ending after September 7, 1988, of earnings and profits that are not reflected in the earnings and profits of the distributee member, but would have been so reflected if §1.1502–33T(a) as contained in the 26 CFR part 1 edition revised as of April 1, 1994 had applied, the negative adjustment under paragraph (b) of this section for distributions does not apply (and there is therefore no offset to the increase in the earnings and profits of the distributee).

(4) *Deemed dividend elections.* If there is a deemed distribution and recontribution pursuant to §1.1502–32(f)(2) as contained in the 26 CFR part 1 edition revised as of April 1, 1994 in a consolidated return year beginning before January 1, 1995, the deemed distribution and recontribution under the election are treated as an actual distribution by S and recontribution by P as provided under the election.

(5) *Prior law.* For prior determinations, see prior regulations under section 1502 as in effect with respect to the determination. See, e.g., §§1.1502–33 and 1.1502–33T as contained in the 26 CFR part 1 edition revised as of April 1, 1994.

[T.D. 8560, 59 FR 41695, Aug. 15, 1994, as amended by T.D. 8597, 60 FR 36710, July 18, 1995]

§1.1502–34 Special aggregate stock ownership rules.

For purposes of §§1.1502–1 through 1.1502–80, in determining the stock ownership of a member of a group in another corporation (the ''issuing corporation'') for purposes of determining the application of section 165(g)(3)(A), 332(b)(1), 333(b), 351(a), 732(f), or 904(f), in a consolidated return year, there shall be included stock owned by all other members of the group in the issuing corporation. Thus, assume that members A, B, and C each own 33⅓ percent of the stock issued by D. In such case, A, B, and C shall each be treated as meeting the 80-percent stock ownership requirement for purposes of section 332, and no member can elect to have section 333 apply. Furthermore, the special rule for minority shareholders in section 337(d) cannot apply with respect to amounts received by A, B, or C in liquidation of D.

[T.D. 6894, 31 FR 11794, Sept. 8, 1966, as amended by T.D. 8949, 66 FR 32902, June 19, 2001]

§1.1502–35 Transfers of subsidiary stock and deconsolidations of subsidiaries.

(a) *Purpose.* The purpose of this section is to prevent a group from obtaining more than one tax benefit from a single economic loss. The provisions of

this section shall be construed in a manner consistent with that purpose and in a manner that reasonably carries out that purpose.

(b) *Redetermination of basis on certain nondeconsolidating transfers of subsidiary stock and on certain deconsolidations of subsidiaries*—(1) *Redetermination of basis on certain nondeconsolidating transfers of subsidiary stock.* Except as provided in paragraph (b)(3)(i) of this section, if, immediately after a transfer of stock of a subsidiary that has a basis that exceeds its value, the subsidiary remains a member of the group, then the basis in each share of subsidiary stock owned by each member of the group shall be redetermined in accordance with the provisions of this paragraph (b)(1) immediately before such transfer. All of the members' bases in the shares of subsidiary stock immediately before such transfer shall be aggregated. Such aggregated basis shall be allocated first to the shares of the subsidiary's preferred stock that are owned by the members of the group immediately before such transfer, in proportion to, but not in excess of, the value of those shares at such time. After allocation of the aggregated basis to all shares of the preferred stock of the subsidiary pursuant to the preceding sentence, any remaining basis shall be allocated among all common shares of subsidiary stock held by members of the group immediately before the transfer, in proportion to the value of such shares at such time.

(2) *Redetermination of basis on certain deconsolidations of subsidiaries*—(i) *Allocation of reallocable basis amount.* Except as provided in paragraph (b)(3)(ii) of this section, if, immediately before a deconsolidation of a subsidiary, any share of stock of such subsidiary owned by a member of the group has a basis that exceeds its value, then the basis in each share of the subsidiary's stock owned by each member of the group shall be redetermined in accordance with the provisions of this paragraph (b)(2) immediately before such deconsolidation. The basis in each share of the subsidiary's stock held by members of the group immediately before the deconsolidation that has a basis in excess of value at such time shall be reduced, but not below such share's value, in a manner that, to the greatest extent possible, causes the ratio of the basis to the value of each such share to be the same; provided, however, that the aggregate amount of such reduction shall not exceed the reallocable basis amount (as computed pursuant to paragraph (b)(2)(ii) of this section). Then, to the extent of the reallocable basis amount, the basis of each share of the preferred stock of the subsidiary that are held by members of the group immediately before the deconsolidation shall be increased, but not above such share's value, in a manner that, to the greatest extent possible, causes the ratio of the basis to the value of each such share to be the same. Then, to the extent that the reallocable basis amount does not increase the basis of shares of preferred stock of the subsidiary pursuant to the third sentence of this paragraph (b)(2)(i), such amount shall increase the basis of all common shares of the subsidiary's stock held by members of the group immediately before the deconsolidation in a manner that, to the greatest extent possible, causes the ratio of the basis to the value of each such share to be the same.

(ii) *Calculation of reallocable basis amount.* The reallocable basis amount shall equal the lesser of—

(A) The aggregate of all amounts by which, immediately before the deconsolidation, the basis exceeds the value of a share of subsidiary stock owned by any member of the group at such time; and

(B) The total of the subsidiary's (and any predecessor's) items of deduction and loss, and the subsidiary's (and any predecessor's) allocable share of items of deduction and loss of all lower-tier subsidiaries, that were taken into account in computing the adjustment under § 1.1502–32 to the bases of shares of stock of the subsidiary (and any predecessor) held by members of the group immediately before the deconsolidation, other than shares that have bases in excess of value immediately before the deconsolidation.

(3) *Exceptions to application of redetermination rules.* (i) Paragraph (b)(1) of this section shall not apply to a transfer of subsidiary stock if—

(A) During the taxable year of such transfer, in one or more fully taxable transactions, the members of the group dispose of all of the shares of the subsidiary stock that they own immediately before the transfer, other than the shares the transfer of which would otherwise trigger the application of paragraph (b)(1) of this section, to a person or persons that are not members of the group;

(B) During the taxable year of such transfer, the members of the group are allowed a worthless stock loss under section 165(g) (taking into account the provisions of § 1.1502–80(c)) with respect to all of the shares of subsidiary stock that they own immediately before the transfer, other than the shares the transfer of which would otherwise trigger the application of paragraph (b)(1) of this section; or

(C) Such transfer is to a member of the group and section 332 (provided the stock is transferred to an 80-percent distributee), section 351, section 354, or section 361 applies to such transfer.

(ii) Paragraph (b)(2) of this section shall not apply to a deconsolidation of a subsidiary if—

(A) During the taxable year of such deconsolidation, in one or more fully taxable transactions, the members of the group dispose of all of the shares of the subsidiary stock that they own immediately before the deconsolidation to a person or persons that are not members of the group;

(B) Such deconsolidation results from a fully taxable disposition, to a person or persons that are not members of the group, of some of the shares of the subsidiary, and, during the taxable year of such deconsolidation, the members of the group are allowed a worthless stock loss under section 165(g) with respect to all of the shares of the subsidiary stock that they own immediately after the deconsolidation;

(C) The members of the group are allowed a worthless stock loss under section 165(g) with respect to all of the shares of the subsidiary stock that they own immediately before the deconsolidation;

(D) The deconsolidation of the subsidiary results from the deconsolidation of a higher-tier subsidiary and, immediately after the deconsolidation of the subsidiary, none of the stock of the subsidiary is owned by a group member; or

(E) The deconsolidation of the subsidiary results from a termination of the group.

(4) *Special rule for lower-tier subsidiaries.* If, immediately after a transfer of subsidiary stock or a deconsolidation of a subsidiary, a lower-tier subsidiary some of the stock of which is owned by the subsidiary is a member of the group, then, for purposes of applying this paragraph (b), the subsidiary shall be treated as having transferred its stock of the lower-tier subsidiary. This principle shall apply to stock of subsidiaries that are owned by such lower-tier subsidiary.

(5) *Stock basis adjustments for higher-tier stock.* The basis adjustments required under this paragraph (b) result in basis adjustments to higher-tier member stock. The adjustments are applied in the order of the tiers, from the lowest to highest. For example, if a common parent owns stock of a subsidiary that owns stock of a lower-tier subsidiary and the subsidiary recognizes a loss on the disposition of a portion of its shares of the lower-tier subsidiary stock, the common parent must adjust its basis in its subsidiary stock under the principles of § 1.1502–32 to reflect the adjustments that the subsidiary must make to its basis in its stock of the lower-tier subsidiary.

(6) *Ordering rules.* (i) The rules of this paragraph (b) apply after the rules of § 1.1502–32 are applied.

(ii) The rules of this paragraph (b) apply before the rules of § 1.337(d)–2 and paragraphs (c) and (f) of this section are applied.

(iii) This paragraph (b) (and any resulting basis adjustments to higher-tier member stock made pursuant to paragraph (b)(5) of this section) applies to redetermine the basis of stock of a lower-tier subsidiary before this paragraph (b) applies to a higher-tier member of such lower-tier subsidiary.

(c) *Loss suspension*—(1) *General rule.* Any loss recognized by a member of a consolidated group with respect to the disposition of a share of subsidiary stock shall be suspended to the extent of the duplicated loss with respect to such share of stock if, immediately

after the disposition, the subsidiary is a member of the consolidated group of which it was a member immediately prior to the disposition (or any successor group).

(2) *Special rule for lower-tier subsidiaries.* This paragraph (c)(2) applies if neither paragraph (c)(1) nor (f) of this section applies to a member's disposition of a share of stock of a subsidiary (the departing member), a loss is recognized on the disposition of such share, and the departing member owns stock of one or more other subsidiaries (a remaining member) that is a member of such group immediately after the disposition. In that case, such loss shall be suspended to the extent the duplicated loss with respect to the departing member stock disposed of is attributable to the remaining member or members.

(3) *Treatment of suspended loss.* For purposes of the rules of §1.1502–32, any loss suspended pursuant to paragraph (c)(1) or (c)(2) of this section is treated as a noncapital, nondeductible expense of the member that disposes of subsidiary stock, incurred during the taxable year that includes the date of the disposition of stock to which paragraph (c)(1) or (c)(2) of this section applies. See §1.1502–32(b)(3)(iii)(C). Consequently, the basis of a higher-tier member's stock of the member that disposes of subsidiary stock is reduced by the suspended loss in the year it is suspended.

(4) *Reduction of suspended loss*—(i) *General rule.* The amount of any loss suspended pursuant to paragraphs (c)(1) and (c)(2) of this section shall be reduced, but not below zero, by the subsidiary's (and any successor's) items of deduction and loss, and the subsidiary's (and any successor's) allocable share of items of deduction and loss of all lower-tier subsidiaries, that are allocable to the period beginning on the date of the disposition that gave rise to the suspended loss and ending on the day before the first date on which the subsidiary (or any successor) is not a member of the group of which it was a member immediately prior to the disposition (or any successor group), and that are taken into account in determining consolidated taxable income (or loss) of such group for any taxable year that includes any date on or after the date of the disposition and before the first date on which the subsidiary (or any successor) is not a member of such group; provided, however, that such reduction shall not exceed the excess of the amount of such items over the amount of such items that are taken into account in determining the basis adjustments made under §1.1502–32 to stock of the subsidiary (or any successor) owned by members of the group. The preceding sentence shall not apply to items of deduction and loss to the extent that the group can establish that all or a portion of such items was not reflected in the computation of the duplicated loss with respect to the subsidiary on the date of the disposition of stock that gave rise to the suspended loss.

(ii) *Operating rules*—(A) *Year in which deduction or loss is taken into account.* For purposes of paragraph (c)(4)(i) of this section, a subsidiary's (or any successor's) deductions and losses are treated as taken into account when and to the extent they are absorbed by the subsidiary (or any successor) or any other member. To the extent that the subsidiary's (or any successor's) deduction or loss is absorbed in the year it arises or is carried forward and absorbed in a subsequent year (e.g., under section 172, 465, or 1212), the deduction is treated as taken into account in the year in which it is absorbed. To the extent that a subsidiary's (or any successor's) deduction or loss is carried back and absorbed in a prior year (whether consolidated or separate), the deduction or loss is treated as taken into account in the year in which it arises and not in the year in which it is absorbed.

(B) *Determination of items that are allocable to the post-disposition, pre-deconsolidation period.* For purposes of paragraph (c)(4)(i) of this section, the determination of whether a subsidiary's (or any successor's) items of deduction and loss and allocable share of items of deduction and loss of all lower-tier subsidiaries are allocable to the period beginning on the date of the disposition of subsidiary stock that gave rise to the suspended loss and ending on the day before the first date on which the subsidiary (or any successor) is not a member of the consolidated

group of which it was a member immediately prior to the disposition (or any successor group) is determined pursuant to the rules of §1.1502–76(b)(2), without regard to §1.1502–76(b)(2)(ii)(D), as if the subsidiary ceased to be a member of the group at the end of the day before the disposition and filed separate returns for the period beginning on the date of the disposition and ending on the day before the first date on which it is not a member of such group.

(5) *Allowable loss*—(i) *General rule.* To the extent not reduced under paragraph (c)(4) of this section, any loss suspended pursuant to paragraph (c)(1) or (c)(2) of this section shall be allowed, to the extent otherwise allowable under applicable provisions of the Internal Revenue Code and regulations thereunder, on a return filed by the group of which the subsidiary was a member on the date of the disposition of subsidiary stock that gave rise to the suspended loss (or any successor group) for the taxable year that includes the day before the first date on which the subsidiary (and any successor) is not a member of such group or the date the group is allowed a worthless stock loss under section 165(g) (taking into account the provisions of §1.1502–80(c)) with respect to all of the subsidiary stock owned by members.

(ii) *No tiering up of certain adjustments.* No adjustments shall be made to a member's basis of stock of a subsidiary (or any successor) for a suspended loss that is taken into account under paragraph (c)(5)(i) of this section. See §1.1502–32(a)(2).

(iii) *Statement of allowed loss.* Paragraph (c)(5)(i) of this section applies only if the separate statement required under this paragraph (c)(5)(iii) is filed with, or as part of, the taxpayer's return for the year in which the loss is allowable. The statement must be entitled ''ALLOWED LOSS UNDER §1.1502–35(c)(5)'' and must contain the name and employer identification number of the subsidiary the stock of which gave rise to the loss.

(6) *Special rule for dispositions of certain carryover basis assets.* If—

(i) A member of a group recognizes a loss on the disposition of an asset other than stock of a subsidiary;

(ii) Such member's basis in the asset disposed of was determined, directly or indirectly, in whole or in part, by reference to the basis of stock of a subsidiary and, at the time of the determination of the member's basis in the asset disposed of, there was a duplicated loss with respect to such stock of the subsidiary; and

(iii) Immediately after the disposition, the subsidiary is a member of such group, then such loss shall be suspended pursuant to the principles of paragraphs (c)(1) and (c)(2) of this section to the extent of the duplicated loss with respect to such stock at the time of the determination of basis of the asset disposed of. Principles similar to those set forth in paragraphs (c)(3), (c)(4), and (c)(5) of this section shall apply to a loss suspended pursuant to this paragraph (c)(6).

(7) *Coordination with loss deferral, loss disallowance, and other rules*—(i) *In general.* Loss recognized on the disposition of subsidiary stock or another asset is subject to redetermination, deferral, or disallowance under other applicable provisions of the Internal Revenue Code and regulations thereunder, including sections 267(f) and 482. Paragraphs (c)(1), (c)(2), and (c)(6) of this section do not apply to a loss that is disallowed under any other provision. If loss is deferred under any other provision, paragraphs (c)(1), (c)(2), and (c)(6) of this section apply when the loss would otherwise be taken into account under such other provision. However, if an overriding event described in paragraph (c)(7)(ii) of this section occurs before the deferred loss is taken into account, paragraphs (c)(1), (c)(2), and (c)(6) of this section apply to the loss immediately before the event occurs, even though the loss may not be taken into account until a later time.

(ii) *Overriding events.* For purposes of paragraph (c)(7)(i) of this section, the following are overriding events—

(A) The stock ceases to be owned by a member of the consolidated group;

(B) The stock is canceled or redeemed (regardless of whether it is retired or held as treasury stock); or

(C) The stock is treated as disposed of under § 1.1502–19(c)(1)(ii)(B) or (c)(1)(iii).

(8) *Application.* This paragraph (c) shall not be applied in a manner that permanently disallows a deduction for an economic loss, provided that such deduction is otherwise allowable. If the application of any provision of this paragraph (c) results in such a disallowance, proper adjustment may be made to prevent such a disallowance. Whether a provision of this paragraph (c) has resulted in such a disallowance is determined on the date on which the subsidiary (or any successor) the disposition of the stock of which gave rise to a suspended stock loss is not a member of the group or the date the group is allowed a worthless stock loss under section 165(g) (taking into account the provisions of § 1.1502–80(c)) with respect to all of such subsidiary stock owned by members. Proper adjustment in such cases shall be made by restoring the suspended stock loss immediately before the subsidiary ceases to be a member of the group or the group is allowed a worthless stock loss under section 165(g) (taking into account the provisions of § 1.1502–80(c)) with respect to all of such subsidiary stock owned by members, to the extent that its reduction pursuant to paragraph (c)(4) of this section had the result of permanently disallowing a deduction for an economic loss.

(9) *Ordering rule.* The rules of this paragraph (c) apply after the rules of paragraph (b) of this section and § 1.337(d)–2 are applied.

(d) *Definitions*—(1) *Disposition* means any event in which gain or loss is recognized, in whole or in part.

(2) *Deconsolidation* means any event that causes a subsidiary to no longer be a member of the consolidated group.

(3) *Value* means fair market value.

(4) *Duplicated loss*—(i) *In general.* Duplicated loss is determined immediately after a disposition and equals the excess, if any, of—

(A) The sum of—

(*1*) The aggregate adjusted basis of the subsidiary's assets other than any stock that subsidiary owns in another subsidiary;

(*2*) Any losses attributable to the subsidiary and carried to the subsidiary's first taxable year following the disposition; and

(*3*) Any deductions of the subsidiary that have been recognized but are deferred under a provision of the Internal Revenue Code (such as deductions deferred under section 469); over

(B) The sum of—

(*1*) The value of the subsidiary's stock; and

(*2*) Any liabilities of the subsidiary that have been taken account for tax purposes.

(ii) *Special rules.* (A) The amounts determined under paragraph (d)(4)(i) (other than amounts described in paragraph (d)(4)(i)(B)(1)) of this section with respect to a subsidiary include its allocable share of corresponding amounts with respect to all lower-tier subsidiaries. If 80 percent or more in value of the stock of a subsidiary is acquired by purchase in a single transaction (or in a series of related transactions during any 12-month period), the value of the subsidiary's stock may not exceed the purchase price of the stock divided by the percentage of the stock (by value) so purchased. For this purpose, stock is acquired by purchase if the transferee is not related to the transferor within the meaning of sections 267(b) and 707(b)(1), using the language ''10 percent'' instead of ''50 percent'' each place that it appears, and the transferee's basis in the stock is determined wholly by reference to the consideration paid for such stock.

(B) The amounts determined under paragraph (d)(4)(i) of this section are not applied more than once to suspend a loss under this section.

(5) *Predecessor and successor.* A predecessor is a transferor of assets to a transferee (the successor) in a transaction—

(i) To which section 381(a) applies;

(ii) In which substantially all of the assets of the transferor are transferred to members in a complete liquidation;

(iii) In which the successor's basis in assets is determined (directly or indirectly, in whole or in part) by reference to the transferor's basis in such assets, but the transferee is a successor only with respect to the assets the basis of which is so determined; or

(iv) Which is an intercompany transaction, but only with respect to assets

that are being accounted for by the transferor in a prior intercompany transaction.

(6) *Successor group.* A surviving group is treated as a successor group of a consolidated group (the terminating group) that ceases to exist as a result of—

(i) The acquisition by a member of another consolidated group of either the assets of the common parent of the terminating group in a reorganization described in section 381(a)(2), or the stock of the common parent of the terminating group; or

(ii) The application of the principles of § 1.1502–75(d)(2) or (3).

(7) *Preferred stock, common stock.* Preferred stock and common stock shall have the meanings set forth in § 1.1502–32(d)(2) and (3), respectively.

(8) *Higher-tier.* A subsidiary is *higher-tier* with respect to a member if or to the extent investment basis adjustments under § 1.1502–32 with respect to the stock of the latter member would affect investment basis adjustments with respect to the stock of the former member.

(9) *Lower-tier.* A subsidiary is *lower-tier* with respect to a member if or to the extent investment basis adjustments under § 1.1502–32 with respect to the stock of the former member would affect investment basis adjustments with respect to the stock of the latter member.

(e) *Examples.* For purposes of the examples in this section, unless otherwise stated, all groups file consolidated returns on a calendar-year basis, the facts set forth the only corporate activity, all transactions are between unrelated persons, and tax liabilities are disregarded. In addition, all transactions described in section 362(a) are completed before October 22, 2004, and therefore are not subject to section 362(e)(2). The principles of paragraphs (a) through (d) of this section are illustrated by the following examples:

Example 1. Nondeconsolidating sale of preferred stock of lower-tier subsidiary—(i) *Facts.* P owns 100 percent of the common stock of each of S1 and S2. S1 and S2 each have only one class of stock outstanding. P's basis in the stock of S1 is $100 and the value of such stock is $130. P's basis in the stock of S2 is $120 and the value of such stock is $90. P, S1, and S2 are all members of the P group. S1 and S2 form S3. In Year 1, in transfers to which section 351 applies, S1 contributes $100 to S3 in exchange for all of the common stock of S3 and S2 contributes an asset with a basis of $50 and a value of $20 to S3 in exchange for all of the preferred stock of S3. S3 becomes a member of the P group. In Year 3, in a transaction that is not part of the plan that includes the contributions to S3, S2 sells the preferred stock of S3 for $20. Immediately after the sale, S3 is a member of the P group.

(ii) *Application of basis redetermination rule.* Because S2's basis in the preferred stock of S3 exceeds its value immediately prior to the sale and S3 is a member of the P group immediately after the sale, all of the P group members' bases in the stock of S3 is redetermined pursuant to paragraph (b)(1) of this section. Of the group members' total basis of $150 in the S3 stock, $20 is allocated to the preferred stock, the fair market value of the preferred stock on the date of the sale, and $130 is allocated to the common stock. S2's sale of the preferred stock results in the recognition of $0 of gain/loss. Pursuant to paragraph (b)(5) of this section, the redetermination of S1's and S2's bases in the stock of S3 results in adjustments to P's basis in the stock of S1 and S2. In particular, P's basis in the stock of S1 is increased by $30 to $130 and its basis in the stock of S2 is decreased by $30 to $90.

Example 2. Deconsolidating sale of common stock—(i) *Facts.* In Year 1, in a transfer to which section 351 applies, P contributes Asset A with a basis of $900 and a value of $200 to S in exchange for one share of S common stock (CS1). In Years 2 and 3, in successive but unrelated transfers to which section 351 applies, P transfers $200 to S in exchange for one share of S common stock (CS2), Asset B with a basis of $300 and a value of $200 in exchange for one share of S common stock (CS3), and Asset C with a basis of $1000 and a value of $200 in exchange for one share of S common stock (CS4). In Year 4, S sells Asset A for $200, recognizing $700 of loss that is used to offset income of P recognized during Year 4. As a result of the sale of Asset A, the basis of each of P's four shares of S common stock is reduced by $175. Therefore, the basis of CS1 is $725. The basis of CS2 is $25. The basis of CS3 is $125, and the basis of CS4 is $825. In Year 5 in a transaction that is not part of a plan that includes the Year 1 contribution, P sells CS4 for $200. Immediately after the sale of CS4, S is not a member of the P group.

(ii) *Application of basis redetermination rule.* Because P's basis in each of CS1 and CS4 exceeds its value immediately prior to the deconsolidation of S, P's basis in its shares of S common stock is redetermined pursuant to paragraph (b)(2) of this section. Pursuant to paragraph (b)(2)(ii) of this section, the reallocable basis amount is $350 (the lesser of

$1150, the gross loss inherent in the stock of S owned by P immediately before the sale, and $350, the aggregate amount of S's items of deduction and loss that were previously taken into account in the computation of the adjustment to the basis of the stock of S that P did not hold at a loss immediately before the deconsolidation). Pursuant to paragraph (b)(2)(i) of this section, first, P's basis in CS1 is reduced from $725 to $600 and P's basis in CS4 is reduced from $825 to $600. Then, the reallocable basis amount increases P's basis in CS2 from $25 to $250 and P's basis in CS3 from $125 to $250. P recognizes $400 of loss on the sale of CS4. The loss suspension rule does not apply because S is no longer a member of the P group. Thus, the loss is allowable at that time.

Example 3. Nondeconsolidating sale of common stock—(i) *Facts.* In Year 1, P forms S with a contribution of $80 in exchange for 80 shares of the common stock of S, which at that time represents all of the outstanding stock of S. S becomes a member of the P group. In Year 2, P contributes Asset A with a basis of $50 and a value of $20 in exchange for 20 shares of the common stock of S in a transfer to which section 351 applies. In Year 4, in a transaction that is not part of the plan that includes the Year 2 contribution, P sells the 20 shares of the common stock of S that it acquired in Year 2 for $20. Immediately after the Year 4 stock sale, S is a member of the P group. At the time of the Year 4 stock sale, S has $80 and Asset A. In Year 5, S sells Asset A, the basis and value of which have not changed since its contribution to S. On the sale of Asset A for $20, S recognizes a $30 loss. The P group cannot establish that all or a portion of the $30 loss was not reflected in the calculation of the duplicated loss of S on the date of the Year 4 stock sale. The $30 loss is used on the P group return to offset income of P. In Year 6, P sells its remaining S common stock for $80.

(ii) *Application of basis redetermination and loss suspension rules.* Because P's basis in the common stock sold exceeds its value immediately prior to the sale and S is a member of the P group immediately after the sale, P's basis in all of the stock of S is redetermined pursuant to paragraph (b)(1) of this section. Of P's total basis of $130 in the S common stock, a proportionate amount is allocated to each of the 100 shares of S common stock. Accordingly, $26 is allocated to the common stock of S that is sold and $104 is allocated to the common stock of S that is retained. On P's sale of the 20 shares of the common stock of S for $20, P recognizes a loss of $6. Because the sale of the 20 shares of common stock of S does not result in the deconsolidation of S, under paragraph (c)(1) of this section, that loss is suspended to the extent of the duplicated loss with respect to the shares sold. The duplicated loss with respect to the shares sold is $6. Therefore, the entire $6 loss is suspended.

(iii) *Effect of subsequent asset sale on stock basis.* Of the $30 loss recognized on the sale of Asset A, $24 is taken into account in determining the basis adjustments made under § 1.1502–32 to the stock of S owned by P. Accordingly, P's basis in its S stock is reduced by $24 from $104 to $80.

(iv) *Effect of subsequent asset sale on suspended loss.* Because P cannot establish that all or a portion of the loss recognized on the sale of Asset A was not reflected in the calculation of the duplicated loss of S on the date of the Year 4 stock sale and such loss is allocable to the period beginning on the date of the Year 4 disposition of the S stock and ending on the day before the first date on which S is not a member of the P group and is taken into account in determining consolidated taxable income (or loss) of the P group for a taxable year that includes a date on or after the date of the Year 4 disposition and before the first date on which S is not a member of the P group, such asset loss reduces the suspended loss pursuant to paragraph (c)(4) of this section. The amount of such reduction, however, cannot exceed $6, the excess of the amount of such loss, $30, over the amount of such loss that is taken into account in determining the basis adjustment made to the stock of S owned by P, $24. Therefore, the suspended loss is reduced to zero.

(v) *Effect of subsequent stock sale.* P recognizes $0 gain/loss on the Year 5 sale of its remaining S common stock. No amount of suspended loss remains to be allowed under paragraph (c)(5) of this section.

Example 4. Nondeconsolidating sale of common stock of lower-tier subsidiary—(i) *Facts.* In Year 1, P forms S1 with a contribution of $200 in exchange for all of the common stock of S1, which represents all of the outstanding stock of S1. In the same year, S1 forms S2 with a contribution of $80 in exchange for 80 shares of the common stock of S2, which at that time represents all of the outstanding stock of S2. S1 and S2 become members of the P group. In the same year, S2 purchases Asset A for $80. In Year 2, S1 contributes Asset B with a basis of $50 and a value of $20 in exchange for 20 shares of the common stock of S2 in a transfer to which section 351 applies. In Year 4, S1 sells the 20 shares of the common stock of S2 that it acquired in Year 2 for $20. Immediately after the Year 4 stock sale, S2 is a member of the P group. At the time of the Year 4 stock sale, the bases and values of Asset A and Asset B are unchanged. In Year 5, S2 sells Asset B for $45, recognizing a $5 loss. The P group cannot establish that all or a portion of the $5 loss was not reflected in the calculation of the duplicated loss of S2 on the date of the Year 4 stock sale. The $5 loss is used on the P group

return to offset income of P. In Year 6, S1 sells its remaining S2 common stock for $100.

(ii) *Application of basis redetermination and loss suspension rules.* Because S1's basis in the S2 common stock sold exceeds its value immediately prior to the sale and S2 is a member of the P group immediately after the sale, S1's basis in all of the stock of S2 is redetermined pursuant to paragraph (b)(1) of this section. Of S1's total basis of $130 in the S2 common stock, a proportionate amount is allocated to each of the 100 shares of S2 common stock. Accordingly, a total of $26 is allocated to the common stock of S2 that is sold and $104 is allocated to the common stock of S2 that is retained. On S1's sale of the 20 shares of the common stock of S2 for $20, S1 recognizes a loss of $6. Because the sale of the 20 shares of common stock of S2 does not result in the deconsolidation of S2, under paragraph (c)(1) of this section, that loss is suspended to the extent of the duplicated loss with respect to the shares sold. The duplicated loss with respect to the shares sold is $6. Therefore, the entire $6 loss is suspended. Pursuant to paragraph (c)(3) of this section and §1.1502–32(b)(3)(iii)(C), the suspended loss is treated as a noncapital, nondeductible expense incurred by S1 during the tax year that includes the date of the disposition of stock to which paragraph (c)(1) of this section applies. Accordingly, P's basis in its S1 stock is reduced from $200 to $194.

(iii) *Effect of subsequent asset sale on stock basis.* Of the $5 loss recognized on the sale of Asset B, $4 is taken into account in determining the basis adjustments made under §1.1502–32 to the stock of S2 owned by S1. Accordingly, S1's basis in its S2 stock is reduced by $4 from $104 to $100 and P's basis in its S1 stock is reduced by $4 from $194 to $190.

(iv) *Effect of subsequent asset sale on suspended loss.* Because P cannot establish that all or a portion of the loss recognized on the sale of Asset B was not reflected in the calculation of the duplicated loss of S2 on the date of the Year 4 stock sale and such loss is allocable to the period beginning on the date of the Year 4 disposition of the S2 stock and ending on the day before the first date on which S2 is not a member of the P group and is taken into account in determining consolidated taxable income (or loss) of the P group for a taxable year that includes a date on or after the date of the Year 3 disposition and before the first date on which S2 is not a member of the P group, such asset loss reduces the suspended loss pursuant to paragraph (c)(4) of this section. The amount of such reduction, however, cannot exceed $1, the excess of the amount of such loss, $5, over the amount of such loss that is taken into account in determining the basis adjustment made to the stock of S2 owned by members of the P group, $4. Therefore, the suspended loss is reduced to $5.

(v) *Effect of subsequent stock sale.* In Year 6, when S1 sells its remaining S2 stock for $100, it recognizes $0 gain/loss. Pursuant to paragraph (c)(5) of this section, the remaining $5 of the suspended loss is allowed on the P group's return for Year 5 when S1 sells its remaining S2 stock.

Example 5. Deconsolidating sale of subsidiary owning stock of another subsidiary that remains in group—(i) *Facts.* In Year 1, P forms S1 with a contribution of Asset A with a basis of $50 and a value of $20 in exchange for 100 shares of common stock of S1 in a transfer to which section 351 applies. Also in Year 1, P and S1 form S2. P contributes $80 to S2 in exchange for 80 shares of common stock of S2. S1 contributes Asset A to S2 in exchange for 20 shares of common stock of S2 in a transfer to which section 351 applies. In Year 3, in a transaction that is not part of a plan that includes the Year 1 contributions, P sells its 100 shares of S1 common stock for $20. Immediately after the Year 3 stock sale, S2 is a member of the P group. At the time of the Year 3 stock sale, S1 owns 20 shares of common stock of S2, and S2 has $80 and Asset A. In Year 4, S2 sells Asset A, the basis and value of which have not changed since its contribution to S2. On the sale of Asset A for $20, S2 recognizes a $30 loss. That $30 loss is used on the P group return to offset income of P. In Year 5, P sells its S2 common stock for $80.

(ii) *Application of basis redetermination and loss suspension rules.* Pursuant to paragraph (b)(4) of this section, because immediately before P's transfer of S1 stock S1 owns stock of S2 (another subsidiary of the same group) that has a basis that exceeds its value, paragraph (b) of this section applies as if S1 had transferred its stock of S2. Because S2 is a member of the group immediately after the transfer of the S1 stock, the group member's basis in the S2 stock is redetermined pursuant to paragraph (b)(1) of this section immediately prior to the sale of the S1 stock. Of the group members' total basis of $130 in the S2 stock, $26 is allocated to S1's 20 shares of S2 common stock and $104 is allocated to P's 80 shares of S2 common stock. Pursuant to paragraph (b)(5) of this section, the redetermination of S1's basis in the stock of S2 results in an adjustment to P's basis in the stock of S1. In particular, P's basis in the stock of S1 is decreased by $24 to $26. On P's sale of its 100 shares of S1 common stock for $20, P recognizes a loss of $6. Because S1 is not a member of the P group immediately after P's sale of the S1 stock, paragraph (c)(1) of this section does not apply to suspend such loss. However, because P recognizes a loss with respect to the disposition of the S1 stock and S1 owns stock of S2 (which is a member of the P group immediately after the disposition), paragraph (c)(2) of this section does apply to suspend up to $6 of that loss, an amount equal to the amount by

which the duplicated loss with respect to the stock of S1 sold is attributable to S2's adjusted basis in its assets, loss carryforwards, and deferred deductions.

(iii) *Effect of subsequent asset sale on stock basis.* Of the $30 loss recognized on the sale of Asset A, $24 is taken into account in determining the basis adjustments made under § 1.1502–32 to the stock of S2 owned by P. Accordingly, P's basis in its S2 stock is reduced by $24 from $104 to $80.

(iv) *Effect of subsequent asset sale on suspended loss.* Because P cannot establish that all or a portion of the loss recognized on the sale of Asset A was not reflected in the calculation of the duplicated loss of S2 on the date of the Year 3 stock sale and such loss is allocable to the period beginning on the date of the Year 3 deemed disposition of the S2 stock and ending on the day before the first date on which S2 is not a member of the P group and is taken into account in determining consolidated taxable income (or loss) of the P group for a taxable year that includes a date on or after the date of the Year 3 deemed disposition and before the first date on which S2 is not a member of the P group, such asset loss reduces the suspended loss pursuant to paragraph (c)(4) of this section. The amount of such reduction, however, cannot exceed $6, the excess of the amount of such loss, $30, over the amount of such loss that is taken into account in determining the basis adjustment made to the stock of S2 owned by P, $24. Therefore, the suspended loss is reduced to zero.

(v) *Effect of subsequent stock sale.* P recognizes $0 gain/loss on the Year 5 sale of its remaining S2 common stock. No amount of suspended loss remains to be allowed under paragraph (c)(5) of this section.

Example 6. Loss recognized on asset with basis determined by reference to stock basis of subsidiary—(i) *Facts.* In Year 1, P forms S with a contribution of $80 in exchange for 80 shares of common stock of S which at that time represents all of the outstanding stock of S. S becomes a member of the P group. In Year 2, P contributes Asset A with a basis of $50 and a value of $20 in exchange for 20 shares of common stock of S in a transfer to which section 351 applies. In Year 4, in a transaction that is not part of a plan that includes the Year 1 and Year 2 contributions, P contributes the 20 shares of S common stock it acquired in Year 2 to PS, a partnership, in exchange for a 20 percent capital and profits interest in a transaction described in section 721. Immediately after the contribution to PS, S is a member of the P group. In Year 5, P sells its interest in PS for $20, recognizing a $30 loss.

(ii) *Application of basis redetermination rule upon nonrecognition transfer.* Because P's basis in the S common stock contributed to PS exceeds its value immediately prior to the transfer and S is a member of the P group immediately after the transfer, P's basis in all of the S stock is redetermined pursuant to paragraph (b)(1) of this section. Of P's total basis of $130 in the common stock of S, a proportionate amount is allocated to each share of S common stock. Accordingly, $26 is allocated to the S common stock that is contributed to PS and, under section 722, P's basis in its interest in PS is $26.

(iii) *Application of loss suspension rule on disposition of asset with basis determined by reference to stock basis of subsidiary.* P recognizes a $6 loss on its disposition of its interest in PS. Because P's basis in its interest in PS was determined by reference to the basis of S stock and at the time of the determination of P's basis in its interest in PS such S stock had a duplicated loss of $6, and, immediately after the disposition, S is a member of the P group, such loss is suspended to the extent of such duplicated loss. Principles similar to those of paragraphs (c)(3), (c)(4), and (c)(5) of this section shall apply to such suspended loss.

(f) *Worthlessness not followed by separate return years.* Notwithstanding any other provision in the regulations under section 1502, if a member of a group (the claiming group) treats stock of a subsidiary as worthless under section 165 (taking into account the provisions of § 1.1502–80(c)) and, on the day following the last day of the claiming group's taxable year in which the worthless stock deduction is claimed, the subsidiary (or its successor, determined without regard to paragraphs (d)(5)(iii) and (iv) of this section) is a member of a group that includes any corporation that, during that taxable year, was a member of the claiming group (other than a lower-tier subsidiary of the subsidiary) or is a successor (determined without regard to paragraphs (d)(5)(iii) and (iv) of this section) of such a member, then all losses treated as attributable to the subsidiary under the principles of § 1.1502–21(b)(2)(iv) shall be treated as expired as of the beginning of the day following the last day of the claiming group's taxable year in which the worthless stock deduction is claimed. In addition, notwithstanding any other provision in the regulations under section 1502, if a member recognizes a loss with respect to subsidiary stock and on the following day the subsidiary is not a member of the group and does not have a separate return year, then all losses treated as attributable to the

subsidiary under the principles of § 1.1502–21(b)(2)(iv) shall be treated as expired as of the beginning of the day following the last day of the group's taxable year in which the stock loss is claimed. For purposes of this paragraph (f), the determination of the losses attributable to the subsidiary shall be made after computing the taxable income of the group for the taxable year in which the group treats the stock of the subsidiary as worthless or the subsidiary liquidates and after computing the taxable income for any taxable year to which such losses may be carried back. The loss treated as expired under this paragraph (f) shall not be treated as a noncapital, nondeductible expense under § 1.1502–32(b)(2)(iii). This paragraph (f) applies to worthlessness determinations and liquidations that occur on or after March 10, 2006. For rules applicable to worthless determinations and liquidations before March 10, 2006, see § 1.1502–35T(f)(1) and (2) as contained in 26 CFR part 1 in effect on January 1, 2006.

(g) *Anti-avoidance rules*—(1) *Transfer of share without a loss in avoidance.* If a share of subsidiary stock has a basis that does not exceed its value and the share is transferred with a view to avoiding application of the rules of paragraph (b) of this section prior to the transfer of a share of subsidiary stock that has a basis that does exceed its value or a deconsolidation of a subsidiary, the rules of paragraph (b) of this section shall apply immediately prior to the transfer of stock that has a basis that does not exceed its value.

(2) *Transfers of loss property in avoidance.* If a member of a consolidated group contributes an asset with a basis that exceeds its value to a partnership in a transaction described in section 721 or a corporation that is not a member of such group in a transfer described in section 351, such partnership or corporation contributes such asset to a subsidiary in a transfer described in section 351, and such contributions are undertaken with a view to avoiding the rules of paragraph (b) or (c) of this section, adjustments must be made to carry out the purposes of this section.

(3) *Anti-loss reimportation*—(i) *Application.* This paragraph (g)(3) applies if—

(A) A member of a group recognizes and is allowed a loss on the disposition of a share of stock of a subsidiary with respect to which there is a duplicated loss; and

(B) Within the 10-year period beginning on the date the subsidiary (or any successor) ceases to be a member of such group—

(*1*) The subsidiary (or any successor) again becomes a member of such group (or any successor group) when the subsidiary (or any successor) owns any asset that has a basis in excess of value at such time and that was owned by the subsidiary (or any successor) on the date of a disposition of stock of such subsidiary (or any successor) and that had a basis in excess of value on such date;

(*2*) The subsidiary (or any successor) again becomes a member of such group (or any successor group) when the subsidiary (or any successor) owns any asset that has a basis in excess of value at such time and that has a basis that reflects, directly or indirectly, in whole or in part, the basis of any asset that was owned by the subsidiary on the date of a disposition of stock of such subsidiary (or any successor) and that had a basis in excess of value on such date;

(*3*) In a transaction described in section 381 or section 351, any member of such group (or any successor group) acquires any asset of the subsidiary (or any successor) that was owned by the subsidiary (or any successor) on the date of a disposition of stock of such subsidiary (or any successor) and that had a basis in excess of its value on such date, or any asset that has a basis that reflects, directly or indirectly, in whole or in part, the basis of any asset that was owned by the subsidiary (or any successor) on the date of a disposition of stock of such subsidiary (or any successor) and that had a basis in excess of its value on such date, and, immediately after the acquisition of such asset, such asset has a basis in excess of its value;

(*4*) The subsidiary (or any successor) again becomes a member of such group (or any successor group) when the subsidiary (or any successor) has a liability (within the meaning of section 358(h)(3)) that it had on the date of a

disposition of stock of such subsidiary (or any successor) and such liability will give rise to a deduction;

(*5*) In a transaction described in section 381 or section 351, any member of such group (or any successor group) assumes a liability (within the meaning of section 358(h)(3)) that was a liability of the subsidiary (or any successor) on the date of a disposition of stock of such subsidiary (or any successor);

(*6*) The subsidiary (or any successor) again becomes a member of such group (or any successor group) when the subsidiary (or any successor) has any losses or deferred deductions that were losses or deferred deductions of the subsidiary (or any successor) on the date of a disposition of stock of such subsidiary (or any successor);

(*7*) The subsidiary (or any successor) again becomes a member of such group (or any successor group) when the subsidiary (or any successor) has any losses or deferred deductions that are attributable to any asset that was owned by the subsidiary (or any successor) on the date of a disposition of stock of such subsidiary (or any successor) and that had a basis in excess of value on such date;

(*8*) The subsidiary (or any successor) again becomes a member of such group (or any successor group) when the subsidiary (or any successor) has any losses or deferred deductions that are attributable to any asset that had a basis that reflected, directly or indirectly, in whole or in part, the basis of any asset that was owned by the subsidiary (or any successor) on the date of a disposition of stock of such subsidiary (or any successor) and that had a basis in excess of value on such date;

(*9*) The subsidiary (or any successor) again becomes a member of such group (or any successor group) when the subsidiary (or any successor) has any losses or deferred deductions that are attributable to a liability (within the meaning of section 358(h)(3)) that it had on the date of a disposition of stock of such subsidiary (or any successor);

(*10*) Any member of such group (or any successor group) succeeds to any losses or deferred deductions of the subsidiary (or any successor) that were losses or deferred deductions of the subsidiary (or any successor) on the date of a disposition of stock of such subsidiary (or any successor), that are attributable to any asset that was owned by the subsidiary (or any successor) on the date of a disposition of stock of such subsidiary (or any successor) and that had a basis in excess of value on such date, that are attributable to any asset that had a basis that reflected, directly or indirectly, in whole or in part, the basis of any asset that was owned by the subsidiary (or any successor) on the date of a disposition of stock of such subsidiary (or any successor) and that had a basis in excess of value on such date, or that are attributable to a liability (within the meaning of section 358(h)(3)) of the subsidiary (or any successor) on the date of a disposition of stock of such subsidiary (or any successor); or

(*11*) Any losses or deferred deductions of the subsidiary (or any successor) that were losses or deferred deductions of the subsidiary (or any successor) on the date of a disposition of stock of such subsidiary (or any successor), that are attributable to any asset that was owned by the subsidiary (or any successor) on the date of a disposition of stock of such subsidiary (or any successor) and that had a basis in excess of value on such date, that are attributable to any asset that had a basis that reflected, directly or indirectly, in whole or in part, the basis of any asset that was owned by the subsidiary (or any successor) on the date of a disposition of stock of such subsidiary (or any successor) and that had a basis in excess of value on such date, or that are attributable to a liability (within the meaning of section 358(h)(3)) of the subsidiary (or any successor) on the date of a disposition of stock of such subsidiary (or any successor) are carried back to a pre-disposition taxable year of the subsidiary.

(ii) *Operating rules.* (A) For purposes of paragraph (g)(3)(i)(B) of this section, assets shall include stock and securities and the subsidiary (or any successor) shall be treated as having its allocable share of losses and deferred deductions of all lower-tier subsidiaries and as owning its allocable share of each asset of all lower-tier subsidiaries.

(B) For purposes of paragraphs (g)(3)(i)(B)(*6*), (*7*), (*8*), and (*9*) of this section, unless the group can establish otherwise, if the subsidiary (or any successor) again becomes a member of such group (or any successor group) at a time when the subsidiary (or any successor) has any losses or deferred deductions, such losses and deferred deductions shall be treated as losses or deferred deductions that were losses or deferred deductions of the subsidiary (or any successor) on the date of a disposition of stock of such subsidiary (or any successor), losses or deferred deductions that are attributable to assets that were owned by the subsidiary (or any successor) on the date of a disposition of stock of such subsidiary (or any successor) and that had bases in excess of value on such date, losses or deferred deductions that are attributable to assets that had bases that reflected, directly or indirectly, in whole or in part, the bases of assets that were owned by the subsidiary (or any successor) on the date of a disposition of stock of such subsidiary (or any successor) and that had bases in excess of value on such date, or losses or deferred deductions attributable to a liability (within the meaning of section 358(h)(3)) of the subsidiary (or any successor) on the date of a disposition of stock of such subsidiary (or any successor).

(C) For purposes of paragraph (g)(3)(i)(B)(*10*) of this section, unless the group can establish otherwise, if a member of such group (or any successor group) succeeds to any losses or deferred deductions of the subsidiary (or any successor), such losses and deferred deductions shall be treated as losses or deferred deductions that were losses or deferred deductions of the subsidiary (or any successor) on the date of a disposition of stock of such subsidiary (or any successor), losses or deferred deductions that are attributable to assets that were owned by the subsidiary (or any successor) on the date of a disposition of stock of such subsidiary (or any successor) and that had bases in excess of value on such date, losses or deferred deductions that are attributable to assets that had bases that reflected, directly or indirectly, in whole or in part, the bases of assets that were owned by the subsidiary (or any successor) on the date of a disposition of stock of such subsidiary (or any successor) and that had bases in excess of value on such date, or losses or deferred deductions attributable to a liability (within the meaning of section 358(h)(3)) of the subsidiary (or any successor) on the date of a disposition of stock of such subsidiary (or any successor).

(D) For purposes of paragraph (g)(3)(i)(B)(*11*) of this section, unless the group can establish otherwise, if any losses or deferred deductions of the subsidiary (or any successor) are carried back to a pre-disposition taxable year of the subsidiary, such losses and deferred deductions shall be treated as losses or deferred deductions that were losses or deferred deductions of the subsidiary (or any successor) on the date of a disposition of stock of such subsidiary (or any successor), losses or deferred deductions that are attributable to assets that were owned by the subsidiary (or any successor) on the date of a disposition of stock of such subsidiary (or any successor) and that had a basis in excess of value on such date, losses or deferred deductions that are attributable to assets that had bases that reflected, directly or indirectly, in whole or in part, the bases of assets that were owned by the subsidiary (or any successor) on the date of a disposition of stock of such subsidiary (or any successor) and that had a basis in excess of value on such date, or losses or deferred deductions that are attributable to a liability (within the meaning of section 358(h)(3)) of the subsidiary (or any successor) on the date of a disposition of stock of such subsidiary (or any successor).

(iii) *Loss disallowance.* If this paragraph (g)(3) applies, then, to the extent that the aggregate amount of loss recognized by members of the group (and any successor group) on dispositions of the subsidiary stock was attributable to a duplicated loss of such subsidiary that was allowed, such group (or any successor group) will be denied the use of—

(A) Any loss recognized that is attributable to, directly or indirectly, an asset that was owned by the subsidiary

(or any successor) on the date of a disposition of stock of such subsidiary (or any successor) and that had a basis in excess of value on such date, to the extent of the lesser of the loss inherent in such asset on the date of a disposition of the stock of the subsidiary (or any successor) and the loss inherent in such asset on the date of the event described in paragraph (g)(3)(i)(B) of this section that gives rise to the application of this paragraph (g)(3);

(B) Any loss recognized that is attributable to, directly or indirectly, an asset that has a basis that reflects, directly or indirectly, in whole or in part, the basis of any asset that was owned by the subsidiary (or any successor) on the date of a disposition of stock of such subsidiary (or any successor) and that had a basis in excess of its value on such date, to the extent of the lesser of the loss inherent in the asset that was owned by the subsidiary (or any successor) on the date of a disposition of stock of such subsidiary (or any successor) the basis of which is reflected, directly or indirectly, in whole or in part, in the basis of such asset on the date of the disposition and the loss inherent in such asset on the date of the event described in paragraph (g)(3)(i)(B) of this section that gives rise to the application of this paragraph (g)(3);

(C) Any loss or deduction that is attributable to a liability described in paragraph (g)(3)(i)(B)(*4*) or (*5*) of this section; and

(D) Any loss or deduction described in paragraph (g)(3)(i)(B)(*6*), (*7*), (*8*), (*9*), (*10*), or (*11*) of this section, provided that a loss or deferred deduction described in paragraph (g)(3)(i)(B)(*11*) of this section shall be allowed to be carried forward to a post-disposition taxable year of the subsidiary.

(iv) *Treatment of disallowed loss.* For purposes of § 1.1502–32(b)(3)(iii), any loss or deduction the use of which is disallowed pursuant to paragraph (g)(3)(iii) of this section (other than a loss or deduction described in paragraph (g)(3)(i)(B)(*11*) of this section), and with respect to which no waiver described in § 1.1502–32(b)(4) is filed, is treated as a noncapital, nondeductible expense incurred during the taxable year that such loss would otherwise be absorbed.

(4) *Avoidance of recognition of gain.* (i) If a transaction is structured with a view to, and has the effect of, deferring or avoiding the recognition of gain on a disposition of stock by invoking the application of paragraph (b)(1) of this section to redetermine the basis of stock of a subsidiary, and the stock loss that gives rise to the application of paragraph (b)(1) of this section is not significant, paragraphs (b) and (c) of this section shall not apply.

(ii) If a transaction is structured with a view to, and has the effect of, deferring or avoiding the recognition of gain on a disposition of stock by invoking the application of paragraph (b)(2) of this section to redetermine the basis of stock of a subsidiary, and the duplicated loss of the subsidiary that is reflected in stock of the subsidiary owned by members of the group immediately before the deconsolidation is not significant, paragraphs (b) and (c) of this section shall not apply.

(5) *Examples.* For purposes of the examples in this section, all transactions described in section 362(a) are completed before October 22, 2004, and therefore are not subject to section 362(e)(2). The principles of this paragraph (g) are illustrated by the following examples:

Example 1. Transfers of property in avoidance of basis redetermination rule—(i) *Facts.* In Year 1, P forms S with a contribution of $100 in exchange for 100 shares of common stock of S which at that time represents all of the outstanding stock of S. S becomes a member of the P group. In Year 2, P contributes 20 shares of common stock of S to PS, a partnership, in exchange for a 20 percent capital and profits interest in a transaction described in section 721. In Year 3, P contributes Asset A with a basis of $50 and a value of $20 to PS in exchange for an additional capital and profits interest in PS in a transaction described in section 721. Also in Year 3, PS contributes Asset A to S and P contributes an additional $80 to S in transfers to which section 351 applies. In Year 4, S sells Asset A for $20, recognizing a loss of $30. The P group uses that loss to offset income of P. In Year 5, P sells its entire interest in PS for $40, recognizing a loss of $30.

(ii) *Analysis.* Pursuant to paragraph (g)(2) of this section, if P's contributions of S stock and Asset A to PS were undertaken with a view to avoiding the application of

the basis redetermination or the loss suspension rule, adjustments must be made such that the group does not obtain more than one tax benefit from the $30 loss inherent in Asset A.

Example 2. Transfers effecting a reimportation of loss—(i) *Facts.* In Year 1, P forms S with a contribution of Asset A with a value of $100 and a basis of $120, Asset B with a value of $50 and a basis of $70, Asset C with a value of $90 and a basis of $100 in exchange for all of the common stock of S and S becomes a member of the P group. In Year 2, in a transaction that is not part of a plan that includes the contribution, P sells the stock of S for $240, recognizing a loss of $50. At such time, the bases and values of Assets A, B, and C have not changed since their contribution to S. In Year 3, S sells Asset A, recognizing a $20 loss. In Year 3, S merges into M in a reorganization described in section 368(a)(1)(A). In Year 8, P purchases all of the stock of M for $300. At that time, M has a $10 net operating loss. In addition, M owns Asset D, which was acquired in an exchange described in section 1031 in connection with the surrender of Asset B. Asset C has a value of $80 and a basis of $100. Asset D has a value of $60 and a basis of $70. In Year 9, P has operating income of $100 and M recognizes $20 of loss on the sale of Asset C. In Year 10, P has operating income of $50 and M recognizes $50 of loss on the sale of Asset D.

(ii) *Analysis.* P's $50 loss on the sale of S stock is entirely attributable to duplicated loss. Therefore, pursuant to paragraph (g)(3) of this section, assuming the P group cannot establish otherwise, M's $10 net operating loss is treated as attributable to assets that were owned by S on the date of the disposition and that had bases in excess of value on such date. Without regard to any other limitations on the group's use of M's net operating loss, the P group cannot use M's $10 net operating loss pursuant to paragraph (g)(3)(iii)(D) of this section. Pursuant to paragraph (g)(3)(iv) of this section and §1.1502–32(b)(3)(iii)(D), such loss is treated as a noncapital, nondeductible expense of M incurred during the taxable year that it would otherwise be absorbed, namely in Year 9. In addition, the P group is denied the use of $10 of the loss recognized on the sale of Asset C. Finally, the P group is denied the use of $10 of the loss recognized on the sale of Asset D. Pursuant to paragraph (g)(3)(iv) of this section and §1.1502–32(b)(3)(iii)(D), each such disallowed loss is treated as a noncapital, nondeductible expense of M incurred during the taxable year that includes the date of the disposition of the asset with respect to which such loss was recognized.

Example 3. Transfers to avoid recognition of gain—(i) *Facts.* P owns all of the stock of S1 and S2. The S2 stock has a basis of $400 and a value of $500. S1 owns 50% of the stock of the S3 common stock with a basis of $150. S2 owns the remaining 50% of the S3 common stock with a basis of $100 and a value of $200 and one share of S3 preferred stock with a basis of $10 and a value of $9. P intends to sell all of its S2 stock to an unrelated buyer. P, therefore, engages in the following steps to dispose of S2 without recognizing a substantial portion of the built-in gain in S2. First, P causes a recapitalization of S3 in which S2's S3 common stock is exchanged for new S3 preferred shares. P then sells all of its S2 stock. Immediately after the sale of the S2 stock, S3 is a member of the P group.

(ii) *Analysis.* Pursuant to paragraph (b)(4) of this section, because S2 owns stock of S3 (another subsidiary of the same group) and, immediately after the sale of the S2 stock, S3 is a member of the group, then for purposes of applying paragraph (b) of this section, S2 is deemed to have transferred its S3 stock. Because S3 is a member of the group immediately after the transfer of the S2 stock and the S3 stock deemed transferred has a basis in excess of value, the group member's basis in the S3 stock is redetermined pursuant to paragraph (b)(1) of this section immediately prior to the sale of the S2 stock. Pursuant to paragraph (b)(1) of this section, the total basis of S3 stock held by members of the P group is allocated first to the S3 preferred shares, up to their value of $209, and then to the remaining shares of S3 common held by S1. S2's aggregate basis in the S3 preferred stock is increased from $110 to $209. This increase tiers up and increases P's basis in the S2 stock from $400 to $499. Accordingly, P will recognize only $1 of gain on the sale of its S2 stock. However, because the recapitalization of S3 was structured with a view to, and has the effect of, avoiding the recognition of gain on a disposition of stock by invoking the application of paragraph (b) of this section, paragraph (g)(4)(i) of this section applies. Accordingly, paragraph (b) of this section does not apply upon P's disposition of the S2 stock and P recognizes $100 of gain on the disposition of the S2 stock.

(h) *Application of other anti-abuse rules.* The rules of this section do not preclude the application of anti-abuse rules under other provisions of the Internal Revenue Code and regulations thereunder.

(i) [Reserved].

(j) *Effective date.* This section, except for paragraph (g)(3) of this section, applies with respect to stock transfers, deconsolidations of subsidiaries, determinations of worthlessness, and stock dispositions on or after March 10, 2006. For rules applicable before March 10, 2006, see §1.1502–35T(j) as contained in

26 CFR part 1 in effect on January 1, 2006.

[T.D. 9254, 71 FR 13010, Mar. 14, 2006]

SPECIAL TAXES AND TAXPAYERS

§ 1.1502–42 Mutual savings banks, etc.

(a) *In general.* This section applies to mutual s avings banks and other institutions described in section 593(a).

(b) *Total deposits.* In computing for purposes of section 593(b)(1)(B)(ii) total deposits or withdrawable accounts at the close of the taxable year, the total deposits or withdrawable accounts of other members shall be excluded.

(c) *Taxable income; taxable years for which the due date (without extensions) for filing returns is before March 15, 1983.* For taxable years for which the due date (without extensions) for filing returns is before March 15, 1983, a member's taxable income for purposes of section 593(b)(2) is determined under § 1.1502–27(b) (computed without regard to any deduction under section 593(b)(2)). In addition, for taxable years beginning after July 11, 1969, taxable income as computed under the preceding sentence is subject to the adjustments provided in section 593(b)(2)(E). See § 1.593–6A(b)(5).

(d) *Taxable income; taxable years for which the due date (without extensions) for filing returns is after March 14, 1983*—(1) *In general.* For a taxable year for which the due date (without extensions) for filing returns is after March 14, 1983, a thrift's taxable income for purposes of section 593(b)(2) is its tentative taxable income (as defined in paragraph (e)(1) of this section).

(2) *Definitions.* For purposes of this section:

(i) A *thrift* is a member described in section 593(a).

(ii) A *nonthrift* is a member that is not a thrift.

(e) *Tentative taxable income (or loss)*—(1) *Thrift.* For purposes of this section, a thrift's tentative taxable income (or loss) is its separate taxable income (determined under § 1.1502–12 without paragraph (q) thereof and without any deduction under section 593(b)), subject to the following adjustments in the following order:

(i) The adjustments described in paragraph (e)(3) of this section;

(ii) The adjustments described in section 593(b)(2)(E) for those thrifts with separate taxable income greater than zero (determined after the adjustments under paragraph (e)(3) of this section); and

(iii) The adjustments described in paragraph (f) of this section.

(2) *Nonthrift.* For purposes of this section, a nonthrift's tentative taxable income (or loss) is its separate taxable income (determined under § 1.1502–12), adjusted for the portion of the consolidated net operating loss deduction attributable to the member, the portion of the consolidated net capital loss carryover or carryback attributable to the member, and further adjusted as described in paragraph (e)(3) of this section.

(3) *Adjustments for all members.* For each member, the following adjustments taken into account in the computation of consolidated taxable income are included in determining its tentative taxable income (or loss) in order to adjust separate taxable income of the member to take into account certain consolidated items:

(i) The portions of the consolidated charitable contributions deduction and the consolidated dividends received deduction attributable to the member.

(ii) The member's capital gain net income, determined without any net capital loss carryover or carryback attributable to the member.

(iii) The member's net capital loss and section 1231 net loss, reduced by the portion of the consolidated net capital loss attributable to the member.

(f) *Adjustments for thrifts*—(1) *Reductions.* A thrift's separate taxable income (as adjusted under paragraph (e)(3) of this section) is reduced (but not below zero) by losses of thrifts and to the extent attributable to functionally related activities, losses of a nonthrift. Certain operating rules for determining the amount of the reductions are provided in paragraph (f)(4) of this section. The reductions are made in the following amounts in the following order:

(i) The thrift's allocable share (as determined under paragraph (h)(2) of this section) of another thrift's tentative taxable loss. That tentative taxable

loss is determined by including a deduction under section 593(b) (other than paragraph (2) thereof) for the year in which the loss arises.

(ii) The thrift's allocable share (as determined under paragraph (h)(3) of this section) of the portion of the consolidated net operating loss deduction attributable to it or another thrift. That consolidated net operating loss deduction is determined by including a deduction under section 593(b) (other than paragraph (2) thereof) for the year in which the loss arose. The portion of a consolidated net operating loss deduction attributable to another thrift is computed by excluding losses arising in taxable years for which the due date (without extensions) for filing returns is before March 15, 1983.

(iii) The thrift's allocable share (as determined under paragraph (h)(4) of this section) of the loss attributable to functionally related activities of a nonthrift (as determined under paragraph (g) of this section). For a rule netting that share against certain income attributable to functionally related activities of that nonthrift, see paragraph (f)(4)(iv) of this section.

(iv) The thrift's allocable share (as determined under paragraph (h)(3) of this section) of the portion of the consolidated net operating loss deduction attributable to functionally related activities of a nonthrift (as determined under paragraph (h)(5) of this section). That consolidated net operating loss deduction is determined by excluding losses arising in taxable years for which the due date (without extensions) for filing returns is before March 15, 1983. For a rule netting that share against certain income attributable to functionally related activities of that nonthrift, see paragraph (f)(4)(iv) of this section.

(2) *Increases.* (i) A thrift's separate taxable income (as adjusted under paragraphs (e)(3) and (f)(1) of this section) is increased in a subsequent consolidated return year to restore reductions made in a prior consolidated return year to a thrift's separate taxable income by reason of losses of a nonthrift. This increase is the amount of the thrift's allocable share (as determined under paragraph (h)(6) of this section) of the income attributable to functionally related activities of a nonthrift in a consolidated return year and is made only in that year. This increase is made only if both the thrift and the nonthrift were members of the group in the consolidated return years in which both the reduction and increase are made.

(ii) This subdivision (ii) limits the increases to a thrift's separate taxable income to assure that income of a particular nonthrift is used to restore reductions of a thrift only to the extent that such nonthrift's losses reduced the thrift's income. Therefore, as of the end of a consolidated return year, the cumulative increases to a thrift's tentative taxable income (by reason of income attributable to functionally related activities of a nonthrift) may not exceed the cumulative reductions to the thrift's separate taxable income made (by reason of the nonthrift's functionally related activities) under paragraph (f)(1) (iii) and (iv) of this section in the current and all prior consolidated return years during which both the thrift institution and the nonthrift institution were members of the group.

(iii) For a netting rule, see paragraph (f)(4)(iv) of this section.

(3) *Special Rule.* (i) If a carryback to a thrift's separate taxable income diminishes the reduction to a thrift's separate taxable income for a prior consolidated return year otherwise required by paragraph (f)(1) (iii) or (iv) of this section, then any increases to a thrift's separate taxable income under paragraph (f)(2) of this section for an intervening consolidated return year must be recomputed to take into account the effect of such carryback. Thus, if a net operating loss attributable to a thrift is carried back and completely offsets the thrift's separate taxable income (before the reductions under paragraph (f)(1) (iii) or (iv) or this section), any increase to the thrift's separate taxable income under paragraph (f)(2) of this section (attributable to a reduction in the year to which the loss is carried) for an intervening consolidated return year will be eliminated. The recomputation required by this subparagraph (3) must be reflected on an amended return for the intervening consolidated return year

for which the increase was previously reported. See example (2) in paragraph (j) of this section.

(ii) If a deficiency for an intervening consolidated return year results from the application of paragraph (f)(3)(i) of this section with respect to an item to which section 6501(h) applies, the deficiency may be assessed at any time within the period described in section 6501(h).

(iii) For purposes of chapter 67 of the Code (relating to interest), the last date prescribed for payment of any tax owed as a result of the application of paragraph (f)(3)(i) of this section is deemed to be the last day of the taxable year for which the item carried back arose.

(4) *Operating rules.* For purposes of paragraphs (d) through (j) of this section:

(i) The portion of a consolidated net operating loss deduction attributable to a member is determined as follows:

(A) First, determine under §§1.1502–21(b) (or §1.1502–79A(a)(3), as appropriate) the portion of each consolidated net operating loss attributable to the member for the particular year in which the loss arose.

(B) Second, apply the anti-double-counting rule in paragraph (h)(3)(iii) of this section so as not to take the same loss into account twice.

(C) Finally, apply the loss absorption limit in paragraph (f)(4)(iii) of this section to the total amount of the consolidated net operating loss deduction from a particular loss year.

(ii) Capital loss carryovers and carrybacks shall be taken into account in a manner consistent with the principles of paragraphs (d) through (j) of this section.

(iii) This subdivision (iii) prescribes a loss absorption limit. The total amount of the consolidated net operating loss deduction from a given year (loss year) taken into account as reductions under paragraph (f)(1) of this section for another year (absorption year) shall not exceed the amount of the consolidated net operating loss deduction attributable to the loss year absorbed in computing consolidated taxable income for the absorption year. For this purpose, consolidated taxable income for the absorption year shall include a deduction under section 593(b) (other than paragraph (2) thereof) for each thrift member.

(iv) This subdivision (iv) prescribes a rule for netting in certain cases income attributable to functionally related activities of a nonthrift in a consolidated return year (''income year'') against losses attributable to functionally related activities of that nonthrift which arise in a consolidated return year (''loss year''). That nonthrift's income is netted against the portion of that nonthrift's loss which would otherwise be applied in a consolidated return year (''reduction year'') under paragraph (f)(1) (iii) or (iv) of this section to reduce a thrift's tentative taxable income, but:

(A) Only if the income year is not later than the loss year and the reduction year, and

(B) Only to the extent the income had not previously been taken into account under paragraph (f)(2) of this section or this subdivision (iv) as of the close of the later of the loss year and the reduction year.

(g) *Income (or loss) attributable to functionally related activities of a nonthrift*—(1) *In general.* For purposes of this section, the income (or loss) attributable to functionally related activities of a nonthrift is the income (or loss) of the nonthrift:

(i) Attributable to the provision of assets or the rendition of services to a thrift (such as the leasing of office space or providing computer or financial services), or

(ii) Derived from the assets described in section 7701(a)(19)(C) (iii) through (x), but only if such assets comprise 5 percent or more of the gross assets of the nonthrift.

(2) *Amount of income (or loss).*The amount of income (or loss) from such activities is the excess of (i) gross income from such activities over (ii) the deductions of the nonthrift allocable and apportionable to that gross income under the principles of §1.861–8. The loss attributable to functionally related activities of a nonthrift is the excess (if any) of such deductions over such gross income. That loss, however, may not exceed the amount of the tentative taxable loss of that nonthrift (determined by excluding losses arising

in taxable years for which the due date (without extensions) for filing returns is before March 15, 1983).

(h) *Allocation of income and losses*—(1) *In general.* Paragraphs (h)(2) through (5) of this section provides rules for allocating different losses among thrifts that have tentative taxable income greater than zero. Generally, these allocations are made in the order listed in paragraph (f)(1) of this section and are based upon the relative tentative taxable income of the thrifts to which the particular loss is allocated. For purposes of each allocation under a subdivision of such paragraph (f)(1), the tentative taxable income of the thrifts used in making this allocation is reduced by the thrift's allocable share of losses allocated to the thrift under a prior subdivision of such paragraph (f)(1). Accordingly, for purposes of this paragraph (h), tentative taxable income is determined without regard to paragraph (f) of this section, except as otherwise provided. Paragraph (h)(6) of this section provides rules for allocating income attributable to functionally related activities of a nonthrift based upon the relative reductions to thrift income made on account of that nonthrift.

(2) *Allocation of tentative taxable loss of other thrifts.* For purposes of paragraph (f)(1)(i) of this section, a thrift's allocable share of another thrift's tentative taxable loss is the loss multiplied by a fraction. The numerator of the fraction is the tentative taxable income (if greater than zero) of the thrift, and the denominator is the aggregate of such tentative taxable income of each thrift.

(3) *Allocation of portions of a consolidated net operating loss deduction.* (i) For purposes of paragraph (f)(1)(ii) of this section, a first thrift's allocable share of the portion of the consolidated net operating loss deduction attributable to another thrift is determined under paragraph (h)(2) of this section as if that portion were a tentative taxable loss of that other thrift and by computing tentative taxable income under such paragraph (h)(2) by taking into account paragraph (f)(1)(i) of this section. A thrift's allocable share of the portion of the consolidated net operating loss deduction attributable to that thrift is equal to that entire portion.

(ii) For purposes of paragraph (f)(1)(iv) of this section, a thrift's allocable share of the portion of a consolidated net operating loss deduction attributable to functionally related activities of a nonthrift (determined under paragraph (h)(5) of this section) is determined under paragraph (h)(4) of this section as if that portion were a loss attributable to functionally related activities of the nonthrift and by computing tentative taxable income under such paragraph (h)(4) by taking into account paragraph (f)(1) (i), (ii), and (iii) of this section.

(iii) This subdivision (iii) prevents the ''double-counting'' of losses. The reduction to the tentative taxable income of a thrift is diminished to the extent the loss that gave rise to the reduction has previously been taken into account in reducing a thrift's tentative taxable income. Thus, any loss taken into account as a reduction to a thrift's separate taxable income under any subdivision of paragraph (f)(1) of this section shall be reduced (but not below zero) to the extent taken into account:

(A) In a prior consolidated return year under any subdivision of such paragraph (f)(1) or

(B) In the current consolidated return year under a previous subdivision of such paragraph (f)(1).

(4) *Allocation of loss attributable to functionally related activities of a nonthrift.* For purposes of paragraph (f)(1)(iii) of this section, a thrift's allocable share of a loss attributable to functionally related activities of a nonthrift is determined by multiplying the loss by a fraction. The numerator of the fraction is the tentative taxable income (if greater than zero) of the thrift (taking into account paragraph (f)(1) (i) and (ii) of this section) and the denominator is the aggregate of such tentative taxable income (so determined) of each thrift.

(5) *Portion of the consolidated net operating loss deduction attributable to functionally related activities of a particular*

nonthrift. The portion of the consolidated net operating loss deduction attributable to functionally related activities of a particular nonthrift is the lesser of the following two amounts:

(i) The portion of the consolidated net operating loss deduction attributable to that nonthrift.

(ii) The aggregate of the losses attributable to functionally related activities of that nonthrift for the taxable years in which the consolidated net operating loss deduction arose.

(6) *Allocation of income attributable to functionally related activities of a nonthrift.* For purposes of paragraph (f)(2) of this section, a thrift institution's allocable share of the income attributable to functionally related activities of a nonthrift is determined by multiplying that income by a fraction. The numerator of the fraction is the amount of the cumulative reductions referred to in paragraph (f)(2)(ii) of this section (minus the cumulative increases under paragraph (f)(2) of this section) made on account of that nonthrift for the thrift and the denominator is the sum of such cumulative reductions (minus such cumulative increases) made on account of that nonthrift for all thrifts.

(7) *Proper accounting* The provisions of section 482 apply in determining a thrift institution's tentative taxable income, and in determining the gross income and deductions attributable to functionally related activities. For example, an expense such as the salary of an individual who performs services for both a thrift and a nonthrift must be allocated in a manner that fairly reflects the value of the services rendered to each.

(i) [Reserved]

(j) *Examples.* The provisions of this section may be illustrated by the following examples. In each example the letter ''T'' for a member denotes a thrift and the letters ''NT'' denote a nonthrift. Also, in each example, a thrift loss includes a bad debt deduction under section 593(b) (other than paragraph (2) thereof) for such year and a thrift with income would have such a bad debt deduction of zero.

Example (1). (a) In 1983, corporations T1, T2, NT1, and NT2 are formed. These corporations constitute an affiliated group that files a consolidated return on the basis of a calendar year. For 1983, 1984, and 1985, the tentative taxable income (or loss) of each member (before the application of paragraph (f) of this section) is as follows:

	1983	1984	1985
NT1	$(60)	$(140)	$15
T1	1,000	500	750
NT2	(90)	(220)	150
T2	(300)	400	250

In 1983, NT1, in addition to its other business activities, acted as a collection agency for T1. Deductions attributable to those activities exceeded gross income attributable to those activities by $70. NT1's other activities generated a $10 gain. In 1984 and 1985, NT1 acted as a collection agency for T1 as its sole activity.

(b) The tentative taxable incomes of T1 and T2 for 1983 (determined under paragraph (e) of this section) as of the close of that year are adjusted by paragraph (f) of this section as follows:

(i) T1's tentative taxable income:		
T1's tentative taxable income (before the application of paragraph (f) of this section		$1,000
Less:		
T2's tentative taxable loss	$300	
NT1's functionally related loss (limited by NT1's overall loss)	60	360
T1's tentative taxable income for 1983		640

(ii) T2's tentative taxable income for 1983 is zero.

(c) The tentative taxable incomes of T1 and T2 for 1984 (determined under paragraph (e) of this section as of the close of that year) are adjusted by paragraph (f) of this section as follows:

(i) T1's tentative taxable income:

T1's tentative taxable income (before the application of paragraph (f) of this section)	$500
Less:	
T1's allocable portion of NT1's functionally related loss (140×500/(500+400))	78
T1's tentative taxable income for 1984	422

(ii) T2's tentative taxable income:	
T2's tentative taxable income (before the application of paragraph (f) of this section	400
Less:	
T2's allocable portion of NT1's functionally related loss (140×400/(500+400))	62
T2's tentative taxable income for 1984	338

(d) For 1985, the amount under paragraph (f) (2) of this section for both T1 and T2 is $15 (NT1's tentative taxable income from functionally related activities for 1985). For 1983 and 1984, T1's tentative taxable income was reduced by a total of $138 (*i.e.*, $60 + $78) due to NT1's losses from functionally related activities. For 1984, T2's tentative taxable income was reduced by $62 due to those losses. Accordingly, under paragraph (f)(2) of this

section, T1's tentative taxable income for 1983 is increased by $10 (*i.e.*, $15x$138/($138+$62)) and T2's tentative taxable income is increased by $5 (*i.e.*, $15x$62/($138+$62)).

Example (2). (a) In 1983, corporations T, NT1, and NT2 are formed. these corporations constitute an affiliated group. NT2 provides computer services to T as its sole activity. For the calendar years 1983, 1984, and 1985, the group files a consolidated return. The tentative taxable income of each member (before the application of paragraph (f) of this section) is as follows:

	1983	1984	1985
T	$100	$0	$(200)
NT1	200	0	100
NT2	(20)	20	0

(b) Under paragraph (f)(1) of this section, T's tentative taxable income for 1983 (determined at the close of that year) is reduced to $80 (*i.e.*, $100 less NT2's $20 loss). For 1984, under paragraph (f)(2) of this section, T's tentative taxable income is increased by $20. For 1985, the consolidated net operating loss of $100 (all of which is attributable to T) is carried back to 1983. That $100 carryback is not limited by paragraph (f)(4)(iii) of this section, since consolidated taxable income for 1983 available for absorption after a bad debt deduction of $0 under section 593(b) (other than paragraph (2) thereof) for that year is $280. Accordingly, under paragraph (f)(1)(ii) of this section, T's tentative taxable income is reduced by the full $100, which is taken into account before the previous reduction of T's tentative taxable income under paragraph (f)(1)(iii) of this section. In addition, under paragraph (f)(3)(i) of this section, the group must file an amended return for 1984 to eliminate the increase to T's bad debt deduction for 1984 by reason of the consolidated net operating loss carryback to 1983.

Example (3). (a) T and NT are formed in 1983 and are the only members of an affiliated group filing a consolidated return on a calendar year basis. NT provided computer services to T as its sole activity. For 1983, 1984, and 1985, the tentative taxable income of T and NT (before the application of paragraph (f) of this section) is as follows:

	1983	1984	1985
T	$100	$0	$0
NT	0	40	(40)

(b) At the close of 1983, T's tentative taxable income is $100. For 1985, however, the group has a consolidated net operating loss of $40, all of which is attributable to NT's functionally related activities and which is carried back to 1983. However, T's tentative taxable income for 1983 is not reduced under paragraph (f)(1)(iv) of this section, since, under paragraph (f)(4)(iv) of this section, NT's 1984 income attributable to functionally related activities of $40 is netted against that $40 carryback.

Example (4). (a) In 1983, corporations T1, T2, NT1, and NT2 are formed. For calendar years 1983, 1984, and 1985, the affiliated group consisting of T1, T2, NT1, and NT2 filed a consolidated return. NT1 provided computer services to T1 as its sole activity. The tentative taxable income of each member (before the application of paragraph (f) of this section) is as follows:

	1983	1984	1985
T1	(50)	100	30
T2	(50)	(80)	(25)
NT1	(50)	(40)	(99)
NT2	120	30	100

(b) For 1983, the group has a consolidated net operating loss of $30, apportioned $10 each to T1, T2, and NT1 under § 1.1502–79A(a)(3). For 1984, the only thrift with tentative taxable income greater than zero (before applying paragraph (f) of this section) is T1. That tentative taxable income of $100 is first reduced to $20 by T2's $80 1984 loss under paragraph (f)(1)(i) of this section. Next, T1's remaining tentative taxable income of $20 is reduced to $10 by the portions attributable to T1 and T2 of the 1983 consolidated net operating loss carryover to 1984 under paragraph (f)(1)(ii) of this section. The sum of those portions is limited to $10 (*i.e.*, $5 each) by paragraph (f)(4)(iii) of this section because 1984 consolidated taxable income available for absorption after a bad debt deduction under section 593(b) (other than paragraph (2) thereof) for each thrift member for that year is $10. For that reason, paragraph (f)(4)(iii) of this section also prevents any further portion of that carryover from being taken into account in 1984 as a reduction under paragraph (f)(1) of this section. T1's remaining tentative taxable income of $10 is reduced to zero, under paragraph (f)(1)(iii) of this section, by NT1's 1984 tentative taxable loss.

(c) For 1985, the only thrift with tentative taxable income greater than zero (before applying paragraph (f) of this section) is T1. T1's tentative taxable income for 1985 of $30 is reduced to $5 by T2's 1985 loss of $25 under paragraph (f)(1)(i) of this section. Next, the portions attributable to T1 and T2 of the consolidated net operating loss carryover from 1983 to 1985 for purposes of paragraph (f)(1)(ii) of this section must be determined. That determination is made without applying the rules for loss absorption in computing consolidated taxable income under § 1.1502–21A(b)(3). Those portions are instead determined in 3 steps under paragraph (f)(4)(i) of this section. The first of those steps is to determine each of T1's and T2's attributable portions of the 1983 consolidated

net operating loss which under § 1.1502–79A (a)(3) is $10 or $20 for both thrifts. The second of those steps is to apply the anti-double counting rule under paragraph (h)(3)(iii) of this section to reduce that $20 amount by the $10 total of the two $5 portions attributable to T1 and T2 of the consolidated net operating loss carryover from 1983 to 1984 taken into account as reductions to T1's tentative taxable income for 1984 under paragraph (f)(1)(ii) of this section. That leaves a $10 total amount available to be taken into account as reductions to T1's remaining tentative taxable income of $5 for 1985 under paragraph (f)(1)(ii) of this section. Under the third of those steps that $10 amount, however, is limited, under the loss absorption limit of paragraph (f)(4)(iii) of this section, to the $6 of the 1983 consolidated net operating loss carryover to 1985 which is absorbed in computing consolidated taxable income for 1985 since 1985 consolidated taxable income available for absorption after a bad debt deduction under section 593(b) (other than paragraph (2) thereof) for that year is $6 (*i.e.*, $30+$100−$99−$25). Because separate taxable income cannot be reduced below zero under paragraph (f)(1) of this section, T1's remaining tentative taxable income of $5 is thus reduced to zero by the portions attributable to T1 and T2, respectively, of the consolidated net operating loss carryover from 1983 to 1985 under paragraph (f)(1)(ii) of this section.

(Sec. 1502, 7805, Internal Revenue Code of 1954 (68A Stat. 367 and 917; (26 U.S.C. 1502 and 7805))

[T.D. 7637, 44 FR 46841, Aug. 9, 1979, as amended by T.D. 7815, 47 FR 11516, Mar. 17, 1982; T.D. 7876, 48 FR 11258, Mar. 17, 1983; 48 FR 13165, Mar. 30, 1983; T.D. 8677, 61 FR 33324, June 27, 1996; T.D. 8823, 64 FR 36100, July 2, 1999]

§ 1.1502–43 Consolidated accumulated earnings tax.

(a) *Group subject to tax*—(1) *General rule.* For a group filing a consolidated return for the taxable year, the accumulated earnings tax under section 531 is imposed on consolidated accumulated taxable income (as defined in paragraph (b) of this section). This tax applies to any group that is formed or availed of to avoid or prevent the imposition of the individual income tax on the shareholders of either any of its members or any other corporation by permitting earnings and profits to accumulate instead of dividing or distributing them. Section 531 and this section do not apply to a group that is treated as a ''personal holding company'' under section 542(a)(1) as a result of the application of section 542(b)(1). Special rules are provided in this section for other groups which include one or more personal holding companies.

(2) *Evidence of purpose to avoid income tax.* (i) Under section 533(a), the fact that the group's earnings and profits are permitted to accumulate beyond the reasonable needs of its business is determinative of the purpose to avoid the income tax with respect to shareholders, unless the group by the preponderance of the evidence proves to the contrary.

(ii) The fact that a group is a mere holding or investment group is prima facie evidence of the group's purpose to avoid the income tax with respect to the shareholders. The activities of a member which is a personal holding company are not taken into account in determining if the group is a mere holding or investment group.

(3) *Earnings and profits.* For purposes of this paragraph (a) and paragraph (d) of this section, the following rules apply:

(i) If no member of the group is a personal holding company, the group's earnings and profits are the aggregate of the earnings and profits (or deficit) of each corporation that is a member at the close of the taxable year, determined in accordance with § 1.1502–33.

(ii) Earnings and profits resulting from the application of § 1.1502–33(b) are not taken into account.

(iii) Earnings and profits resulting from the disposition of a member's stock are determined without regard to the stock basis adjustments under §§ 1.1502–32 and 1.1502–33(c)(1).

(4) *Reasonable needs of the business.* The reasonable needs of the group's business include the reasonable needs of the business of any corporation (other than a personal holding company) that is a member at the close of the taxable year. Thus, the earnings and profits of one member may be accumulated with respect to the reasonable business needs of another member. If under § 1.537–3(b) the business of a nonmember corporation is considered the business of a member, then the earnings and profits of any member may be accumulated with respect to

such nonmember's reasonable business needs.

(5) *Burden of proof.* The notification described in section 534(b) and the statement described in section 534(c) are made to or by the common parent corporation in accordance with § 1.1502–77.

(b) *Consolidated accumulated taxable income*—(1) *In general.* ''Consolidated accumulated taxable income'' is the group's consolidated taxable income determined under § 1.1502–11 adjusted in the manner provided in paragraph (b)(2) of this section, minus the sum of—

(i) The consolidated dividends paid deduction determined under paragraph (c) of this section and

(ii) The consolidated accumulated earnings credit determined under paragraph (d) of this section.

(2) *Adjustments to consolidated taxable income.* For purposes of paragraph (b)(1) of this section, consolidated taxable income is adjusted as follows:

(i) Under section 535(b)(1), the deduction for taxes is the excess of—

(A) The consolidated liability for tax determined without § 1.1502–2 (b) through (d) and without the foreign tax credit provided by section 33, over

(B) The consolidated foreign tax credit determined pursuant to § 1.1502–4. Foreign taxes deductible under § 1.535–2(a)(2) are also allowed as a deduction under section 535(b)(1).

(ii) The consolidated charitable contributions deduction under § 1.1502–24 does not apply. Under section 535(b)(2), there shall be allowed the aggregate charitable contributions of the members allowable under section 170, determined without section 170 (b)(2) and (d)(2).

(iii) Under section 535(b)(3), the deductions provided in §§ 1.1502–26 and 1.1502–27 are not allowed.

(iv) Under section 535(b)(4), the consolidated net operating loss deduction described in §§ 1.1502–21(a) or 1.1502–21A(a), as appropriate is not allowed.

(v) Under section 535(b)(5), there is allowed as a deduction the consolidated net capital loss, determined under §§ 1.1502–22(a) or 1.1502–22A(a), as appropriate .

(vi) Under section 535(b)(6), there is allowed as a deduction an amount equal to (A) the excess of the consolidated net long-term capital gain (determined under §§ 1.1502–22(a) or 1.1502–41A, as appropriate over the consolidated net short-term capital loss (determined under §§ 1.1502–22T(a) or 1.1502–41A, as appropriate), minus (B) the taxes attributable to this excess. This consolidated net short-term capital loss is determined without the consolidated net capital loss carryovers or carrybacks to the taxable year.

(vii) Under section 535(b)(7), the consolidated net capital loss carryovers and carrybacks are not allowed. See §§ 1.1502–22(b) or 1.1502–22A(b), as appropriate.

(viii) Sections 1.1502–15A (Limitations on built-in deductions not subject to § 1.1502–15) and 1.1502–15 do not apply.

(3) *Personal holding company a member.* If a member is a personal holding company for the taxable year—

(i) [Reserved]

(ii) In applying paragraph (b)(2)(i) of this section, consolidated liability for tax (as determined under that paragraph (b)(2)(i)) is reduced by the portion thereof allocable to that member under section 1552(a) (1), (2), (3), or (4) (or § 1.1502–33(d)), whichever is applicable. The consolidated foreign tax credit is computed by excluding the taxable income and any foreign taxes paid or accrued by that member, and foreign taxes deductible under § 1.535–2(a)(2) do not include foreign taxes attributable to that member.

(c) *Consolidated dividends paid deduction*—(1) *General rule.* For purposes of this section, the consolidated dividends paid deduction is the aggregate of the members' deductions under section 561(a) (1) and (2). This deduction is determined by excluding deductions for dividends paid to other members.

(2) *Exception for certain personal holding companies.* [Reserved]

(3) *Dividends paid defined.* For purposes of this paragraph (c), ''dividends paid'' and ''dividend (or portion thereof) paid'' include amounts treated as dividends paid during the taxable year under sections 562(b)(1), 563, and 565 (relating respectively to liquidating distributions, dividends paid after year end, and consent dividends).

(4) *Examples.* This paragraph (c) can be illustrated by the following examples:

Example (1). Corporations P and S constitute an affiliated group which files a consolidated return on a calendar year basis for 1984 and 1985. P owns all of S's stock and two individuals own all of P's stock. Neither member of the group is a personal holding company for 1984. Assume that on December 15, 1984, S pays a dividend (as defined in section 316 (a)) of $2,000 to P, and P pays a dividend (as so defined) of $3,000 on January 15, 1985, to its individual shareholders. All dividends are paid in cash and are pro rata with no preference as to any shares or class of stock. For purposes of this paragraph (c), the consolidated dividends paid deduction for 1984 is $3,000, *i.e.*, the dividend paid on January 15, 1985, by P to its nonmember shareholders. See section 563 (a). The $2,000 dividend paid by S to P is not taken into account in computing the consolidated dividends paid deduction.

Example (2). [Reserved]

(d) *Consolidated accumulated earnings credit.* [Reserved]

[T.D. 7937, 49 FR 3462, Jan. 27, 1984, as amended by T.D. 8560, 59 FR 41674, Aug. 15, 1994; T.D. 8677, 61 FR 33324, June 27, 1996; T.D. 8560, 62 FR 12098, Mar. 14, 1997; T.D. 8823, 64 FR 36100, July 2, 1999]

§ 1.1502–44 Percentage depletion for independent producers and royalty owners.

(a) *In general.* The sum of the percentage depletion deductions for the taxable year for all oil or gas property owned by all members, plus any carryovers under section 613A(d)(1) or paragraph (d) of this section from a prior taxable year, may not exceed 65 percent of the group's adjusted consolidated taxable income (under paragraph (b) of this section) for the consolidated return year.

(b) *Adjusted consolidated taxable income.* For purposes of this section, adjusted consolidated taxable income is an amount (not less than zero) equal to the group's consolidated taxable income determined without:

(1) Any depletion with respect to an oil or gas property (other than a gas property with respect to which the depletion allowance for all production is determined pursuant to section 613A(b)) for which percentage depletion would exceed cost depletion in the absence of the depletable quantity limitations contained in section 613A(c) (1) and (6) and the consolidated taxable income limitation contained in paragraph (a) of this section.

(2) Any consolidated net operating loss carryback to the consolidated return year under §§ 1.1502–21 or 1.1502-21A (as appropriate) and

(3) Any consolidated net capital loss carryback to the consolidated return year under §§ 1.1502–22 or 1.1502-22A (as appropriate).

(c) *Allocation to oil and gas properties.* The maximum amount allowable as a deduction under section 613A(c), after the application of paragraph (a) of this section, is allocated to properties held by members in accordance with the regulations under section 613A(d). Those regulations provide for an initial allocation and possible reallocation of the maximum allowable percentage depletion deduction among oil and gas properties. Thus, if, after the initial allocation, cost depletion exceeds the percentage depletion that would be allowable for a particular oil or gas property, cost depletion must be used for that property and the maximum amount of percentage depletion allowable as a deduction for the group is reallocated among only the remaining properties held by all members.

(d) *Carryover for disallowed amounts.* (1) If any amount is disallowed as a deduction for the taxable year by reason of section 613A(d)(1) or paragraph (a) of this section, the disallowed amount for each oil or gas property is treated as an amount allowed as a deduction under section 613A(c), for the following taxable year for the member that owned the property, in accordance with the regulations under section 613A and paragraphs (a) and (d)(2) of this section.

(2) Any amount that was disallowed as a deduction in a separate return limitation year of a member may be carried to a consolidated return year only to the extent that 65 percent of the excess determined under paragraph (d)(3) of this section exceeds the sum of the otherwise allowable percentage depletion deductions for the member's oil and gas properties for the year.

(3) The excess determined in this subparagraph (3) for a member is the excess, if any, of adjusted consolidated

taxable income for the year under paragraph (b) of this section over that income recomputed by excluding the items of income and deductions of the member.

(e) *Effective date.* This section applies to taxable years for which the due date (without extensions) for filing returns is after September 30, 1980.

[T.D. 7725, 45 FR 65561, Oct. 3, 1980, as amended by T.D. 8677, 61 FR 33324, June 27, 1996; T.D. 8823, 64 FR 36100, July 2, 1999]

§ 1.1502–47 Consolidated returns by life- nonlife groups.

(a) *Scope*—(1) *In general.* Under section 1504(b)(2), insurance companies that are taxed under section 802 or 821 (relating respectively to life insurance companies and to certain mutual insurance companies) are not treated as includible corporations for purposes of determining under section 1504(a) the existence of an affiliated group and the composition of its membership. Section 1504(c)(2) provides an election whereby certain life insurance companies and mutual insurance companies may be treated as includible corporations, and thus members, of a group composed of other includible corporations. This section provides regulations for the making of this election and for the determination of an electing group's composition and its consolidated tax liability.

(2) *General method of consolidation*—(i) *Subgroup method.* The regulations adopt a subgroup method to determine consolidated taxable income. One subgroup is the group's nonlife companies (including those taxable under section 821). The other subgroup is the group's life insurance companies. Initially, the nonlife subgroup computes nonlife consolidated taxable income and the life subgroup computes consolidated partial life insurance company taxable income. A subgroup's income may in effect be reduced by a loss of the other subgroup. The life subgroup losses consist of consolidated loss from operations and life consolidated net capital loss. The nonlife subgroup losses consist of nonlife consolidated net operating loss and nonlife consolidated net capital loss. Consolidated taxable income is therefore defined in pertinent part as the sum of nonlife consolidated taxable income and consolidated partial life insurance company taxable income reduced by life subgroup losses or nonlife subgroup losses.

(ii) *Subgroup loss.* A subgroup loss does not actually affect the computation of nonlife consolidated taxable income or consolidated partial life insurance company taxable income. It merely constitutes a bottom-line adjustment in reaching consolidated taxable income. Furthermore, one subgroup's loss must first be carried back against income of the same subgroup before it may be used as a setoff against the second subgroup income in the taxable year the loss arose. (See section 1503(c)(1)). The carryback of the losses from one subgroup may not be used to offset income of the other subgroup in the year to which the loss is to be carried. This carryback of the first subgroup's loss may ''bump'' the second subgroup's loss that in effect previously reduced the income of the first subgroup. The second subgroup's loss that is bumped in appropriate cases may in effect reduce a succeeding year's income of the second or first subgroup. This approach gives the group the tax savings of the use of losses but the bumping rule assures that insofar as possible life deductions will be matched against life income and nonlife deductions against nonlife income.

(iii) *Carryover of subgroup loss.* A subgroup's loss may be used in a succeeding year, but in any particular succeeding year the loss must be used to reduce the income of the same subgroup before it may be used as a setoff against the other subgroup's income.

(3) *Authority.* This section is prescribed under the authority of sections 1502, 1503(c), 1504(c)(2), and 7805(b).

(4) *Other provisions.* The provisions of §§ 1.1502–1 through 1.1502–80 apply unless this section provides otherwise. Further, unless otherwise indicated in this section, a term used in this section has the same meaning as in sections 801–844.

(b) *Effective date.* This section is effective for taxable years for which the due date (without extensions) for filing returns is after March 14, 1983.

(c) *Cross references.* The following table provides cross references for

some of the definitions and operating rules that are relevant in making the election and determining the group's composition and its tax liability:

Item and Paragraph

General definitions (d).
Eligible corporation (Five-year rules) (d)(12).
Election (e).
Consolidated taxable income (g).
Nonlife consolidated taxable income (h).
Consolidated partial life insurance company taxable income (j).
Nonlife subgroup losses (m).
Life subgroup losses (n).
Alternative tax (o).

(d) *Definitions.* For purposes of this section:

(1) *Life insurance company.* The term ''life company'' means a life insurance company as defined in section 801. Section 801 applies to each company separately.

(2) *Mutual insurance company.* The term ''mutual company'' means a mutual insurance company taxable under section 821(a)(1).

(3) *Life insurance company taxable income.* The term ''life insurance company taxable income'' is referred to as LICTI. The terms ''TII'', ''GO'', and ''LO'' refer, respectively, to taxable investment income (section 804), gain from operations (section 809), and loss from operations (section 812). The term ''consolidated partial LICTI'' refers to consolidated LICTI without section 802(b)(3).

(4) *Group.* The term ''group'' means an affiliated group of corporations (as defined in section 1504(a)). Unless otherwise indicated in this section, a group's composition is determined without section 1504(b)(2).

(5) *Member.* The term ''member'' means a corporation (including the common parent) that is an includible corporation in the group. A life company or mutual company is tentatively treated as a member for any taxable year for purposes of determining if it is an eligible corporation under paragraph (d)(12) of this section and therefore if it is an includible corporation under section 1504(c)(2). If such a company is eligible and includible (under section 1504(c)(2)), it will actually be treated as a member of the group.

(6) *Life member.* A life member is a member of the group that is a life company.

(7) *Nonlife member.* A nonlife member is a member of the group that is not a life company.

(8) *Life subgroup.* A life subgroup is composed of those members that are life members. If the group has only one life member, it constitutes a life subgroup.

(9) *Nonlife subgroup.* A nonlife subgroup is composed of those members that are nonlife members. If the group has only one nonlife member, it constitutes a nonlife subgroup.

(10) *Separate return year.* The term ''separate return year'' means a taxable year of a corporation for which it files a separate return or for which it joins in the filing of a consolidated return by another group. For purposes of this subparagraph (10), the term ''group'' is defined with regard to section 1504(b)(2) for years in which an election under section 1504(c)(2) is not in effect. Thus, a separate return year includes a taxable year for which that election is not in effect.

(11) *Separate return limitation year.* Section 1.1502–1(f)(2) provides exceptions to the definition of the term ''separate return limitation year''. For purposes of applying those exceptions to this section, for taxable years ending after December 31, 1980, the term ''group'' is defined without regard to section 1504(b)(2) and the definition in this subparagraph (11) applies separately to the nonlife subgroup in determining nonlife consolidated taxable income under paragraph (h) of this section and to the life subgroup in determining consolidated partial LICTI under paragraph (j) of this section. Paragraph (m)(3)(ix) of this section defines the term ''separate return limitation year'' for purposes of determining whether the losses of one subgroup may be used against the income of the other subgroup.

(12) *Eligible corporations*—(i) *In general.* A corporation is an eligible corporation for a taxable year of a group only if, throughout every day of the base period the corporation:

(A) Was in existence and a member of the group determined without the exclusions in section 1504(b)(2) (see paragraphs (d)(12) (iii) through (vi) of this section),

(B) Was engaged in the active conduct of a trade or business (''active business''),

(C) Did not experience a change in tax character (see paragraph (d)(12)(vii) of this section), and

(D) Did not undergo disproportionate asset acquisitions (see paragraph (d)(12)(viii) of this section).

(ii) *Base period.* The base period consists of the common parent's five taxable years immediately preceding the group's taxable year for which the consolidated return and the determination of eligibility are made. Eligibility is determined for each consolidated return year beginning with the first year for which the election under section 1504(c)(2) is effective.

(iii) *In existence.* Except as provided in paragraphs (d)(12) (v) and (vi) of this section, a corporation organized after the base period begins is not eligible even though it is a member of the group immediately after its organization. For purposes of this subdivision (iii), a corporation that was a party to a reorganization described in section 368(a)(1)(F) shall be treated as the same entity both before and after the reorganization.

(iv) *Membership period.* Except as provided in paragraphs (d)(12) (v) and (vi) of this section, a corporation must have been a member of the group throughout the base period to be eligible. Thus, an ineligible corporation includes one whose stock was acquired from outside the group at any time during the base period or one which was a member of a different group (whether by application of reverse acquistion rules in §1.1502–75(d)(3) or otherwise) at any time during the base period. For purposes of this subdivision (iv), the common parent of a group is treated as constituting a group (and hence is a member) during any period when it was not a member of an affiliated group within the meaning of section 1504(a) (applied without section 1504(b)(2)).

(v) *Tacking rule.* The period during which an ''old'' corporation is in existence and a member of the group engaged in active business is included in (or ''tacks'' onto) the period for the ''new'' corporation if the following five conditions listed in this subdivision (v) are met. For purposes of this subparagraph (12), a ''new'' corporation is a corporation (whether or not newly organized) during the period its eligibility depends upon the tacking rule. The five conditions are as follows:

(A) The first condition is that, at any time, 80 percent or more of the new corporation's assets it acquired (other than in the ordinary course of its trade or business) where acquired from the old corporation in one or more transactions described in section 351(a) or 381(a). This asset test is applied by using the fair market values of assets on the date they were acquired and without regard to liabilities. Assets acquired in the ordinary course of business will be excluded from total assets only if they were acquired after the new corporation became a member of the group (determined without section 1504(b)(2)). In addition, assets that the old corporation acquired from outside the group in transactions not conducted in the ordinary course of its trade or business are not included in the 80 percent (but are included in total assets) if the old corporation acquired those assets within five calendar years before the date of their transfer to the new corporation.

(B) The second condition is that at the end of the taxable year during which the first condition is first met, the old corporation and the new corporation must both have the same tax character. For purposes of this paragraph (d)(12), a corporation's tax character is the section under which it would be taxed (*i.e.*, sections 11, 802, 821, or 831) if it filed a separate return. If the old corporation is not in existence (or adopts a plan of complete liquidation) at the end of that taxable year, this subdivision (v)(B) will apply to the old corporation's taxable year immediately preceding the beginning of the taxable year during which the first condition is first met.

(C) The third condition is that, if the old and new corporation are life insurance companies, the transfer (or transfers) is not reasonably expected (at the

time of the transfer) to result in the separation of profitable activities from loss activities.

(D) The fourth condition is that, at the end of the taxable year during which the first condition is first met, the new corporation does not undergo a disproportionate asset acquisition under paragraph (d)(12)(viii) of this section.

(E) The fifth condition is that, if there is more than one old corporation, the first three conditions apply to all of the corporations. Thus, the second condition (tax character) must be met by all of the old corporations transferring assets taken into account in meeting the test in paragraph (d)(12)(v)(A) of this section.

(vi) *Old group remaining in existence.* If the common parent of a group (or a new common parent) became the common parent in a transaction described in §1.1502–75 (d)(2) or (d)(3) where a group remained in existence, then paragraph (d)(12) (ii) through (iv) of this section apply by treating that common parent as if it were also the previous common parent of the group that remains in existence. If this paragraph (d)(12)(vi) applies to a transaction, the tacking rule in paragraph (d)(12)(v) of this section does not apply to the transaction.

(vii) *Change in tax character.* A corporation must not experience during the base period a change in tax character (as defined in paragraph (d)(12)(v)(B) of this section) if the change is attributable to an acquisition of assets from outside the group in transactions not conducted in the ordinary course of its trade or business. However, if a new corporation relies on the tacking rules in paragraph (d)(12)(v) of this section, this paragraph (d)(12)(vii) shall apply during the base period and the current consolidated return year and even if the change in tax character is attributable to an asset acquisition from within the group.

(viii) *Disproportionate asset acquisition.* To be eligible, a corporation must not undergo during the base period disproportionate asset acquisitions which are attributable to an acquisition (or a series of acquisitions) of assets from outside the group in transactions not conducted in the ordinary course of its trade or business (special acquisition). Whether special acquisitions are disproportionate is determined at the end of each base period. Whether an acquisition results in a disproportionate asset acquisition depends on all of the facts and circumstances including the following factors and rules:

(A) One factor is the portion of the insurance reserves (*i.e.*, total reserves in section 801 (c)) of the acquiring company at the end of the base period which is attributable to special acquisitions.

(B) A second factor is the portion of the fair market value of the assets (without reduction for liabilities) of the acquiring company at the end of the base period that is attributable to special acquisitions.

(C) A third factor is the portion of the premiums generated during the last taxable year of the base period which are attributable to special acquisitions.

(D) A corporation will not experience a disproportionate asset acquisition unless 75 percent of one factor (whether or not listed in this subdivision (viii)) is attributable to special acquisitions.

(E) Money or other property contributed to a corporation by a shareholder that is not a member of the group (without section 1504(b)(2)) is not a special acquisition.

(F) If a new corporation relies on the tacking rules in paragraph (d)(12)(v) of this section, this subdivision (viii) applies to that corporation during a consolidated return year. Thus, if at any time during a consolidated return year, a new corporation undergoes a disproportionate asset acquisition, the corporation becomes ineligible at that time.

(13) *Ineligible corporation.* A corporation that is not an eligible corporation is ineligible. If a life company or mutual company is ineligible, it is not treated under section 1504(c)(2) as an includible corporation. Losses of a nonlife member arising in years when it is ineligible may not be used under section 1503(c)(2) and paragraph (m) of this section to set off the income of a life member. If a life or mutual company is ineligible and is the common parent of the group (without section

1504(b)(2)), the election under section 1504(c)(2) may not be made.

(14) *Illustrations.* The following examples illustrate this paragraph (d). In each example, L indicates a life company, another letter indicates a nonlife company, and each corporation uses the calendar year as its taxable year.

Example (1). P has owned all of the stock of S since 1913. On January 1, 1980, P purchased all of the stock of L_1 which owns all of the stock of L_2 and S_2. L_1 and L_2 are treated as members for purposes of determining if they are eligible for 1982. However, for 1982, L_1, L_2, and S_2 are ineligible because none of them has been a member of the group for P's five taxable years preceding 1982. For 1982, L_1 and L_2 may elect to file a consolidated return because they constitute an affiliated group under section 1504(c)(1), and P and S may file a consolidated return.

Example (2). Since 1974, P has been a mutual insurance company owning all the stock of L_1. In 1980, P transfers assets to S_1, a new stock casualty company subject to taxation under section 831(a). For 1982, only P and L_1 are eligible corporations. The tacking rule in paragraph (d)(12)(v) of this section does not apply in 1982 because the old corporation (P) and the new corporation (S_1) do not have the same tax character. The result would be the same if P were a life company.

Example (3). Since 1974, L has owned all the stock of L_1 which has owned all the stock of S_1, a stock casualty company. L_1 writes some accident and health insurance business. In 1980, L_1 transfers this business, and S_1 transfers some of its business, to a new stock casualty company, S_2., in a transaction described in section 351 (a). The property transferred to S_2. by L_1 had a fair market value of $50 million. The property transferred by S_1 had a fair market value of $40 million. S_2. is ineligible for 1982 because the tacking rule in paragraph (d)(12)(v) of this section does not apply. The old corporations (L_1 and S_1) and the new corporation (S_2.) do not all have the same tax character. See subparagraph (d)(12)(v)(B) and (E) of this section. The result would be the same if L_1 transferred other property (*e.g.*, stock and securities) with the same value, rather than accident and health insurance contracts, to S_2.

Example (4). Since 1974, P has owned all the stock of S and L_1. L_1 is a large life company engaged in active business since 1974. On January 1, 1982, L_1 transfers in a section 351 (a) transaction assets (not acquired from outside the group) to a new life company, L_2. For 1982, L_2 is eligible because under paragraph (d)(12)(v) of this section, L_2 is considered to have been in existence and a member of the group engaged in the active business since 1974 which is the period L_1, the old corporation, was in existence and a member of the group so engaged.

Example (5). The facts are the same as in example (4). Assume that the fair market value of the assets L_1 transferred to L_2 was $10 million on January 1, 1982 and that L_2 acquired no other assets prior to June 30, 1983. Assume further that on January 1, 1983, L_1 acquires (other than in the ordinary course of its trade or business) assets having a fair market value of $40 million from L_3, an unrelated life company. On June 30, 1983, L_1 transfers those assets to L_2. L_2 becomes ineligible on June 30, 1983. Since by fair market values, 80 percent (*i.e.*, 40/50) of L_2's assets are attributable to special acquisitions, L_2 has undergone a disproportionate asset acquisition at that time. See paragraph (d)(12)(viii)(B), (D), and (F) of this section.

Example (6). The facts are the same as in example (5) except that L_1 transfers assets (other than life insurance contracts) having a fair market value of $40 million to L_2 and L_2 purchases the assets of L_3 on June 30, 1983. the result of the 1983 acquisition is the same as in example (5).

Example (7). The facts are the same as in example (5) except the acquired assets acquired by L_2 in 1983 from L_1 have a fair market value of $20 million. In 1983, L_2 had $1 million of premiums on its pre-existing contracts but premiums generated by the acquired business for the entire year would have been $2 million. L_2 is eligible in 1983 because it did not experience a disproportionate asset acquisition on June 30, 1983.

Example (8). Since 1974, L, a State A corporation, has owned all of the stock of L_1 and S_1. On January 1, 1982, L merges into L_3, a smaller State B corporation, which owns the stock of S_2. The transaction is a reverse acquisition described in §1.1502–75(d)(3) and the group of which L was the common parent remains in existence. Under paragraph (d)(12)(vi) of this section, L_3 is eligible for 1982. However, S_2 is ineligible in 1982 under paragraph (d)(12)(iv) of this section.

Example (9). The facts are the same as in example (8) except that L acquires the stock of L_3. L_3 and S_2 are both ineligible for 1982. On January 1, 1983, the fair market value of L_3's assets are $5 million (without liabilities) and on that date L transfers assets (not acquired from outside the group) having a fair market value of $95 million (without liabilities) to L_3. L and L_3 are life companies at the end of 1983. L_3 is eligible in 1983 under the tacking rule in paragraph (d)(12)(v) of this section. S_2 is ineligible in that year. The result would be the same if L_3 was not a life company prior to January 1, 1983. See paragraph (d)(12)(v)(B) of this section.

Example (10). Since 1974, P has owned all of the stock of S_1 and L_1. On January 1, 1982, L_1 incorporates L_2 and transfers cash and securities to L_2. L_2 begins writing a new line of specialty life insurance products and it

qualifies as a life company for calendar year 1982. L_2 generates a loss from operations (section 812) attributable to its writing of new business. For 1982, L_2 is ineligible under paragraph (d)(12)(v)(C) of this section.

Example (11). The facts are the same as in example (10) except that L_1 transfers to L_2 a block of insurance contracts that generated losses for L_1 and continued to generate losses for L_2, producing a loss from operations. L_2 is ineligible in 1982 under paragraph (d)(12)(v)(C) of this section.

Example (12). Since 1974, X, a foreign corporation, has owned all the stock of S_2 and S_1, and S_1 has owned all of the stock of L_1. On January 1, 1982, X incorporates a new U.S. company P, and transfers the stock of S_1 and S_2 to P. Assume that under §1.1502–75(d)(3) (relating to reverse acquisitions), the S_1–L_1 affiliated group remains in existence. Under paragraph (d)(12)(vi) of this section, P, S_1, and L_1 are eligible but S_2 is ineligible. The result would be the same if X were an individual.

Example (13). The facts are the same as in example (12) except that X owns all of the stock of S_1, L_1, and S_2. In addition, on January 1, 1982, X transfers the stock of S_1 and S_2 to L_1. L_1 is eligible in 1982 under paragraph (d)(12)(iv) of this section. L_1 would still be eligible even if it owned a subsidiary during the base period but sold the subsidiary prior to January 1, 1982. S_1 and S_2 are ineligible in 1982.

Example (14). Since 1974, S_1 has owned all of the stock of L_1. S_2, an unrelated company, has owned all of the stock of L_2 and S_3 for 10 years. S_1 and S_2 are active stock casualty companies and not holding companies. On January 1, 1982, S_1 and S_2 merge into a new casualty company, S, in a transaction described in §1.1502–75(d)(3) so that the group of which S_1 was the common parent remains in existence. S and L_1 are eligible in 1982 under paragraph (d)(12)(vi) of this section. L_2 and S_3 are ineligible.

Example (15). The facts are the same as in example (14) except that S_2 (the first corporation in §1.1502–75(d)(3)) acquires the stock of S_1 in exchange for the stock of S_2. The result is that only S_2, S_1, and L_1 are eligible in 1982.

Example (16). Since 1974, S had owned all of the stock of L_1. L_1 is a large life company. On January 1, 1982, L_1 incorporates L_2 and transfers $40 million in cash and securities to L_2 in a transaction described in section 351(a). On March 1, 1982, L_2 purchases the assets of L_3, an unrelated life company. The purchased assets have a fair market value (without liabilities) of $30 million on March 1, 1982. L_2 is ineligible for 1982 because the tacking rule in paragraph (d)(12)(v) of this section does not apply. L_2 experienced a disproportionate asset acquisition in 1982. See paragraph (d)(12)((v)(D) of this section.

(e) *Election*—(1) *In general.* The election under section 1504(c)(2) may not be made if the group's common parent is an ineligible life company or an ineligible mutual company. The election under section 1504(c)(2) may only be made by the common parent of the group (as defined in section 1504(c)(2) without the exclusions in section 1504(b)(2)). For example, assume that P owns all of the stock of L_1, an eligible life company, which owns the stock of S_1. Assume further that P also owns the stock of L_2, an ineligible life member, which (for more than five years) has owned the stock of a nonlife company, S_2. Only P may make the election and, if it does so, P, L_1, and S_1 may file a consolidated return under this section. L_2 may not make the election under section 1504(c)(2) and may not file a consolidated return with S_2.

(2) *How election is made*—(i) *General rule.* The election under section 1504(c)(2) is generally made by the group's common parent in the same manner (and it has the same effect) as the election to file a consolidated return is made under §1.1502–75 (a) and (b) for a group which did not file a consolidated return for the immediately preceding taxable year. The procedure for making the election under section 1504(c)(2) is the same whether or not a consolidated return was filed by the life members or the nonlife members for the immediately preceding taxable year.

(ii) *Special rule.* Notwithstanding the general rule, however, if the nonlife members in the group filed a consolidated return for the immediately preceding taxable year and had executed and filed a Form 1122 that is effective for the preceding year, then such members will be treated as if they filed a Form 1122 when they join in the filing of a consolidated return under section 1504(c)(2) and they will be deemed to consent to the regulations under this section. However, an affiliation schedule (Form 851) must be filed by the group and the life members must execute a Form 1122 in the manner prescribed in §1.1502–75(h)(2).

(3) *Irrevocability.* Except as provided in §1.1502–75(c) and paragraph (e)(4) of this section, the election under section 1504(c)(2) is irrevocable.

(4) *Permission to discontinue*—(i) *General rule.* A ''section 1504(c)(2) group'' with a common parent that has made the election to file a consolidated return under section 1504(c)(2) in a previous taxable year is granted permission to elect (under § 1.1502–75(c)(2)(ii)) to discontinue filing such a consolidated return for that group's first taxable year for which the regulations under this section are effective. This election to discontinue shall be exercised in the time and manner prescribed in § 1.1502–75(c)(3), except that the group's common parent shall exercise this election to discontinue (and the other members of the section 1504(c)(2) group must comply with this election) by filing appropriate returns. For purposes of this paragraph (e)(4), an appropriate return is either a separate return or a consolidated return that is filed by newly exercising the privilege under § 1.1502–75(a)(1).

(ii) *Types of groups.* (A) A ''section 1504(c)(2) group'' is an affiliated group which files or filed a consolidated return pursuant to an election under section 1504(c)(2).

(B) A ''limited group'' is an affiliated group (determined without section 1504(c)(2)) having at least one member which was a member of a section 1504(c)(2) group on the date that the section 1504(c)(2) group elected to discontinue under paragraph (e)(4)(i) of this section.

(iii) *Effect on restoration rules.* If a group ceases to file a consolidated return or terminates or if a member leaves the group, certain items of income, gain, or loss on transactions between members are taken into account under §§ 1.1502–13, 1.1502–18, and 1.1502–19 (''restoration rules''). For purposes of applying these restoration rules solely by reason of an election under paragraph (e)(4)(i) or (e)(4)(v)(A) of this section to discontinue filing consolidated returns as a section 1504(c)(2) group, the following rules apply:

(A) The section 1504(c)(2) group shall not be considered to terminate and no member of that group shall be treated as ceasing to be a member.

(B) Members of that section 1504(c)(2) group that are included in the consolidated return of a limited group for the first taxable year for which the discontinuance is effective shall be considered to be filing a consolidated return as a continuation of the section 1504(c)(2) group. However, a corporation that is not a member of a particular limited group for that taxable year is considered to have a separate return year (and, for purposes of § 1.1502–19(c), not to be a member of a group filing a consolidated return) with respect to that limited group's members.

(C) Section 1.1502–13 shall be applied without regard to paragraph (f)(1)(vii).

(iv) *Illustrations.* The following examples illustrate paragraph (e)(4)(i)–(iii) of this section. In these examples, L indicates a life company and another letter indicates a nonlife company. All corporations use the calendar year as the taxable year. For all taxable years involved, P owns all the stock of L_1 and of S, L_1 owns all the stock of L_2, L_2 owns all the stock of L_3, and S owns all the stock of L_4. For 1981, P makes the life-nonlife election of section 1504(c)(2) and L_4 is an eligible corporation. For 1982, P makes the election to discontinue filing consolidated returns under section 1504(c)(2) in accordance with the permission granted in this paragraph (e)(4).

Example (1). L_1, L_2, and L_3 were eligible members. For 1982, P and S may either file separate returns or may file, as a limited group, a consolidated return. Similarly, L_1, L_2, and L_3 may either file separate returns or may file a consolidated return as a limited group under section 1504(c)(1). L_4 must file a separate return.

Example (2). For 1981, L_1 was an ineligible member and L_1, L_2, and L_3 filed a consolidated return under section 1504(c)(1). For 1982, L_1, L_2, and L_3 must continue filing a consolidated return under section 1504(c)(1).

Example (3). For 1981, L_1 was an eligible member and L_2 and L_3 were ineligible members. For 1982, L_1, L_2, and L_3 either must each file a separate return or must file a consolidated return as a limited group under section 1504(c)(1) having L_1 as a common parent.

Example (4). The facts are the same as in example (3). Assume further that for 1981, L_2 and L_3 file a consolidated return. During 1981, intercompany transactions (see § 1.1502–13) occur in the life-nonlife group between P and L_1, between P and S, and between S and L_4 and occur in the ineligible life subgroup between L_2 and L_3. For 1982, the restoration rules of § 1.1502–13, as modified by paragraph (e)(4)(iii)(B) of this section, will be applicable as indicated in the following table:

Intercompany transactions between	§ 1.1502–13
P and L_1	Yes.
P and S, if they file:	
Separate returns	Yes.
A consolidated return	No.
S and L_4	Yes.
L_2 and L_3, if L_1, L_2, and L_3 file:	
Separate returns	Yes.
A consolidated return	No.

(v) *Additional rules.* (A) If a group with a taxable year ending in the month of December, 1982, had made the election under section 1504(c)(2) for a taxable year ending prior to December 1, 1982, and if that group meets the conditions of subdivision (vi) of this paragraph (e)(4), then the common parent may elect to discontinue filing a consolidated return for its taxable year ending in the month of December, 1982 (and other members of the section 1504(c)(2) group must comply with this election) by filing appropriate returns (see paragraph (e)(4)(i) of this section) before September 16, 1983.

(B) If a group made the election under section 1504(c)(2) for its taxable year ending in the month of December, 1982, and if that group meets the conditions of subdivision (vi) of this paragraph (e)(4), then the common parent may elect to withdraw the section 1504(c)(2) election (and all other members of the group determined without section 1504(b)(2) comply with the election) by filing before September 16, 1983, any returns for the appropriate taxable years that would have been filed had the section 1504(c)(2) election never been made.

(vi) A group referred to at subdivision (v)(A) or (B) of this (e)(4) meets the conditions of this subdivision (vi) if it—

(A) filed before March 16, 1983, a return for its taxable year ending in the month of December, 1982, and

(B) had not been granted an extension of time beyond March 15, 1983, for the filing of that return.

(vii) *Interest.* For purposes of section 6601(a), interest runs from the original due date (without extensions) for the filing of such returns as are filed pursuant to an election (to discontinue or withdraw as the case may be) under this paragraph (e)(4).

(5) *Consent to regulations.* If a group does not discontinue filing a consolidated return under paragraph (e)(4) of this section but continues to file a consolidated return for the group's first taxable year for which the regulations under this section are first effective, the members of the group will be deemed to have consented to the regulations under this section.

(6) *Cross reference.* If an election is made under section 1504(c)(2), see § 1.1502–75 (e) and (f) for rules that apply for not including (or including) a member or a nonmember in the consolidated return.

(f) *Effect of election.* If the common parent makes the election under section 1504(c)(2), the following rules apply:

(1) *Termination of group.* A mere election under section 1504(c)(2) will not cause the creation of a new group or the termination of an affiliated group that files a consolidated return in the immediately preceding taxable year.

(2) *Effect of eligibility.* If a life member is eligible after an election under section 1504(c)(2), it may not be included as a member of an affiliated group as defined in section 1504(c)(1).

(3) *Eligible and ineligible life companies.* If any life company was a member of an affiliated group of life companies (as defined in section 1504(c)(1)) but is ineligible for a taxable year for which the election under section 1504(c)(2) is effective, that year is not a separate return year merely by reason of the election under section 1504(c)(2) in applying §§ 1.1502–13, 1.1502–18, and 1.1502–19 to transactions occurring in prior consolidated return years of that affiliated group. In addition, if more than one ineligible life member of the group (as defined in section 1504(c)(1)) joined in the filing of a consolidated return in the taxable year immediately preceding the year for which the election under section 1504(c)(2) is effective and, solely as a result of the election, one of the ineligible life members becomes the common parent of such a group (section 1504(c)(1)), the group must continue to file a consolidated return. For example, assume that L_1 owns all of the stock of S_1 and all of the stock of L_2. L_2 owns the stock of L_3. L_1, L_2, and L_3 are life companies and S_1 is a nonlife company. Assume further that

in 1981, L_1, L_2, and L_3 file a consolidated return but L_1 makes the election under section 1504(c)(2) for 1982 and L_2 and L_3 are ineligible. L_2 and L_3 must continue to file a consolidated return in 1982. Moreover, L_2 could elect in 1982 to file a consolidated return (section 1504(c)(1)) with L_3 even if they did not file a consolidated return in 1981 with L_1.

(4) *Inclusion of life company.* If a life company is ineligible in the consolidated return year for which the election is effective, it will be treated as an includible corporation for the common parent's first taxable year in which the company becomes eligible.

(5) *Dividends received deduction.* Section 243(b)(5) defines the term affiliated group for purposes of the election to deduct 100 percent of the qualifying dividends received by a member from another member of the group. Section 246(b)(6) limits certain multiple tax benefits and the deduction itself. Section 243(b) (5) and (6) do not apply to the mutual companies and life companies that are eligible corporations. See section 1504(c)(2)(B)(i). Thus, the common parent of the group may elect to deduct 100 percent of the qualifying dividends received from an ineligible life company.

(6) *Controlled group.* Sections 1563 (a)(4), (b)(2)(D), and (b)(3)(C) (insofar as it applies to corporations described in section 1563(b)(2)(D)) do not apply to any eligible or ineligible life company that is a member of the group for a taxable year during which the election is effective. See paragraph (d)(4) of this section for the definition of group.

(7) *Consolidated tax.* The tax liability of a group for a consolidated return year (before application of credits against that tax) is computed on a consolidated basis by adding together the following taxes:

(i) The tax imposed under section 11 on consolidated taxable income (as determined under paragraph (g) of this section). The taxes imposed under sections 802(a), 821(a), and 831(a) will each be treated as a tax imposed under section 11.

(ii) The tax imposed by section 1201 on consolidated net capital gain (as determined under paragraph (o) of this section) in lieu of the tax imposed under paragraph (f)(7)(i) of this section on that gain.

(iii) Any taxes described in §1.1502–2 (other than by paragraphs (a), (f), and (h) thereof).

(g) *Consolidated taxable income.* The consolidated taxable income is the sum of the following three amounts:

(1) *Nonlife consolidated taxable income.* The nonlife consolidated taxable income (as defined in paragraph (h) of this section) of the nonlife subgroup, as set off by the life subgroup losses as provided in paragraph (n) of this section. The amount in this paragraph (g)(1) may not be less than zero.

(2) *Consolidated partial LICTI.* The consolidated partial LICTI (as defined in paragraph (j) of this section) of the life subgroup, as set off by the nonlife subgroup losses as provided in paragraph (m) of this section. The amount in this paragraph (g)(2) may not be less than zero.

(3) *Surplus accounts.* The sum of the amounts subtracted under section 815 from the policyholders' surplus accounts of the life members.

(h) *Nonlife consolidated taxable income*—(1) *In general.* Nonlife consolidated taxable income is the consolidated taxable income of the nonlife subgroup, computed under §1.1502–11 as modified by this paragraph (h). For this purpose, separate taxable income of a member includes separate mutual insurance company taxable income (as defined in section 821(b)) and insurance company taxable income (as defined in section 832).

(2) *Nonlife consolidated net operating loss deduction*—(i) *In general.* In applying §§1.1502–21 or 1.1502-21A (as appropriate), the rules in this subparagraph (2) apply in determining for the nonlife subgroup the nonlife net operating loss and the portion of the nonlife net operating loss carryovers and carrybacks to the taxable year.

(ii) *Nonlife CNOL.* The nonlife consolidated net operating loss is determined under §§1.1502–21(A)(f) or 1.1502-21(e) (as appropriate) by treating the nonlife subgroup as the group.

(iii) *Carryback.* The nonlife consolidated net operating loss for the nonlife subgroup is carried back under §§1.1502–21A or 1.1502-21 (as appropriate) to the appropriate years

(whether consolidated or separate) before the loss may be used as a nonlife subgroup loss under paragraphs (g)(2) and (m) of this section to set off consolidated partial LICTI in the year the loss arose. The election under section 172(b)(3)(C) to relinquish the entire carryback period for the net operating loss of the nonlife subgroup may be made by the common parent of the group. Furthermore, the election may be made even though the election under section 812(b)(3) and paragraph (l)(3)(iii) of this section is not made.

(iv) *Subgroup rule.* In determining the portion of the nonlife consolidated net operating loss that is absorbed when the loss is carried back to a consolidated return year beginning after December 31, 1981, §§1.1502–21A or 1.1502-21 (as appropriate) is applied by treating the nonlife subgroup as the group. Therefore, the absorption is determined without taking into account any life subgroup losses that were previously reported on a consolidated return as setting off nonlife consolidated taxable income for the year to which the nonlife loss is carried back.

(v) *Carryover.* The portion of the nonlife consolidated net operating loss that is not absorbed in a prior year as a carryback, or as a nonlife subgroup loss that set off consolidated partial LICTI for the year the loss arose, constitutes a nonlife carryover under this subparagraph (2) to reduce nonlife consolidated taxable income before that portion may constitute a nonlife subgroup loss that sets off consolidated partial LICTI for a particular year.

(vi) *Transitional rules.* The nonlife consolidated net operating loss deduction is subject to a transitional rule limitation in paragraph (h)(3) of this section.

(vii) *Example.* The following example illustrates this paragraph (h)(2). In the example, L indicates a life company, another letter indicates a nonlife company, and each corporation uses the calendar year as its taxable year.

Example. P owns all of the stock of S and L_1. L_1 owns all of the stock of L_2. For 1982, the group first files a consolidated return for which the election under section 1504(c)(2) is effective. P and S filed consolidated returns for 1979 through 1981. In 1982, the P-S group sustains a nonlife consolidated net operating loss. The loss is carried back to the consolidated return years 1979, 1980, and 1981 of P and S by using the principles of §§1.1502–21A and 1.1502–79A and, because the election in 1982 under section 1504(c)(2) does not result under paragraph (f)(1) of this section in the creation of a new group or the termination of the P-S nonlife group, the loss is absorbed on the consolidated return in those years without regard to whether the loss in 1982 is attributable to P or S and without regard to their contribution to consolidated taxable income in 1979, 1980, or 1981. The portion of the loss not absorbed in 1979, 1980, and 1981 may serve as a nonlife subgroup loss in 1982 that may set off the consolidated partial LICTI of L_1 and L_2 under paragraphs (g)(2) and (m) of this section.

(3) *Transitional rule*—(i) *In general.* The portion of the nonlife consolidated net operating loss deduction in a consolidated return year beginning after December 31, 1980 (referred to as ''post-1980 year'') attributable to net operating losses sustained in separate return years ending before January 1, 1981 (referred to as ''pre-1981 year''), is subject to the rules and limitations in this subparagraph (3).

(ii) *Separate nonlife groups.* To determine the limitation, first, identify for the post-1980 year one or more separate affiliated groups of nonlife companies (as defined in section 1504 without section 1504(c)(2)). For this purpose, a single nonlife company may constitute a separate affiliated group if (A) it is not otherwise a member of a separate group or (B) it has a net operating loss sustained in the pre-1981 year that may be carried over and that year is a separate return limitation year (determined under §1.1502–1(f) without paragraph (d)(11) of this section).

(iii) *Carryover.* Second, identify the pre-1981 year net operating losses that may be carried over and that are attributable to each separate affiliated group of nonlife companies. The separate return limitation year rules in §§1.1502–21A(c) or 1.1502-21(c) (as appropriate) do not apply to any of these carryovers.

(iv) *Limitation.* Third, treat the last taxable year ending before January 1, 1981, as if in that year there was a consolidated return change of ownership of each such separate affiliated group of nonlife companies and apply the consolidated return change of ownership limitation in §1.1502–21A(d) to the losses of each group by treating the

members of each separate group as old members.

(v) *Examples.* The following examples illustrate this paragraph (h)(3). In the examples L indicates a life company, another letter indicates a nonlife company, and each corporation uses the calendar year as its taxable year.

Example (1). Throughout all of 1982, P owns all of the stock of S and L_1 and L_1 owns all of the stock of L_2 which in turn owns all of the stock of S_1. Thus, for 1982, there are two nonlife subgroups under this subparagraph (3), P-S and S_1. For 1981, P and S did not file a consolidated return and for 1980 P has a net operating loss of $200,000. Assume that P had no income in 1981. For 1982, the group makes an election under section 1504(c)(2) to file a consolidated return and all corporations are eligible corporations. The consolidated taxable income for the nonlife subgroup for 1982 (determined without the consolidated net operating loss deduction) recomputed by including only items of income and deduction of P and S is $120,000. If $120,000 is the §1.1502–21(d)(2) amount for P and S, then the amount of P's net operating loss for 1980 that may be carried over to P and S for 1982 cannot exceed $120,000.

Example (2). (a) P owns all of the stock of S_1. On January 1, 1979, P purchased all of the stock of L_1 which owns all of the stock of L_2 and S_2. Prior to 1984, all of the corporations filed separate returns. For 1984, the group makes an election under section 1504(c)(2) to file a consolidated return.

(b) 1981, 1982, and 1983 are not treated under paragraph (d)(11) of this section as separate return limitation years of the P, S_1, and S_2 nonlife subgroup. However, P and S_1 will be treated as old members under paragraph (h)(3)(iv) of this section and under §1.1502–21A(d) with respect to their losses in 1979 and 1980 (whether a consolidated return was filed or separate returns were filed) so that the portion of nonlife consolidated taxable income attributable to S_2 may not absorb the losses of P or S_1. The rules that apply to the P-S_1 nonlife subgroup for 1979 and 1980 apply in an identical way to S_2 by treating S_2 as a subgroup separate from the P-S_1 nonlife subgroup. See section 1507(c)(2)(A) of the Tax Reform Act of 1976.

(c) Similarly, L_1 and L_2 are treated as old members under paragraphs (l)(3) and (h)(3)(iv) of this section for losses arising in 1979 and 1980. However, since the L_1—L_2 subgroup is also the life subgroup under paragraph (d)(8) of this section, the limitation in paragraph (h)(3)(iv) of this section does not affect the computation of consolidated partial LICTI for the life subgroup.

(4) *Nonlife consolidated capital gain net income or loss*—(i) *In general.* In applying §§1.1502–22 or 1.1502-22A (as appropriate),the rules in this subparagraph (4) apply in determining for the nonlife subgroup the nonlife consolidated capital gain net income or loss and the portion of the nonlife net capital loss carryovers and carrybacks to the taxable year. In particular, the nonlife consolidated capital gain net income and nonlife consolidated net capital loss are determined under the principles of §§1.1502–22 or 1.1502-22A(a) (as appropriate) by treating the nonlife subgroup as the group.

(ii) *Additional principles.* In applying §§1.1502–22A or 1.1502-22 to nonlife consolidated net capital loss carryovers and carrybacks, the principles set forth in paragraphs (h)(2) (iii) through (v) for applying §§1.1502–21 or 1.1502-21A (as appropriate) to nonlife consolidated net operating loss carryovers and carrybacks shall also apply. Further, the portion of nonlife consolidated net capital loss carryovers attributable to losses sustained in taxable years ending before January 1, 1981, is subject to the limitations in paragraph (h)(3) of this section applied by substituting ''net capital loss'' for the term ''net operating loss'' and ''§1.1502–22A(d)'' for ''§1.1502–21A(d)''.

(iii) *Special rules.* The nonlife consolidated net capital loss is reduced, for purposes of determining the carryovers and carrybacks under §§1.1502–22A(b)(1) or 1.1502-22(b) by the lesser of:

(A) The aggregate of the additional capital loss deductions allowed under section 822(c)(6) or section 832(c)(5), or

(B) The nonlife consolidated taxable income computed without capital gains and losses.

(i) [Reserved]

(j) *Consolidated partial LICTI.* [Reserved]

(k) *Consolidated TII*—(1) *General rule.* [Reserved]

(2) *Separate TII.* [Reserved]

(3) *Company's share of investment yield.* [Reserved]

(4) *Life consolidated capital gain net income.* [Reserved]

(5) *Life consolidated net capital loss carryovers and carrybacks.* The life consolidated net capital loss carryovers and carrybacks for the life subgroup are determined by applying the principles of §§1.1502–22 or 1.1502–22A (as

appropriate) as modified by the following rules in this subparagraph (5):

(i) Life consolidated net capital loss is first carried back (or apportioned to the life members for separate return years) to be absorbed by life consolidated capital gain net income without regard to any nonlife subgroup capital losses and before the life consolidated net capital loss may serve as a life subgroup capital loss that sets off nonlife consolidated capital gain net income in the year the life consolidated net capital loss arose.

(ii) If a life consolidated net capital loss is not carried back or is not a life subgroup loss that sets off nonlife consolidated capital gain net income in the year the life consolidated net capital loss arose, then it is carried over to the particular year under this paragraph (k)(5) first against life consolidated capital gain net income before it may serve as a life subgroup capital loss that sets off nonlife consolidated capital gain net income in that particular year.

(iii) *Section 818(f).* Capital losses may not be deducted more than once and capital gain will not be included more than once. See section 818(e) and also section 818(f).

(iv) Capital loss carryovers are subject to the transitional rule in paragraph (k)(6) of this section.

(6) *Transitional rule.* The portion of the life consolidated capital loss carryovers attributable to the net capital losses of the life members sustained in separate return years ending before January 1, 1981, is subject to the same limitations as the capital losses of nonlife members in paragraph (h)(4)(iii) of this section by applying the principles of paragraph (h)(3) of this section to each separate affiliated group of life companies.

(l) *Consolidated GO or LO*—(1) *General rule.* [Reserved]

(2) *Separate GO.* [Reserved]

(3) *Consolidated operations loss deduction*—(i) *General rule.* The consolidated operations loss deduction is an amount equal to the consolidated operations loss carryovers and carrybacks to the taxable year. The provisions of §§1.1502–21 or 1.1502–21A (as appropriate) and section 812 apply to the extent not inconsistent with this paragraph (l)(3).

(ii) *Consolidated offset.* For purposes of applying section 812 (b) and (d), the term ''consolidated offset'' means the increase in the consolidated operations loss deduction which reduces consolidated partial LICTI to zero. For setoff of consolidated LO against nonlife consolidated taxable income, see paragraph (n)(2) of this section.

(iii) *Carrybacks.* A consolidated LO is first carried back to be absorbed by GO of a life member under section 809(d)(4) or consolidated partial LICTI (as the case may be under section 818(f)(2)) for prior consolidated return years (or apportioned to the life members for prior separate return years) without regard to any nonlife subgroup losses that were set off against consolidated partial LICTI and before the consolidated LO may serve as a life subgroup loss to be set off against nonlife consolidated taxable income in the year the consolidated LO arose. The election to relinquish the entire carryback period for the consolidated LO of the life subgroup may be made by the common parent of the group. See section 812(b)(3). Furthermore, the election may be made even though the election under section 172(b)(3)(C) and paragraph (h)(2)(iii) of this section is not made.

(iv) *Carryovers.* If a consolidated LO is not carried back or is not applied as a life subgroup loss that set off nonlife consolidated taxable income in the year the consolidated LO arose, then it is carried over to a particular year under this paragraph (l)(3) first against the GO of a life member under section 809(d)(4) or consolidated partial LICTI (as the case may be under section 818(f)(2)) before it may serve as a life subgroup loss that may be set off against nonlife consolidated taxable income for that particular year.

(v) *Transitional rule.* The portion of a consolidated operations loss deduction that is attributable to LOs sustained in separate return years ending before January 1, 1981, is subject to the same rules and limitations that the nonlife consolidated net operating loss deduction is subject to in paragraph (h)(3) of this section as applied by identifying

separate affiliated groups of life companies.

(4) *Life consolidated capital gain net income or loss.* Life consolidated capital gain net income or loss is determined in the same manner as under paragraph (k)(4) of this section. However, a life member's company share is determined under section 809 (a) and (b)(3).

(m) *Consolidated partial LICTI setoff by nonlife subgroup losses*—(1) *In general.* The nonlife subgroup losses consist of the nonlife consolidated net operating loss and the nonlife consolidated net capital loss. Under paragraph (g)(2) of this section, consolidated partial LICTI is set off by the amounts of these two consolidated losses specified in paragraph (m)(2) of this section. The setoff is subject to the rules and limitations in paragraph (m)(3) of this section.

(2) *Amount of setoff*—(i) *Current year.* Consolidated partial LICTI for the current taxable year is set off by the portion of the nonlife consolidated net operating loss and nonlife consolidated net capital loss arising in that year that cannot be carried back under paragraph (h) of this section to prior taxable years (whether consolidated or separate return years) of the nonlife subgroup.

(ii) *Carryovers.* The portion of the offsettable nonlife consolidated net operating loss or nonlife consolidated net capital loss that has not been used as a nonlife subgroup loss setoff against consolidated partial LICTI in the year it arose may be carried over to succeeding taxable years under the principles of §§1.1502–21 or 1.1502–21A (as appropriate) (relating to net operating loss deduction) or §§1.1502–22 or 1.1502–22A (as appropriate) (relating to net capital loss carryovers). However, in any particular succeeding year, the losses will be used under paragraph (h) of this section in computing nonlife consolidated taxable income before being used in that year as a nonlife subgroup loss that sets off consolidated partial LICTI.

(3) *Nonlife subgroup loss rules and limitations.* The nonlife subgroup losses are subject to the following operating rules and limitations:

(i) *Separate return years.* The carryovers in paragraph (m)(2)(ii) of this section may include net operating losses and net capital losses of the nonlife members arising in separate return years ending after December 31, 1980, that may be carried over to a succeeding year under the principles (including limitations) of §§1.1502–21 and 1.1502–22 (or §§1.1502–21A and 1.1502–22A, as appropriate). But see subdivision (ix) of this paragraph (m)(3).

(ii) *Capital loss.* Nonlife consolidated net capital loss sets off consolidated partial LICTI only to the extent of life consolidated capital gain net income (as determined under paragraph (l)(4) of this section) and this setoff applies before any nonlife consolidated net operating loss sets off consolidated partial LICTI.

(iii) *Capital gain.* Life consolidated capital gain net income is zero in any taxable year in which the life subgroup has a consolidated LO and, in any taxable year, it may not exceed consolidated partial LICTI.

(iv) *Ordering rule.* Consolidated partial LICTI for a consolidated return year is set off by nonlife subgroup losses for that year before being set off (under paragraph (m)(2)(ii) of this section) by a carryover of a nonlife subgroup loss to that year.

(v) *Setoff at bottom line.* The setoff of nonlife subgroup losses against consolidated partial LICTI does not affect life member deductions that depend in whole or in part on GO or TII. Thus, the setoff does not affect the amount of consolidated partial LICTI (as determined under paragraph (j) of this section) for any taxable year but it merely constitutes an adjustment in arriving at the group's consolidated taxable income under paragraph (g) of this section.

(vi) *Ineligible nonlife member.* (A) The offsetable nonlife consolidated net operating loss that arises in any consolidated return year (that may be set off against consolidated partial LICTI in the current taxable year or in a succeeding taxable year) is the amount computed under paragraph (h)(2)(ii) of this section reduced by the ineligible NOL. For purposes of this subparagraph (3), the ''ineligible NOL'' is in the year the loss arose the amount of the separate net operating loss (determined under §§1.1502–21(b) of any nonlife member that is ineligible in

that year (and not the portion of the nonlife consolidated net operating loss attributable under §§1.1502–21(b) to such a member). (B) The carryovers of offsetable nonlife net operating losses under paragraph (m)(2)(ii) of this section do not include an ineligible NOL arising in a consolidated return year or a loss attributable to an ineligible member arising in a separate return year. See section 1503(c)(2). (C) For absorption within the nonlife subgroup of an ineligible NOL arising in a consolidated return year or a loss of an ineligible member arising in a separate return year which is not a separate return limitation year under paragraph (m)(3)(ix) of this section, see paragraph (m)(3)(vii) of this section.

(vii) *Absorption of ineligible NOL.* (A) If all or a portion of a nonlife member's ineligible NOL (determined under paragraph (m)(3)(vi)(A) of this section) may be carried back or carried over under paragraph (h)(2) of this section to a particular consolidated return year of the nonlife subgroup (absorption year), then notwithstanding §1.1502–21A(b)(3)(ii) or 1.1502–21(b), the amount carried to the absorption year will be absorbed by that member's contribution (to the extent thereof) to nonlife consolidated taxable income for that year.

(B) For purposes of (A) of this subdivision (vii), a member's contribution to nonlife consolidated taxable income for an absorption year is the amount of such income (computed without the portion of the nonlife consolidated net operating loss deduction attributable to taxable years subsequent to the year the loss arose), minus such consolidated taxable income recomputed by excluding both that member's items of income and deductions for the absorption year. The deductions of the member include the prior application of this paragraph (m)(3)(vii) to the absorption of the nonlife consolidated net operating loss deduction for losses arising in taxable years prior to the particular loss year.

(viii) *Election to relinquish carryback.* The offsetable nonlife consolidated net operating loss does not include the amount that could be carried back under paragraph (h) (2) of this section but for the common parent's election under section 172(b)(3)(C) to relinquish the carryback. See section 1503(c)(1).

(ix) *Separate return limitation year.* The offsetable nonlife consolidated net operating and capital loss carryovers do not include any losses attributable to a nonlife member that were sustained (A) in a separate return limitation year (determined without section 1504(b)(2)) of that member (or a predecessor), or (B) in a separate return year ending after December 31, 1980, in which an election was in effect under neither section 1504(c)(2) nor section 243(b)(2). For purposes of this paragraph (m), a separate return limitation year includes a taxable year ending before January 1, 1981. See section 1507(c)(2)(A) of the Tax Reform Act of 1976 and §§1.1502–15 and 1.1502–15A (including applicable exceptions thereto).

(x) *Percentage limitation.* The offsetable nonlife consolidated net operating losses that may be set off against consolidated partial LICTI in a particular year may not exceed a percentage limitation. This limitation is the applicable percentage in section 1503(c)(1) of the lesser of two amounts. The first amount is the sum of the offsetable nonlife consolidated net operating losses under paragraph (m)(2) of this section that may serve in the particular year (determined without this limitation) as a setoff against consolidated partial LICTI. The second amount is consolidated partial LICTI (as defined in paragraph (j) of this section) in the particular year reduced by any nonlife consolidated net capital loss that sets off consolidated partial LICTI in that year.

(xi) *Further limitation.* Any offsetable nonlife consolidated net operating loss remaining after applying the percentage limitation that is carried over to a succeeding taxable year may not be set off against the consolidated partial LICTI attributable to a life member that was not an eligible life member in the year the loss arose. See section 1503(c)(2).

(xii) *Restoration rule.* The carryback of a consolidated LO or life consolidated net capital loss under paragraph (l) of this section that reduces consolidated partial LICTI (or life consolidated capital gain net income) for a prior year may reduce the amount of

nonlife subgroup losses that would offset consolidated partial LICTI in that prior year. Thus, that amount may be carried over under paragraph (h) (2) or (4) of this section from that prior year in determining nonlife consolidated taxable income in a succeeding year or serve as offsetable nonlife subgroup losses in a succeeding year.

(4) *Acquired groups.* [Reserved]

(5) *Illustrations.* The following examples illustrates this paragraph (m). In the examples, L indicates a life company, another letter indicates a nonlife company, and each corporation uses the calendar year as its taxable year.

Example (1). P owns all of the stock of L and S. S owns all of the stock of I, a nonlife member that is an ineligible corporation for 1982 under paragraph (d)(13) of this section. For 1982, the group elects under section 1504(c)(2) to file a consolidated return. For 1982, assume that any nonlife consolidated net operating loss may not be carried back to a prior taxable year. Other facts are summarized in the following table.

	Separate taxable income (loss)
P	$100
S	(100)
I	(100)
Nonlife consolidated net operating loss	(100)

Under paragraph (m)(3)(vi) of this section, P's separate income is considered to absorb the loss of S, an eligible member, first and the offsetable nonlife consolidated net operating loss is zero, *i.e.,* the consolidated net operating loss ($100) reduced by I's loss ($100). The consolidated net operating loss ($100) may be carried over, but since it is entirely attributable to I (an ineligible member) its use is subject to the restrictions in paragraph (m)(3)(vi) of this section. The result would be the same if the group contained two additional members, S_1, an eligible member, and I_1, an ineligible member, where S_1 had a loss of ($100) and I_1 had income of $100.

Example (2). The facts are the same as in example (1) except that for 1982 S's separate net operating loss is $200. Assume further that L's consolidated partial LICTI is $200. Under paragraph (m)(3)(vi) of this section, the offsetable nonlife consolidated net operating loss is $100, *i.e.,* the nonlife consolidated net operating loss computed under paragraph (h)(2)(ii) of this section ($200), reduced by the separate net operating loss of I ($100). The offsetable nonlife consolidated net operating loss that may be set off against consolidated partial LICTI in 1982 is $30, *i.e.,* 30 percent of the lesser of the offsetable $100 or consolidated partial LICTI of $200. See paragraph (m)(3)(x) of this section. The nonlife subgroup may carry $170 to 1983 under paragraph (h)(2) of this section against nonlife consolidated taxable income, *i.e.,* consolidated net operating loss ($200) less amount used in 1982 ($30). Under paragraph (m)(2)(ii) of this section, the offsetable nonlife consolidated net operating loss that may be carried to 1983 is $70, *i.e.,* $100 minus $30. The facts and results are summarized in the table below.

	(Dollars omitted)			
	Facts	Offsetable	Limit	Unused loss
	(a)	(b)	(c)	(d)
1. P	100			
2. S.	(200)	(100)		(70)
3. I	(100)			(100)
4. Nonlife subgroup	(200)	(100)	(100)	(170)
5. L	200		200	
6. 30% of lower of line 4(c) or 5(c)			30	
7. Unused offsetable loss				(70)

Accordingly, under paragrah (g) of this section (assuming no amount is withdrawn from L's surplus accounts), consolidated taxable income is $170, *i.e.,* line 5 (a) minus line 6(c)).

Example (3). The facts are the same as in example (2) with the following additions for 1983. The nonlife subgroup has nonlife consolidated taxable income of $50 (all of which is attributable to I) before the nonlife consolidated net operating loss deduction under paragraph (h)(2) of this section. Consolidated partial LICTI is $100. Under paragraph (h)(2) of this section, $50 of the nonlife consolidated net operating loss carryover ($170) is used in 1983 and, under paragraph (m)(3) (vi) and (vii) of this section, the portion used in 1982 is attributable to I, the ineligible nonlife member. Accordingly, the offsetable nonlife consolidated net operating loss from 1982 under paragraph (m)(3)(ii) of this section is $70, *i.e.,* the unused loss from 1982. The offsetable nonlife consolidated net operating loss in 1983 is $24.50, *i.e.,* 35 percent of the

lesser of the offsetable loss of $70 or consolidated partial LICTI of $100. Accordingly, under paragraph (g) of this section (assuming no amount is withdrawn from L's surplus accounts), consolidated taxable income is $75.50, *i.e.*, consolidated partial LICTI of $100 minus the offsetable loss of $24.50.

Example (4). P owns all of the stock of S and L. For 1982, all corporations are eligible corporations, and the group elects under section 1504(c)(2) to file a consolidated return, the nonlife consolidated net operating loss is $100, and the nonlife consolidated net capital loss is $50. Assume that the losses may not be carried back and the capital losses are not attributable to built-in deductions under paragraph (m)(3)(ix) of this section or under § 1.1502–15A. Other facts and the results are set forth in the following table:

	P-S	L
1. Nonlife consolidated net operating loss	($100)	.....
2. Nonlife consolidated capital loss	(50)	.....
3. Consolidated partial LICTI	.....	$100
4. Life consolidated capital gain net income included in line 3	.....	50
5. Offsetable:		
(a) 30% of lower of line (1) or line (3)–(4)	(15)	.....
(b) Line 2	(50)	.....
(c) Total	(65)	.....
6. Unused losses available to be carried over:		
(a) From line 1 (line 1 minus line 5 (a))	(85)	.....
(b) From line 2 (line 2 minus line 5 (b))	0	.....

Accordingly, under paragraph (g) of this section consolidated taxable income is $35, *i.e.*, line 3 minus line 5(c).

Example (5). The facts are the same as in example (4). Assume further that for 1983 L has an LO that is carried back to 1982 and the LO is large enough to reduce consolidated partial LICTI for 1982 to zero as determined before any setoff for nonlife losses. Under paragraph (m)(3)(xii) of this section, the nonlife consolidated net operating loss of $15 and the nonlife consolidated net capital loss of $50 that were set off in 1982 respectively against consolidated partial LICTI and life consolidated capital gain net income are restored. These restored amounts may consititute part of the nonlife consolidated net operating loss carryover to 1983 under paragraph (h)(2) of this section or part of the nonlife net capital loss carryover to 1983 under paragraph (h)(4) of this section.

Example (6). The facts are the same as in example (5) except that L's LO for 1983 as carried back reduces consolidated partial LICTI in 1982 from $100 to $25. Since consolidated partial LICTI of $100 in 1982 (before the carryback) included life consolidated capital gain net income of $50, under paragraph (m)(3)(iii) of this section, the life consolidated capital gain net income is $25, *i.e.*, $50 but not more than $25. Therefore, under paragraph (m)(3)(ii) of this section, the offsetable nonlife capital loss in 1982 is $25 and, under paragraph (m) (3)(xii) of this section, $25 of the $50 nonlife consolidated net capital loss in 1982 may be carried under paragraph (h)(4) of this section to 1983. No nonlife consolidated net operating loss is used as a setoff against consolidated partial LICTI in 1982 under paragraph (m)(3)(xii) of this section by reason of the carryback of the consolidated LO from 1983 to 1982.

(n) *Nonlife consolidated taxable income set off by life subgroup losses*—(1) In *general.* The life subgroup losses consist of the consolidated LO and the life consolidated net capital loss (as determined under paragraph (l)(4) of this section). Under paragraph (g)(1) of this section, nonlife consolidated taxable income is set off by the amounts of these two consolidated losses specified in paragraph (n)(2) of this section.

(2) *Amount of setoff.* The portion of the consolidated LO or life consolidated net capital loss that may be set off against nonlife consolidated taxable income (determined under paragraph (h) of this section) is determined by applying the rules prescribed in paragraphs (m) (2) and (3) of this section in the following manner:

(i) Substitute the term ''life'' for ''nonlife'', and vice versa.

(ii) Substitute the term ''nonlife consolidated taxable income'' for ''consolidated partial LICTI'', and vice versa.

(iii) Substitute the term ''consolidated LO'' for ''non-life consolidated net operating loss'', ''paragraph (l)'' or ''paragraph (j)'' for ''paragraph (h)'', and ''section 812(b)(3)'' for ''section 172(b)(3)(C)''.

(iv) Paragraphs (m)(3)(vi), (vii), (x), and (xi) of this section do not apply to a consolidated LO.

(v) Capital losses may not be deducted more than once. See section 818(e) and also the requirements in section 818(f).

(vi) The setoff of life subgroup losses against nonlife consolidated taxable income does not affect nonlife member deductions that depend in whole or in part on taxable income.

(3) *Illustrations.* The following examples illustrate this paragraph (n). In the examples, L indicates a life company, another letter indicates a nonlife company, and each corporation uses the calendar year as its taxable year.

Example (1). P, S, L_1 and L_2 constitute a group that elects under section 1504(c)(2) to file a consolidated return for 1982. In 1982, the nonlife subgroup consolidated taxable income is $100 and there is $20 of nonlife consolidated net capital loss that cannot be carried back under paragraph (h) of this section to taxable years (whether consolidated or separate) preceding 1982. The nonlife subgroup has no carryover from years prior to 1982. Consolidated LO is $150 which under paragraph (l) of this section includes life consolidated capital gain net income of $25. The $150 LO is carried back under paragraph (l)(3) of this section to taxable years (whether consolidated or separate) preceding 1982 before it may offset in 1982 nonlife consolidated taxable income. Since life consolidated capital gain net income is zero for 1982, the nonlife capital loss offset is zero.

Example (2). The facts are the same as in example (1). Assume further that no part of the $150 consolidated LO for 1982 can be used by L_1 and L_2 in years prior to 1982. For 1982, $100 of consolidated LO sets off the $100 nonlife consolidated taxable income. The life subgroup carries under paragraph (l)(3) of this section to 1983 $50 of the consolidated LO ($150 minus $100). See paragraph (l)(3)(ii) of this section. The $50 carryover will be used in 1983 against life subgroup income before it may be used in 1983 to setoff nonlife consolidated taxable income.

Example (3). (a) The facts are the same as in example (1), except that for 1982 the nonlife consolidated taxable income is $150 and includes nonlife consolidated capital gain net income of $50, consolidated partial LICTI is $200, and a life consolidated net capital loss is $50. Assume that the $50 life consolidated net capital loss sets off the $50 nonlife consolidated capital gain net income. Consolidated taxable income under paragraph (g) of this section is $300, *i.e.,* nonlife consolidated taxable income ($150) minus the setoff of the life consolidated net capital loss ($50), plus consolidated partial LICTI ($200).

(b) Assume that for 1983 the nonlife consolidated net operating loss is $150. Under paragraph (h)(2) of this section, the loss may be carried back to 1982 against nonlife consolidated taxable income. If P, the common parent, does not elect to relinquish the carryback under section 172(b)(3)(C), the entire $150 must be carried back reducing 1982 nonlife consolidated taxable income to zero and nonlife consolidated capital gain net income to zero. Under paragraph (m)(3)(xii) of this section, the setoff in 1982 of the nonlife consolidated capital gain net income ($50) by the life consolidated net capital loss ($50) is restored. Accordingly, the 1982 life consolidated net capital loss may be carried over by the life subgroup to 1983. Under paragraph (g) of this section, after the carryback consolidated taxable income for 1982 is $200, *i.e.,* nonlife consolidated taxable income ($0) plus consolidated partial LICTI ($200).

Example (4). The facts are the same as in example (3), except that P elects under section 172 (b)(3)(C) to relinquish the carryback of $150 arising in 1983. The setoff in part (a) of example (3) is not restored. However, the offsetable nonlife consolidated net operating loss for 1983 (or that may be carried forward from 1983) is zero. See paragraph (m)(3)(viii) of this section. Nevertheless, the $150 nonlife consolidated net operating loss may be carried forward to be used by the nonlife group.

Example (5). P owns all of the stock of S_1 and of L_1. On January 1, 1978, L_1 purchases all of the stock of L_2. For 1982, the group elects under section 1504(c)(2) to file a consolidated return. For 1982, L_1 is an eligible corporation under paragraph (d)(12) of this section but L_2 is ineligible. Thus, L_1 but not L_2 is a member for 1982. For 1982, L_2 sustains an LO that cannot be carried back. For 1982, L_2 is treated under paragraph (f)(6) of this section as a member of a controlled group of corporations under section 1563 with P, S, and L_1. For 1983, L_2 is eligible and is included on the group's consolidated return. L_2's LO for 1982 that may be carried to 1983 is not treated under paragraph (d)(11) of this section as having been sustained in a separate return limitation year for purposes of computing consolidated partial LICTI of the L_1–L_2 life subgroup for 1983. Furthermore, the portion of L_2's LO not used under paragraph (l)(3) of this section against life subgroup income in 1983 may be included in offsetable consolidated operations loss under paragraph (n)(2) and (m)(3)(i) of this section that reduces in 1983 nonlife consolidated taxable income because L_2's loss in 1982 was not sustained in a separate return limitation year under paragraph (n)(2) and (m)(3)(ix)(A) of this section or in a separate return year (1982) when an election was in effect neither under section 1504(c)(2) nor section 243(b)(2).

(o) *Alternative tax*—(1) *In general.* For purposes of the alternative tax under paragraph (f)(7)(ii) of this section, consolidated net capital gain is the sum of the following two amounts:

(i) The nonlife consolidated net capital gain reduced by any setoff of a life consolidated net capital loss.

(ii) The life consolidated net capital gain reduced by any setoff of a nonlife consolidated net capital loss.

(2) *Net capital gain.* For purposes of this paragraph (o):

(i) Nonlife consolidated net capital gain is computed under §§1.1502–41A or 1.1502–22T (as appropriate) except that it may not exceed nonlife consolidated taxable income (computed under paragraph (h) of this section).

(ii) Life consolidated net capital gain is computed under §§1.1502–41A or 1.1502–22T (as appropriate), applied in a manner consistent with paragraph (l)(4) of this section, except that it may not exceed consolidated partial LICTI (as determined under paragraph (j) of this section).

(iii) *Setoffs.* Setoffs are determined under paragraphs (m) or (n) of this section (as the case may be).

(p) *Transitional rule for credit carryovers.* For limitations on credits arising in taxable years ending before January 1, 1981, that may be carried over to taxable years beginning on or after that date, section 1507(c)(2)(A) of the Tax Reform Act of 1976 and the principles in paragraph (h)(3) of this section (relating to limitations on loss carryovers) apply.

(q) *Preemption.* The rules in this section preempt any inconsistent rules in other sections (§1.1502–1 through 1.1502–80) of the consolidated return regulations. For example, the rules in paragraph (m)(3)(vi) apply notwithstanding §§1.1502–21A(b)(3) and 1.1502–79A(a)(3) (or §1.1502–21, as appropriate).

(r) *Other consolidation principles.* The fact that this section treats the life and nonlife members as separate groups in computing, respectively, consolidated partial LICTI (or LO) and nonlife consolidated taxable income (or loss) does not affect the usual rules in §§1.1502–0—1.1502–80 unless this section provides otherwise. Thus, the usual rules in §1.1502–13 (relating to intercompany transactions) apply to both the life and nonlife members by treating them as members of one affiliated group.

(s) *Filing requirements.* Nonlife consolidated taxable income or loss under paragraph (h) of this section shall be determined on a separate Form 1120 or 1120 M and consolidated partial LICTI under paragraph (j) of this section shall be determined on a separate Form 1120 L. The consolidated return shall be made on a separate Form 1120, 1120 M, or 1120 L by the common parent (if the group includes a life company), which shows the set-offs under paragraphs (g), (m), and (n) of this section and clearly indicates by notation on the face of the return that it is a life-nonlife consolidated return (if the group includes a life company). See also §1.1502–75(j), relating to statements and schedules for subsidiaries.

(Secs. 1502 and 7805 of the Internal Revenue Code of 1954 (68A Stat. 637, 917; 26 U.S.C. 1502, 7805))

[T.D. 7877, 48 FR 11441, Mar. 18, 1983, as amended by T.D. 7912, 48 FR 40215, Sept. 6, 1983; T.D. 8560, 59 FR 41674, Aug. 15, 1994; T.D. 8597, 60 FR 36679–36680, July 18, 1995; T.D. 8677, 61 FR 33324, June 27, 1996; T.D. 8823, 64 FR 36100, July 2, 1999]

§ 1.1502–55 Computation of alternative minimum tax of consolidated groups.

(a)–(h)(3) [Reserved]

(h)(4) *Separate return year minimum tax credit.* (i)–(ii) [Reserved]

(iii)(A) *Limitation on portion of separate return year minimum tax credit arising in separate return limitation years.* The aggregate of a member's minimum tax credits arising in SRLYs that are included in the consolidated minimum tax credits for all consolidated return years of the group may not exceed—

(*1*) The aggregate for all consolidated return years of the member's contributions to the consolidated section 53(c) limitation for each consolidated return year; reduced by

(*2*) The aggregate of the member's minimum tax credits arising and absorbed in all consolidated return years (whether or not absorbed by the member).

(B) *Computational rules—(1) Member's contribution to the consolidated section 53(c) limitation.* Except as provided in the special rule of paragraph (h)(4)(iii)(B)(*2*) of this section, a member's contribution to the consolidated section 53(c) limitation for a consolidated return year equals the member's share of the consolidated net regular tax liability minus its share of consolidated tentative minimum tax. The group computes the member's shares by applying to the respective consolidated amounts the principles of section 1552 and the percentage method under

§ 1.1502–33(d)(3), assuming a 100% allocation of any decreased tax liability. The group makes proper adjustments so that taxes and credits not taken into account in computing the limitation under section 53(c) are not taken into account in computing the member's share of the consolidated net regular tax, etc. (See, for example, the taxes described in section 26(b) that are disregarded in computing regular tax liability.)

(*2*) *Adjustment for year in which alternative minimum tax is paid.* For a consolidated return year for which consolidated tentative minimum tax is greater than consolidated regular tax liability, the group reduces the member's share of the consolidated tentative minimum tax by the member's share of the consolidated alternative minimum tax for the year. The group determines the member's share of consolidated alternative minimum tax for a year using the same method it uses to determine the member's share of the consolidated minimum tax credits for the year.

(*3*) *Years included in computation.* For purposes of computing the limitation under this paragraph (h)(4)(iii), the consolidated return years of the group include only those years, including the year to which a credit is carried, that the member has been continuously included in the group's consolidated return, but exclude any years after the year to which the credit is carried.

(*4*) *Subgroup principles.* The SRLY subgroup principles under § 1.1502–21(c)(2) apply for purposes of this paragraph (h)(4)(iii). The predecessor and successor principles under § 1.1502–21(f) also apply for purposes of this paragraph (h)(4)(iii).

(*5*) *Overlap with section 383.* The principles under § 1.1502–21(g) apply for purposes of this paragraph (h)(4)(iii). For example, an overlap of this paragraph (h)(4)(iii) and the application of section 383 with respect to a credit carryover occurs if a corporation becomes a member of a consolidated group (the SRLY event) within six months of the change date of an ownership change giving rise to a section 383 credit limitation with respect to that carryover (the section 383 event), with the result that the limitation of this paragraph (h)(4)(iii) does not apply. See §§ 1.1502–21(g)(2)(ii)(A) and 1.383–1; see also § 1.1502–21(g)(4) (subgroup rules).

(C) *Effective date—(1) In general.* This paragraph (h)(4)(iii) generally applies to consolidated return years for which the due date of the income tax return (without extensions) is after March 13, 1998. See § 1.1502–3(d)(4) for an optional effective date rule (generally making this paragraph (h)(4)(iii) also applicable to a consolidated return year beginning on or after January 1, 1997, if the due date of the income tax return (without extensions) was on or before March 13, 1998).

(*i*) *Contribution years.* In general, a group does not take into account a consolidated taxable year for which the due date of the income tax return (without extensions) is on or before March 13, 1998, in determining a member's (or subgroup's) contributions to the consolidated section 53(c) limitation under this paragraph (h)(4)(iii). However, if a consolidated group chooses to apply the optional effective date rule, the consolidated group shall not take into account a consolidated taxable year beginning before January 1, 1997 in determining a member's (or subgroup's) contributions to the consolidated section 53(c) limitation under this paragraph (h)(4)(iii).

(*ii*) *Special subgroup rule.* In the event that the principles of § 1.1502–21(g)(1) do not apply to a particular credit carryover in the current group, then solely for purposes of applying this paragraph (h)(4)(iii) to determine the limitation with respect to that carryover and with respect to which the SRLY register (the aggregate of the member's or subgroup's contribution to consolidated section 53(c) limitation reduced by the aggregate of the member's or subgroup's minimum tax credits arising and absorbed in all consolidated return years) began in a taxable year for which the due date of the return is on or before May 25, 2000, the principles of § 1.1502–21(c)(2) shall be applied without regard to the phrase ''or for a carryover that was subject to the overlap rule described in paragraph (g) of this section or § 1.1502–15(g) with respect to another group (the former group).''

(*2*) *Overlap rule.* Paragraph (h)(4)(iii)(B)(*5*) of this section (relating

to overlap with section 383) applies to taxable years for which the due date (without extensions) of the consolidated return is after May 25, 2000. For purposes of paragraph (h)(4)(iii)(B)(*5*) of this section, only an ownership change to which section 383, as amended by the Tax Reform Act of 1986 (100 Stat. 2095), applies and which results in a section 383 credit limitation shall constitute a section 383 event. The optional effective date rule of §1.1502–3(d)(4) (generally making this paragraph (h)(4)(iii) also applicable to a consolidated return year beginning on or after January 1, 1997, if the due date of the income tax return (without extensions) was on or before March 13, 1998) does not apply with respect to paragraph (h)(4)(iii)(B)(*5*) of this section (relating to the overlap rule).

[T.D. 8884, 65 FR 33759, May 25, 2000]

ADMINISTRATIVE PROVISIONS AND OTHER RULES

§ 1.1502–75 Filing of consolidated returns.

(a) *Privilege of filing consolidated returns*—(1) *Exercise of privilege for first consolidated return year.* A group which did not file a consolidated return for the immediately preceding taxable year may file a consolidated return in lieu of separate returns for the taxable year, provided that each corporation which has been a member during any part of the taxable year for which the consolidated return is to be filed consents (in the manner provided in paragraph (b) of this section) to the regulations under section 1502. If a group wishes to exercise its privilege of filing a consolidated return, such consolidated return must be filed not later than the last day prescribed by law (including extensions of time) for the filing of the common parent's return. Such consolidated return may not be withdrawn after such last day (but the group may change the basis of its return at any time prior to such last day).

(2) *Continued filing requirement.* A group which filed (or was required to file) a consolidated return for the immediately preceding taxable year is required to file a consolidated return for the taxable year unless it has an election to discontinue filing consolidated returns under paragraph (c) of this section.

(b) *How consent for first consolidated year exercised*—(1) *General rule.* The consent of a corporation referred to in paragraph (a)(1) of this section shall be made by such corporation joining in the making of the consolidated return for such year. A corporation shall be deemed to have joined in the making of such return for such year if it files a Form 1122 in the manner specified in paragraph (h)(2) of this section.

(2) *Consent under facts and circumstances.* If a member of the group fails to file Form 1122, the Commissioner may under the facts and circumstances determine that such member has joined in the making of a consolidated return by such group. The following circumstances, among others, will be taken into account in making this determination:

(i) Whether or not the income and deductions of the member were included in the consolidated return;

(ii) Whether or not a separate return was filed by the member for that taxable year; and

(iii) Whether or not the member was included in the affiliations schedule, Form 851.

If the Commissioner determines that the member has joined in the making of the consolidated return, such member shall be treated as if it had filed a Form 1122 for such year for purposes of paragraph (h)(2) of this section.

(3) *Failure to consent due to mistake.* If any member has failed to join in the making of a consolidated return under either subparagraph (1) or (2) of this paragraph, then the tax liability of each member of the group shall be determined on the basis of separate returns unless the common parent corporation establishes to the satisfaction of the Commissioner that the failure of such member to join in the making of the consolidated return was due to a mistake of law or fact, or to inadvertence. In such case, such member shall be treated as if it had filed a Form 1122 for such year for purposes of paragraph (h)(2) of this section, and thus joined in the making of the consolidated return for such year.

(c) *Election to discontinue filing consolidated returns*—(1) *Good cause*—(i) *In general.* Notwithstanding that a consolidated return is required for a taxable year, the Commissioner, upon application by the common parent, may for good cause shown grant permission to a group to discontinue filing consolidated returns. Any such application shall be made to the Commissioner of Internal Revenue, Washington, DC 20224, and shall be made not later than the 90th day before the due date for the filing of the consolidated return (including extensions of time). In addition, if an amendment of the Code, or other law affecting the computation of tax liability, is enacted and the enactment is effective for a taxable year ending before or within 90 days after the date of enactment, then application for such a taxable year may be made not later than the 180th day after the date of enactment, and if the application is approved the permission to discontinue filing consolidated returns will apply to such taxable year notwithstanding that a consolidated return has already been filed for such year.

(ii) *Substantial adverse change in law affecting tax liability.* Ordinarily, the Commissioner will grant a group permission to discontinue filing consolidated returns if the net result of all amendments to the Code or regulations with effective dates commencing within the taxable year has a substantial adverse effect on the consolidated tax liability of the group for such year relative to what the aggregate tax liability would be if the members of the group filed separate returns for such year. Thus, for example, assume P and S filed a consolidated return for the calendar year 1966 and that the provisions of the Code have been amended by a bill which was enacted by Congress in 1966, but which is first effective for taxable years beginning on or after January 1, 1967. Assume further that P makes a timely application to discontinue filing consolidated returns. In order to determine whether the amendments have a substantial adverse effect on the consolidated tax liability for 1967, relative to what the aggregate tax liability would be if the members of the group filed separate returns for 1967, the difference between the tax liability of the group computed on a consolidated basis and taking into account the changes in the law effective for 1967 and the aggregate tax liability of the members of the group computed as if each such member filed separate returns for such year (also taking into account such changes) shall be compared with the difference between the tax liability of such group for 1967 computed on a consolidated basis without regard to the changes in the law effective in such year and the aggregate tax liability of the members of the group computed as if separate returns had been filed by such members for such year without regard to the changes in the law effective in such year.

(iii) *Other factors.* In addition, the Commissioner will take into account other factors in determining whether good cause exists for granting permission to discontinue filing consolidated returns beginning with the taxable year, including:

(*a*) Changes in law or circumstances, including changes which do not affect Federal income tax liability,

(*b*) Changes in law which are first effective in the taxable year and which result in a substantial reduction in the consolidated net operating loss (or consolidated unused investment credit) for such year relative to what the aggregate net operating losses (or investment credits) would be if the members of the group filed separate returns for such year, and

(*c*) Changes in the Code or regulations which are effective prior to the taxable year but which first have a substantial adverse effect on the filing of a consolidated return relative to the filing of separate returns by members of the group in such year.

(2) *Discretion of Commissioner to grant blanket permission*—(i) *Permission to all groups.* The Commissioner, in his discretion, may grant all groups permission to discontinue filing consolidated returns if any provision of the Code or regulations has been amended and such amendment is of the type which could have a substantial adverse effect on the filing of consolidated returns by substantially all groups, relative to the filing of separate returns. Ordinarily,

the permission to discontinue shall apply with respect to the taxable year of each group which includes the effective date of such an amendment.

(ii) *Permission to a class of groups.* The Commissioner, in his discretion, may grant a particular class of groups permission to discontinue filing consolidated returns if any provision of the Code or regulations has been amended and such amendment is of the type which could have a substantial adverse effect on the filing of consolidated returns by substantially all such groups relative to the filing of separate returns. Ordinarily, the permission to discontinue shall apply with respect to the taxable year of each group within the class which includes the effective date of such an amendment.

(3) *Time and manner for exercising election.* If, under subparagraph (1) or (2) of this paragraph, a group has an election to discontinue filing consolidated returns for any taxable year and such group wishes to exercise such election, then the common parent must file a separate return for such year on or before the last day prescribed by law (including extensions of time) for the filing of the consolidated return for such year. See section 6081 (relating to extensions of time for filing returns).

(d) *When group remains in existence*—(1) *General rule.* A group remains in existence for a tax year if the common parent remains as the common parent and at least one subsidiary that was affiliated with it at the end of the prior year remains affiliated with it at the beginning of the year, whether or not one or more corporations have ceased to be subsidiaries at any time after the group was formed. Thus, for example, assume that individual A forms corporation P. P acquires 100 percent of the stock of corporation S on January 1, 1965, and P and S file a consolidated return for the calendar year 1965. On May 1, 1966, P acquires 100 percent of the stock of S–1, and on July 1, 1966, P sells the stock of S. The group (consisting originally of P and S) remains in existence in 1966 since P has remained as the common parent and at least one subsidiary (now S–1) remains affiliated with it.

(2) *Common parent no longer in existence*—(i) *Mere change in identity.* For purposes of this paragraph, the common parent corporation shall remain as the common parent irrespective of a mere change in identity, form, or place of organization of such common parent corporation (see section 368(a)(1)(F)).

(ii) *Transfer of assets to subsidiary.* The group shall be considered as remaining in existence notwithstanding that the common parent is no longer in existence if the members of the affiliated group succeed to and become the owners of substantially all of the assets of such former parent and there remains one or more chains of includible corporations connected through stock ownership with a common parent corporation which is an includible corporation and which was a member of the group prior to the date such former parent ceases to exist. For purposes of applying paragraph (f)(2)(i) of § 1.1502–1 to separate return years ending on or before the date on which the former parent ceases to exist, such former parent, and not the new common parent, shall be considered to be the corporation described in such paragraph.

(iii) *Taxable years.* If a transfer of assets described in subdivision (ii) of this subparagraph is an acquisition to which section 381(a) applies and if the group files a consolidated return for the taxable year in which the acquisition occurs, then for purposes of section 381:

(*a*) The former common parent shall not close its taxable year merely because of the acquisition, and all taxable years of such former parent ending on or before the date of acquisition shall be treated as taxable years of the acquiring corporation, and

(*b*) The corporation acquiring the assets shall close its taxable year as of the date of acquisition, and all taxable years of such corporation ending on or before the date of acquisition shall be treated as taxable years of the transferor corporation.

(iv) *Exception.* With respect to acquisitions occurring before January 1, 1971, subdivision (iii) of this subparagraph shall not apply if the group, in its income tax return, treats the taxable year of the former common parent as having closed as of the date of acquisition.

(3) *Reverse acquisitions*—(i) *In general.* If a corporation (hereinafter referred to as the ''first corporation'') or any member of a group of which the first corporation is the common parent acquires after October 1, 1965:

(*a*) Stock of another corporation (hereinafter referred to as the second corporation), and as a result the second corporation becomes (or would become but for the application of this subparagraph) a member of a group of which the first corporation is the common parent, or

(*b*) Substantially all the assets of the second corporation,

in exchange (in whole or in part) for stock of the first corporation, and the stockholders (immediately before the acquisition) of the second corporation, as a result of owning stock of the second corporation, own (immediately after the acquisition) more than 50 percent of the fair market value of the outstanding stock of the first corporation, then any group of which the first corporation was the common parent immediately before the acquisition shall cease to exist as of the date of acquisition, and any group of which the second corporation was the common parent immediately before the acquisition shall be treated as remaining in existence (with the first corporation becoming the common parent of the group). Thus, assume that corporations P and S comprised group PS (P being the common parent), that P was merged into corporation T (the common parent of a group composed of T and corporation U), and that the shareholders of P immediately before the merger, as a result of owning stock in P, own 90 percent of the fair market value of T's stock immediately after the merger. The group of which P was the common parent is treated as continuing in existence with T and U being added as members of the group, and T taking the place of P as the common parent.

For purposes of determining under (*a*) of this subdivision whether the second corporation becomes (or would become) a member of the group of which the first corporation is the common parent, and for purposes of determining whether the former stockholders of the second corporation own more than 50 percent of the outstanding stock of the first corporation, there shall be taken into account any acquisitions or redemptions of the stock of either corporation which are pursuant to a plan of acquisition described in (*a*) or (*b*) of this subdivision.

(ii) *Prior ownership of stock.* For purposes of subdivision (i) of this subparagraph, if the first corporation, and any members of a group of which the first corporation is the common parent, have continuously owned for a period of at least 5 years ending on the date of the acquisition an aggregate of at least 25 percent of the fair market value of the outstanding stock of the second corporation, then the first corporation (and any subsidiary which owns stock of the second corporation immediately before the acquisition) shall, as a result of owning such stock, be treated as owning (immediately after the acquisition) a percentage of the fair market value of the first corporation's outstanding stock which bears the same ratio to (*a*) the percentage of the fair market value of all the stock of the second corporation owned immediately before the acquisition by the first corporation and its subsidiaries as (*b*) the fair market value of the total outstanding stock of the second corporation immediately before the acquisition bears to (*c*) the sum of (*1*) the fair market value, immediately before the acquisition, of the total outstanding stock of the first corporation, and (*2*) the fair market value, immediately before the acquisition, of the total outstanding stock of the second corporation (other than any such stock owned by the first corporation and any of its subsidiaries). For example, assume that corporation P owns stock in corporation T having a fair market value of $100,000, that P acquires the remaining stock of T from individuals in exchange for stock of P, that immediately before the acquisition the total outstanding stock of T had a fair market value of $150,000, and that immediately before the acquisition the total outstanding stock of P had a fair market value of $200,000. Assuming P owned at least 25 percent of the fair market value of T's stock for 5 years, then for purposes of this subparagraph,

P is treated as owning (immediately after the acquisition) 40 percent of the fair market value of its own outstanding stock, determined as follows:

[$150,000/($200,000+$50,000)]×662/3%=40%.

Thus, if the former individual stockholders of T own, immediately after the acquisition more than 10 percent of the fair market value of the outstanding stock of P as a result of owning stock of T, the group of which T was the common parent is treated as continuing in existence with P as the common parent, and the group of which P was the common parent before the acquisition ceases to exist.

(iii) *Election*. The provisions of subdivision (ii) of this subparagraph shall not apply to any acquisition occurring in a taxable year ending after October 7, 1969, unless the first corporation elects to have such subdivision apply. The election shall be made by means of a statement, signed by any officer who is duly authorized to act on behalf of the first corporation, stating that the corporation elects to have the provisions of §1.1502–75(d)(3)(ii) apply and identifying the acquisition to which such provisions will apply. The statement shall be filed, on or before the due date (including extensions of time) of the return for the group's first consolidated return year ending after the date of the acquisition, with the internal revenue officer with whom such return is required to be filed.

(iv) *Transfer of assets to subsidiary*. This subparagraph shall not apply to a transaction to which subparagraph (2)(ii) of this paragraph applies.

(v) *Taxable years*. If, in a transaction described in subdivision (i) of this subparagraph, the first corporation files a consolidated return for the first taxable year ending after the date of acquisition, then:

(*a*) The first corporation, and each corporation which, immediately before the acquisition, is a member of the group of which the first corporation is the common parent, shall close its taxable year as of the date of acquisition, and each such corporation shall, immediately after the acquisition, change to the taxable year of the second corporation, and

(*b*) If the acquisition is a transaction described in section 381(a)(2), then for purposes of section 381:

(*1*) All taxable years ending on or before the date of acquisition, of the first corporation and each corporation which, immediately before the acquisition, is a member of the group of which the first corporation is the common parent, shall be treated as taxable years of the transferor corporation, and

(*2*) The second corporation shall not close its taxable year merely because of such acquisition, and all taxable years ending on or before the date of acquisition, of the second corporation and each corporation which, immediately before the acquisition, is a member of any group of which the second corporation is the common parent, shall be treated as taxable years of the acquiring corporation.

(vi) *Exception*. With respect to acquisitions occurring before April 17, 1968, subdivision (v) of this subparagraph shall not apply if the parties to the transaction, in their income tax returns, treat subdivision (i) as not affecting the closing of taxable years or the operation of section 381.

(4) [Reserved]

(5) *Coordination with section 833*—(i) *Election to continue old group*. If, solely by reason of the enactment of section 833 (relating to certain Blue Cross or Blue Shield organizations and certain other health insurers), an organization to which section 833 applies (a ''section 833 organization'') became the new common parent of an old group on January 1, 1987, the old group may elect to continue in existence with that section 833 organization as its new common parent, provided all the old groups having the same section 833 organization as their new common parent elect to continue in existence. To revoke this election, see paragraph (d)(5)(x) of this section. To file as a new group, see paragraph (d)(5)(v) of this section.

(ii) *Old group*. For purposes of this paragraph (d)(5), an old group is a group which, for its last taxable year ending in 1986, either filed a consolidated return or was eligible to (but did not) file a consolidated return.

(iii) *Manner of electing to continue*—(A) *Deemed election*. If all the members

of all the old groups having the same section 833 organization as their new common parent are included for the first taxable year beginning after December 31, 1986, on the same consolidated (or amended consolidated) return and a Form 1122 was not filed, the old groups are deemed to have elected under paragraph (d)(5)(i) of this section to continue in existence.

(B) *Delayed election.* If a deemed election to continue in existence was not made under paragraph (d)(5)(iii)(A) of this section, all the members of all the old groups having the same section 833 organization as their new common parent may make a delayed election under paragraph (d)(5)(i) of this section to continue in existence by:

(*1*) Filing an appropriate consolidated (or amended consolidated) return or returns for each taxable year beginning after December 31, 1986, (notwithstanding §1.1502–75(a)(1)) on or before January 3, 1991, and

(*2*) On the top of any such return prominently affixing a statement containing the following declaration: ''THIS RETURN'' (or, if applicable, ''AMENDED RETURN'') ''REFLECTS A DELAYED ELECTION TO CONTINUE UNDER §1.1502–75T(d)(5)(iii)(B)''. A delayed election to continue in existence automatically revokes a deemed election to file as a new group which was made under paragraph (d)(5)(vi) of this section.

(iv) *Effects of election to continue in existence.* If an old group or groups elect to continue in existence under paragraph (d)(5)(i) of this section, the following rules apply:

(A) *Taxable years.* Each member that filed returns other than on a calendar year basis shall close its taxable year on December 31, 1986, and change to a calendar year beginning on January 1, 1987. See section 843 and §1.1502–76(a)(1).

(B) *Carryovers from separate return limitation years.* For purposes of applying the separate return limitation year rules to carryovers from taxable years beginning before 1987 to taxable years beginning after 1986, the following rules apply:

(*1*) Any taxable year beginning before 1987 of a corporation that was not a member of an old group (including a section 833 organization) will be treated as a separate return limitation year;

(*2*) Any taxable year beginning before 1987 of a corporation that was a member of an old group that, without regard to this section and the enactment of section 833, was a separate return limitation year will continue to be treated as a separate return limitation year;

(*3*) Any taxable year beginning before 1987 of a member of an old group (other than a separate return limitation year described in paragraph (d)(5)(iv)(B)(*2*) of this section) will not be treated as a separate return limitation year with respect to any corporation that was a member of such group for each day of that taxable year; and

(*4*) Any taxable year beginning before 1987 of a member of an old group will be treated as a separate return limitation year with respect to any corporation that was not a member of such group for each day of that taxable year (*e.g.*, a corporation that was not a member of an old group, including a section 833 organization, or a corporation that was a member of another old group).

(C) *Five-year rules for life-nonlife groups.* Any life-nonlife election under section 1504(c)(2) in effect for an old group remains in effect. Any old group which was eligible to make a life-nonlife election will remain eligible to make the election. For purposes of section 1503(c), a nonlife member is treated as ineligible under §1.1502–47(d)(13) with respect to a life member, unless both were members of the same affiliated group (determined without regard to the exclusions in section 1504(b) (1) and (2)) for five taxable years immediately preceding the taxable year in which the loss arose. See paragraph (d)(5)(ix) of this section for a tacking rule.

(v) *Election to file as a new group.* If, solely by reason of the enactment of section 833, a section 833 organization became the new common parent of an old group on January 1, 1987, the application of the five-year prohibition on reconsolidation in section 1504(a)(3)(A) to the old group is waived and the old group together with the new section 833 organization common parent may elect to file as a new group provided that all includible corporations elect

to file a consolidated (or amended consolidated) return as a new group for the first taxable year beginning after December 31, 1986. To revoke this election, see paragraph (d)(5)(x) of this section.

(vi) *Manner of electing to file as a new group*—(A) *Deemed election.* The old group or groups and the section 833 organization are deemed to have elected under paragraph (d)(5)(v) of this section to file as a new group by filing, for the first taxable year beginning after December 31, 1986, a Form 1122 and a consolidated (or amended consolidated) tax return.

(B) *Delayed election.* If a deemed election to file as a new group was not made pursuant to paragraph (d)(5)(vi)(A) of this section, the old group or groups and the section 833 organization may make a delayed election under paragraph (d)(5)(v) of this section to file as a new group by

(*1*) Filing an appropriate consolidated (or amended consolidated) return or returns for each taxable year beginning after December 31, 1986 (notwithstanding §1.1502–75(a)(1)) on or before January 3, 1991, and

(*2*) On the top of any such return prominently affixing a statement containing the following declaration: ''THIS RETURN'' (or, if applicable, ''AMENDED RETURN'') ''REFLECTS A DELAYED ELECTION TO FILE AS A NEW GROUP UNDER §1.1502–75T (d)(5)(vi)(B)''. A delayed election to file as a new group automatically revokes any deemed election to continue in existence which was made under paragraph (d)(5)(iii) of this section.

(vii) *Effects of election to file as a new group.* If an old group or groups elect to file as a new group under paragraph (d)(5)(v) of this section, the following rules apply:

(A) *Termination.* Each old group is treated as if it terminated on January 1, 1987, and the termination is not treated as resulting from the acquisition by a nonmember of all of the stock of the common parent.

(B) *Taxable years.* Each member that filed returns other than on a calendar year basis shall close its taxable year on December 31, 1986, and change to a calendar year beginning on January 1, 1987. See section 843 and §1.1502–76(a)(1).

(C) *Separate return limitation year and life-nonlife groups.* For purposes of §1.1502–1(f), sections 1503(c) and 1504(c), and §1.1502–47, the group is treated as coming into existence as a new group on January 1, 1987. Thus, for example, paragraphs (d)(5)(iv) (B) and (C) of this section do not apply.

(viii) *Earnings and profits.* All distributions after January 1, 1987 by a corporation, whether or not such corporation was a member of an old group, to an existing Blue Cross or Blue Shield organization (as defined in section 833(c)(2)) out of earnings and profits accumulated before 1987 are deemed made out of earnings and profits accumulated in pre-affiliation years. See §1.1502–32(h)(5).

(ix) *Five-year tacking rules for certain life-nonlife groups.* For purposes of applying §1.1502–47(d) (5) and (12) to any taxable year ending after 1986 to a corporation, whether or not the corporation was a member of an old group,

(A) The determination of whether the corporation was in existence and a member or tentatively treated as a member of a group, for taxable years ending before 1987, is made without regard to the exclusions under section 1504(b) (1) and (2) of any section 833 organization or life insurance company (as the case may be) and

(B) A section 833 organization is not treated as having a change in tax character solely by reason of the loss of its tax-exempt status due to the enactment of section 833.

This paragraph (d)(5)(ix) does not apply if an election to file as a new group under paragraph (d)(5)(v) of this section is made.

(x) *Time to revoke elections made before September 5, 1990.* An election by an old group to continue in existence or to file as a new group that was made (or deemed made) before September 5, 1990, may be revoked by filing an appropriate return (or returns) on or before January 3, 1991. For purposes of this paragraph (d)(5)(x), appropriate returns include separate returns filed by each member of the group or consolidated returns filed in accordance with a delayed election either under paragraph (d)(5)(iii)(B) or (vi)(B) of this section.

(xi) *Examples.* The following examples illustrate this paragraph (d)(5). In these examples, each corporation uses the calendar year as its taxable year.

Example 1. B is a section 833 organization. For several years, B has owned all of the outstanding stock of X, Y, and Z. X has owned all the outstanding stock of X_1 throughout X_1's existence and Y has owned all of the outstanding stock of Y_1 throughout Y_1's existence. For 1986 X and X_1 filed a consolidated federal income tax return but Y and Y_1 filed separate returns. Under paragraph (d)(5)(ii) of this section, X and X_1 and Y and Y_1 each constitute an old group because they either filed a consolidated return or were eligible to file a consolidated return for 1986. The X and Y groups may elect under paragraph (d)(5)(i) of this section to continue in existence. If they elect to continue, under paragraph (d)(5)(iv)(B) of this section, the separate return limitation year rules apply as follows: any taxable year of B or Z beginning before 1987 is treated as a separate return limitation year with respect to each other and to all other members of the group; any taxable year of X or X_1 beginning before 1987 is treated as a separate return limitation year with respect to B, Z, Y and Y_1, but not with respect to each other; and any taxable year of Y or Y_1 beginning before 1987 is treated as a separate return limitation year with respect to B, Z, X and X_1, but not with respect to each other.

Example 2. The facts are the same as in Example 1 except that B is owned by C, another section 833 organization. If the X and Y groups elect to continue, the results are the same as in Example 1, except that, under paragraph (d)(5)(iv)(B)(*1*) of this section, for purposes of applying the separate return limitation year rules, any taxable year of C beginning before 1987 is also treated as a separate return limitation year with respect to all other members of the group.

Example 3. The facts are the same as in Example 1 except that Y purchased Y_1 on January 1, 1985. If the X and Y groups elect to continue, the results are the same as in Example 1, except that, under paragraph (d)(5)(iv)(B)(*2*) of this section, for purposes of applying the separate return limitation year rules, any taxable year of Y_1 beginning before 1985 is treated as a separate return limitation year with respect to Y as well as with respect to all other members of the group.

Example 4. B, a section 833 organization, has owned all the stock of X since November 1984. X has owned all the stock of L, a life insurance company, throughout L's existence. In 1986, X and L properly filed a life-nonlife consolidated return. Under paragraph (d)(5)(i) of this section, the X group elects to continue in existence. Under paragraph (d)(5)(iv)(C) of this section, the life-nonlife election will remain in effect. However, losses of B which arise before 1990 cannot be used to offset the income of L. See section 1503(c)(2) and §1.1502–47(d)(13) and paragraph (d)(5)(iv)(C) of this section. Under paragraph (d)(5)(iv)(B) of this section, the separate return limitation year rules apply as follows: any taxable year of B beginning before 1987 is treated as a separate return limitation year with respect to all other members of the group; and any taxable year of X or L beginning before 1987 is treated as a separate return limitation year with respect to B, but not with respect to each other.

Example 5. The facts are the same as Example 4 except that, on January 1, 1984, B formed L_1, a life insurance company. Under paragraph (d)(5)(ix) of this section and section 1504(c), the first year L_1 is eligible to join in B's life-nonlife election is 1989.

Example 6. The facts are the same as in Example 4 except that B and the X group elect under paragraph (d)(5)(v) of this section to file as a new group. The X group will be considered to have terminated under §1.1502–75(d)(1) on December 31, 1986. X and L are each separately subject to the separate return limitation year rules of §1.1502–1(f). The first year L and L_1 are eligible to join the new group in a life-nonlife election is 1992 (five years after the new group is formed). See section 1504(c)(2) and paragraphs (d)(5)(vii)(C) and (ix) of this section.

The provisions contained in this Treasury decision are needed to immediately amend the consolidated return regulations in response to changes made by section 1012 of the Tax Reform Act of 1986. It is therefore found impracticable and contrary to the public interest to issue this Treasury decision with notice and public procedure under section 553(b) of title 5 of the United States Code or subject to the effective date limitations of section 553(d) of title 5, United States Code.

(e) *Failure to include subsidiary.* If a consolidated return is required for the taxable year under the provisions of paragraph (a)(2) of this section, the tax liability of all members of the group for such year shall be computed on a consolidated basis even though:

(1) Separate returns are filed by one or more members of the group, or

(2) There has been a failure to include in the consolidated return the income of any member of the group.

If subparagraph (1) of this paragraph applies, the amounts assessed or paid upon the basis of separate returns shall be considered as having been assessed

or paid upon the basis of a consolidated return.

(f) *Inclusion of one or more corporations not members of the group*—(1) *Method of determining tax liability*. If a consolidated return includes the income of a corporation which was not a member of the group at any time during the consolidated return year, the tax liability of such corporation will be determined upon the basis of a separate return (or a consolidated return of another group, if paragraph (a)(2) or (b)(3) of this section applies), and the consolidated return will be considered as including only the income of the corporations which were members of the group during that taxable year. If a consolidated return includes the income of two or more corporations which were not members of the group but which constitute another group, the tax liability of such corporations will be computed in the same manner as if separate returns had been made by such corporations unless the Commissioner upon application approves the making of a consolidated return for the other group or unless under paragraph (a)(2) of this section a consolidated return is required for the other group.

(2) *Allocation of tax liability*. In any case in which amounts have been assessed and paid upon the basis of a consolidated return and the tax liability of one or more of the corporations included in the consolidated return is to be computed in the manner described in subparagraph (1) of this paragraph, the amounts so paid shall be allocated between the group composed of the corporations properly included in the consolidated return and each of the corporations the tax liability of which is to be computed on a separate basis (or on the basis of a consolidated return of another group) in such manner as the corporations which were included in the consolidated return may, subject to the approval of the Commissioner, agree upon or in the absence of an agreement upon the method used in allocating the tax liability of the members of the group under the provisions of section 1552(a).

(g) *Computing periods of limitation*—(1) *Income incorrectly included in consolidated return*. If:

(i) A consolidated return is filed by a group for the taxable year, and

(ii) The tax liability of a corporation whose income is included in such return must be computed on the basis of a separate return (or on the basis of a consolidated return with another group), then for the purpose of computing any period of limitation with respect to such separate return (or such other consolidated return), the filing of such consolidated return by the group shall be considered as the making of a return by such corporation.

(2) *Income incorrectly included in separate returns.* If a consolidated return is required for the taxable year under the provisions of paragraph (a)(2) of this section, the filing of separate returns by the members of the group for such year shall not be considered as the making of a return for the purpose of computing any period of limitation with respect to such consolidated return unless there is attached to each such separate return a statement setting forth:

(i) The most recent taxable year of the member for which its income was included in a consolidated return, and

(ii) The reasons for the group's belief that a consolidated return is not required for the taxable year.

(h) *Method of filing return and forms*—(1) *Consolidated return made by common parent corporation*. The consolidated return shall be made on Form 1120 for the group by the common parent corporation. The consolidated return, with Form 851 (affiliations schedule) attached, shall be filed with the district director with whom the common parent would have filed a separate return.

(2) [Reserved]. For further guidance, *see* § 1.1502–75T(h)(2).

(3) *Persons qualified to execute returns and forms.* Each return or form required to be made or prepared by a corporation must be executed by the person authorized under section 6062 to execute returns of separate corporations.

(i) [Reserved]

(j) *Statements and schedules for subsidiaries.* The statement of gross income and deductions and the schedules required by the instructions on the return shall be prepared and filed in columnar form so that the details of the items of gross income, deductions, and

credits for each member may be readily audited. Such statements and schedules shall include in columnar form a reconciliation of surplus for each corporation, and a reconciliation of consolidated surplus. Consolidated balance sheets as of the beginning and close of the taxable year of the group, taken from the books of the members, shall accompany the consolidated return and shall be prepared in a form similar to that required for reconciliation of surplus.

(k) *Cross-reference.* See §1.338(h)(10)–1(d)(7) for special rules regarding filing consolidated returns when a section 338(h)(10) election is made for a target acquired from a selling consolidated group.

[T.D. 6894, 31 FR 11794, Sept. 8, 1966, as amended by T.D. 7016, 34 FR 15556, Oct. 7, 1969; T.D. 7024, 35 FR 2774, Feb. 10, 1970; T.D. 7244, 37 FR 28897, Dec. 30, 1972; T.D. 7246, 38 FR 766, Jan. 4, 1973; T.D. 8438, 57 FR 44333, Sept. 25, 1992; T.D. 8515, 59 FR 2984, Jan. 20, 1994; T.D. 8560, 59 FR 41675, 41700, Aug. 15, 1994; T.D. 8858, 65 FR 1237, Jan. 7, 2000; 66 FR 9929, Feb. 13, 2001; T.D. 9100, 68 FR 70707, Dec. 19, 2003]

§1.1502–75T Filing of consolidated returns (temporary).

(a) through (h)(1) [Reserved]. For further guidance, *see* §1.1502–75(a) through (h)(1).

(2) *Filing of Form 1122 for first year.* If, under the provisions of §1.1502–75 (a)(1), a group wishes to file a consolidated return for a taxable year, then a Form 1122 (''Authorization and Consent of Subsidiary Corporation To Be Included in a Consolidated Income Tax Return'') must be executed by each subsidiary. For taxable years beginning before January 1, 2003, the executed Forms 1122 must be attached to the consolidated return for the taxable year. For taxable years beginning after December 31, 2002, the group must attach either executed Forms 1122 or unsigned copies of the completed Forms 1122 to the consolidated return. If the group submits unsigned Forms 1122 with its return, it must retain the signed originals in its records in the manner required by §1.6001–1(e). Form 1122 is not required for a taxable year if a consolidated return was filed (or was required to be filed) by the group for the immediately preceding taxable year.

(h)(3) through (k) [Reserved]. For further guidance, *see* §1.1502–75(h)(3) through (k).

[T.D. 9100, 68 FR 70707, Dec. 19, 2003]

§1.1502–76 Taxable year of members of group.

(a) *Taxable year of members of group*—(1) *Change to parent's taxable year.* The consolidated return of a group must be filed on the basis of the common parent's taxable year, and each subsidiary must adopt the common parent's annual accounting period for the first consolidated return year for which the subsidiary's income is includible in the consolidated return. If any member is on a 52–53-week taxable year, the rule of the preceding sentence shall, with the advance consent of the Commissioner, be deemed satisfied if the taxable years of all members of the group end within the same 7-day period. Any request for such consent shall be filed with the Commissioner of Internal Revenue, Washington, DC 20224, not later than the 30th day before the due date (not including extensions of time) for the filing of the consolidated return.

(2) *Includible insurance company as member of group.* If an includible insurance company required by section 843 to file its return on the basis of a calendar year is a member of the group and if the common parent of such group files its return on the basis of a fiscal year, then the first consolidated return which includes the income of such insurance company may be filed on the basis of the common parent's fiscal year, provided, however, that if such insurance company is a member of the group on the last day of the common parent's taxable year, all members other than such insurance company change to a calendar year or to a 52–53-week taxable year ending within a 7-day period which includes December 31, effective immediately after the close of the common parent's taxable year. If any member changes to a 52–53-week taxable year, the advance consent of the Commissioner shall be obtained in accordance with subparagraph (1) of this paragraph.

(b) *Items included in the consolidated return*—(1) *General rules*—(i) *In general.* A consolidated return must include the

common parent's items of income, gain, deduction, loss, and credit for the entire consolidated return year, and each subsidiary's items for the portion of the year for which it is a member. If the consolidated return includes the items of a corporation for only a portion of its tax year determined without taking this section into account, items for the portion of the year not included in the consolidated return must be included in a separate return (including the consolidated return of another group). The rules of this paragraph (b) must be applied to prevent the duplication or elimination of the corporation's items.

(ii) *The day a corporation becomes or ceases to be a member*—(A) *End of the day rule.* (*1*) *In general.* If a corporation (S), other than one described in paragraph (b)(1)(ii)(A)(*2*) of this section, becomes or ceases to be a member during a consolidated return year, it becomes or ceases to be a member at the end of the day on which its status as a member changes, and its tax year ends for all Federal income tax purposes at the end of that day. Appropriate adjustments must be made if another provision of the Internal Revenue Code or the regulations thereunder contemplates the event occurring before or after S's change in status. For example, S's items restored under §1.1502–13 immediately before it becomes a nonmember are taken into account in determining the basis of S's stock under §1.1502–32. On the other hand, if a section 338(g) election is made in connection with S becoming a member, the deemed asset sale under that section takes place before S becomes a member. See §1.338–10(a)(5) (deemed sale excluded from purchasing corporation's consolidated return.)

(*2*) *Special rule for former S corporations.* If S becomes a member in a transaction other than in a qualified stock purchase for which an election under section 338(g) is made, and immediately before becoming a member an election under section 1362(a) was in effect, then S will become a member at the beginning of the day the termination of its S corporation election is effective. S's tax year ends for all Federal income tax purposes at the end of the preceding day. This paragraph (b)(1)(ii)(A)(*2*) applies to transactions occurring after November 10, 1999.

(B) *Next day rule.* If, on the day of S's change in status as a member, a transaction occurs that is properly allocable to the portion of S's day after the event resulting in the change, S and all persons related to S under section 267(b) immediately after the event must treat the transaction for all Federal income tax purposes as occurring at the beginning of the following day. A determination as to whether a transaction is properly allocable to the portion of S's day after the event will be respected if it is reasonable and consistently applied by all affected persons. In determining whether an allocation is reasonable, the following factors are among those to be considered—

(*1*) Whether income, gain, deduction, loss, and credit are allocated inconsistently (e.g., to maximize a seller's stock basis adjustments under §1.1502–32);

(*2*) If the item is from a transaction with respect to S stock, whether it reflects ownership of the stock before or after the event (e.g., if a member transfers encumbered land to nonmember S in exchange for additional S stock in a transaction to which section 351 applies and the exchange results in S becoming a member of the consolidated group, the applicability of section 357(c) to the exchange must be determined under §1.1502–80(d) by treating the exchange as occurring after the event; on the other hand, if S is a member but has a minority shareholder and becomes a nonmember as a result of its redemption of stock with appreciated property, S's gain under section 311 is treated as from a transaction occurring before the event);

(*3*) Whether the allocation is inconsistent with other requirements under the Internal Revenue Code and regulations promulgated thereunder (e.g., if a section 338(g) election is made in connection with a group's acquisition of S, the deemed asset sale must take place before S becomes a member and S's gain or loss with respect to its assets must be taken into account by S as a nonmember (but see §1.338–1(d)), or if S realizes discharge of indebtedness income that is excluded from gross income under section 108(a) on the day it

becomes a nonmember, the discharge of indebtedness income must be treated as realized by S as a member (see § 1.1502–28(b)(11))); and

(*4*) Whether other facts exist, such as a prearranged transaction or multiple changes in S's status, indicating that the transaction is not properly allocable to the portion of S's day after the event resulting in S's change.

(C) *Successor corporations.* For purposes of this paragraph (b)(1)(ii), any reference to a corporation includes a reference to a successor or predecessor as the context may require. A corporation is a successor if the basis of its assets is determined, directly or indirectly, in whole or in part, by reference to the basis of the assets of another corporation (the predecessor). For example, if a member forms S, S is treated as a member from the beginning of its existence.

(iii) *Group structure changes.* If the common parent ceases to be the common parent but the group remains in existence, adjustments must be made in accordance with the principles of § 1.1502–75(d)(2) and (3).

(2) *Determination of items included in separate and consolidated returns*—(i) *In general.* The returns for the years that end and begin with S becoming (or ceasing to be) a member are separate tax years for all Federal income tax purposes. The returns are subject to the rules of the Internal Revenue Code applicable to short periods, as if S ceased to exist on becoming a member (or first existed on becoming a nonmember). For example, cost recovery deductions under section 168 must be allocated for short periods. On the other hand, annualization under section 443 is not required of S solely because it has a short year as a result of becoming a member. (Similarly, section 443 applies with respect to a consolidated return only to the extent that the group's return is for a short period and section 443 applies without taking this paragraph (b) into account.)

(ii) *Ratable allocation of a year's items*—(A) *Application.* Although the periods ending and beginning with S's change in status are different tax years, items (other than extraordinary items) may be ratably allocated between the periods if—

(*1*) S is not required to change its annual accounting period or its method of accounting as a result of its change in status (e.g., because its stock is sold between consolidated groups that have the same annual accounting periods); and

(*2*) An irrevocable ratable allocation election is made under paragraph (b)(2)(ii)(D) of this section.

(B) *General rule*—(*1*) *Allocation within original year.* Under a ratable allocation election, paragraph (b)(2) of this section applies by allocating to each day of S's original year (S's tax year determined without taking this section into account) an equal portion of S's items taken into account in the original year, except that extraordinary items must be allocated to the day that they are taken into account. All persons affected by the election must take into account S's extraordinary items and the ratable allocation of S's remaining items in a manner consistent with the election.

(*2*) *Items to be allocated.* Under ratable allocation, the items to be allocated and their timing, location, character, and source are generally determined by treating the original year as a single tax year, and the items are not subject to the rules of the Internal Revenue Code applicable to short periods (unless the original year is a short period). However, the years ending and beginning with S's change in status are treated as different tax years (and as short periods) with respect to any item carried to or from these years (e.g., a net operating loss carried under section 172) and with respect to the application of section 481.

(*3*) *Multiple applications.* If this paragraph (b) applies more than once with respect to an original year, adjustments must be made in accordance with the principles of this paragraph (b). For example, if S becomes a member of two different consolidated groups during the same original year and ratable allocation is elected with respect to both groups, ratable allocation is generally determined for both groups by treating the original year as a single tax year; however, if ratable allocation is elected only with respect

to the first group, the ratable allocation is determined by treating the original year as a short period that does not include the period that S is a member of the second group. Ratable allocation is not a method of accounting, and ratable allocation with respect to one application of this paragraph (b) to S does not require ratable allocation to be subsequently applied with respect to S.

(C) *Extraordinary items.* An extraordinary item is—

(*1*) Any item from the disposition or abandonment of a capital asset as defined in section 1221 (determined without the application of any other rules of law);

(*2*) Any item from the disposition or abandonment of property used in a trade or business as defined in section 1231(b) (determined without the application of any holding period requirement);

(*3*) Any item from the disposition or abandonment of an asset described in section 1221(1), (3), (4), or (5), if substantially all the assets in the same category from the same trade or business are disposed of or abandoned in one transaction (or series of related transactions);

(*4*) Any item from assets disposed of in an applicable asset acquisition under section 1060(c);

(*5*) Any item carried to or from any portion of the original year (e.g., a net operating loss carried under section 172), and any section 481(a) adjustment;

(*6*) The effects of any change in accounting method initiated by the filing of the appropriate form after S's change in status;

(*7*) Any item from the discharge or retirement of indebtedness (e.g., cancellation of indebtedness income or a deduction for retirement at a premium);

(*8*) Any item from the settlement of a tort or similar third-party liability;

(*9*) Any compensation-related deduction in connection with S's change in status (including, for example, deductions from bonus, severance, and option cancellation payments made in connection with S's change in status);

(*10*) Any dividend income from a nonmember that S controls within the meaning of section 304 at the time the dividend is taken into account;

(*11*) Any deemed income inclusion from a foreign corporation, or any deferred tax amount on an excess distribution from a passive foreign investment company under section 1291;

(*12*) Any interest expense allocable under section 172(h) to a corporate equity reduction transaction causing this paragraph (b) to apply;

(*13*) Any credit, to the extent it arises from activities or items that are not ratably allocated (e.g., the rehabilitation credit under section 47, which is based on placement in service); and

(*14*) Any item which, in the opinion of the Commissioner, would, if ratably allocated, result in a substantial distortion of income in any consolidated return or separate return in which the item is included.

(D) *Election.* The election to ratably allocate items under this paragraph (b)(2)(ii) must be made in a separate statement entitled ''THIS IS AN ELECTION UNDER § 1.1502–76(b)(2)(ii) TO RATABLY ALLOCATE THE YEAR'S ITEMS OF [insert name and employer identification number of the member].'' The statement must be signed by the member and by the common parent of each affected group, and must be filed with the returns including the items for the year's ending and beginning with S's change in status. If two or more members of the same consolidated group, as a consequence of the same plan or arrangement, cease to be members of that group and remain affiliated as members of another consolidated group, an election under this paragraph (b)(2)(ii)(D) may be made only if it is made by each such member. The statement must provide all of the following:

(*1*) Identify the extraordinary items, their amounts, and the separate or consolidated returns in which they are included.

(*2*) Identify the aggregate amount to be ratably allocated, and the portion of the amount included in the separate and consolidated returns.

(*3*) Include the name and employer identification number of the common parent (if any) of each group that must take the items into account.

(iii) *Ratable allocation of a month's items.* If ratable allocation under paragraph (b)(2)(ii) of this section is not elected (e.g., because S is required to change its annual accounting period), this paragraph (b)(2)(iii) may be applied to ratably allocate only S's items taken into account in the month of its change in status, but only if the allocation is consistently applied by all affected persons. The ratable allocation is made by applying the principles of paragraph (b)(2)(ii) of this section under any reasonable method. For example, S may close its books both at the end of the preceding month and at the end of the month of the change, and allocate only its items (other than extraordinary items) from the month of the change. See paragraph (b)(1)(ii)(B) of this section for factors to be considered in determining whether the method is reasonable.

(iv) *Taxes.* To the extent properly taken into account during the member's tax year (determined without the application of this paragraph (b)), Federal, state, local, and foreign taxes are allocated under paragraph (b)(2) of this section on the basis of the items or activities to which the taxes relate. Thus, income tax is allocated based on the inclusion of the income (determined under the principles of this paragraph (b)) to which the tax relates. For example, if a calendar-year domestic corporation has $100 of foreign source dividend income (determined in accordance with United States tax accounting principles but without taking this paragraph (b) into account) that is passive income for purposes of section 904, and $60 of the income is allocated under this paragraph (b) to the period of the calendar year after it becomes a member of a consolidated group, then 60% of the corporation's deemed paid foreign tax credit associated with its dividend income for the calendar year is taken into account in computing the group's passive basket consolidated foreign tax credit. Similarly, property taxes relate to the ownership of property and are allocated over the period that the property is owned. This paragraph (b)(2)(iv) applies without regard to any determination or allocation by another taxing jurisdiction.

(v) *Acquisition of S corporation.* If a corporation is acquired in a transaction to which paragraph (b)(1)(ii)(A)(*2*) of this section applies, then paragraphs (b)(2)(ii) and (iii) of this section do not apply and items of income, gain, loss, deduction, and credit are assigned to each short taxable year on the basis of the corporation's normal method of accounting as determined under section 446. This paragraph (b)(2)(v) applies to transactions occurring after November 10, 1999.

(vi) *Passthrough entities*—(A) *In general.* If S is a partner in a partnership or an owner of a similar interest with respect to which items of the entity are taken into account by S, S is treated, solely for purposes of determining the year to which the entity's items are allocated under paragraph (b)(2) of this section, as selling or exchanging its entire interest in the entity immediately before S's change in status.

(B) *Treatment as a conduit.* For purposes of this paragraph (b)(2), if a member (together with other members) would be treated under section 318(a)(2) as owning an aggregate of at least 50% of any stock owned by the passthrough entity, the method that is used to determine the inclusion of the entity's items in the consolidated or separate return must be the same method that is used to determine the inclusion of the member's items in the consolidated or separate return.

(C) *Exception for certain foreign entities.* This paragraph (b)(2)(v) does not apply to any foreign corporation generating the deemed inclusion of income, or to any passive foreign investment company generating a deferred tax amount on an excess distribution under section 1291.

(3) *Anti-avoidance rule.* If any person acts with a principal purpose contrary to the purposes of this paragraph (b), to substantially reduce the Federal income tax liability of any person, adjustments must be made as necessary to carry out the purposes of this section.

(4) *Determination of due date for separate return.* Paragraph (c) of this section contains rules for the filing of the separate return referred to in this paragraph (b). In applying paragraph (c) of this section, the due date for the

filing of S's separate return shall also be determined without regard to the ending of the tax year under paragraph (b)(1)(ii) of this section or the deemed cessation of its existence under paragraph (b)(2)(i) of this section.

(5) *Examples.* For purposes of the examples in this paragraph (b), unless otherwise stated, P and X are common parents of calendar-year consolidated groups, P owns all of the only class of T's stock, T owns no stock of lower-tier members, all persons use the accrual method of accounting, the facts set forth the only corporate activity, all transactions are between unrelated persons, tax liabilities are disregarded, and any election required under paragraph (b)(2) of this section is properly made. The principles of this paragraph (b) are illustrated by the following examples.

Example 1. Items allocated between consolidated and separate returns. (a) *Facts.* P and S are the only members of the P group. P sells all of S's stock to individual A on June 30, and therefore S becomes a nonmember on July 1 of Year 2.

(b) *Analysis.* Under paragraph (b)(1) of this section, the P group's consolidated return for Year 2 includes P's income for the entire tax year and S's income for the period from January 1 to June 30, and S must file a separate return for the period from July 1 to December 31.

(c) *Acquisition of another subsidiary before end of tax year.* The facts are the same as in paragraph (a) of this *Example 1,* except that on July 31 P acquires all the stock of T (which filed a separate return for its year ending on November 30 of Year 1) and T therefore becomes a member on August 1 of Year 2. Under §1.1502–75(d) and paragraph (b)(1) of this section, the P group's consolidated return for Year 2 includes P's income for the entire year, S's income from January 1 to June 30, and T's income from August 1 to December 31. S must file a separate return that includes its income from July 1 to December 31, and T must file a separate return that includes its income from December 1 of Year 1 to July 31 of Year 2. (If P had acquired T after December 31, the P group that included S is a different group from the P group that includes T, and, for example, the P group that includes T must make a separate election under section 1501 and §1.1502–75 if consolidated returns are to be filed.)

Example 2. Group structure change. (a) *Facts.* P owns all of the stock of S and T. Shortly after the beginning of Year 1, P merges into T in a reorganization described in section 368(a)(1)(A) (and in section 368(a)(1)(D)), and P's shareholders receive T's stock in exchange for all of P's stock. The P group is treated under §1.1502–75(d)(2)(ii) as remaining in existence with T as its common parent.

(b) *Analysis.* Under paragraph (b)(1) of this section, the P group's return must include the common parent's items for the entire consolidated return year and, if the common parent ceases to be the common parent but the group remains in existence, appropriate adjustments must be made. Consequently, although P did not exist for all of Year 1, P's items for the portion of Year 1 ending with the merger are treated as the items of the common parent that must be included in the P group's return for Year 1.

(c) *Reverse acquisition.* Assume instead that X acquires all of P's assets in exchange for more than 50% of X's stock in a reorganization described in section 368(a)(1)(D). The reorganization constitutes a reverse acquisition under §1.1502–75(d)(3), with the X group terminating and the P group surviving with X as its common parent. Consequently, P's items for the portion of Year 1 ending with the acquisition are treated as the items of the common parent that must be included in the P group's return for Year 1, and X's items are treated for purposes of paragraph (b)(1) of this section as the items of a subsidiary included in the P group's return for the portion of Year 1 for which X is a member.

Example 3. Ratable allocation. (a) *Facts.* P sells all of T's stock to X, and T becomes a nonmember on July 1 of Year 1. T engages in the production and sale of merchandise throughout Year 1 and is required to use inventories. The sale is treated as causing T's tax year to end on June 30, and the periods beginning and ending with the sale are treated as two tax years for Federal income tax purposes.

(b) *Analysis.* If ratable allocation under paragraph (b)(2)(ii) of this section is not elected, T must perform an inventory valuation as of the acquisition and also as of the end of Year 1. If ratable allocation is elected, T must perform an inventory valuation only as of the close of Year 1, and T's income from inventory is ratably allocated, along with T's other items that are not extraordinary items, between the P and X consolidated returns.

(c) *Merger into nonmember.* Assume instead that T merges into a wholly owned subsidiary of X in a reorganization described in section 368(a)(2)(D), and P receives 10% of X's stock in exchange for all of T's stock. Under paragraph (b)(2)(ii)(B) of this section, because T's tax year ends on June 30 under section 381(b)(1), T's original year determined without taking paragraph (b) of this section into account also ends on June 30. Consequently, a ratable allocation under paragraph (b)(2)(ii) of this section is the same as an allocation based on closing the books.

Example 4. Net operating loss. P sells all of T's stock to X, T becomes a nonmember on June 30 of Year 1, and ratable allocation under paragraph (b)(2)(ii) of this section is elected. Under ratable allocation, the X group has a $100 consolidated net operating loss for Year 1, all of which is attributable to T. However, because of extraordinary items, T has $100 of income for the portion of Year 1 that T is a member of the P group. Under paragraph (b)(2)(ii)(B)(*2*) of this section, T's loss may be carried back from the X group to the portion of Year 1 that T was a member of the P group. See also section 172 and § 1.1502–21(b). Under paragraph (b)(2)(ii)(C)(*5*) of this section, any item carried to or from any portion of the original year is an extraordinary item, and the loss therefore is not taken into account again in determining the ratable allocation under paragraph (b)(2)(ii) of this section.

Example 5. Employee benefit plans. (a) *Facts.* P sells all of T's stock to X, and T becomes a nonmember on June 30 of Year 1. On March 15 of Year 2, T contributes $100 to its retirement plan, which is a qualified plan under section 401(a). T is not required to make quarterly contributions to the plan for Year 1 under section 412(m). The contribution is made on account of T's taxable period beginning on July 1 of Year 1, and is deemed in accordance with section 404(a)(6) to have been made on the last day of T's taxable period beginning on July 1 of Year 1. Ratable allocation under paragraph (b)(2)(ii) of this section is not elected.

(b) *Analysis.* Under paragraph (b) of this section, the sale is treated as causing T's tax year to end on June 30, and the period beginning on July 1 is treated as a separate annual accounting period for all Federal income tax purposes. T's income from January 1 to June 30 is included in the P group's Year 1 return, and T's income from July 1 to December 31 is included in the X group's Year 1 return. Thus, the $100 contribution is deductible by T for the period of Year 1 that it is a member of the X group, subject to the applicable limitations of section 404, if a contribution on the last day of that period would otherwise be deductible.

(c) The facts are the same as in paragraph (a) of this *Example 5,* except that, in accordance with section 404(a)(6), $40 of the $100 contribution is made on account of T's taxable period beginning on January 1 of Year 1 and is deemed to be made on the last day of T's taxable period beginning on January 1 of Year 1. The remaining $60 is made on account of T's taxable period beginning on July 1 of Year 1 and is deemed to be made on the last day of T's taxable period beginning on July 1 of Year 1. As in paragraph (b) of this *Example 5,* under paragraph (b) of this section, the sale is treated as causing T's tax year to end on June 30, and the period beginning on July 1 is treated as a separate annual accounting period for all Federal income tax purposes. The $40 portion of the contribution is deductible by T for the period of Year 1 that it is a member of the P group, subject to the applicable limitations of section 404 and provided that a $40 contribution on the last day of that period would otherwise be deductible for that period, and the $60 portion is deductible by T for the period of Year 1 that it is a member of the X group, subject to the same conditions.

(d) *Ratable allocation.* The facts are the same as in paragraph (a) of this *Example 5,* except that P, T, and X elect ratable allocation under paragraph (b)(2)(ii) of this section and T's deduction for the retirement plan contribution is not an extraordinary item. T's deduction may be ratably allocated, subject to the applicable limitations of section 404, and is allowable only if a contribution on the last day of Year 1 otherwise would be deductible for any period in the year. (The results would be the same if S were an unaffiliated corporation when acquired by X, and the due date of its last separate return (including extensions) were before the pension contribution was made on March 15 of Year 2.)

Example 6. Allocation of partnership items. (a) *Facts.* P sells all of T's stock to X, and T becomes a nonmember on June 30 of Year 1. T has a 10% interest in the capital and profits of a calendar-year partnership.

(b) *Analysis.* Under paragraph (b)(2)(vi)(A) of this section, T is treated, solely for purposes of determining T's tax year in which the partnership's items are included, as selling or exchanging its entire interest in the partnership as of P's sale of T's stock. Thus, the deemed disposition is not taken into account under section 708, it does not result in gain or loss being recognized by T, and T's holding period is unaffected. However, under section 706(a), in determining T's income, T is required to include its distributive share of partnership items for the partnership's year ending within or with T's tax year. Under section 706(c)(2), the partnership's tax year is treated as closing with respect to T for this purpose as of P's sale of T's stock. The allocation of T's distributive share of partnership items must be made under § 1.706–1(c)(2)(ii).

(c) *Controlled partnership.* The facts are the same as in paragraph (a) of this *Example 6,* except that T has a 75% interest in the capital and profits of the partnership. Under paragraph (b)(2)(vi)(B) of this section, T's distributive share of the partnership items is treated as T's items for purposes of paragraph (b)(2) of this section. Thus, if ratable allocation under paragraph (b)(2)(ii) of this section is not elected, T's distributive share of the partnership's items must be determined under § 1.706–1(c)(2)(ii) by an interim closing of the partnership's books. Similarly, if ratable allocation is elected for T's items

that are not extraordinary items, T's distributive share of the partnership's nonextraordinary items must also be ratably allocated under § 1.706–1(c)(2)(ii).

Example 7. Acquisition of S corporation. (a) *Facts.* Z is a small business corporation for which an election under section 1362(a) was in effect at all times since Year 1. At all times, Z had only 100 shares of stock outstanding, all of which were owned by individual A. On July 1 of Year 3, P acquired all of the Z stock. P does not make an election under section 338(g) with respect to its purchase of the Z stock.

(b) *Analysis.* As a result of P's acquisition of the Z stock, Z's election under section 1362(a) terminates. See sections 1361(b)(1)(B) and 1362(d)(2). Z is required to join in the filing of the P consolidated return. See § 1.1502–75. Z's tax year ends for all Federal income tax purposes on June 30 of Year 3. If no extension of time is sought, Z must file a separate return for the period from January 1 through June 30 of Year 3 on or before March 15 of Year 4. See paragraph (b)(4) of this section. Z will become a member of the P consolidated group as of July 1 of Year 3. See paragraph (b)(1)(ii)(A)(*2*) of this section. P group's Year 3 consolidated return will include Z's items from July 1 to December 31 of Year 3.

(6) *Effective date*—(i) *General rule.* Except as provided in paragraphs (b)(1)(ii)(A)(2) and (b)(2)(v) of this section, this paragraph (b) applies to corporations becoming or ceasing to be members of consolidated groups on or after January 1, 1995.

(ii) *Prior law.* For prior transactions, see prior regulations under section 1502 as in effect with respect to the transaction. See, e.g., § 1.1502–76(b) and (d) as contained in the 26 CFR part 1 edition revised as of April 1, 1994. However, § 1.1502–76(b)(5) and (6) as contained in the 26 CFR part 1 edition revised as of April 1, 1994 do not apply with respect to corporations becoming or ceasing to be members of consolidated groups on or after January 1, 1995. If both this paragraph (b) and prior law may apply to determine the inclusion of any amount in a return, appropriate adjustments must be made to prevent the omission or duplication of the amount.

(c) *Time for making separate returns for periods not included in consolidated return*—(1) *Consolidated return filed by due date for separate return.* If the group has filed a consolidated return on or before the due date for the filing of a subsidiary's separate return (including extensions of time and determined without regard to any change of its taxable year required under paragraph (a) of this section), then the separate return for any portion of the subsidiary's taxable year for which its income is not included in the consolidated return of the group must be filed no later than the due date of such consolidated return (including extensions of time).

(2) *Consolidated return not filed by due date for separate return.* If the group has not filed a consolidated return on or before the due date for the filing of a subsidiary corporation's separate return (including extensions of time and determined without regard to any change of its taxable year required under paragraph (a) of this section), then on or before such due date such subsidiary shall file a separate return either for the portion of its taxable year for which its income would not be included in a consolidated return if such a return were filed, or for its complete taxable year. However, if a separate return is filed for such portion of its taxable year and the group subsequently does not file a consolidated return, such subsidiary corporation shall file a substituted return for its complete taxable year not later than the due date (including extensions of time) prescribed for the filing of the common parent's return. On the other hand, if the return is filed for the subsidiary's complete taxable year and the group later files a consolidated return, such subsidiary must file an amended return not later than the due date (including extensions of time) for the filing of the consolidated return of the group. Such amended return shall be for that portion of such subsidiary's taxable year which is not included in the consolidated return. If, under this subparagraph, a substituted return must be filed, then the return previously filed shall not be considered a return within the meaning of section 6011. If, under this subparagraph, a substituted or amended return must be filed, then, for purposes of sections 6513(a) and 6601(a), the last date prescribed for payment of tax shall be the due date (not including extensions of time) for the filing of the subsidiary's separate return (determined without regard to this subparagraph and without regard to any

change of its taxable year required under paragraph (a) of this section).

(3) *Examples.* The provisions of this paragraph may be illustrated by the following examples:

Example (1). Corporation P, which filed a separate return for the calendar year 1966, acquires all of the stock of corporation S as of the close of December 31, 1966. Corporation S reports its income on the basis of a fiscal year ending March 31. On June 15, 1967, the due date for the filing of a separate return by S (assuming no extensions of time), a consolidated return has not been filed for the group (P and S). On such date S may either file a return for the period April 1, 1966, through December 31, 1966, or it may file a return for the complete fiscal year ending March 31, 1967. If S files a return for the short period ending December 31, 1966, and if the group elects not to file a consolidated return for the calendar year 1967, S, on or before March 15, 1968 (the due date of P's return, assuming no extensions of time), must file a substituted return for the complete fiscal year ending March 31, 1967, in lieu of the return previously filed for the short period. Interest is computed from June 15, 1967. If, however, S files a return for the complete fiscal year ending March 31, 1967, and the group elects to file a consolidated return for the calendar year 1967, then S must file an amended return covering the period from April 1, 1966, through December 31, 1966, in lieu of the return previously filed for the complete fiscal year. Interest is computed from June 15, 1967.

Example (2). Assume the same facts as in example (1) except that corporation P acquires all of the stock of corporation S at the close of September 30, 1967, and that P files a consolidated return for the group for 1967 on March 15, 1968 (not having obtained any extensions of time). Since a consolidated return has been filed on or before the due date (June 15, 1968) for the filing of the separate return for the taxable year ending March 31, 1968, the return of S for the short taxable year beginning April 1, 1967, and ending September 30, 1967, should be filed no later than March 15, 1968.

[T.D. 6894, 31 FR 11794, Sept. 8, 1966, as amended by T.D. 7244, 37 FR 28897, Dec. 30, 1972; T.D. 7246, 38 FR 766, Jan. 4, 1973; T.D. 8560, 59 FR 41700, Aug. 15, 1994; T.D. 8560, 62 FR 12098, Mar. 14, 1997; T.D. 8842, 64 FR 61205, Nov. 10, 1999; T.D. 8858, 65 FR 1237, Jan. 7, 2000; T.D. 8940, 66 FR 9929, 9957, Feb. 13, 2001; T.D. 9192, 70 FR 14411, Mar. 22, 2005]

§ 1.1502–77 Agent for the group.

(a) *Scope of agency*—(1) *In general*—(i) *Common parent.* Except as provided in paragraphs (a)(3) and (6) of this section, the common parent (or a substitute agent described in paragraph (a)(1)(ii) of this section) for a consolidated return year is the sole agent (agent for the group) that is authorized to act in its own name with respect to all matters relating to the tax liability for that consolidated return year, for—

(A) Each member in the group; and

(B) Any successor (see paragraph (a)(1)(iii) of this section) of a member.

(ii) *Substitute agents.* For purposes of this section, any corporation designated as a substitute agent pursuant to paragraph (d) of this section to replace the common parent or a previously designated substitute agent acts as agent for the group to the same extent and subject to the same limitations as are applicable to the common parent, and any reference in this section to the common parent includes any such substitute agent.

(iii) *Successor.* For purposes of this section only, the term *successor* means an individual or entity (including a disregarded entity) that is primarily liable, pursuant to applicable law (including, for example, by operation of a state or Federal merger statute), for the tax liability of a member of the group. Such determination is made without regard to § 1.1502–1(f)(4) or 1.1502–6(a). (For inclusion of a successor in references to a subsidiary or member, see paragraph (c)(2) of this section.)

(iv) *Disregarded entity.* If a subsidiary of a group becomes, or its successor is or becomes, a disregarded entity for Federal tax purposes, the common parent continues to serve as the agent with respect to that subsidiary's tax liability under § 1.1502–6 for consolidated return years during which it was included in the group, even though the entity generally is not treated as a person separate from its owner for Federal tax purposes.

(v) *Transferee liability.* For purposes of assessing, paying and collecting transferee liability, any exercise of or reliance on the common parent's agency authority pursuant to this section is binding on a transferee (or subsequent transferees) of a member, regardless of whether the member's existence terminates prior to such exercise or reliance.

(vi) *Purported common parent.* If any corporation files a consolidated return purporting to be the common parent of a consolidated group but is subsequently determined not to have been the common parent of the claimed group, that corporation is treated, to the extent necessary to avoid prejudice to the Commissioner, as if it were the common parent.

(2) *Examples of matters subject to agency.* With respect to any consolidated return year for which it is the common parent—

(i) The common parent makes any election (or similar choice of a permissible option) that is available to a subsidiary in the computation of its separate taxable income, and any change in an election (or similar choice of a permissible option) previously made by or for a subsidiary, including, for example, a request to change a subsidiary's method or period of accounting;

(ii) All correspondence concerning the income tax liability for the consolidated return year is carried on directly with the common parent;

(iii) The common parent files for all extensions of time, including extensions of time for payment of tax under section 6164, and any extension so filed is considered as having been filed by each member;

(iv) The common parent gives waivers, gives bonds, and executes closing agreements, offers in compromise, and all other documents, and any waiver or bond so given, or agreement, offer in compromise, or any other document so executed, is considered as having also been given or executed by each member;

(v) The common parent files claims for refund, and any refund is made directly to and in the name of the common parent and discharges any liability of the Government to any member with respect to such refund;

(vi) The common parent takes any action on behalf of a member of the group with respect to a foreign corporation, for example, elections by, and changes to the method of accounting of, a controlled foreign corporation in accordance with § 1.964–1(c)(3);

(vii) Notices of claim disallowance are mailed only to the common parent, and the mailing to the common parent is considered as a mailing to each member;

(viii) Notices of deficiencies are mailed only to the common parent (except as provided in paragraph (b) of this section), and the mailing to the common parent is considered as a mailing to each member;

(ix) Notices of final partnership administrative adjustment under section 6223 with respect to any partnership in which a member of the group is a partner may be mailed to the common parent, and, if so, the mailing to the common parent is considered as a mailing to each member that is a partner entitled to receive such notice (for other rules regarding partnership proceedings, see paragraphs (a)(3)(v) and (a)(6)(iii) of this section);

(x) The common parent files petitions and conducts proceedings before the United States Tax Court, and any such petition is considered as also having been filed by each member;

(xi) Any assessment of tax may be made in the name of the common parent, and an assessment naming the common parent is considered as an assessment with respect to each member; and

(xii) Notice and demand for payment of taxes is given only to the common parent, and such notice and demand is considered as a notice and demand to each member.

(3) *Matters reserved to subsidiaries.* Except as provided in this paragraph (a)(3) and paragraph (a)(6) of this section, no subsidiary has authority to act for or to represent itself in any matter related to the tax liability for the consolidated return year. The following matters, however, are reserved exclusively to each subsidiary—

(i) The making of the consent required by § 1.1502–75(a)(1);

(ii) Any action with respect to the subsidiary's liability for a federal tax other than the income tax imposed by chapter 1 of the Internal Revenue Code (including, for example, employment taxes under chapters 21 through 25 of the Internal Revenue Code, and miscellaneous excise taxes under chapters 31 through 47 of the Internal Revenue Code);

(iii) The making of an election under section 936(e);

(iv) The making of an election to be treated as a DISC under § 1.992–2; and

(v) Any actions by a subsidiary acting as tax matters partner under sections 6221 through 6234 and the accompanying regulations (but see paragraph (a)(2)(ix) of this section regarding the mailing of a final partnership administrative adjustment to the common parent).

(4) *Term of agency*—(i) *In general.* Except as provided in paragraph (a)(4)(iii) of this section, the common parent for the consolidated return year remains the agent for the group with respect to that year until the common parent's existence terminates, regardless of whether one or more subsidiaries in that year cease to be members of the group, whether the group files a consolidated return for any subsequent year, whether the common parent ceases to be the common parent or a member of the group in any subsequent year, or whether the group continues pursuant to § 1.1502–75(d) with a new common parent in any subsequent year.

(ii) *Replacement of substitute agent designated by Commissioner.* If the Commissioner replaces a previously designated substitute agent pursuant to paragraph (d)(3)(ii) of this section, the replaced substitute agent ceases to be the agent after the Commissioner designates another substitute agent.

(iii) *New common parent after a group structure change.* If the group continues in existence with a new common parent pursuant to § 1.1502–75(d) during a consolidated return year, the common parent at the beginning of the year is the agent for the group through the date of the § 1.1502–75(d) transaction, and the new common parent becomes the agent for the group beginning the day after the transaction, at which time it becomes the agent for the group with respect to the entire consolidated return year (including the period through the date of the transaction) and the former common parent is no longer the agent for that year.

(5) *Identifying members in notice of a lien.* Notwithstanding any other provisions of this paragraph (a), any notice of a lien, any levy or any other proceeding to collect the amount of any assessment, after the assessment has been made, must name the entity from which such collection is to be made.

(6) *Direct dealing with a member*—(i) *Several liability.* The Commissioner may, upon issuing to the common parent written notice that expressly invokes the authority of this provision, deal directly with any member of the group with respect to its liability under § 1.1502–6 for the consolidated tax of the group, in which event such member has sole authority to act for itself with respect to that liability. However, if the Commissioner believes or has reason to believe that the existence of the common parent has terminated, he may, if he deems it advisable, deal directly with any member with respect to that member's liability under § 1.1502–6 without giving the notice required by this provision.

(ii) *Information requests.* The Commissioner may, upon informing the common parent, request information relevant to the consolidated tax liability from any member of the group. However, if the Commissioner believes or has reason to believe that the existence of the common parent has terminated, he may request such information from any member of the group without informing the common parent.

(iii) *Members as partners in partnerships.* The Commissioner generally will deal directly with any member in its capacity as a partner of a partnership that is subject to the provisions of sections 6221 through 6234 and the accompanying regulations (but see paragraph (a)(2)(ix) of this section regarding the mailing of a final partnership administrative adjustment to the common parent). However, if requested to do so in accordance with the provisions of § 301.6223(c)–1(b) of this chapter, the Commissioner may deal with the common parent as agent for such member on any matter related to the partnership, except in regards to a settlement under section 6224(c) and except to the extent the member acts as tax matters partner of the partnership.

(b) *Copy of notice of deficiency to entity that has ceased to be a member of the group.* An entity that ceases to be a member of the group during or after a consolidated return year may file a written notice of that fact with the Commissioner and request a copy of

any notice of deficiency with respect to the tax for a consolidated return year during which the entity was a member, or a copy of any notice and demand for payment of such deficiency, or both. Such filing does not limit the scope of the agency of the common parent provided for in paragraph (a) of this section. Any failure by the Commissioner to comply with such request does not limit an entity's tax liability under § 1.1502–6. For purposes of this paragraph (b), references to an entity include a successor of such entity.

(c) *References to member or subsidiary*. For purposes of this section, all references to a member or subsidiary for a consolidated return year include—

(1) Each corporation that was a member of the group during any part of such year (except that any reference to a subsidiary does not include the common parent);

(2) Except as indicated otherwise, a successor (as defined in paragraph (a)(1)(iii) of this section) of any corporation described in paragraph (c)(1) of this section; and

(3) Each corporation whose income was included in the consolidated return for such year, notwithstanding that the tax liability of such corporation should have been computed on the basis of a separate return, or as a member of another consolidated group, under the provisions of § 1.1502–75.

(d) *Termination of common parent*—(1) *Designation of substitute agent by common parent*. (i) If the common parent's existence terminates, it may designate a substitute agent for the group and notify the Commissioner, as provided in this paragraph (d)(1).

(A) Subject to the Commissioner's approval under paragraph (d)(1)(ii) of this section, before the common parent's existence terminates, the common parent may designate, for each consolidated return year for which it is the common parent and for which the period of limitations either for assessment, for collection after assessment, or for claiming a credit or refund has not expired, one of the following to act as substitute agent in its place—

(*1*) Any corporation that was a member of the group during any part of the consolidated return year and, except as provided in paragraph (e)(3)(ii) of this section, has not subsequently been disregarded as an entity separate from its owner or reclassified as a partnership for Federal tax purposes; or

(*2*) Any successor (as defined in paragraph (a)(1)(iii) of this section) of such a corporation or of the common parent that is a domestic corporation (and, except as provided in paragraph (e)(3)(ii) of this section, is not disregarded as an entity separate from its owner or classified as a partnership for Federal tax purposes), including a corporation that will become a successor at the time that the common parent's existence terminates.

(B) The common parent must notify the Commissioner in writing (under procedures prescribed by the Commissioner) of the designation and provide the following—

(*1*) An agreement executed by the designated corporation agreeing to serve as the group's substitute agent; and

(*2*) If the designated corporation was not itself a member of the group during the consolidated return year (because the designated corporation is a successor of a member of the group for the consolidated return year), a statement by the designated corporation acknowledging that it is or will be primarily liable for the consolidated tax as a successor of a member.

(ii) A designation under paragraph (d)(1)(i)(A) of this section does not apply unless and until it is approved by the Commissioner. The Commissioner's approval of such a designation is not effective before the existence of the common parent terminates.

(2) *Default substitute agent*. If the common parent fails to designate a substitute agent for the group before its existence terminates and if the common parent has a single successor that is a domestic corporation, such successor becomes the substitute agent for the group upon termination of the common parent's existence. However, see paragraph (d)(4) of this section regarding the consequences of the successor's failure to notify the Commissioner of its status as default substitute agent in accordance with procedures established by the Commissioner.

(3) *Designation by the Commissioner.* (i) In the event the common parent's existence terminates and no designation is made and approved under paragraph (d)(1) of this section and the Commissioner believes or has reason to believe that there is no successor of the common parent that satisfies the requirements of paragraph (d)(2) of this section (or the Commissioner believes or has reason to believe there is such a successor but has no last known address on file for such successor), the Commissioner may, at any time, with or without a request from any member of the group, designate a corporation described in paragraph (d)(1)(i)(A) of this section to act as the substitute agent. The Commissioner will notify the designated substitute agent in writing of its designation, and the designation is effective upon receipt by the designated substitute agent of such notice. The designated substitute agent must give notice of the designation to each corporation that was a member of the group during any part of the consolidated return year, but a failure by the designated substitute agent to notify any such member of the group does not invalidate the designation.

(ii) At the request of any member, the Commissioner may, but is not required to, replace a substitute agent previously designated under paragraph (d)(3)(i) of this section with another corporation described in paragraph (d)(1)(i)(A) of this section.

(4) *Absence of designation or notification of default substitute agent.* Until a designation of a substitute agent for the group under paragraph (d)(1) of this section has become effective, the Commissioner has received notification in accordance with procedures established by the Commissioner that a successor qualifying under paragraph (d)(2) of this section has become the substitute agent by default, or the Commissioner has designated a substitute agent under paragraph (d)(3) of this section—

(i) Any notice of deficiency or other communication mailed to the common parent, even if no longer in existence, is considered as having been properly mailed to the agent for the group; and

(ii) The Commissioner is not required to act on any communication (including, for example, a claim for refund) submitted on behalf of the group by any person other than the common parent (including a successor of the common parent qualifying as a default substitute agent under paragraph (d)(2) of this section).

(e) *Termination of a corporation's existence*—(1) *In general.* For purposes of paragraphs (a)(1)(v), (a)(4)(i), and (d) of this section, the existence of a corporation is deemed to terminate if—

(i) Its existence terminates under applicable law; or

(ii) Except as provided in paragraph (e)(3) of this section, it becomes, for Federal tax purposes, either—

(A) An entity that is disregarded as an entity separate from its owner; or

(B) An entity that is reclassified as a partnership.

(2) *Purported agency.* If the existence of the agent for the group terminates under circumstances described in paragraph (e)(1)(ii) of this section, until the Commissioner has approved the designation of a substitute agent for the group pursuant to paragraph (d)(1) of this section or the Commissioner designates a substitute agent and notifies the designated substitute agent pursuant to paragraph (d)(3) of this section, any post-termination action by that purported agent on behalf of the group has the same effect, to the extent necessary to avoid prejudice to the Commissioner, as if the agent's corporate existence had not terminated.

(3) *Exceptions where no eligible corporation exists.* (i) For purposes of the common parent's term as agent under paragraph (a)(4)(i) of this section and the term as agent of the substitute agent designated under paragraph (d) of this section, if a corporation either becomes disregarded as an entity separate from its owner or is reclassified as a partnership for Federal tax purposes, its existence is not deemed to terminate if the effect of such termination would be that no corporation remains eligible to serve as the substitute agent for the group's consolidated return year.

(ii) Similarly, for purposes of paragraph (d) of this section, an entity that is either disregarded as an entity separate from its owner or reclassified as a partnership for Federal tax purposes is not precluded from designation as a

substitute agent merely because of such classification if the effect of the inability to make such designation would be that no corporation remains eligible to serve as the substitute agent for the group's consolidated return year.

(iii) Any entity described in paragraphs (e)(3)(i) or (ii) of this section that remains or becomes the agent for the group is treated as a corporation for purposes of this section.

(4) *Exception for section 338 transactions.* Notwithstanding section 338(a)(2), a target corporation for which an election is made under section 338 is not deemed to terminate for purposes of this section.

(f) *Examples.* The following examples illustrate the principles of this section. Unless otherwise indicated, each example addresses the question of which corporation is the proper party to execute a consent to waive the statute of limitations for Years 1 and 2 or the more general question of which corporation may be designated as a substitute agent for the group for Years 1 and 2. In each example, as of January 1 of Year 1, the P group consists of P and its two subsidiaries, S and S–1. P, as the common parent of the P group, files consolidated returns for the P group in Years 1 and 2. On January 1 of Year 1, domestic corporations S–2, U, V, W, W–1, X, Y, Z and Z–1 are not related to P or the members of the P group. All corporations are calendar year taxpayers. For none of the tax years at issue does the Commissioner exercise the authority under paragraph (a)(6) of this section to deal with any member separately. Any surviving corporation in a merger is a successor as described in paragraph (a)(1)(iii) of this section. Any notification to the Commissioner of the designation of the P group's substitute agent also contains a statement signed on behalf of the designated agent that it agrees to act as the group's substitute agent and, in the case of a successor, that it is primarily liable as a successor of a member. The examples are as follows:

Example 1. Disposition of all group members. On December 31 of Year 1, P sells all the stock of S–1 to X. On December 31 of Year 2, P distributes all the stock of S to P's shareholders. P files a separate return for Year 3. Although P is no longer a common parent after Year 2, P remains the agent for the P group for Years 1 and 2. For as long as P remains in existence, only P may execute a waiver of the period of limitations on assessment on behalf of the group for Years 1 and 2.

Example 2. Acquisition of common parent by another group. The facts are the same as in *Example 1,* except on January 1 of Year 3, all of the outstanding stock of P is acquired by Y. P thereafter joins in the Y group consolidated return as a member of Y group. Although P is a member of Y group in Year 3, P remains the agent for the P group for Years 1 and 2. For as long as P remains in existence, only P may execute a waiver of the period of limitations on assessment on behalf of the P group for Years 1 and 2.

Example 3. Merger of common parent—designation of remaining member as substitute agent. On December 31 of Year 1, P sells all the stock of S–1 to X. On July 1 of Year 2, P acquires all the stock of S–2. On November 30 of Year 2, P distributes all the stock of S to P's shareholders. On January 1 of Year 3, P merges into Y corporation. Just before the merger, P notifies the Commissioner in writing of the planned merger and of its designation of S as the substitute agent for the P group for Years 1 and 2. S is the only member that P can designate as the substitute agent for both Years 1 and 2 because it is the only subsidiary that was a member of the P group during part of both years. Although S–2 is the only remaining subsidiary of the P group when P merges into Y, S–2 was a member of the P group only in Year 2. For that reason, S–2 cannot be the substitute agent for the P group for Year 1. Alternatively, P could designate a different substitute agent for each year, selecting S or S–1 as the substitute agent for Year 1, and S or S–2 as the substitute agent for Year 2. P could also designate its successor Y as the substitute agent for both Years 1 and 2.

Example 4. Forward triangular merger of common parent. On January 1 of Year 3, P merges with and into Z–1, a subsidiary of Z, in a forward triangular merger described in section 368(a)(1)(A) and (a)(2)(D). The transaction constitutes a reverse acquisition under § 1.1502–75(d)(3)(i) because P's shareholders receive more than 50% of Z's stock in exchange for all of P's stock. Just before the merger, P notifies the Commissioner in writing of the planned merger and its designation of Z–1, the corporation that will survive the planned merger, as the substitute agent of the P group for Years 1 and 2. Because Z–1 will be P's successor (within the meaning of paragraph (a)(1) of this section) after the planned merger, P may designate Z–1 as the substitute agent for the P group for Years 1 and 2, pursuant to paragraph (d)(1) of this section. Alternatively, P could have designated S or S–1 as the substitute agent for

the P group for Years 1 and 2. Although Z is the new common parent of the P group, which continues pursuant to §1.1502–75(d)(3)(i), P may not designate Z as the substitute agent for Years 1 and 2 because Z was not a member of the group during any part of Years 1 or 2 and is not a successor of P or any other member of P group.

Example 5. Reverse triangular merger of common parent. On March 1 of Year 3, W–1, a subsidiary of W, merges into P, in a reverse triangular merger described in section 368(a)(1)(A) and (a)(2)(E). P survives the merger with W–1. The transaction constitutes a reverse acquisition under §1.1502–75(d)(3)(i) because P's shareholders receive more than 50% of W's stock in exchange for all of P's stock. Under paragraph (a) of this section, P remains the agent for the P group for Years 1 and 2, even though the P group continues with W as its new common parent pursuant to §1.1502–75(d)(3)(i). Because the transaction constitutes a reverse acquisition, the P group is treated as remaining in existence with W as its common parent. Before March 2 of Year 3, P is the agent for the P group for Year 3. Beginning on March 2 of Year 3, W becomes the agent for the P group with respect to all of Year 3 (including the period through March 1) and subsequent consolidated return years. For as long as P remains in existence, P remains the agent of the P group under paragraph (a) of this section for Years 1 and 2, and therefore only P may execute a waiver of the period of limitations on assessment on behalf of the P group for Years 1 and 2.

Example 6. Reverse triangular merger of common parent-subsequent spinoff of common parent. The facts are the same as in *Example 5,* except that on April 1 of Year 4, in a transaction unrelated to the Year 3 reverse acquisition, P distributes the stock of its subsidiaries S and S–1 to W, and W then distributes the stock of P to the W shareholders. Beginning on March 2 of Year 3, W becomes the agent for the P group with respect to Year 3 (including the period through March 1) and subsequent consolidated return years. Although P is no longer a member of the P group after the Year 4 spinoff, P remains the agent for the P group under paragraph (a) of this section for Years 1 and 2. Thus, for as long as P remains in existence, only P may execute a waiver of the period of limitations on assessment on behalf of the P group for Years 1 and 2.

Example 7. Qualified stock purchase and section 338 election. On March 31 of Year 2, V purchases the stock of P in a qualified stock purchase (within the meaning of section 338(d)(3)), and V makes a timely election pursuant to section 338(g) with respect to P. Although section 338(a)(2) provides that P is treated as a new corporation as of the beginning of the day after the acquisition date for purposes of subtitle A, paragraph (e)(4) of this section provides that P's existence is not deemed to terminate for purposes of this section notwithstanding the general rule of section 338(a)(2). Therefore, the election under section 338(g) does not result in a termination of P under paragraph (e) of this section, and new P remains the agent of the P group for Year 1 and the period ending March 31 of Year 2 (short Year 2). For as long as new P remains in existence, only new P may execute a waiver of the period of limitations on assessment on behalf of the P group for Year 1 and short Year 2.

Example 8. Fraudulent conveyance of assets. On March 15 of Year 2, P files a consolidated return that includes the income of S and S–1 for Year 1. On December 1 of Year 2, S–1 transfers assets having a fair market value of $100x to U in exchange for $10x. This transfer of assets for less than fair market value constitutes a fraudulent conveyance under applicable state law. On March 1 of Year 5, P executes a waiver extending to December 31 of Year 6 the period of limitations on assessment with respect to the group's Year 1 consolidated return. On February 1 of Year 6, the Commissioner issues a notice of deficiency to P asserting a deficiency of $30x for the P group's Year 1 consolidated tax liability. P does not file a petition for redetermination in the Tax Court, and the Commissioner makes a timely assessment against the P group. P, S and S–1 are all insolvent and are unable to pay the deficiency. On February 1 of Year 8, the Commissioner sends a notice of transferee liability to U, which does not file a petition in the Tax Court. On August 1 of Year 8, the Commissioner assesses the amount of the P group's deficiency against U. Under section 6901(c), the Commissioner may assess U's transferee liability within one year after the expiration of the period of limitations against the transferor S–1. By operation of section 6213(a) and 6503(a), the issuance of the notice of deficiency to P and the expiration of the 90-day period for filing a petition in the Tax Court have the effect of further extending by 150 days the P group's limitations period on assessment from the previously extended date of December 31 of Year 6 to May 30 of Year 7. Pursuant to paragraph (a)(1)(v) of this section, the waiver executed by P on March 1 of Year 5 to extend the period of limitations on assessment to December 31 of Year 6 and the further extension of the P group's limitations period to May 30 of Year 7 (by operation of sections 6213(a) and 6503(a)) have the derivative effect of extending the period of limitations on assessment of U's transferee liability to May 30 of Year 8. By operation of section 6901(f), the issuance of the notice of transferee liability to U and the expiration of the 90-day period for filing a petition in the Tax Court have the effect of further extending the limitations period on assessment of U's liability as a transferee by 150 days,

from May 30 of Year 8 to October 27 of Year 8. Accordingly, the Commissioner may send a notice of transferee liability to U at any time on or before May 30 of Year 8 and assess the unpaid liability against U at any time on or before October 27 of Year 8. The result would be the same even if S–1 ceased to exist before March 1 of Year 5, the date P executed the waiver.

(g) *Cross-reference.* For further rules applicable to groups that include insolvent financial institutions, see § 301.6402–7 of this chapter.

(h) *Effective date*—(1) *Application*—(i) *In general.* This section applies with respect to taxable years beginning on or after June 28, 2002.

(ii) *Election to apply for prior taxable years.* Notwithstanding paragraphs (h)(1)(i) and (h)(2) of this section, the common parent may elect to apply paragraph (d)(1) of this section in lieu of § 1.1502–77A(d) in designating a substitute agent for taxable years beginning before June 28, 2002. The common parent makes such an election by expressly referring to the election under this paragraph (h)(1)(ii) in notifying the Commissioner of the designation of the substitute agent. Once made, such election applies to any subsequent designation of a substitute agent for the consolidated return year(s) subject to the election.

(2) *Prior law.* For taxable years beginning before June 28, 2002, see § 1.1502–77A.

(i) [Reserved]

(j) *Designation by Commissioner if common parent is treated as a domestic corporation under section 7874 or section 953(d).* [Reserved] For further guidance, see § 1.1502–77T(j).

[T.D. 9002, 67 FR 43540, June 28, 2002, as amended by T.D. 9255, 71 FR 13002, Mar. 14, 2006]

§ 1.1502–77T Agent for the group (temporary).

(a) through (i) [Reserved]. For further guidance see § 1.1502–77(a) through (i).

(j) *Designation by Commissioner if common parent is treated as a domestic corporation under section 7874 or section 953(d)*—(1) *In general.* If the common parent is an entity created or organized under the law of a foreign country and is treated as a domestic corporation by reason of section 7874 (or regulations thereunder) or a section 953(d) election (a Foreign Common Parent), the Commissioner may at any time, with or without a request from any member of the group, designate another member of the group to act as the agent for the group (a Domestic Substitute Agent) for any taxable year for which the due date (without extensions) for filing returns is after March 14, 2006 and the Foreign Common Parent would otherwise be the agent for the group. For each such year, the Domestic Substitute Agent will be the sole agent for the group even though the Foreign Common Parent remains in existence. The Foreign Common Parent ceases to be the agent for the group when the Commissioner's designation of a Domestic Substitute Agent becomes effective. The Commissioner may designate a Domestic Substitute Agent for the term of a single taxable year, multiple years, or on a continuing basis.

(2) *Domestic Substitute Agent.* The Domestic Substitute Agent, by designation or by succession, shall be a domestic corporation described in § 1.1502–77(d)(1)(i)(A) (determined without regard to section 7874, a section 953(d) election, section 269B, or section 1504(d)).

(3) *Designation by the Commissioner.* The Commissioner will notify the Domestic Substitute Agent in writing by mail or faxed transmission of the designation. The Domestic Substitute Agent's designation is effective on the earliest of the 14th day following the date of a mailing, the 4th day following a faxed transmission, or the date the Commissioner receives written confirmation of the designation by a duly authorized officer of the Domestic Substitute Agent (within the meaning of section 6062). The Domestic Substitute Agent must give notice of its designation to the Foreign Common Parent and each corporation that was a member of the group during any part of any consolidated return year for which the Domestic Substitute Agent will be the agent. A failure of the Domestic Substitute Agent to notify the Foreign Common Parent or any member of the group does not invalidate the designation. The Commissioner will send a copy of the notification to the Foreign

Common Parent, and if applicable, to any Domestic Substitute Agent the designation replaces; a failure to send a copy of the notification does not invalidate the designation.

(4) *Term of agency*—(i) *In general.* If the Commissioner designates a Domestic Substitute Agent for a taxable year, the Domestic Substitute Agent will remain the agent for such year until the group ceases to exist or the Domestic Substitute Agent ceases to exist, ceases to be a member of the group, is replaced by a successor, or is replaced by the Commissioner. This designee remains the agent for such year regardless of whether one or more corporations that were members of the group during any part of such year cease to be members of the group, whether the group files a consolidated return for any subsequent year, or, except as provided by paragraphs (j)(4)(iv)(B) and (j)(4)(v) of this section, whether the group remains in existence with a new common parent in any subsequent year.

(ii) *Agency of Domestic Substitute Agent upon termination of the group.* If the Domestic Substitute Agent is the agent for the group for a year in which the group terminates, the Domestic Substitute Agent shall be the agent for that taxable year (and any prior taxable year for which it is the agent for the group) so long as the Domestic Substitute Agent continues its corporate existence unless it is replaced by a successor or a new designee by the Commissioner.

(iii) *Replacement of §1.1502–77(d)(1) agent.* If, pursuant to §1.1502–77(d)(1), the common parent of the group designates a Foreign Common Parent as the agent for the group for any taxable year, the Commissioner may, at any time, designate a Domestic Substitute Agent to replace the Foreign Common Parent, even if the Commissioner approved the terminating common parent's designation.

(iv) *Group continues with a new common parent*—(A) *Year the new common parent becomes the common parent.* If subsequent to a transaction to which section 7874 applies or a section 953(d) election, the group remains in existence with a new common parent and such new common parent is a domestic corporation (determined without regard to section 7874, a section 953(d) election, or section 269B), such new common parent will become the agent for the group with respect to the entire consolidated return year (including the portion of the year preceding the date on which the new common parent became the common parent)) and the former Domestic Substitute Agent will no longer be the agent for the group for any part of that year.

(B) *Years preceding the year the new common parent becomes the common parent.* If after the Commissioner's designation of a Domestic Substitute Agent the group remains in existence with a new common parent, and such new common parent is a domestic corporation (determined without regard to section 7874, a section 953(d) election, or section 269B), the Commissioner may designate the new common parent as the agent for the group for any of the group's prior taxable years (for which the due date (without extensions) for filing returns is after March 14, 2006) in which the new common parent was a member of the group. For this purpose, the new common parent is treated as having been a member of the group for any taxable year it is primarily liable for the group's income tax liability.

(v) *Replacement of Domestic Substitute Agent by the Commissioner.* The Commissioner may at any time, with or without a request from any member of the group, designate a replacement for a Domestic Substitute Agent (or a successor to such agent).

(5) *Deemed §1.1502–77(d) designation*—(i) *Section 1.1502–78 adjustments.* If the Commissioner designates a Domestic Substitute Agent under this paragraph (j), it will be treated as a designation of a substitute agent under §1.1502–77(d) for the purposes of §1.1502–78.

(ii) *Default Substitute Agent.* If the Domestic Substitute Agent goes out of existence and has a single successor that is eligible to be a Domestic Substitute Agent, such successor becomes the Domestic Substitute Agent and is treated as a default substitute agent under

§ 1.1502–77(d)(2). See § 1.1502–77(d)(4) regarding the consequences of the successor's failure to notify the Commissioner of its status as a default substitute agent. The default substitute agent shall use procedures in section 9 of Rev. Proc. 2002–43 (2002–2 C.B. 99) or a corresponding provision of a successor revenue procedure for notification. (See § 601.601(d)(2)(ii) of this chapter.)

(6) *Request that IRS designate a Domestic Substitute Agent*—(i) *Original designation*. If the common parent of the group is a Foreign Common Parent, and the IRS has not designated a Domestic Substitute Agent, one or more members of the group may request the IRS to make a designation for taxable years for which the due date (without extensions) for filing returns is after March 14, 2006. Such request is deemed to be a request under § 1.1502–77(d)(3)(i). Members of the group shall use the procedures in section 10 of Rev. Proc. 2002–43 (2002–2 C.B. 99) or a corresponding provision of a successor revenue procedure for this purpose. (See § 601.601(d)(2)(ii) of this chapter.)

(ii) *Request that IRS replace a previously designated substitute agent*. If the IRS designates a Domestic Substitute Agent pursuant to this paragraph (j), one or more members of the group may request that the IRS replace the designated Domestic Substitute Agent with another member (or successor to another member). Such a request is deemed to be a request pursuant to § 1.1502–77(d)(3)(ii). Members of the group shall use the procedures in section 11 of Rev. Proc. 2002–43 (2002–2 C.B. 99) or a corresponding provision of a successor revenue procedure for this purpose. (See § 601.601(d)(2)(ii) of this chapter.)

(7) *Effective date*. This paragraph (j) applies to taxable years for which the due date (without extensions) for filing returns is after March 14, 2006. The applicability of this paragraph (j) expires on or before March 9, 2009.

[T.D. 9255, 71 FR 13002, Mar. 14, 2006]

§ 1.1502–78 Tentative carryback adjustments.

(a) *General rule*. If a group has a consolidated net operating loss, a consolidated net capital loss, or a consolidated unused business credit for any taxable year, then any application under section 6411 for a tentative carryback adjustment of the taxes for a consolidated return year or years preceding such year shall be made by the common parent corporation for the carryback year (or substitute agent designated under § 1.1502–77(d) for the carryback year) to the extent such loss or unused business credit is not apportioned to a corporation for a separate return year pursuant to § 1.1502–21(b), 1.1502–22(b), or 1.1502–79(c). In the case of the portion of a consolidated net operating loss or consolidated net capital loss or consolidated unused business credit to which the preceding sentence does not apply and that is to be carried back to a corporation that was not a member of a consolidated group in the carryback year, the corporation to which such loss or credit is attributable shall make any application under section 6411. In the case of a net capital loss or net operating loss or unused business credit arising in a separate return year that may be carried back to a consolidated return year, after taking into account the application of § 1.1502–21(b)(3)(ii)(B) with respect to any net operating loss arising in another consolidated group, the common parent for the carryback year (or substitute agent designated under § 1.1502–77(d) for the carryback year) shall make any application under section 6411.

(b) *Special rules*—(1) *Payment of refund*. Any refund allowable under an application referred to in paragraph (a) of this section shall be made directly to and in the name of the corporation filing the application, except that in all cases where a loss is deducted from the consolidated taxable income or a credit is allowed in computing the consolidated tax liability for a consolidated return year, any refund shall be made directly to and in the name of the common parent corporation for the carryback year (or substitute agent designated under § 1.1502–77(d) for the carryback year). The payment of any such refund shall discharge any liability of the Government with respect to such refund.

(2) *Several liability*. If a group filed a consolidated return for a taxable year

for which there was an adjustment by reason of an application under section 6411, and if a deficiency is assessed against such group under section 6213(b)(3), then each member of such group shall be severally liable for such deficiency including any interest or penalty assessed in connection with such deficiency.

(3) *Groups that include insolvent financial institutions.* For further rules applicable to groups that include insolvent financial institutions, see § 301.6402–7 of this chapter.

(c) *Examples.* The provisions of paragraphs (a) and (b) of this section may be illustrated by the following examples:

Example (1). Corporations P, S, and S–1 filed a consolidated return for the calendar year 1966. P, S, and S–1 also filed a consolidated return for the calendar year 1969. The group incurred a consolidated net operating loss in 1969 attributable to S–1 which may be carried back to 1966 as a consolidated net operating loss carryback. If a tentative carryback adjustment is desired, P, the common parent for the carryback year, must file an application under section 6411 and any refund will be made to P.

Example (2). Assume the same facts as in example (1) except that P, S, and S–1 filed separate returns for the calendar year 1969, even though they were members of the same group for such year. P incurred a net operating loss in 1969 which may be carried back to 1966. If a tentative carryback adjustment is desired, P must file an application under section 6411 and any refund from such application will be made to P.

Example (3). Corporations X, Y, and Z filed a consolidated return for the calendar year 1966. Z ceased to be a member of the group in 1967. Z filed a separate return for 1968 while X and Y filed a consolidated return for such year. The group incurred a consolidated net operating loss in 1968 attributable to Y, which may be carried back to 1966. Z also incurred a net operating loss for 1968 which may be carried back to 1966. If a tentative carryback adjustment is claimed with respect to the consolidated net operating loss, X, the common parent, must file an application under section 6411. If a tentative carryback adjustment is desired with respect to Z's loss, X must file an application. Any refunds attributable to either application will be made to X. If an assessment is made under section 6213(b)(3) to recover an excessive tentative allowance made with respect to calendar year 1966, X, Y, and Z are severally liable for such assessment.

Example (4). Corporations L and M filed a consolidated return for the calendar year 1966. Corporation N filed a separate return for such year. Later, N became a member of the group and filed a consolidated return with the group for the calendar year 1968. The group incurred a consolidated net operating loss in 1968 attributable to N which may be carried back to N's separate return for 1966. If a tentative carryback adjustment is desired, N must file an application under section 6411 and any refund will be made directly to N.

(d) *Adjustments of overpayments of estimated income tax.* If a group paid its estimated income tax on a consolidated basis, then any application under section 6425 for an adjustment of overpayment of estimated income tax shall be made by the common parent corporation. If the members of a group paid estimated income taxes on a separate basis, then any application under section 6425 shall be made by the member of the group which claims an overpayment on a separate basis. Any refund allowable under an application under section 6425 shall be made directly to and in the name of the corporation filing the application.

(e) *Time for filing application*—(1) *General rule.* The provisions of section 6411(a) apply to the filing of an application for a tentative carryback adjustment by a consolidated group.

(2) *Special rule for new members*—(i) *New member.* A new member is a corporation that, in the preceding taxable year, did not qualify as a member, as defined in § 1.1502–1(b), of the consolidated group that it now joins.

(ii) *End of taxable year.* Solely for the purpose of complying with the twelve-month requirement for making an application for a tentative carryback adjustment under section 6411(a), the separate return year of a qualified new member shall be treated as ending on the same date as the end of the current taxable year of the consolidated group that the qualified new member joins.

(iii) *Qualified new member.* A new member of a consolidated group qualifies for purposes of the provisions of this paragraph (e)(2) if, immediately prior to becoming a new member, either—

(A) It was the common parent of a consolidated group; or

(B) It was not required to join in the filing of a consolidated return.

(iv) *Examples.* The provisions of this paragraph (e)(2) may be illustrated by the following examples:

Example 1. Individual A owns 100 percent of the stock of X, a corporation that is not a member of a consolidated group and files separate tax returns on a calendar year basis. On January 31 of year 1, X becomes a member of the Y consolidated group, which also files returns on a calendar year basis. X is a qualified new member as defined in paragraph (e)(2)(iii)(B) of this section because, immediately prior to becoming a new member of the Y consolidated group, X was not required to join in the filing of a consolidated return. As a result of its becoming a new member of Group Y, X's separate return for the short taxable year (January 1 of year 1 through January 31 of year 1) is due September 15 of year 2 (with extensions). See §1.1502–76(c). Group Y's consolidated return is also due September 15 of year 2 (with extensions). See §1.1502–76(c). Solely for the purpose of complying with the twelve-month requirement for making an application for a tentative carryback adjustment under section 6411(a), X's taxable year for the separate return year is treated as ending on December 31 of year 1. X's application for a tentative carryback adjustment is therefore due on or before December 31 of year 2.

Example 2. Assume the same facts as in *Example 1* except that immediately prior to becoming a new member of Group Y, X was a member of the Z consolidated group. Because X was required to join in the filing of the consolidated return for Group Z, X is not a qualified new member as defined in paragraph (e)(2)(iii) of this section. X's items for the one-month period will be included in the consolidated return for Group Z. Group Z's application for a tentative carryback adjustment, if any, continues to be due within 12 months of the end of its taxable year, which is not affected by X's change in status as a new member of Group Y.

(f) *Effective date*—(1) *In general.* This section applies to taxable years to which a loss or credit may be carried back and for which the due date (without extensions) of the original return is after June 28, 2002, except that the provisions of paragraph (e)(2) apply for applications by new members of consolidated groups for tentative carryback adjustments resulting from net operating losses, net capital losses, or unused business credits arising in separate return years of new members that begin on or after January 1, 2001.

(2) *Prior law.* For taxable years to which a loss or credit may be carried back and for which the due date (without extensions) of the original return is on or before June 28, 2002, *see* §1.1502–78 in effect prior to June 28, 2002, as contained in 26 CFR part 1 revised April 1, 2002.

[T.D. 6894, 31 FR 11794, Sept. 3, 1966, as amended by T.D. 7059, 35 FR 14546, Sept. 17, 1970; T.D. 7246, 38 FR 767, Jan. 4, 1973; T.D. 8387, 56 FR 67489, Dec. 31, 1991; T.D. 8446, 57 FR 53034, Nov. 6, 1992; T.D. 8677, 61 FR 33324, June 27, 1996; T.D. 8823, 64 FR 36100, July 2, 1999; T.D. 8950, 66 FR 33463, June 22, 2001; T.D. 9002, 67 FR 43544, June 28, 2002; 67 FR 77678, Dec. 19, 2002]

§1.1502–79 Separate return years.

(a) *Carryover and carryback of consolidated net operating losses to separate return years.* For losses arising in consolidated return years beginning before January 1, 1997, see §1.1502–79A(a). For later years, see §1.1502–21(b).

(b) *Carryover and carryback of consolidated net capital loss to separate return years.* For losses arising in consolidated return years beginning before January 1, 1997, see §1.1502–79A(b). For later years, see §1.1502–22(b).

(c) *Carryover and carryback of consolidated unused investment credit to separate return years*—(1) *In general.* If a consolidated unused investment credit can be carried under the principles of section 46(b) and paragraph (b) of §1.1502–3 to a separate return year of a corporation (or could have been so carried if such corporation were in existence) which was a member of the group in the year in which such unused credit arose, then the portion of such consolidated unused credit attributable to such corporation (as determined under subparagraph (2) of this paragraph) shall be apportioned to such corporation (and any successor to such corporation in a transaction to which section 381(a) applies) under the principles of §1.1502–21(b) (or §§1.1502–79A(a)(1) and (2), as appropriate) and shall be an investment credit carryover or carryback to such separate return year.

(2) *Portion of consolidated unused investment credit attributable to a member*—(i) *Investment credit carryback.* In the case of a consolidated unused credit which is an investment credit carryback, the portion of such consolidated unused credit attributable to a member of the group is an amount

equal to such consolidated unused credit multiplied by a fraction, the numerator of which is the credit earned of such member for the consolidated unused credit year, and the denominator of which is the consolidated credit earned for such unused credit year.

(ii) *Investment credit carryover.* In the case of a consolidated unused credit which is an investment credit carryover, the portion of such consolidated unused credit attributable to a member of the group is an amount equal to such consolidated unused credit multiplied by a fraction, the numerator of which is the credit earned with respect to any section 38 property placed in service in the consolidated unused credit year and owned by such member (whether or not placed in service by such member) at the close of the last day as of which the taxable income of such member is included in a consolidated return filed by the group, and the denominator of which is the consolidated credit earned for such unused credit year.

(d) *Carryover and carryback of consolidated unused foreign tax*—(1) *In general.* If a consolidated unused foreign tax can be carried under the principles of section 904(d) and paragraph (e) of §1.1502–4 to a separate return year of a corporation (or could have been so carried if such corporation were in existence) which was a member of the group in the year in which such unused foreign tax arose, then the portion of such consolidated unused foreign tax attributable to such corporation (as determined under subparagraph (2) of this paragraph) shall be apportioned to such corporation (and any successor to such corporation in a transaction to which section 381(a) applies) under the principles of §1.1502–21(b) (or §§1.1502–79A(a)(1) and (2), as appropriate) and shall be deemed paid or accrued in such separate return year to the extent provided in section 904(d).

(2) *Portion of consolidated unused foreign tax attributable to a member.* The portion of a consolidated unused foreign tax for any year attributable to a member of a group is an amount equal to such consolidated unused foreign tax multipled by a fraction, the numerator of which is the foreign taxes paid or accrued for such year (including those taxes deemed paid or accrued, other than by reason of section 904(d)) to each foreign country or possession (or to all foreign countries or possessions if the overall limitation is effective) by such member, and the denominator of which is the aggregate of all such taxes paid or accrued for such year (including those taxes deemed paid or accrued, other than by reason of section 904(d)) to each such foreign country or possession (or to all foreign countries or possessions if the overall limitation is effective) by all the members of the group.

(e) *Carryover of consolidated excess charitable contributions to separate return years*—(1) *In general.* If the consolidated excess charitable contributions for any taxable year can be carried under the principles of section 170(b)(2) and paragraph (b) of §1.1502–24 to a separate return year of a corporation (or could have been so carried if such corporation were in existence) which was a member of the group in the year in which such excess contributions arose, then the portion of such consolidated excess charitable contributions attributable to such corporation (as determined under subparagraph (2) of this paragraph) shall be apportioned to such corporation (and any successor to such corporation in a transaction to which section 381(a) applies) under the principles of §1.1502–21(b) (or §§1.1502–79A(a)(1) and (2), as appropriate) and shall be a charitable contribution carryover to such separate return year.

(2) *Portion of consolidated excess charitable contributions attributable to a member.* The portion of the consolidated excess charitable contributions attributable to a member of a group is an amount equal to such consolidated excess contributions multiplied by a fraction, the numerator of which is the charitable contributions paid by such member for the taxable year, and the denominator of which is the aggregate of all such charitable contributions

paid for such year by all the members of the group.

[T.D. 6894, 31 FR 11794, Sept. 8, 1966, as amended by T.D. 7728, 45 FR 72650, Nov. 3, 1980; T.D. 8294, 55 FR 9438, Mar. 14, 1990; T.D. 8319, 55 FR 49038, Nov. 26, 1990; T.D. 8364, 56 FR 47402, Sept. 19, 1991; T.D. 8597, 60 FR 36710, July 18, 1995; T.D. 8677, 61 FR 33324, 33325, 33334, June 27, 1996; T.D. 8823, 64 FR 36100, July 2, 1999]

§ 1.1502–80 Applicability of other provisions of law.

(a) *In general.* The Internal Revenue Code, or other law, shall be applicable to the group to the extent the regulations do not exclude its application. Thus, for example, in a transaction to which section 381(a) applies, the acquiring corporation will succeed to the tax attributes described in section 381(c). Furthermore, sections 269 and 482 apply for any consolidated year. Section 304 applies except as provided in paragraph (b) of this section.

(b) *Non-applicability of section 304.* Section 304 does not apply to any acquisition of stock of a corporation in an intercompany transaction or to any intercompany item from such transaction occurring on or after July 24, 1991.

(c) *Deferral of section 165.* For consolidated return years beginning on or after January 1, 1995, stock of a member is not treated as worthless under section 165 before the stock is treated as disposed of under the principles of § 1.1502–19(c)(1)(iii). See §§ 1.1502–11(d) and 1.1502–35 for additional rules relating to stock loss. For further guidance, see § 1.1502–80T(c).

(d) *Non-applicability of section 357(c)*—(1) *In general.* Section 357(c) does not apply to any transaction to which § 1.1502–13, § 1.1502–13T, § 1.1502–14, or § 1.1502–14T applies, if it occurs in a consolidated return year beginning on or after January 1, 1995. For example, P, S, and T are members of a consolidated group, P owns all of the stock of S and T with bases of $30 and $20, respectively, S has a $30 basis in its assets and $40 of liabilities, and S merges into T in a transaction described in section 368(a)(1)(A) (and in section 368(a)(1)(D)); section 357(c) does not apply to the merger, P's basis in T's stock increases to $50 ($30 plus $20), and T succeeds to S's $30 basis in the assets transferred subject to the $40 liability. Similarly, if S instead transferred its assets and liabilities to a newly formed subsidiary in a transaction to which section 351 applies, section 357(c) does not apply and S's basis in the subsidiary's stock is a $10 excess loss account. This paragraph (d) does not apply to a transaction if the transferor or transferee becomes a nonmember as part of the same plan or arrangement. The transferor (or transferee) is treated as becoming a nonmember once it is no longer a member of a consolidated group that includes the transferee (or transferor). For purposes of this paragraph (d), any reference to a transferor or transferee includes, as the context may require, a reference to a successor or predecessor.

(2) *Prior period transactions.* If, in a tax year beginning before January 1, 1995, a member's stock with an excess loss account is transferred in a transaction to which § 1.1502–13, § 1.1502–13T, § 1.1502–14, or § 1.1502–14T applies, paragraph (d)(1) of this section applies to the stock transfer to the extent that the income, gain, deduction, or loss (if any) is not taken into account in a tax year beginning before January 1, 1995. For example, if P, S, and T, are members of a consolidated group, T's stock has an excess loss account, and P transfers the T stock to S in 1993 in a transaction to which section 351 and § 1.1502–13 apply, section 357(c) applies to the transfer only to the extent P's gain is taken into account in tax years beginning before January 1, 1995.

(e) *Non-applicability of section 163(e)(5).* Section 163(e)(5) does not apply to any intercompany obligation (within the meaning of § 1.1502–13(g)) issued in a consolidated return year beginning on or after July 12, 1995.

(f) *Non-applicability of section 1031.* Section 1031 does not apply to any intercompany transaction occurring in consolidated return years beginning on or after July 12, 1995.

[T.D. 8402, 57 FR 9385, Mar. 18, 1992, as amended by T.D. 8560, 59 FR 41703, Aug. 15, 1994; T.D. 8597, 60 FR 36710, July 18, 1995; T.D. 8677, 61 FR 33325, June 27, 1996; T.D. 8597, 62 FR 12098, Mar. 14, 1997; T.D. 9048, 68 FR 12291, Mar. 14, 2003; T.D. 9118, 69 FR 12801, Mar. 18, 2004; T.D. 9192, 70 FR 14411, Mar. 22, 2005; T.D. 9254, 71 FR 13018, Mar. 14, 2006]

§ 1.1502–80T Applicability of other provisions of law (temporary).

(a) and (b) [Reserved]. For further guidance, see § 1.1502–80(a) and (b).

(c) *Deferral of section 165.* Stock of a member is not treated as worthless under section 165 before the stock is treated as disposed of under the principles of § 1.1502–19(c)(1)(iii). If stock of a member would otherwise be treated as worthless under the principles of section 165, then, notwithstanding the previous sentence, such stock may be treated as worthless under section 165 immediately prior to the time such member ceases to be a member of the group. See §§ 1.1502–11(d) and 1.1502–35 for additional rules relating to stock loss. This paragraph (c) applies to taxable years beginning after March 18, 2004 and before March 19, 2007. Taxpayers, however, may apply this paragraph (c) to taxable years beginning on or after January 1, 1995 and before March 18, 2004; otherwise, paragraph (c) of § 1.1502–80 as contained in 26 CFR part 1 edition revised as of April 1, 2003, shall apply to taxable years beginning on or after January 1, 1995, and on or before March 18, 2004.

(d) through (f) [Reserved]. For further guidance, see § 1.1502–80(d) through (f).

[T.D. 9118, 69 FR 12801, Mar. 18, 2004, as amended by T.D. 9192, 70 FR 14411, Mar. 22, 2005; T.D. 9254, 71 FR 13018, Mar. 14, 2006]

§ 1.1502–81T Alaska Native Corporations.

(a) *General Rule.* The application of section 60(b)(5) of the Tax Reform Act of 1984 and section 1804(e)(4) of the Tax Reform Act of 1986 (relating to Native Corporations established under the Alaska Native Claims Settlement Act (43 U.S.C. 1601 *et seq.*)) is limited to the use on a consolidated return of losses and credits of a Native Corporation, and of a corporation all of whose stock is owned directly by a Native Corporation, during any taxable year (beginning after the effective date of such sections and before 1992), or any part thereof, against the income and tax liability of a corporation affiliated with the Native Corporation. Thus, no other tax saving, tax benefit, or tax loss is intended to result from the application of section 60(b)(5) of the Tax Reform Act of 1984 and section 1804(e)(4) of the Tax Reform Act of 1986 to any person (whether or not such person is a member of an affiliated group of which a Native Corporation is the common parent). In particular, except as approved by the Secretary, no positive adjustment under § 1.1502–32(b) will be made with respect to the basis of stock of a corporation that is affiliated with a Native Corporation through application of section 60(b)(5) of the Tax Reform Act of 1984 and section 1804(e)(4) of the Tax Reform Act of 1986.

(b) *Effective Dates.* This section applies to taxable years beginning after December 31, 1984.

[T.D. 8130, 52 FR 8448, Mar. 18, 1987, as amended by T.D. 8560, 59 FR 41675, Aug. 15, 1994]

§ 1.1502–90 Table of contents.

The following list contains the major headings in §§ 1.1502-91 through 1.1502–99:

§ 1.1502–91 Application of section 382 with respect to a consolidated group.

(a) Determination and effect of an ownership change.
(1) In general.
(2) Special rule for post-change year that includes the change date.
(3) Cross-reference.
(b) Definitions and nomenclature.
(c) Loss group.
(1) Defined.
(2) Coordination with rule that ends separate tracking.
(3) Example.
(d) Loss subgroup.
(1) Net operating loss carryovers.
(2) Net unrealized built-in loss.
(3) Loss subgroup parent.
(4) Election to treat loss subgroup parent requirement as satisfied.
(5) Principal purpose of avoiding a limitation.
(6) Special rules.
(7) Examples.
(e) Pre-change consolidated attribute.
(1) Defined.
(2) Example.
(f) Pre-change subgroup attribute.
(1) Defined.
(2) Example.
(g) Net unrealized built-in gain and loss.
(1) In general.
(2) Members included.
(i) Consolidated group with a net operating loss.
(ii) Determination whether a consolidated group has a net unrealized built-in loss.

(iii) Loss subgroup with net operating loss carryovers.

(iv) Determination whether subgroup has a net unrealized built-in loss.

(v) Separate determination of section 382 limitation for recognized built-in losses and net operating losses.

(3) Coordination with rule that ends separate tracking.

(4) Acquisitions of built-in gain or loss assets.

(5) Indirect ownership.

(6) Common parent not common parent for five years.

(h) Recognized built-in gain or loss.

(1) In general. [Reserved]

(2) Disposition of stock or an intercompany obligation of a member.

(3) Intercompany transactions.

(4) Exchanged basis property.

(i) [Reserved]

(j) Predecessor and successor corporations.

§ 1.1502–92 Ownership change of a loss group or a loss subgroup.

(a) Scope.

(b) Determination of an ownership change.

(1) Parent change method.

(i) Loss group.

(ii) Loss subgroup.

(iii) Special rule if election regarding section 1504(a)(1) relationship is made.

(2) Examples.

(3) Special adjustments.

(i) Common parent succeeded by a new common parent.

(ii) Newly created loss subgroup parent.

(iii) Examples.

(4) End of separate tracking of certain losses.

(c) Supplemental rules for determining ownership change.

(1) Scope.

(2) Cause for applying supplemental rule.

(3) Operating rules.

(4) Supplemental ownership change rules.

(i) Additional testing dates for the common parent (or loss subgroup parent).

(ii) Treatment of subsidiary stock as stock of the common parent (or loss subgroup parent).

(iii) Different testing periods.

(iv) Disaffiliation of a subsidiary.

(v) Subsidiary stock acquired first.

(vi) Anti-duplication rule.

(5) Examples.

(d) Testing period following ownership change under this section.

(e) Information statements.

(1) Common parent of a loss group.

(2) Abbreviated statement with respect to loss subgroups.

§ 1.1502–93 Consolidated section 382 limitation (or subgroup section 382 limitation).

(a) Determination of the consolidated section 382 limitation (or subgroup section 382 limitation).

(1) In general.

(2) Coordination with apportionment rule.

(b) Value of the loss group (or loss subgroup).

(1) Stock value immediately before ownership change.

(2) Adjustment to value.

(i) In general.

(ii) Anti-duplication.

(3) Examples.

(c) Recognized built-in gain of a loss group or loss subgroup.

(1) In general.

(2) Adjustments.

(d) Continuity of business.

(1) In general.

(2) Example.

(e) Limitations of losses under other rules.

§ 1.1502–94 Coordination with section 382 and the regulations thereunder when a corporation becomes a member of a consolidated group.

(a) Scope.

(1) In general.

(2) Successor corporation as new loss member.

(3) Coordination in the case of a loss subgroup.

(4) End of separate tracking of certain losses.

(5) Cross-reference.

(b) Application of section 382 to a new loss member.

(1) In general.

(2) Adjustment to value.

(3) Pre-change separate attribute defined.

(4) Examples.

(c) Built-in gains and losses.

(d) Information statements.

§ 1.1502–95 Rules on ceasing to be a member of a consolidated group (or loss subgroup).

(a) In general.

(1) Consolidated group.

(2) Election by common parent.

(3) Coordination with §§ 1.1502–91 through 1.1502–93.

(b) Separate application of section 382 when a member leaves a consolidated group.

(1) In general.

(2) Effect of a prior ownership change of the group.

(3) Application in the case of a loss subgroup.

(4) Examples.

(c) Apportionment of a consolidated section 382 limitation.

(1) In general.

(2) Amount which may be apportioned.

(i) Consolidated section 382 limitation.

(ii) Net unrealized built-in gain.
(3) Effect of apportionment on the consolidated group.
(i) Consolidated section 382 limitation.
(ii) Net unrealized built-in gain.
(4) Effect on corporations to which an apportionment is made.
(i) Consolidated section 382 limitation.
(ii) Net unrealized built-in gain.
(5) Deemed apportionment when loss group terminates.
(6) Appropriate adjustments when former member leaves during the year.
(7) Examples.
(d) Rules pertaining to ceasing to be a member of a loss subgroup.
(1) In general.
(2) Exceptions.
(3) Examples.
(e) Allocation of net unrealized built-in loss.
(1) In general.
(2) Amount of allocation.
(i) In general.
(ii) Transferred basis property and deferred gain or loss.
(iii) Assets for which gain or loss has been recognized.
(iv) Exchanged basis property.
(v) Two or more members depart during the same year.
(vi) Anti-abuse rule.
(3) Effect of the allocation on the consolidated group.
(4) Effect on corporations to which the allocation is made.
(5) Subgroup principles.
(6) Apportionment of consolidated section 382 limitation (or subgroup section 382 limitation).
(i) In general.
(ii) Special rule for former members that become members of the same consolidated group.
(7) Examples.
(8) Reporting requirement.
(f) Filing the election to apportion the section 382 limitation and net unrealized built-in gain.
(1) Form of the election to apportion.
Signing of the election.
(3) Filing of the election.
(4) Revocation of election.

§ 1.1502–96 Miscellaneous rules.

(a) End of separate tracking of losses.
(1) Application.
(2) Effect of end of separate tracking.
(i) Net operating loss carryovers.
(ii) Net unrealized built-in losses.
(iii) Common parent not common parent for five years.
(3) Continuing effect of end of separate tracking.
(i) In general.
(ii) Example.
(4) Special rule for testing period.
(5) Limits on effects of end of separate tracking.
(b) Ownership change of subsidiary.
(1) Ownership change of a subsidiary because of options or plan or arrangement.
(2) Effect of the ownership change.
(i) In general.
(ii) Pre-change losses.
(3) Coordination with §§ 1.1502–91, 1.1502–92, and 1.1502–94.
(4) Example.
(c) Continuing effect of an ownership change.
(d) Losses reattributed under § 1.1502–20(g).
(1) In general.
(2) Deemed section 381(a) transaction.
(3) Rules relating to owner shifts.
(i) In general.
(ii) Examples.
(4) Rules relating to the section 382 limitation.
(i) Reattributed loss is a pre-change separate attribute of a new loss member.
(ii) Reattributed loss is a pre-change subgroup attribute.
(iii) Potential application of section 382(l)(1).
(iv) Duplication or omission of value.
(v) Special rule for continuity of business requirement.
(5) Election to reattribute section 382 limitation.
(i) Effect of election.
(ii) Examples.
(e) Time and manner of making election under § 1.1502–91(d)(4).
(1) In general.
(2) Election statement.

§ 1.1502–97 Special rules under section 382 for members under the jurisdiction of a court in a title 11 or similar case. [Reserved]

§ 1.1502–98 Coordination with section 383.

§ 1.1502–99 Effective dates.

(a) Effective date.
(b) Special rules.
(1) Election to treat subgroup parent requirement as satisfied.
(2) Principal purpose of avoiding a limitation.
(3) Ceasing to be a member of a loss subgroup.
(i) Ownership change of a loss subgroup.
(ii) Expiration of 5-year period.
(4) Reattribution of net operating loss carryovers under § 1.1502–20(g).
(5) Election to apportion net unrealized built-in gain.
(c) Testing period may include a period beginning before June 25, 1999.
(1) In general.
(2) Transition rule for net unrealized built-in losses.

[T.D. 8824, 64 FR 36128, July 2, 1999]

§ 1.1502–91 Application of section 382 with respect to a consolidated group.

(a) *Determination and effect of an ownership change*—(1) *In general.* This section and §§ 1.1502–92 and 1.1502–93 set forth the rules for determining an ownership change under section 382 for members of consolidated groups and the section 382 limitations with respect to attributes described in paragraphs (e) and (f) of this section. These rules generally provide that an ownership change and the section 382 limitation are determined with respect to these attributes for the group (or loss subgroup) on a single entity basis and not for its members separately. Following an ownership change of a loss group (or a loss subgroup) under § 1.1502–92, the amount of consolidated taxable income for any post-change year which may be offset by pre-change consolidated attributes (or pre-change subgroup attributes) shall not exceed the consolidated section 382 limitation (or subgroup section 382 limitation) for such year as determined under § 1.1502–93.

(2) *Special rule for post-change year that includes the change date.* If the post-change year includes the change date, section 382(b)(3)(A) is applied so that the consolidated section 382 limitation (or subgroup section 382 limitation) does not apply to the portion of consolidated taxable income that is allocable to the period in the year on or before the change date. See generally § 1.382–6 (relating to the allocation of income and loss). The allocation of consolidated taxable income for the post-change year that includes the change date must be made before taking into account any consolidated net operating loss deduction (as defined in § 1.1502–21(a)).

(3) *Cross-reference.* See §§ 1.1502–94 and 1.1502–95 for rules that apply section 382 to a corporation that becomes or ceases to be a member of a group or loss subgroup.

(b) *Definitions and nomenclature.* For purposes of this section and §§ 1.1502–92 through 1.1502–99, unless otherwise stated:

(1) The definitions and nomenclature contained in section 382 and the regulations thereunder (including the nomenclature and assumptions relating to the examples in § 1.382–2T(b)) and this section and §§ 1.1502–92 through 1.1502–99 apply.

(2) In all examples, all groups file consolidated returns, all corporations file their income tax returns on a calendar year basis, the only 5-percent shareholder of a corporation is a public group, the facts set forth the only owner shifts during the testing period, no election is made under paragraph (d)(4) of this section, and each asset of a corporation has a value equal to its adjusted basis.

(3) As the context requires, references to §§ 1.1502–91 through 1.1502–96 include references to corresponding provisions of §§ 1.1502–A through 1.1502–96A. For example, a reference to an ownership change under § 1.1502–92 in § 1.1502–95(b) can include a reference to an ownership change under § 1.1502–92A.

(c) *Loss group*—(1) *Defined.* A loss group is a consolidated group that—

(i) Is entitled to use a net operating loss carryover to the taxable year that did not arise (and is not treated under § 1.1502–21(c) as arising) in a SRLY;

(ii) Has a consolidated net operating loss for the taxable year in which a testing date of the common parent occurs (determined by treating the common parent as a loss corporation); or

(iii) Has a net unrealized built-in loss (determined under paragraph (g) of this section by treating the date on which the determination is made as though it were a change date).

(2) *Coordination with rule that ends separate tracking.* A consolidated group may be a loss group because a member's losses that arose in (or are treated as arising in) a SRLY are treated as described in paragraph (c)(1)(i) of this section. See § 1.1502–96(a).

(3) *Example.* The following example illustrates the principles of this paragraph (c):

Example. Loss group. (i) L and L1 file separate returns and each has a net operating loss carryover arising in Year 1 that is carried over to Year 2. A owns 40 shares and L owns 60 shares of the 100 outstanding shares of L1 stock. At the close of Year 1, L buys the 40 shares of L1 stock from A. For Year 2, L and L1 file a consolidated return. The following is a graphic illustration of these facts:

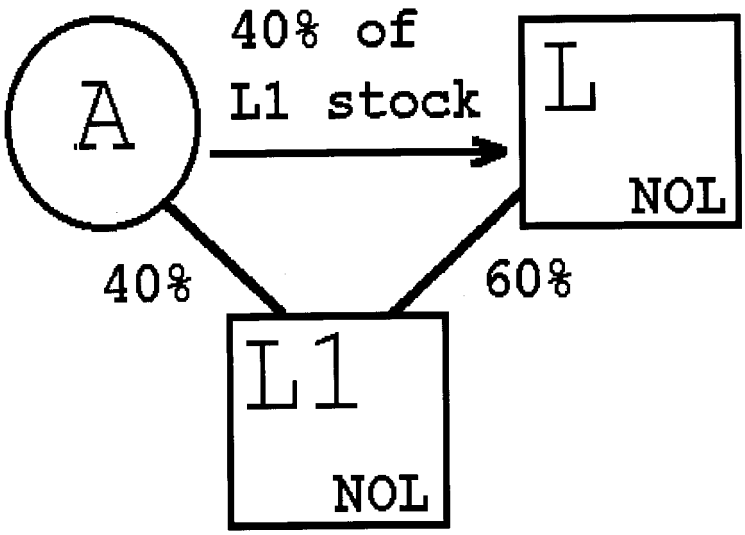

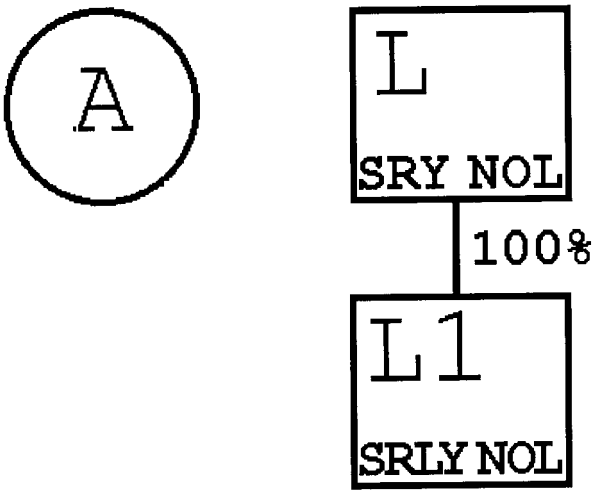

(ii) L and L1 become a loss group at the beginning of Year 2 because the group is entitled to use the Year 1 net operating loss carryover of L, the common parent, which did not arise (and is not treated under § 1.1502–21(c) as arising) in a SRLY. See § 1.1502–94 for rules relating to the application of section 382 with respect to L1's net operating loss

carryover from Year 1 which did arise in a SRLY.

(d) *Loss subgroup*—(1) *Net operating loss carryovers.* Two or more corporations that become members of a consolidated group (the current group) compose a loss subgroup if—

(i) They were affiliated with each other in another group (the former group), whether or not the group was a consolidated group;

(ii) They bear the relationship described in section 1504(a)(1) to each other through a loss subgroup parent immediately after they become members of the current group (or are deemed to bear that relationship as a result of an election described in paragraph (d)(4) of this section); and

(iii) At least one of the members carries over a net operating loss that did not arise (and is not treated under § 1.1502–21(c) as arising) in a SRLY with respect to the former group.

(2) *Net unrealized built-in loss.* Two or more corporations that become members of a consolidated group compose a loss subgroup if they—

(i) Have been continuously affiliated with each other for the 5 consecutive year period ending immediately before they become members of the group;

(ii) Bear the relationship described in section 1504(a)(1) to each other through a loss subgroup parent immediately after they become members of the current group (or are deemed to bear that relationship as a result of an election described in paragraph (d)(4) of this section); and

(iii) Have a net unrealized built-in loss (determined under paragraph (g) of this section on the day they become members of the group by treating that day as though it were a change date).

(3) *Loss subgroup parent.* A loss subgroup parent is the corporation that bears the same relationship to the other members of the loss subgroup as a common parent bears to the members of a group.

(4) *Election to treat loss subgroup parent requirement as satisfied*—(i) *In general.* Solely for purposes of paragraphs (d)(1)(i) and (2)(ii) of this section, two or more corporations that become members of a consolidated group at the same time and that were affiliated with each other immediately before becoming members of the group are deemed to bear a section 1504(a)(1) relationship to each other immediately after they become members of the group if the common parent of that group makes an election under this paragraph (d)(4) with respect to those members. See § 1.1502–96(e) for the time and manner of making the election.

(ii) *Members included.* An election under this paragraph (d)(4) includes all corporations that become members of the current group at the same time and that were affiliated with each other immediately before they become members of the current group.

(iii) *Each member included treated as loss subgroup parent.* If the members to which this election applies are a loss subgroup described in paragraph (d)(1) or (2) of this section, then each member is treated as a loss subgroup parent. See § 1.1502–92(b)(1)(iii) for special rules relating to an ownership change of a loss subgroup if the election under this paragraph (d)(4) is made.

(5) *Principal purpose of avoiding a limitation.* The corporations described in paragraphs (d)(1) or (2) of this section do not compose a loss subgroup if any one of them is formed, acquired, or availed of with a principal purpose of avoiding the application of, or increasing any limitation under, section 382. Instead, § 1.1502–94 applies with respect to the attributes of each such corporation. Any member excluded from a loss subgroup, if excluded with a principal purpose of so avoiding or increasing any section 382 limitation, is treated as included in the loss subgroup. This paragraph (d)(5) does not apply solely because, in connection with becoming members of the group, the members of a group (or loss subgroup) are rearranged (or, in the case of the preceding sentence, are not rearranged) to bear a relationship to the other members described in section 1504(a)(1).

(6) *Special rules.* See § 1.1502–95(d) for rules concerning when a corporation ceases to be a member of a loss subgroup, and for certain exceptions that may apply if a member does not continue to satisfy the loss subgroup parent requirement within the current group. See also § 1.1502–96(a) for a special rule regarding the end of separate tracking of SRLY losses of a member

that has an ownership change or that has been a member of a group for at least 5 consecutive years.

(7) *Examples.* The following examples illustrate the principles of this paragraph (d):

Example 1. Loss subgroup. (i) P owns all the L stock and L owns all the L1 stock. The P group has a consolidated net operating loss arising in Year 1 that is carried to Year 2. On May 2, Year 2, P sells all the stock of L to A, and L and L1 thereafter file consolidated returns. A portion of the Year 1 consolidated net operating loss is apportioned under § 1.1502–21(b) to each of L and L1, which they carry over to Year 2. The following is a graphic illustration of these facts:

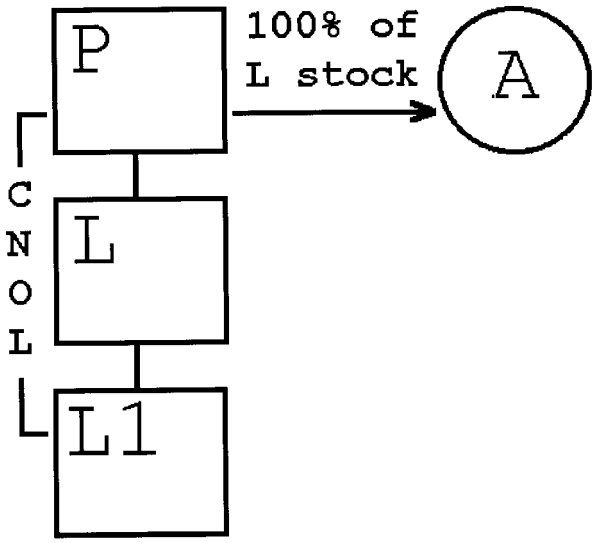

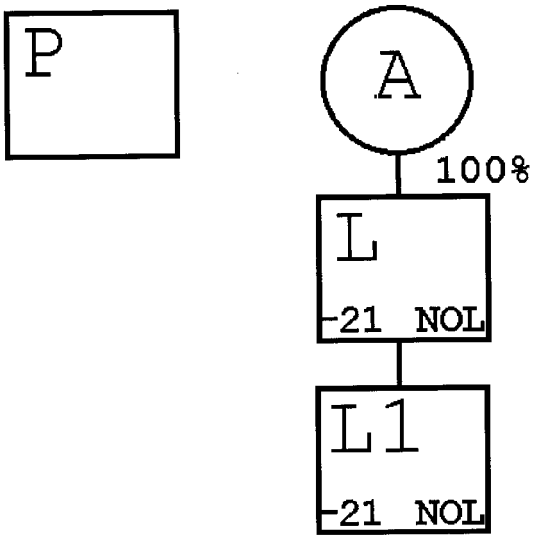

(ii) (a) L and L1 compose a loss subgroup within the meaning of paragraph (d)(1) of this section because—

(A) They were affiliated with each other in the P group (the former group);

(B) They bear a relationship described in section 1504(a)(1) to each other through a

loss subgroup parent (L) immediately after they became members of the L group; and

(C) At least one of the members (here, both L and L1) carries over a net operating loss to the L group (the current group) that did not arise in a SRLY with respect to the P group.

(b) Under paragraph (d)(3) of this section, L is the loss subgroup parent of the L loss subgroup.

Example 2. Loss subgroup—section 1504(a)(1) relationship. (i) P owns all the stock of L and L1. L owns all the stock of L2. L1 and L2 own 40 percent and 60 percent of the stock of L3, respectively. The P group has a consolidated net operating loss arising in Year 1 that is carried over to Year 2. On May 22, Year 2, P sells all the stock of L and L1 to P1, the common parent of another consolidated group. The Year 1 consolidated net operating loss is apportioned under §1.1502–21(b), and each of L, L1, L2, and L3 carries over a portion of such loss to the first consolidated return year of the P1 group ending after the acquisition. The following is a graphic illustration of these facts:

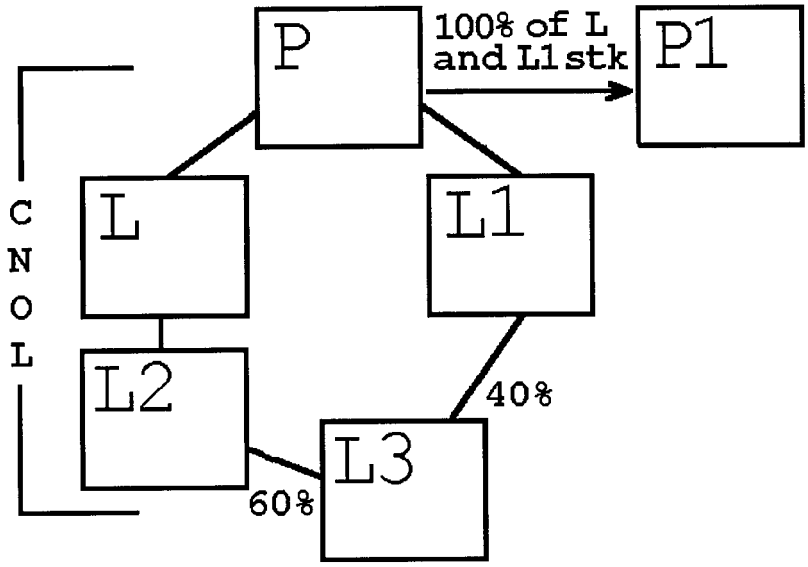

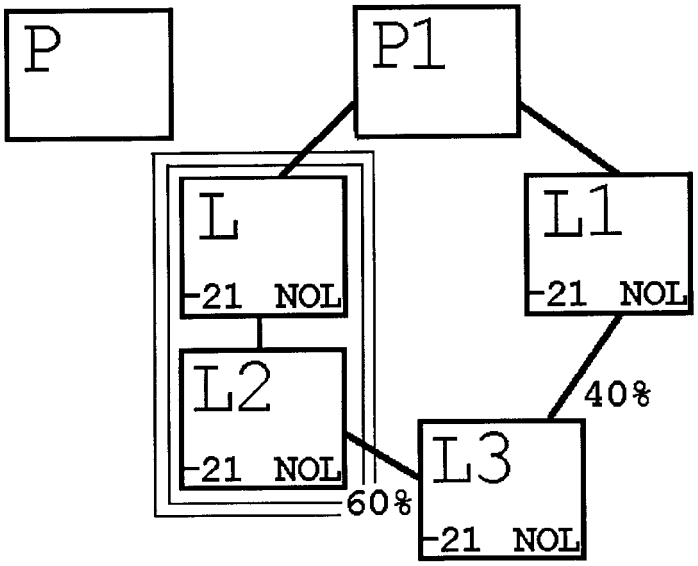

(ii) L and L2 compose a loss subgroup within the meaning of paragraph (d)(1) of this section. Neither L1 nor L3 is included in a loss subgroup because neither bears a relationship described in section 1504(a)(1) through a loss subgroup parent to any other member of the former group immediately after becoming members of the P1 group.

Example 3. Loss subgroup—section 1504(a)(1) relationship. The facts are the same as in *Example 2,* except that the stock of L1 is transferred to L in connection with the sale of the L stock to P1. L, L1, L2, and L3 compose a loss subgroup within the meaning of paragraph (d)(1) of this section because—

(i) They were affiliated with each other in the P group (the former group);

(ii) They bear a relationship described in section 1504(a)(1) to each other through a loss subgroup parent (L) immediately after they become members of the P1 group; and

(iii) At least one of the members (here, each of L, L1, L2, and L3) carries over a net operating loss to the P1 group (the current group).

Example 4. Loss subgroup—elective section 1504(a)(1) relationship. The facts are the same as in *Example 2,* except that P1 makes the election under paragraph (d)(4) of this section. The election includes L, L1, L2, and L3 (even though L and L2 would compose a loss subgroup without regard to the election) because they become members of the current group (the P1 group) at the same time and were affiliated with each other in the P group immediately before they became members of the P1 group. As a result of the election, L, L1, L2, and L3 are treated as satisfying the requirement that they bear the relationship described in section 1504(a)(1) to each other through a loss subgroup parent immediately after they become members of the P1 group. L, L1, L2, and L3 compose a loss subgroup within the meaning of paragraph (d)(1) of this section.

(e) *Pre-change consolidated attribute*—(1) *Defined.* A pre-change consolidated attribute of a loss group is—

(i) Any loss described in paragraph (c)(1)(i) or (ii) of this section (relating to the definition of loss group) that is allocable to the period ending on or before the change date; and

(ii) Any recognized built-in loss of the loss group.

(2) *Example.* The following example illustrates the principle of this paragraph (e):

Example. Pre-change consolidated attribute. (i) The L group has a consolidated net operating loss arising in Year 1 that is carried over to Year 2. The L loss group has an ownership change at the beginning of Year 2.

(ii) The net operating loss carryover of the L loss group from Year 1 is a pre-change consolidated attribute because the L group was entitled to use the loss in Year 2 and therefore the loss was described in paragraph (c)(1)(i) of this section. Under paragraph (a)(2)(i) of this section, the amount of consolidated taxable income of the L group for Year 2 that may be offset by this loss carryover may not exceed the consolidated section 382 limitation of the L group for that year. See § 1.1502–93 for rules relating to the computation of the consolidated section 382 limitation.

(f) *Pre-change subgroup attribute*—(1) *Defined.* A pre-change subgroup attribute of a loss subgroup is—

(i) Any net operating loss carryover described in paragraph (d)(1)(iii) of this section (relating to the definition of loss subgroup); and

(ii) Any recognized built-in loss of the loss subgroup.

(2) *Example.* The following example illustrates the principle of this paragraph (f):

Pre-change subgroup attribute. (i) P is the common parent of a consolidated group. P owns all the stock of L, and L owns all the stock of L1. L2 is not a member of an affiliated group, and has a net operating loss arising in Year 1 that is carried over to Year 2. On December 11, Year 2, L1 acquires all the stock of L2, causing an ownership change of L2. During Year 2, the P group has a consolidated net operating loss that is carried over to Year 3. On November 2, Year 3, M acquires all the L stock from P. M, L, L1, and L2 thereafter file consolidated returns. All of the P group Year 2 consolidated net operating loss is apportioned under § 1.1502–21(b) to L and L2, which they carry over to the M group.

(ii)(a) L, L1, and L2 compose a loss subgroup because—

(1) They were affiliated with each other in the P group (the former group);

(2) They bear a relationship described in section 1504(a)(1) to each other through a loss subgroup parent (L) immediately after they became members of the L group; and

(3) At least one of the members (here, both L and L2) carries over a net operating loss to the M group (the current group) that is described in paragraph (d)(1)(iii) of this section.

(b) For this purpose, L2's loss from Year 1 that was a SRLY loss with respect to the P group (the former group) is described in paragraph (d)(1)(iii) of this section because L2 had an ownership change on becoming a member of the P group (see § 1.1502–96(a)) on December 11, Year 2. Starting on December 12, Year 2, the P group no longer separately tracked owner shifts of the stock of L1 with respect to the Year 1 loss. M's acquisition results in an ownership change of L, and therefore the L loss subgroup under § 1.1502–92(a)(2). See § 1.1502–93 for rules governing the computation of the subgroup section 382 limitation.

(iii) In the M group, L2's Year 1 loss continues to be subject to a section 382 limitation resulting from the ownership change

that occurred on December 11, Year 2. See § 1.1502–96(c).

(g) *Net unrealized built-in gain and loss*—(1) *In general.* The determination whether a consolidated group (or loss subgroup) has a net unrealized built-in gain or loss under section 382(h)(3) is based on the aggregate amount of the separately computed net unrealized built-in gains or losses of each member that is included in the group (or loss subgroup) under paragraph (g)(2) of this section, including items of built-in income and deduction described in section 382(h)(6). Thus, for example, amounts deferred under section 267, or under § 1.1502–13 (other than amounts deferred with respect to the stock of a member (or an intercompany obligation) included in the group (or loss subgroup) under paragraph (g)(2) of this section) are built-in items. The threshold requirement under section 382(h)(3)(B) applies on an aggregate basis and not on a member-by-member basis. The separately computed amount of a member included in a group or loss subgroup does not include any unrealized built-in gain or loss on stock (including stock described in section 1504(a)(4) and § 1.382–2T(f)(18)(ii) and (iii)) of another member included in the group or loss subgroup (or an intercompany obligation). However, a member of a group or loss subgroup includes in its separately computed amount the unrealized built-in gain or loss on stock (but not on an intercompany obligation) of another member not included in the group or loss subgroup. If a member is not included in the determination whether a group (or subgroup) has a net unrealized built-in loss under paragraph (g)(2)(ii) or (iv) of this section, that member is not included in the loss group or loss subgroup. See § 1.1502–94(c) (relating to built-in gain or loss of a new loss member) and § 1.1502–96(a) (relating to the end of separate tracking of certain losses).

(2) *Members included*—(i) *Consolidated group with a net operating loss.* The members included in the determination whether a consolidated group described in paragraph (c)(1)(i) or (ii) of this section (relating to loss groups with net operating losses) has a net unrealized built-in gain are all members of the consolidated group on the day that the determination is made.

(ii) *Determination whether a consolidated group has a net unrealized built-in loss.* The members included in the determination whether a consolidated group is a loss group described in paragraph (c)(1)(iii) of this section are—

(A) The common parent and all other members that have been affiliated with the common parent for the 5 consecutive year period ending on the day that the determination is made;

(B) Any other member that has a net unrealized built-in loss determined under paragraph (g)(1) of this section on the date that the determination is made, and that is neither a new loss member described in § 1.1502–94(a)(1)(ii) nor a member of a loss subgroup described in paragraph (d)(2) of this section;

(C) Any new loss member described in § 1.1502–94(a)(1)(ii) that has a net unrealized built-in gain determined under paragraph (g)(1) of this section on the day that the determination is made; and

(D) The members of a loss subgroup described in paragraph (d)(2) of this section if the members of the subgroup have, in the aggregate, a net unrealized built-in gain on the day that the determination is made.

(iii) *Loss subgroup with net operating loss carryovers.* The members included in the determination whether a loss subgroup described in paragraph (d)(1) of this section (relating to loss subgroups with net operating loss carryovers) has a net unrealized built-in gain are all members of the loss subgroup on the day that the determination is made.

(iv) *Determination whether subgroup has a net unrealized built-in loss.* The members included in the determination whether a subgroup has a net unrealized built-in loss are those members described in paragraphs (d)(2)(i) and (ii) of this section.

(v) *Separate determination of section 382 limitation for recognized built-in losses and net operating losses.* In determining

whether a loss group described in paragraph (c)(1)(i) or (ii) of this section (relating to loss groups that have net operating loss carryovers) has a net unrealized built-in gain which, if recognized, increases the consolidated section 382 limitation, the group includes, under paragraph (g)(2)(i) of this section, all of its members on the day the determination is made. Under paragraph (g)(2)(ii) of this section, however, for purposes of determining whether a group has a net unrealized built-in loss described in paragraph (c)(1)(iii) of this section, not all members of the consolidated group may be included. Thus, a consolidated group may have recognized built-in gains that increase the amount of consolidated taxable income that may be offset by its pre-change net operating loss carryovers that did not arise (and are not treated as arising) in a SRLY, and also may have recognized built-in losses the absorption of which is limited. Similar results may obtain for loss subgroups under paragraphs (g)(2)(iii) and (iv) of this section. See §1.1502–93(c)(2) for rules prohibiting the use of recognized built-in gains to increase the amount of consolidated taxable income that can be offset by recognized built-in losses.

(3) *Coordination with rule that ends separate tracking.* See §1.1502–96(a) for special rules relating to members (or loss subgroups) that have an ownership change within six months before, on, or after becoming a member of the group.

(4) *Acquisitions of built-in gain or loss assets.* A member of a consolidated group (or loss subgroup) may not, in determining its separately computed net unrealized built-in gain or loss, include any gain or loss with respect to assets acquired with a principal purpose to affect the amount of its net unrealized built-in gain or loss. A group (or loss subgroup) may not, in determining its net unrealized built-in gain or loss, include any gain or loss of a member acquired with a principal purpose to affect the amount of its net unrealized built-in gain or loss.

(5) *Indirect ownership.* A member's separately computed net unrealized built-in gain or loss is adjusted to the extent necessary to prevent any duplication of unrealized gain or loss attributable to the member's indirect ownership interest in another member through a nonmember if the member has a 5-percent or greater ownership interest in the nonmember.

(6) *Common parent not common parent for five years.* If the common parent has become the common parent of an existing group within the previous 5 year period in a transaction described in §1.1502–75(d)(2)(ii) or (3), appropriate adjustments must be made in applying paragraph (g)(2)(ii)(A) of this section so that corporations that have not been members of the group for five years are not included. In such a case, references to the common parent in paragraph (g)(2)(ii)(A) of this section are to the former common parent. Thus, members of the group remaining in existence (including the new common parent) that have not been affiliated with the former common parent (or that have not been members of that group) for the five consecutive year period ending on the day that the determination is made are not included under paragraph (g)(2)(ii)(A) of this section. See, however, §1.1502–96(a)(2) for special rules relating to members (or loss subgroups) that have an ownership change within six months before, on, or after the time that the member becomes a member of the group.

(h) *Recognized built-in gain or loss*—(1) *In general.* [Reserved]

(2) *Disposition of stock or an intercompany obligation of a member.* Gain or loss recognized by a member on the disposition of stock (including stock described in section 1504(a)(4) and §1.382–2T(f)(18)(ii) and (iii)) of another member is treated as a recognized gain or loss for purposes of section 382(h)(2) (unless disallowed under §1.337(d)–2, §1.1502–35, or otherwise), even though gain or loss on such stock was not included in the determination of a net unrealized built-in gain or loss under paragraph (g)(1) of this section. Gain or loss recognized by a member with respect to an intercompany obligation is treated as recognized gain or loss only to the extent (if any) the transaction gives rise to aggregate income or loss within the consolidated group.

(3) *Intercompany transactions.* Gain or loss that is deferred under provisions such as section 267 and §1.1502–13 is treated as recognized built-in gain or

loss only to the extent taken into account by the group during the recognition period. See also § 1.1502–13(c)(7) *Example 10.*

(4) *Exchanged basis property.* If the adjusted basis of any asset is determined, directly or indirectly, in whole or in part, by reference to the adjusted basis of another asset held by the member at the beginning of the recognition period, the asset is treated, with appropriate adjustments, as held by the member at the beginning of the recognition period.

(i) [Reserved]

(j) *Predecessor and successor corporations.* A reference in this section and §§ 1.1502–92 through 1.1502–99 to a corporation, member, common parent, loss subgroup parent, or subsidiary includes, as the context may require, a reference to a predecessor or successor corporation as defined in § 1.1502–1(f)(4). For example, the determination whether a successor satisfies the continuous affiliation requirement of paragraph (d)(2)(i) or (g)(2)(ii) of this section is made by reference to its predecessor.

[T.D. 8824, 64 FR 36129, July 2, 1999, as amended by T.D. 9048, 68 FR 12291, Mar. 14, 2003; T.D. 9187, 70 FR 10326, Mar. 3, 2005; T.D. 9254, 71 FR 13018, Mar. 14, 2006]

§ 1.1502–92 Ownership change of a loss group or a loss subgroup.

(a) *Scope.* This section provides rules for determining if there is an ownership change for purposes of section 382 with respect to a loss group or a loss subgroup. See § 1.1502–94 for special rules for determining if there is an ownership change with respect to a new loss member and § 1.1502–96(b) for special rules for determining if there is an ownership change of a subsidiary.

(b) *Determination of an ownership change*—(1) *Parent change method*—(i) *Loss group.* A loss group has an ownership change if the loss group's common parent has an ownership change under section 382 and the regulations thereunder. Solely for purposes of determining whether the common parent has an ownership change—

(A) The losses described in § 1.1502–91(c) are treated as net operating losses (or a net unrealized built-in loss) of the common parent; and

(B) The common parent determines the earliest day that its testing period can begin by reference to only the attributes that make the group a loss group under § 1.1502–91(c).

(ii) *Loss subgroup.* A loss subgroup has an ownership change if the loss subgroup parent has an ownership change under section 382 and the regulations thereunder. The principles of § 1.1502–95(b) (relating to ceasing to be a member of a consolidated group) apply in determining whether the loss subgroup parent has an ownership change. Solely for purposes of determining whether the loss subgroup parent has an ownership change—

(A) The losses described in § 1.1502–91(d) are treated as net operating losses (or a net unrealized built-in loss) of the loss subgroup parent;

(B) The day that the members of the loss subgroup become members of the group (or a loss subgroup) is treated as a testing date within the meaning of § 1.382–2(a)(4); and

(C) The loss subgroup parent determines the earliest day that its testing period can begin under § 1.382–2T(d)(3) by reference to only the attributes that make the members a loss subgroup under § 1.1502–91(d).

(iii) *Special rule if election regarding section 1504(a)(1) relationship is made*—(A) *Ownership change of deemed loss subgroup parent is an ownership change of loss subgroup.* If the common parent makes an election under § 1.1502–91(d)(4), each of the members in the loss subgroup is treated as the loss subgroup parent for purposes of determining whether the loss subgroup has an ownership change under section 382 and the regulations thereunder on or after the day the members become members of the group.

(B) *Exception.* Paragraph (b)(1)(iii)(A) of this section does not apply to cause an ownership change of a loss subgroup if a deemed loss subgroup parent has an ownership change upon (or after) ceasing to be a member of the current group.

(2) *Examples.* The following examples illustrate the principles of this paragraph (b):

Example 1. Loss group—ownership change of the common parent. (i) A owns all the L stock. L owns 80 percent and B owns 20 percent of

the L1 stock. For Year 1, the L group has a consolidated net operating loss that resulted from the operations of L1 and that is carried over to Year 2. The value of the L stock is $1000. The total value of the L1 stock is $600 and the value of the L1 stock held by B is $120. The L group is a loss group under § 1.1502–91(c)(1) because it is entitled to use its net operating loss carryover from Year 1. On August 15, Year 2, A sells 51 percent of the L stock to C. The following is a graphic illustration of these facts:

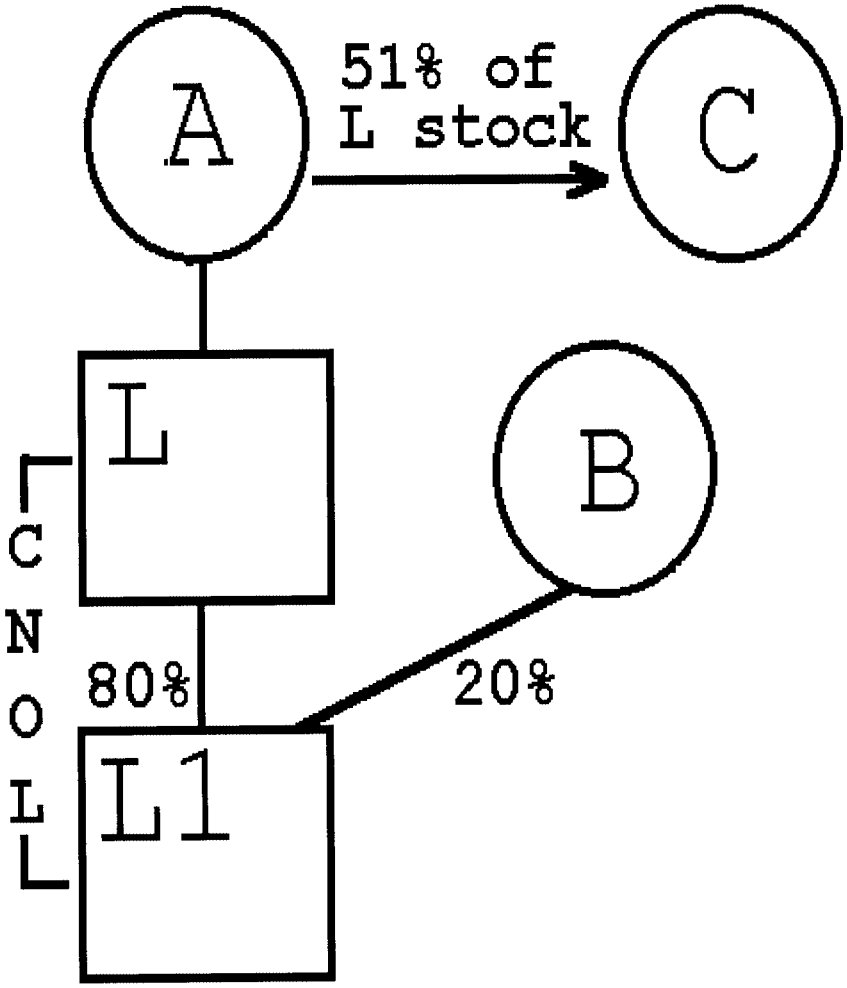

(ii) Under paragraph (b)(1)(i) of this section, section 382 and the regulations thereunder are applied to L to determine whether it (and therefore the L loss group) has an ownership change with respect to its net operating loss carryover from Year 1 attributable to L1 on August 15, Year 2. The sale of the L stock to C causes an ownership change of L under § 1.382–2T and of the L loss group under paragraph (b)(1)(i) of this section. The amount of consolidated taxable income of the L loss group for any post-change taxable year that may be offset by its pre-change consolidated attributes (that is, the

net operating loss carryover from Year 1 attributable to L1) may not exceed the consolidated section 382 limitation for the L loss group for the taxable year.

Example 2. Loss group—owner shifts of subsidiaries disregarded. (i) The facts are the same as in *Example 1,* except that on August 15, Year 2, A sells only 49 percent of the L stock to C and, on December 12, Year 3, in an unrelated transaction, B sells the 20 percent of the L1 stock to D. A's sale of the L stock to C does not cause an ownership change of L under §1.382-2T nor of the L loss group under paragraph (b)(1)(i) of this section. The following is a graphic illustration of these facts:

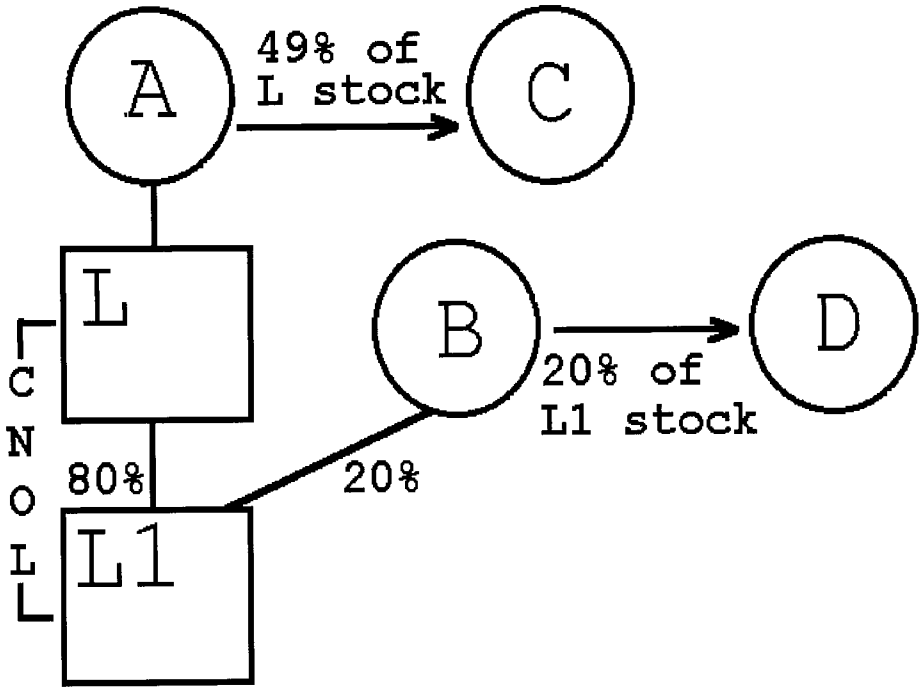

(ii) B's subsequent sale of L1 stock is not taken into account for purposes of determining whether the L loss group has an ownership change under paragraph (b)(1)(i) of this section, and, accordingly, there is no ownership change of the L loss group. See paragraph (c) of this section, however, for a supplemental ownership change method that would apply to cause an ownership change if the purchases by C and D were pursuant to a plan or arrangement and certain other conditions are satisfied.

Example 3. Loss subgroup—ownership change of loss subgroup parent controls. (i) P owns all the L stock. L owns 80 percent and A owns 20 percent of the L1 stock. The P group has a consolidated net operating loss arising in Year 1 that is carried over to Year 2. On September 9, Year 2, P sells 51 percent of the L stock to B, and L1 is apportioned a portion of the Year 1 consolidated net operating loss under §1.1502–21(b), which it carries over to its next taxable year. L and L1 file a consolidated return for their first taxable year ending after the sale to B. The following is a graphic illustration of these facts:

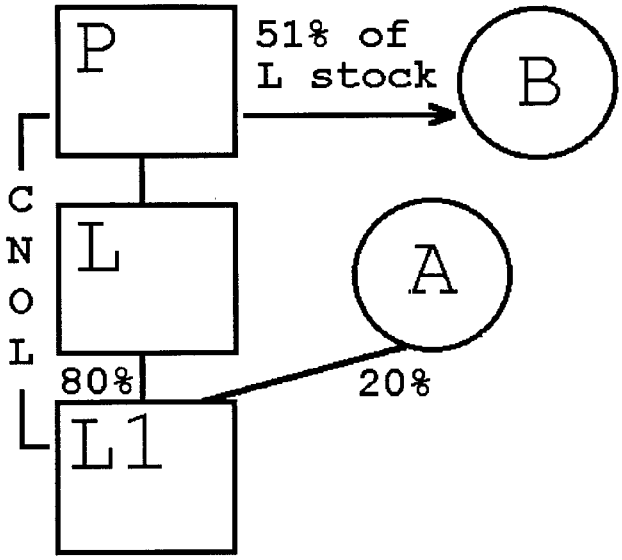

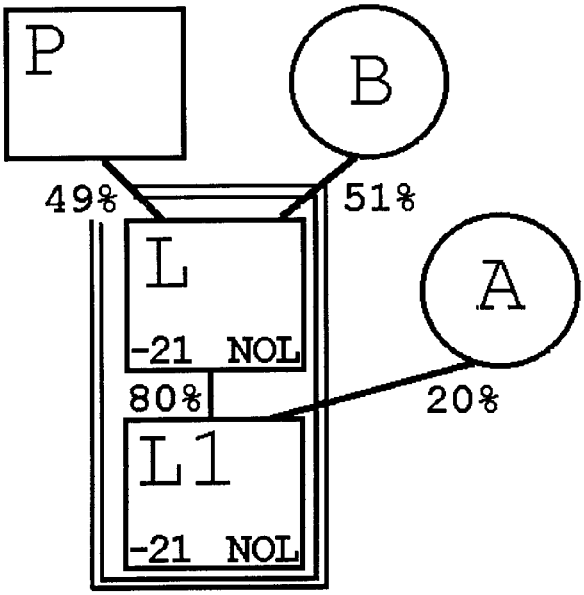

(ii) Under § 1.1502–91(d)(1), L and L1 compose a loss subgroup on September 9, Year 2, the day that they become members of the L group. Under paragraph (b)(1)(ii) of this section, section 382 and the regulations thereunder are applied to L to determine whether it (and therefore the L loss subgroup) has an ownership change with respect to the portion

of the Year 1 consolidated net operating loss that is apportioned to L1 on September 9, Year 2. L has an ownership change resulting from P's sale of 51 percent of the L stock to A. Therefore, the L loss subgroup has an ownership change with respect to that loss.

Example 4. Loss group and loss subgroup—contemporaneous ownership changes. (i) A owns all the stock of corporation M, M owns 35 percent and B owns 65 percent of the L stock, and L owns all the L1 stock. The L group has a consolidated net operating loss arising in Year 1 that is carried over to Year 2. On May 19, Year 2, B sells 45 percent of the L stock to M for cash. M, L, and L1 thereafter file consolidated returns. L and L1 are each apportioned a portion of the Year 1 consolidated net operating loss, which they carry over to the M group's Year 2 and Year 3 consolidated return years. The M group has a consolidated net operating loss arising in Year 2 that is carried over to Year 3. On June 9, Year 3, A sells 70 percent of the M stock to C. The following is a graphic illustration of these facts:

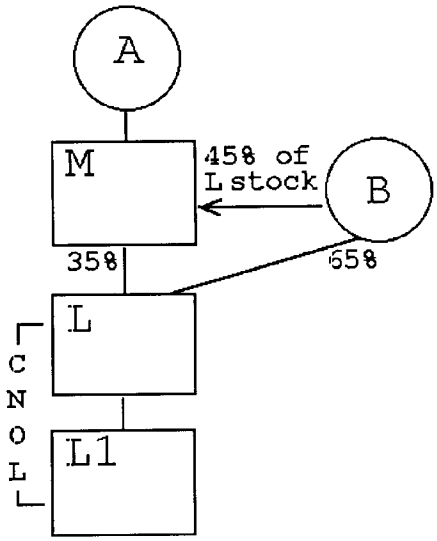

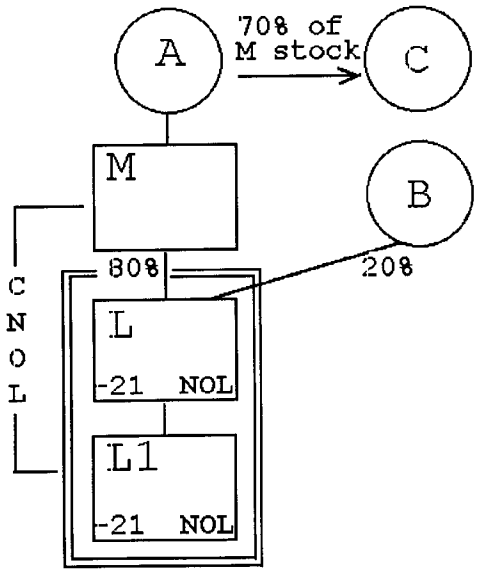

(ii) Under § 1.1502–91(d)(1), L and L1 compose a loss subgroup on May 19, Year 2, the day they become members of the M group. Under paragraph (b)(1)(ii) of this section, section 382 and the regulations thereunder are applied to L to determine whether L (and therefore the L loss subgroup) has an ownership change with respect to the loss

carryovers from Year 1 on May 19, Year 2, a testing date because of B's sale of L stock to M. The sale of L stock to M results in only a 45 percentage point increase in A's ownership of L stock. Thus, there is no ownership change of L (or the L loss subgroup) with respect to those loss carryovers under paragraph (b)(1)(ii) of this section on that day.

(iii) June 9, Year 3, is also a testing date with respect to the L loss subgroup because of A's sale of M stock to C. The sale results in a 56 percentage point increase in C's ownership of L stock, and L has an ownership change. Therefore, the L loss subgroup has an ownership change on that day with respect to the loss carryovers from Year 1.

(iv) Paragraph (b)(1)(i) of this section requires that section 382 and the regulations thereunder be applied to M to determine whether M (and therefore the M loss group) has an ownership change with respect to the net operating loss carryover from Year 2 on June 9, Year 3, a testing date because of A's sale of M stock to C. The sale results in a 70 percentage point increase in C's ownership of M stock, and M has an ownership change. Therefore, the M loss group has an ownership change on that day with respect to that loss carryover.

Example 5—Deemed subgroup parent. (i) P owns all the stock of L and L1 and 80 percent of the stock of T. A owns the remaining 20 percent of the stock of T. L1 owns all the stock of L2. P1, which owns 60 percent of the stock of P, acquires, at the beginning of Year 2, the T, L, and L1 stock owned by P, and T, L, L1, and L2 become members of the P1 group. The P group has a consolidated net operating loss arising in Year 1 that is carried over to Year 2. L, L1, and L2 are each apportioned a portion of the Year 1 consolidated net operating loss under §1.1502–21(b), which they carry over to the P1 group's Year 2 and Year 3 consolidated return years. P1 makes the election described in §1.1502–91(d)(4) to treat T, L, L1 and L2 as meeting the section 1504(a)(1) requirement of §1.1502–91(d)(1)(ii). As a result of the election, T, L, L1 and L2 compose a loss subgroup and T, L, L1, and L2 are each treated as the loss subgroup parent for purposes of this paragraph (b). Because of P1's indirect ownership of T, L, L1, and L2 prior to P1's acquisition of the T, L, and L1 stock, P1's acquisition does not cause an ownership change of the loss subgroup.

(ii) On February 2, Year 3, L1 sells all of the stock of L2 to B. Although L2 is treated as a loss subgroup parent, the determination whether the loss subgroup comprised of T, L, and L1 has an ownership change under this paragraph (b) is made without regard to the sale of L2 because L2's ownership change occurred upon ceasing to be a member of the P1 group. See §1.1502–95(b) to determine the application of section 382 to L2 when L2 ceases to be a member of the P1 group and the T, L, L1 and L2 loss subgroup.

(iii) On March 26, Year 3, A sells her 20 percent minority stock interest in T to C . C's purchase, together with the 32 percentage point owner shift effected by P1's acquisition of the T stock at the beginning of Year 2, causes an ownership change of T, and therefore of the loss subgroup comprised of T, L, and L1.

(3) *Special adjustments*—(i) *Common parent succeeded by a new common parent.* For purposes of determining if a loss group has an ownership change, if the common parent of a loss group is succeeded or acquired by a new common parent and the loss group remains in existence, the new common parent is treated as a continuation of the former common parent with appropriate adjustments to take into account shifts in ownership of the former common parent during the testing period (including shifts that occur incident to the common parent's becoming the former common parent). A new common parent may be a continuation of the former common parent even if, under §1.1502–91(g)(2)(ii), the new common parent is not included in determining whether the group has a net unrealized built-in loss.

(ii) *Newly created loss subgroup parent.* For purposes of determining if a loss subgroup has an ownership change, if the member that is the loss subgroup parent has not been the loss subgroup parent for at least 3 years as of a testing date, appropriate adjustments must be made to take into account owner shifts of members of the loss subgroup so that the structure of the loss subgroup does not have the effect of avoiding an ownership change under section 382. (See paragraph (b)(3)(iii), *Example 3* of this section.)

(iii) *Examples.* The following examples illustrate the principles of this paragraph (b)(3):

Example 1. New common parent acquires old common parent. (i) A, who owns all the L stock, sells 30 percent of the L stock to B on August 26, Year 1. L owns all the L1 stock. The L group has a consolidated net operating loss arising in Year 1 that is carried over to Year 3. On July 16, Year 2, A and B transfer their L stock to a newly created holding company, HC, in exchange for 70 percent and 30 percent, respectively, of the HC stock. HC, L, and L1 thereafter file consolidated returns. Under the principles of §1.1502–75(d),

the L loss group is treated as remaining in existence, with HC taking the place of L as the new common parent of the loss group. The following is a graphic illustration of these facts:

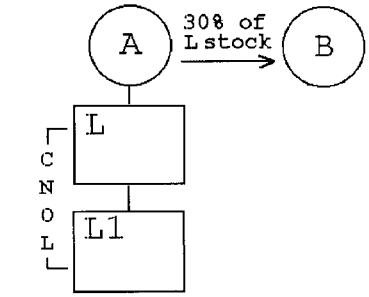

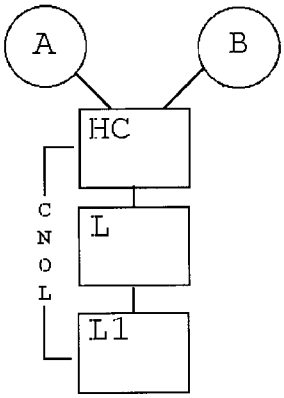

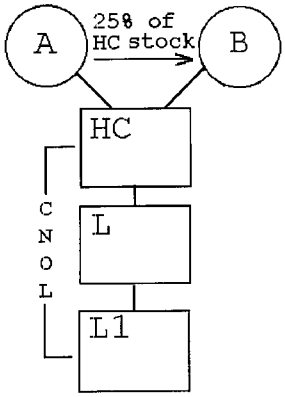

(ii) On November 11, Year 3, A sells 25 percent of the HC stock to B. For purposes of determining if the L loss group has an ownership change under paragraph (b)(1)(i) of this section on November 11, Year 3, HC is treated as a continuation of L under paragraph (b)(4)(i) of this section because it acquired L and became the common parent without terminating the L loss group. Accordingly, HC's testing period commences on January 1, Year 1, the first day of the taxable year of the L loss group in which the consolidated net operating loss that is carried over to Year 3 arose (see §1.382–2T(d)(3)(i)). Immediately after the close of November 11, Year 3, B's percentage ownership interest in the common parent of the loss group (HC) has increased by 55 percentage points over its lowest percentage ownership during the testing period (zero percent). Accordingly, HC and the L loss group have an ownership change on that day.

Example 2. New common parent in case in which common parent ceases to exist. (i) A, B, and C each own one-third of the L stock. L owns all the L1 stock. The L group has a consolidated net operating loss arising in Year 2 that is carried over to Year 3. On November 22, Year 3, L is merged into P, a corporation owned by D, and L1 thereafter files consolidated returns with P. A, B, and C, as a result of owning stock of L, own 90 percent of P's stock after the merger. D owns the remaining 10 percent of P's stock. The merger of L into P qualifies as a reverse acquisition of the L group under §1.1502–75(d)(3)(i), and the L loss group is treated as remaining in existence, with P taking the place of L as the new common parent of the L group. The following is a graphic illustration of these facts:

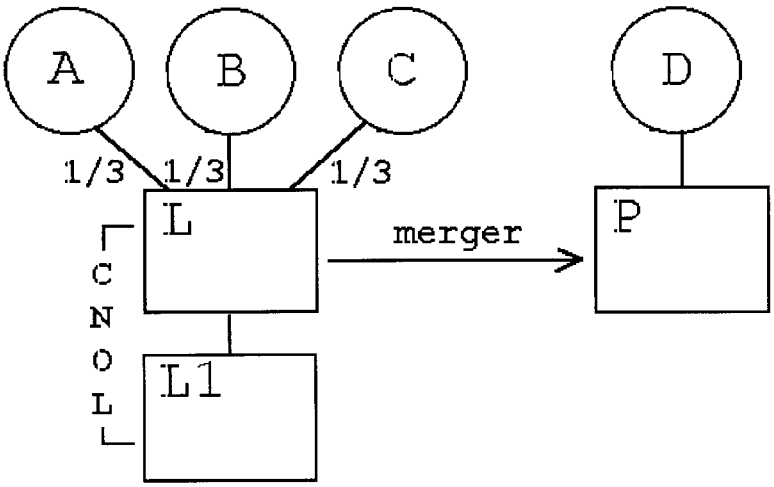

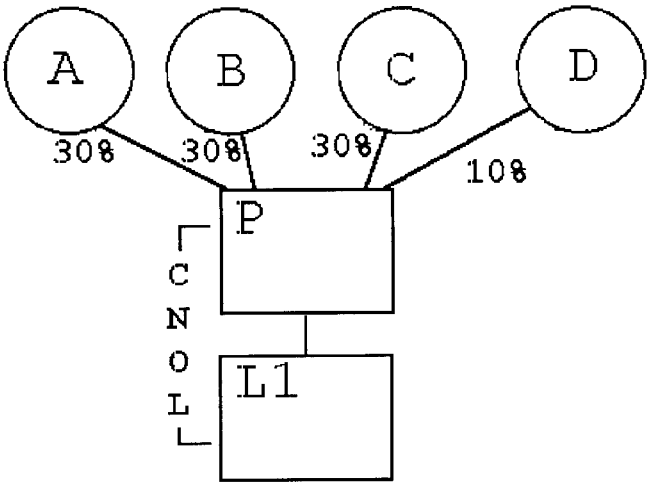

(ii) For purposes of determining if the L loss group has an ownership change on November 22, Year 3, the day of the merger, P is treated as a continuation of L so that the testing period for P begins on January 1, Year 2, the first day of the taxable year of the L loss group in which the consolidated net operating loss that is carried over to

Year 3 arose. Immediately after the close of November 22, Year 3, D is the only 5-percent shareholder that has increased his ownership interest in P during the testing period (from zero to 10 percentage points).

(iii) The facts are the same as in paragraph (i) of this *Example 2*, except that A has held 23⅓ shares (23⅓ percent) of L's stock for five years, and A purchased an additional 10 shares of L stock from E two years before the merger. Immediately after the close of the day of the merger (a testing date), A's ownership interest in P, the common parent of the L loss group, has increased by 6⅔ percentage points over A's lowest percentage ownership during the testing period (23⅓ percent to 30 percent).

(iv) The facts are the same as in (i) of this *Example 2*, except that P has a net operating loss arising in Year 1 that is carried to the first consolidated return year ending after the day of the merger. Solely for purposes of determining whether the L loss group has an ownership change under paragraph (b)(1)(i) of this section, the testing period for P commences on January 1, Year 2. P does not determine the earliest day for its testing period by reference to its net operating loss carryover from Year 1, which §§ 1.1502–1(f)(3) and 1.1502–75(d)(3)(i) treat as arising in a SRLY. See § 1.1502–94 to determine the application of section 382 with respect to P's net operating loss carryover.

Example 3. Newly acquired loss subgroup parent. (i) P owns all the L stock and L owns all the L1 stock. The P group has a consolidated net operating loss arising in Year 1 that is carried over to Year 3. On January 19, Year 2, L issues a 20 percent stock interest to B. On February 5, Year 3, P contributes its L stock to a newly formed subsidiary, HC, in exchange for all the HC stock, and distributes the HC stock to its sole shareholder A. HC, L, and L1 thereafter file consolidated returns. A portion of the P group's Year 1 consolidated net operating loss is apportioned to L and L1 under § 1.1502–21(b) and is carried over to the HC group's year ending after February 5, Year 3. HC, L, and L1 compose a loss subgroup within the meaning of § 1.1502–91(d) with respect to the net operating loss carryovers from Year 1. The following is a graphic illustration of these facts:

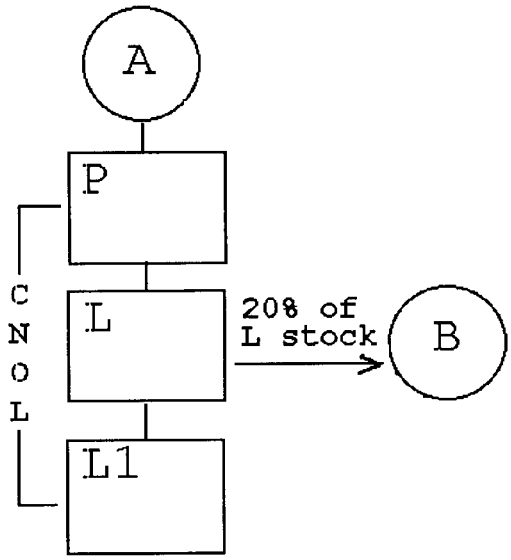

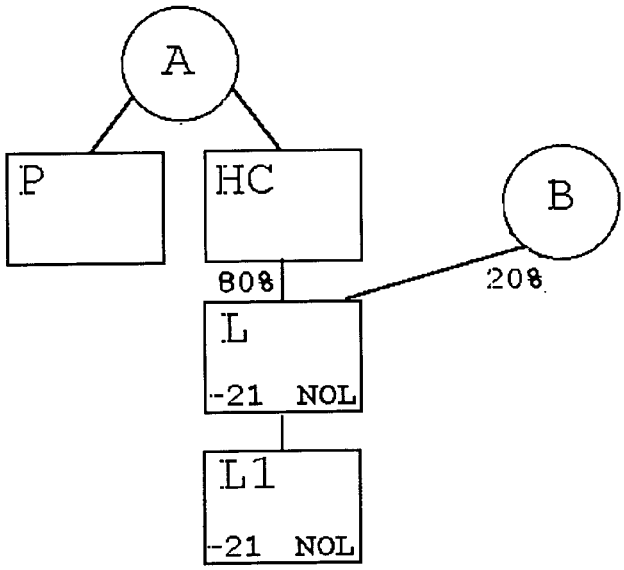

(ii) February 5, Year 3, is a testing date for HC as the loss subgroup parent with respect to the net operating loss carryovers of L and L1 from Year 1. See paragraph (b)(1)(ii)(B) of this section. For purposes of determining whether HC has an ownership change on the testing date, appropriate adjustments must be made with respect to the changes in the

percentage ownership of the stock of HC because HC was not the loss subgroup parent for at least 3 years prior to the day on which it became a member of the HC loss subgroup (a testing date). The appropriate adjustments include adjustments so that HC succeeds to the owner shifts of other members of the former group. Thus, HC succeeds to the owner shift of L that resulted from the sale of the 20 percent interest to B in determining whether the HC loss subgroup has an ownership change on February 5, Year 3, and on any subsequent testing date that includes January 19, Year 2.

(4) *End of separate tracking of certain losses.* If §1.1502–96(a) (relating to the end of separate tracking of attributes) applies to a loss subgroup, then, while one or more members that were included in the loss subgroup remain members of the consolidated group, there is an ownership change with respect to their attributes described in §1.1502–96(a)(2) only if the consolidated group is a loss group and has an ownership change under paragraph (b)(1)(i) of this section (or such a member has an ownership change under §1.1502–96(b) (relating to ownership changes of subsidiaries)). If, however, the loss subgroup has had an ownership change before §1.1502–96(a) applies, see §1.1502–96(c) for the continuing application of the subgroup's section 382 limitation with respect to its pre-change subgroup attributes.

(c) *Supplemental rules for determining ownership change*—

(1) *Scope.* This paragraph (c) contains a supplemental rule for determining whether there is an ownership change of a loss group (or loss subgroup). It applies in addition to, and not instead of, the rules of paragraph (b) of this section. Thus, for example, if the common parent of the loss group has an ownership change under paragraph (b) of this section, the loss group has an ownership change even if, by applying this paragraph (c), the common parent would not have an ownership change. This paragraph (c) does not apply in determining an ownership change of a loss subgroup for which an election under §1.1502–91(d)(4) is made.

(2) *Cause for applying supplemental rule.* This paragraph (c) applies to a loss group (or loss subgroup) if—

(i) Any 5-percent shareholder of the common parent (or loss subgroup parent) increases its percentage ownership interest in the stock of both—

(A) A subsidiary of the loss group (or loss subgroup) other than by a direct or indirect acquisition of stock of the common parent (or loss subgroup parent); and

(B) The common parent (or loss subgroup parent);

(ii) Those increases occur within a 3 year period ending on any day of a consolidated return year or, if shorter, the period beginning on the first day following the most recent ownership change of the loss group (or loss subgroup); and

(iii) Either—

(A) The common parent (or loss subgroup parent) has actual knowledge of the increase in the 5-percent shareholder's ownership interest in the stock of the subsidiary (or has actual knowledge of the plan or arrangement described in paragraph (c)(3)(i) of this section) before the date that the group's income tax return is filed for the taxable year that includes the date of that increase; or

(B) At any time during the period described in paragraph (c)(2)(ii) of this section, the 5-percent shareholder of the common parent is also a 5-percent shareholder of the subsidiary (determined without regard to paragraph (c)(3)(i) of this section) whose percentage increase in the ownership of the stock of the subsidiary would be taken into account in determining if the subsidiary has an ownership change (determined as if the subsidiary was a loss corporation and applying the principles of §1.382–2T(k), including the principles relating to duty to inquire).

(3) *Operating rules.* Solely for purposes of this paragraph (c)—

(i) A 5-percent shareholder of the common parent (or loss subgroup parent) is treated as increasing its ownership interest in the stock of a subsidiary to the extent, if any, that another person or persons increases its percentage ownership interest in the stock of a subsidiary pursuant to a plan or arrangement under which the 5-percent shareholder increases its percentage ownership interest in the common parent (or loss subgroup parent);

(ii) The rules in section 382(l)(3) and §§1.382–2T(h) and 1.382–4(d) (relating to

constructive ownership) apply with respect to the stock of the subsidiary by treating such stock as stock of a loss corporation; and

(iii) In the case of a loss subgroup, a subsidiary includes any member of the loss subgroup other than the loss subgroup parent. (A loss subgroup parent is, however, a subsidiary of the loss group of which it is a member.)

(4) *Supplemental ownership change rules.* The determination whether the common parent (or loss subgroup parent) has an ownership change is made by applying paragraph (b)(1) of this section as modified by the following additional rules:

(i) *Additional testing dates for the common parent (or loss subgroup parent).* A testing date for the common parent (or loss subgroup parent) also includes—

(A) Each day on which there is an increase in the percentage ownership of stock of a subsidiary as described in paragraph (c)(2) of this section; and

(B) The first day of the first consolidated return year for which the group is a loss group (or the members compose a loss subgroup).

(ii) *Treatment of subsidiary stock as stock of the common parent (or loss subgroup parent).* The common parent (or loss subgroup parent) is treated as though it had issued to the person acquiring (or deemed to acquire) the subsidiary stock an amount of its own stock (by value) that equals the value of the subsidiary stock represented by the percentage increase in that person's ownership of the subsidiary (determined on a separate entity basis). Similar principles apply if the increase in percentage ownership interest is effected by a redemption or similar transaction.

(iii) *Different testing periods.* Stock treated as issued under paragraph (c)(4)(ii) of this section on a testing date is not treated as so issued for purposes of applying the ownership change rules of this paragraph (c) and paragraph (b)(1) of this section in a testing period that does not include that testing date.

(iv) *Disaffiliation of a subsidiary.* If a deemed issuance of stock under paragraph (c)(4)(ii) of this section would not cause the loss group (or loss subgroup) to have an ownership change before the day (if any) on which the subsidiary ceases to be a member of the loss group (or subgroup), then paragraph (c)(4) of this section shall not apply.

(v) *Subsidiary stock acquired first.* If an increase of subsidiary stock described in paragraph (c)(2)(i)(A) of this section occurs before the date that the 5-percent shareholder increases its percentage ownership interest in the stock of the common parent (or loss subgroup parent), then the deemed issuance of stock is treated as occurring on that later date, but in an amount equal to the value of the subsidiary stock on the date it was acquired.

(vi) *Anti-duplication rule.* If two or more 5-percent shareholders are treated as increasing their percentage ownership interests pursuant to the same plan or arrangement described in paragraph (c)(3)(i) of this section, appropriate adjustments must be made so that the amount of stock treated as issued is not taken into account more than once.

(5) *Examples.* The following examples illustrate the principles of this paragraph (c):

Example 1. Stock of the common parent under supplemental rules. (i) A owns all the L stock. L is not a member of an affiliated group and has a net operating loss carryover arising in Year 1 that is carried over to Year 6. On September 20, Year 6, L transfers all of its assets and liabilities to a newly created subsidiary, S, in exchange for S stock. L and S thereafter file consolidated returns. On November 23, Year 6, B contributes cash to L in exchange for a 45 percent ownership interest in L and contributes cash to S for a 20 percent ownership interest in S.

(ii) During the 3 year period ending on November 23, Year 6, B is a 5% shareholder of L and of S that increases its ownership interest in L and S during that period. Under paragraph (c)(4)(ii) of this section, the determination whether L (the common parent of a loss group) has an ownership change on November 23, Year 6 (or, subject to paragraph (c)(4)(iv) of this section, on any testing date in the testing period which includes November 23, Year 6), is made by applying paragraph (b)(1)(i) of this section and by treating the value of B's 20 percent ownership interest in S as if it were L stock issued to B. Because B is a 5% shareholder of both L and S during the 3 year period ending on November 23, Year 6, and B's increase in its percentage ownership in the stock of S would be taken into account in determining if S (if it were a loss corporation) had an ownership change,

it is not relevant whether L has actual knowledge of B's acquisition of S stock.

Example 2. Plan or arrangement—public offering of subsidiary stock. (i) A owns all the stock of L and L owns all the stock of L1. The L group has a consolidated net operating loss arising in Year 1 that resulted from the operations of L1 and that is carried over to Year 2. On October 7, Year 2, A sells 49 percent of the L stock to B. As part of a plan that includes the sale of L stock, A causes a public offering of L1 stock on November 6, Year 2. L has actual knowledge of the plan. The following is a graphic illustration of these facts:

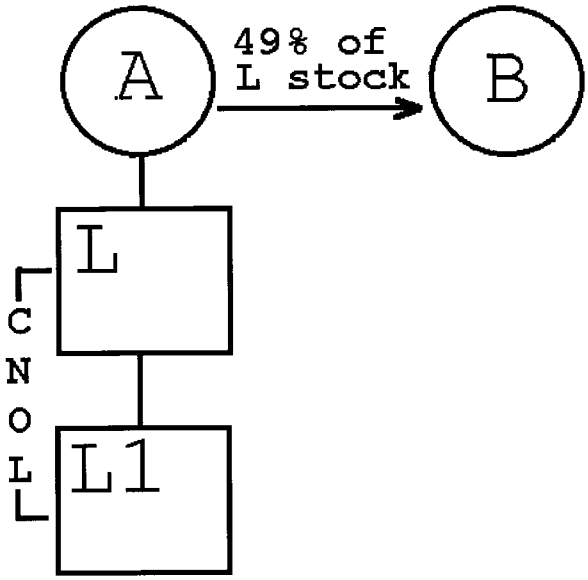

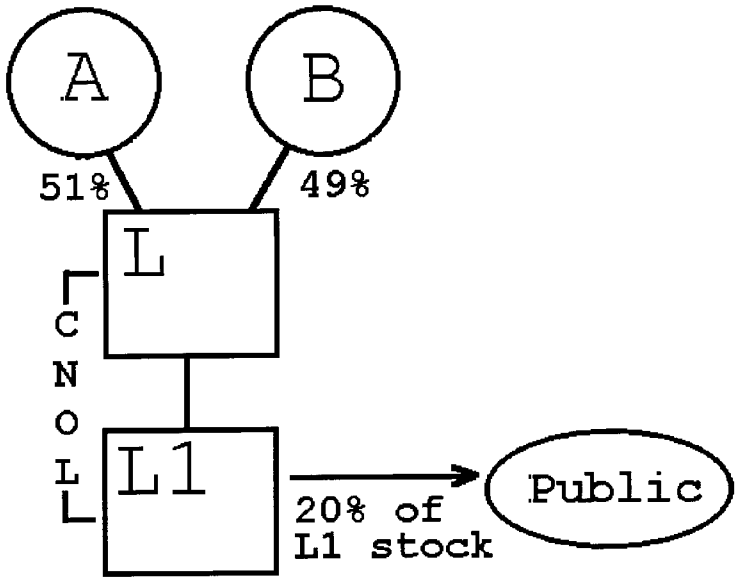

(ii) A's sale of the L stock to B does not cause an ownership change of the L loss group on October 7, Year 2, under the rules of § 1.382–2T and paragraph (b)(1)(i) of this section.

(iii) Because the issuance of L1 stock to the public occurs as part of the same plan as

B's acquisition of L stock, and L has knowledge of the plan, paragraph (c)(4) of this section applies to determine whether the L loss group has an ownership change on November 6, Year 2 (or, subject to paragraph (c)(4)(iv) of this section, on any testing date for which the testing period includes November 6, Year 2).

(d) *Testing period following ownership change under this section.* If a loss group (or a loss subgroup) has had an ownership change under this section, the testing period for determining a subsequent ownership change with respect to pre-change consolidated attributes (or pre-change subgroup attributes) begins no earlier than the first day following the loss group's (or loss subgroup's) most recent change date.

(e) *Information statements*—(1) *Common parent of a loss group.* The common parent of a loss group must file the information statement required by §1.382–2T(a)(2)(ii) for a consolidated return year because of any owner shift, equity structure shift, or other transaction described in §1.382–2T(a)(2)(i)—

(i) With respect to the common parent and with respect to any subsidiary stock subject to paragraph (c) of this section; and

(ii) With respect to an ownership change described in §1.1502–96(b) (relating to ownership changes of subsidiaries).

(2) *Abbreviated statement with respect to loss subgroups.* The common parent of a consolidated group that has a loss subgroup during a consolidated return year must file the information statement required by §1.382–2T(a)(2)(ii) because of any owner shift, equity structure shift, or other transaction described in §1.382–2T(a)(2)(i) with respect to the loss subgroup parent and with respect to any subsidiary stock subject to paragraph (c) of this section. Instead of filing a separate statement for each loss subgroup parent, the common parent (which is treated as a loss corporation) may file the single statement described in paragraph (e)(1) of this section. In addition to the information concerning stock ownership of the common parent, the single statement must identify each loss subgroup parent and state which loss subgroups, if any, have had ownership changes during the consolidated return year. The loss subgroup parent is, however, still required to maintain the records necessary to determine if the loss subgroup has an ownership change. This paragraph (e)(2) applies with respect to the attributes of a loss subgroup until, under §1.1502–96(a), the attributes are no longer treated as described in §1.1502–91(d) (relating to the definition of loss subgroup). After that time, the information statement described in paragraph (e)(1) of this section must be filed with respect to those attributes.

[T.D. 8824, 64 FR 36137, July 2, 1999]

§1.1502–93 Consolidated section 382 limitation (or subgroup section 382 limitation).

(a) *Determination of the consolidated section 382 limitation (or subgroup section 382 limitation)*—(1) *In general.* Following an ownership change, the consolidated section 382 limitation (or subgroup section 382 limitation) for any post-change year is an amount equal to the value of the loss group (or loss subgroup), as defined in paragraph (b) of this section, multiplied by the long-term tax-exempt rate that applies with respect to the ownership change, and adjusted as required by section 382 and the regulations thereunder. See, for example, section 382(b)(2) (relating to the carryforward of unused section 382 limitation), section 382(b)(3)(B) (relating to the section 382 limitation for the post-change year that includes the change date), section 382(h) (relating to recognized built-in gains and section 338 gains), and section 382(m)(2) (relating to short taxable years). For special rules relating to the recognized built-in gains of a loss group (or loss subgroup), see paragraph (c)(2) of this section.

(2) *Coordination with apportionment rule.* For special rules relating to apportionment of a consolidated section 382 limitation (or a subgroup section 382 limitation) or net unrealized built-in gain when one or more corporations cease to be members of a loss group (or a loss subgroup) and to aggregation of amounts so apportioned, see §1.1502–95(c).

(b) *Value of the loss group (or loss subgroup)*—(1) *Stock value immediately before ownership change.* Subject to any adjustment under paragraph (b)(2) of this section, the value of the loss group

(or loss subgroup) is the value, immediately before the ownership change, of the stock of each member, other than stock that is owned directly or indirectly by another member. For this purpose—

(i) Ownership is determined under § 1.382–2T;

(ii) A member is considered to indirectly own stock of another member through a nonmember only if the member has a 5-percent or greater ownership interest in the nonmember; and

(iii) Stock includes stock described in section 1504(a)(4) and § 1.382–2T(f)(18)(ii) and (iii).

(2) *Adjustment to value*—(i) *In general.* The value of the loss group (or loss subgroup), as determined under paragraph (b)(1) of this section, is adjusted under any rule in section 382 or the regulations thereunder requiring an adjustment to such value for purposes of computing the amount of the section 382 limitation. See, for example, section 382(e)(2) (redemptions and corporate contractions), section 382(l)(1) (certain capital contributions) and section 382(l)(4) (ownership of substantial nonbusiness assets). For purposes of section 382(e)(2), redemptions and corporate contractions that do not effect a transfer of value outside of the loss group (or loss subgroup) are disregarded. For purposes of section 382(l)(1), capital contributions between members of the loss group (or loss subgroup) (or a contribution of stock to a member made solely to satisfy the loss subgroup parent requirement of paragraph (d)(1)(ii) or (2)(ii) of this section), are not taken into account. Also, the substantial nonbusiness asset test of section 382(l)(4) is applied on a group (or subgroup) basis, and is not applied separately to its members.

(ii) *Anti-duplication.* Appropriate adjustments must be made to the extent necessary to prevent any duplication of the value of the stock of a member, even though corporations that do not file consolidated returns may not be required to make such an adjustment. In making these adjustments, the group (or loss subgroup) may apply the principles of § 1.382–8 (relating to controlled groups of corporations) in determining the value of a loss group (or loss subgroup) even if that section would not apply if separate returns were filed. Also, the principles of § 1.382–5(d) (relating to successive ownership changes and absorption of a section 382 limitation) may apply to adjust the consolidated section 382 limitation (or subgroup section 382 limitation) of a loss group (or loss subgroup) to avoid a duplication of value if there are simultaneous (rather than successive) ownership changes.

(3) *Examples.* The following examples illustrate the principles of this paragraph (b):

Example 1. Basic case. (i) L, L1, and L2 compose a loss group. L has outstanding common stock, the value of which is $100. L1 has outstanding common stock and preferred stock that is described in section 1504(a)(4). L owns 90 percent of the L1 common stock, and A owns the remaining 10 percent of the L1 common stock plus all the preferred stock. The value of the L1 common stock is $40, and the value of the L1 preferred stock is $30. L2 has outstanding common stock, 50 percent of which is owned by L and 50 percent by L1. The L group has an ownership change. The following is a graphic illustration of these facts:

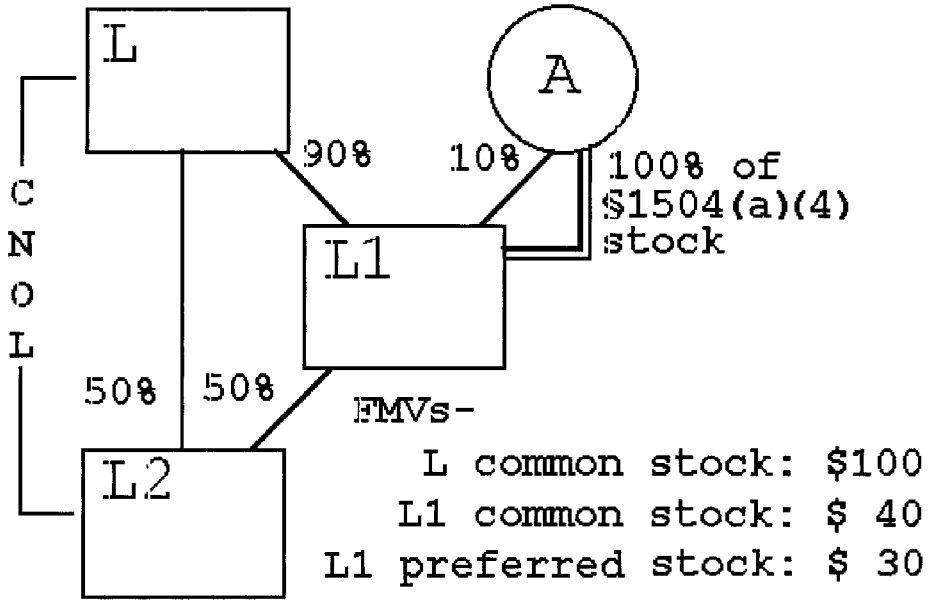

(ii) Under paragraph (b)(1) of this section, the L group does not include the value of the stock of any member that is owned directly or indirectly by another member in computing its consolidated section 382 limitation. Accordingly, the value of the stock of the loss group is $134, the sum of the value of—

(a) The common stock of L ($100);

(b) The 10 percent of the L1 common stock ($4) owned by A; and

(c) The L1 preferred stock ($30) owned by A.

Example 2—Indirect ownership. (i) L and L1 compose a consolidated group. L's stock has a value of $100. L owns 80 shares (worth $80) and corporation M owns 20 shares (worth $20) of the L1 stock. L also owns 79 percent of the stock of corporation M. The L group has an ownership change. The following is a graphic illustration of these facts:

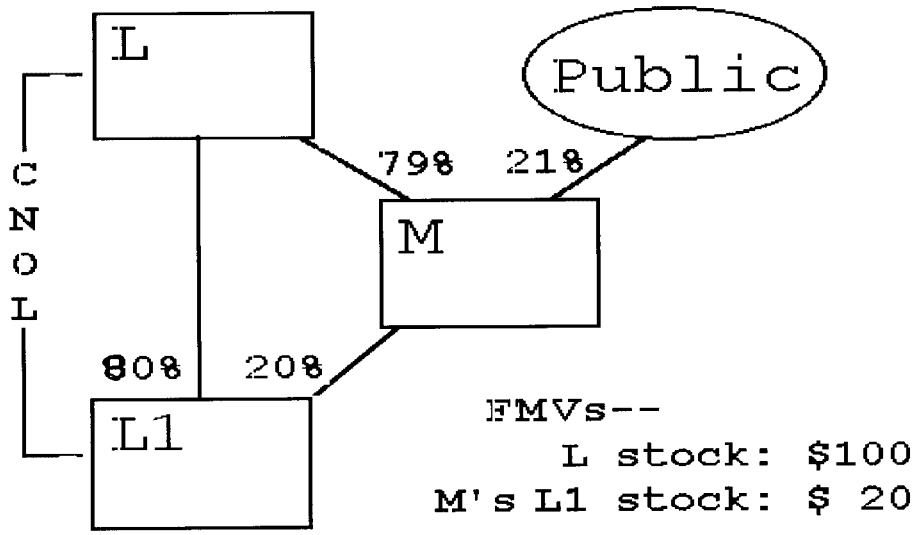

(ii) Under paragraph (b)(1) of this section, because of L's more than 5 percent ownership interest in M, a nonmember, L is considered to indirectly own 15.8 shares of the L1 stock held by M (79% × 20 shares). The value of the L loss group is $104.20, the sum of the values of—

(a) The L stock ($100); and

(b) The L1 stock not owned directly or indirectly by L (21% × $20, or $4.20).

(c) *Recognized built-in gain of a loss group or loss subgroup*—(1) *In general.* If a loss group (or loss subgroup) has a net unrealized built-in gain, any recognized built-in gain of the loss group (or loss subgroup) is taken into account under section 382(h) in determining the consolidated section 382 limitation (or subgroup section 382 limitation).

(2) *Adjustments.* Appropriate adjustments must be made so that any recognized built-in gain of a member that increases more than one section 382 limitation (whether consolidated, subgroup, or separate) does not effect a duplication in the amount of consolidated taxable income that can be offset by pre-change net operating losses. For example, a consolidated section 382 limitation that is increased by recognized built-in gains is reduced to the extent that pre-change net operating losses of a loss subgroup absorb additional consolidated taxable income because the same recognized built-in gains caused an increase in that loss subgroup's section 382 limitation. In addition, recognized built-in gain may not increase the amount of consolidated taxable income that can be offset by recognized built-in losses.

(d) *Continuity of business*—(1) *In general.* A loss group (or a loss subgroup) is treated as a single entity for purposes of determining whether it satisfies the continuity of business enterprise requirement of section 382(c)(1).

(2) *Example.* The following example illustrates the principle of this paragraph (d):

Example. Continuity of business enterprise. L owns all the stock of two subsidiaries, L1 and L2. The L group has an ownership change. It has pre-change consolidated attributes attributable to L2. Each of the members has historically conducted a separate line of business. Each line of business is approximately equal in value. One year after the ownership change, L discontinues its separate business and the business of L2. The separate business of L1 is continued for the remainder of the 2 year period following the ownership change. The continuity of business enterprise requirement of section 382(c)(1) is met even though the separate businesses of L and L2 are discontinued.

(e) *Limitations of losses under other rules.* If a section 382 limitation for a

post-change year exceeds the consolidated taxable income that may be offset by pre-change attributes for any reason, including the application of the limitation of § 1.1502–21(c), the amount of the excess is carried forward under section 382(b)(2) (relating to the carryforward of unused section 382 limitation).

[T.D. 8824, 64 FR 36153, July 2, 1999]

§ 1.1502–94 Coordination with section 382 and the regulations thereunder when a corporation becomes a member of a consolidated group.

(a) *Scope*—(1) *In general.* This section applies section 382 and the regulations thereunder to a corporation that is a new loss member of a consolidated group. A corporation is a new loss member if it—

(i) Carries over a net operating loss that arose (or is treated under § 1.1502–21(c) as arising) in a SRLY with respect to the current group, and that is not described in § 1.1502–91(d)(1); or

(ii) Has a net unrealized built-in loss (determined under paragraph (c) of this section immediately before it becomes a member of the current group by treating that day as a change date) that is not taken into account under § 1.1502–91(d)(2) in determining whether two or more corporations compose a loss subgroup.

(2) *Successor corporation as new loss member.* A new loss member also includes any successor to a corporation that has a net operating loss carryover arising in a SRLY and that is treated as remaining in existence under § 1.382–2(a)(1)(ii) following a transaction described in section 381(a).

(3) *Coordination in the case of a loss subgroup.* For rules regarding the determination of whether there is an ownership change of a loss subgroup with respect to a net operating loss or a net unrealized built-in loss described in § 1.1502–91(d) (relating to the definition of loss subgroup) and the computation of a subgroup section 382 limitation following such an ownership change, see §§ 1.1502–92 and 1.1502–93.

(4) *End of separate tracking of certain losses.* If § 1.1502–96(a) (relating to the end of separate tracking of attributes) applies to a new loss member, then, while that member remains a member of the consolidated group, there is an ownership change with respect to its attributes described in § 1.1502–96(a)(2) only if the consolidated group is a loss group and has an ownership change under § 1.1502–92(b)(1)(i) (or that member has an ownership change under § 1.1502–96(b) (relating to ownership changes of subsidiaries)). If, however, the new loss member has had an ownership change before § 1.1502–96(a) applies, see § 1.1502–96(c) for the continuing application of the section 382 limitation with respect to the member's pre-change losses.

(5) *Cross-reference.* See section 382(a) and § 1.1502–96(c) for the continuing effect of an ownership change after a corporation becomes or ceases to be a member.

(b) *Application of section 382 to a new loss member*—(1) *In general.* Section 382 and the regulations thereunder apply to a new loss member to determine, on a separate entity basis, whether and to what extent a section 382 limitation applies to limit the amount of consolidated taxable income that may be offset by the new loss member's pre-change separate attributes. For example, if an ownership change with respect to the new loss member occurs under section 382 and the regulations thereunder, the amount of consolidated taxable income for any post-change year that may be offset by the new loss member's pre-change separate attributes shall not exceed the section 382 limitation as determined separately under section 382(b) with respect to that member for such year. If the post-change year includes the change date, section 382(b)(3)(A) is applied so that the section 382 limitation of the new loss member does not apply to the portion of the taxable income for such year that is allocable to the period in such year on or before the change date. See generally § 1.382–6 (relating to the allocation of income and loss).

(2) *Adjustment to value.* Appropriate adjustments must be made to the extent necessary to prevent any duplication of the value of the stock of a member, even though corporations that do not file consolidated returns may not be required to make such an adjustment. For example, the principles of

§ 1.1502–93(b)(2)(ii) (relating to adjustments to value) apply in determining the value of a new loss member.

(3) *Pre-change separate attribute defined.* A pre-change separate attribute of a new loss member is—

(i) Any net operating loss carryover of the new loss member described in paragraph (a)(1) of this section; and

(ii) Any recognized built-in loss of the new loss member.

(4) *Examples.* The following examples illustrate the principles of this paragraph (b):

Example 1. Basic case. (i) A and P each own 50 percent of the L stock. On December 19, Year 6, P purchases 30 percent of the L stock from A for cash. L has net operating losses arising in Year 1 and Year 2 that it carries over to Year 6 and Year 7. The following is a graphic illustration of these facts:

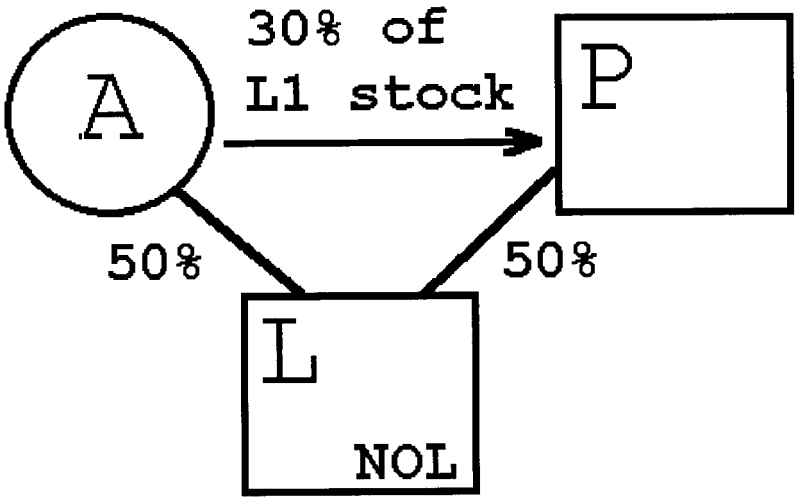

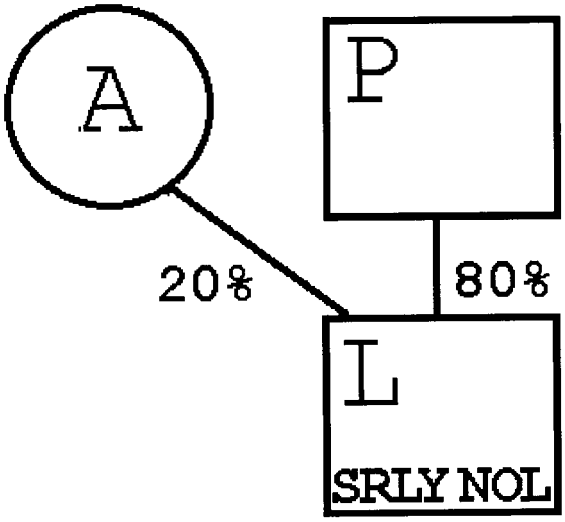

(ii) L is a new loss member because it has net operating loss carryovers that arose in a SRLY with respect to the P group and L is not a member of a loss subgroup under § 1.1502–91(d). Under section 382 and the regulations thereunder, L is a loss corporation on December 19, Year 6, that day is a testing

date for L, and the testing period for L commences on December 20, Year 3.

(iii) P's purchase of L stock does not cause an ownership change of L on December 19, Year 6, with respect to the net operating loss carryovers from Year 1 and Year 2 under section 382 and §1.382–2T. The use of the loss carryovers, however, is subject to limitation under §1.1502–21(c).

Example 2. Multiple new loss members. (i) The facts are the same as in *Example 1,* and, on December 31, Year 6, L purchases all the stock of L1 from B for cash. L1 has a net operating loss of $40 arising in Year 3 that it carries over to Year 7. The following is a graphic illustration of these facts:

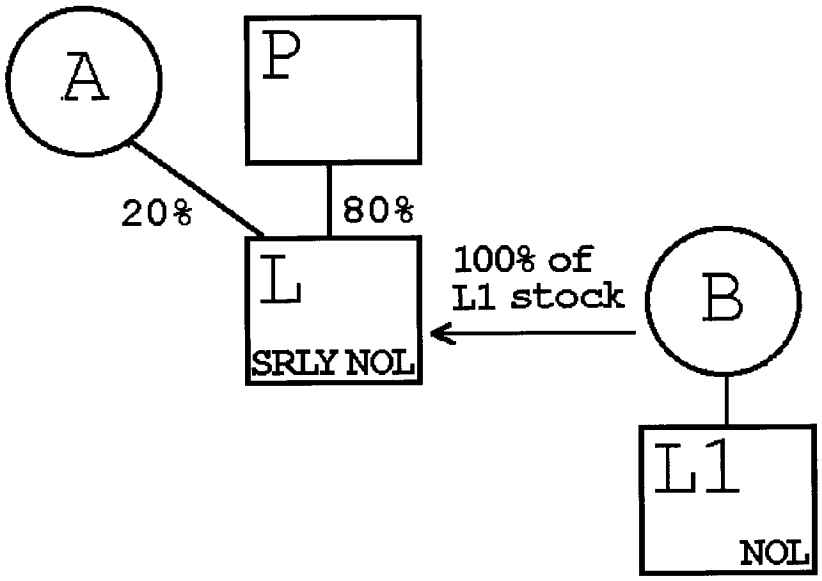

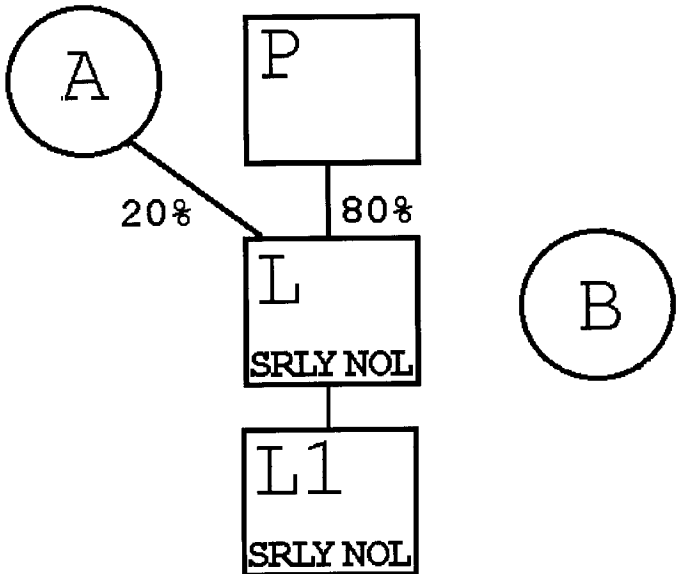

(ii) L1 is a new loss member because it has a net operating loss carryover from Year 3 that arose in a SRLY with respect to the P group and L1 is not a member of a loss subgroup under § 1.1502–91(d)(1).

(iii) L's purchase of all the stock of L1 causes an ownership change of L1 on December 31, Year 6, under section 382 and §1.382–2T. Accordingly, a section 382 limitation based on the value of the L1 stock immediately before the ownership change limits the amount of consolidated taxable income of the P group for any post-change year that may be offset by L1's loss from Year 3.

(iv) L1's ownership change upon becoming a member of the P group is an ownership change described in §1.1502–96(a). Thus, starting on January 1, Year 7, the P group no longer separately tracks owner shifts of the stock of L1 with respect to L1's loss from Year 3, and the P group is a loss group because L1's Year 3 loss is treated as a loss described in §1.1502–91(c).

Example 3. Ownership changes of new loss members. (i) The facts are the same as in Example 2, and, on July 30, Year 7, C purchases all the stock of P for cash.

(ii) L is a new loss member on July 30, Year 7, because its Year 1 and Year 2 losses arose in SRLYs with respect to the P group and it is not a member of a loss subgroup under §1.1502–91(d)(1). The testing period for L commences on August 1, Year 4. C's purchase of all the P stock causes an ownership change of L on July 30, Year 7, under section 382 and §1.382–2T with respect to its Year 1 and Year 2 losses. Accordingly, a section 382 limitation based on the value of the L stock immediately before the ownership change limits the amount of consolidated taxable income of the P group for any post-change year that may be offset by L's Year 1 and Year 2 losses. See §1.1502–21(c) for rules relating to an additional limitation.

(iii) The P group is a loss group on July 30, Year 7, because it is entitled to use L1's loss from Year 3, and such loss is no longer treated as a loss of a new loss member starting the day after L1's ownership change on December 31, Year 6. See §§1.1502–96(a) and 1.1502–91(c)(2). C's purchase of all the P stock causes an ownership change of P, and therefore the P loss group, on July 30, Year 7, with respect to L1's Year 3 loss. Accordingly, a consolidated section 382 limitation based on the value of the P stock immediately before the ownership change limits the amount of consolidated taxable income of the P group for any post-change year that may be offset by L1's Year 3 loss.

(c) *Built-in gains and losses.* As the context may require, the principles of §§1.1502–91(g) and (h) and 1.1502–93(c) (relating to built-in gains and losses) apply to a new loss member on a separate entity basis. See §1.1502–91(g)(4). See §1.1502–13 (including *Example 10* of §1.1502–13(c)(7)) for rules relating to the treatment of intercompany transactions.

(d) *Information statements.* The common parent of a consolidated group that has a new loss member subject to paragraph (b)(1) of this section during a consolidated return year must file the information statement required by §1.382–2T(a)(2)(ii) because of any owner shift, equity structure shift, or other transaction described in §1.382–2T(a)(2)(i). Instead of filing a separate statement for each new loss member, the common parent may file a single statement described in §1.382–2T(a)(2)(ii) with respect to the stock ownership of the common parent (which is treated as a loss corporation). In addition to the information concerning stock ownership of the common parent, the single statement must identify each new loss member and state which new loss members, if any, have had ownership changes during the consolidated return year. The new loss member is, however, required to maintain the records necessary to determine if it has an ownership change. This paragraph (d) applies with respect to the attributes of a new loss member until an event occurs which ends separate tracking under §1.1502–96(a). After that time, the information statement described in §1.1502–92(e)(1) must be filed with respect to these attributes.

[T.D. 8824, 64 FR 36155, July 2, 1999]

§1.1502–95 Rules on ceasing to be a member of a consolidated group (or loss subgroup).

(a) *In general*—(1) *Consolidated group.* This section provides rules for applying section 382 on or after the day that a member ceases to be a member of a consolidated group (or loss subgroup). The rules concern how to determine whether an ownership change occurs with respect to losses of the member, and how a consolidated section 382 limitation (or subgroup section 382 limitation) and a loss group's (or loss subgroup's) net unrealized built-in gain or loss is apportioned to the member. As the context requires, a reference in this section to a loss group, a member, or a corporation also includes a reference to a loss subgroup, and a reference to a consolidated section 382 limitation also includes a reference to a subgroup section 382 limitation.

(2) *Election by common parent.* Only the common parent (not the loss subgroup parent) may make the election under paragraph (c) of this section to apportion a consolidated section 382 limitation (or subgroup section 382 limitation) or a loss group's (or loss subgroup's) net unrealized built-in gain.

(3) *Coordination with §§ 1.1502–91 through 1.1502–93.* For rules regarding the determination of whether there is an ownership change of a loss subgroup and the computation of a subgroup section 382 limitation following such an ownership change, see §§ 1.1502–91 through 1.1502–93.

(b) *Separate application of section 382 when a member leaves a consolidated group*—(1) *In general.* Except as provided in §§ 1.1502–91 through 1.1502–93 (relating to rules applicable to loss groups and loss subgroups), section 382 and the regulations thereunder apply to a corporation on a separate entity basis after it ceases to be a member of a consolidated group (or loss subgroup). Solely for purposes of determining whether a corporation has an ownership change—

(i) Any portion of a consolidated net operating loss that is apportioned to the corporation under § 1.1502–21(b) is treated as a net operating loss of the corporation beginning on the first day of the taxable year in which the loss arose;

(ii) The testing period may include the period during which (or before which) the corporation was a member of the group (or loss subgroup); and

(iii) Except to the extent provided in § 1.1502–96(d) (relating to reattributed losses), the day it ceases to be a member of a consolidated group is treated as a testing date of the corporation within the meaning of § 1.382–2(a)(4).

(2) *Effect of a prior ownership change of the group.* If a loss group has had an ownership change under § 1.1502–92 before a corporation ceases to be a member of a consolidated group (the former member)—

(i) Any pre-change consolidated attribute that is subject to a consolidated section 382 limitation continues to be treated as a pre-change loss with respect to the former member after it is apportioned to the former member and, if any net unrealized built-in loss is allocated to the former member under paragraph (e) of this section, any recognized built-in loss of the former member is a pre-change loss of the member;

(ii) The section 382 limitation with respect to such pre-change attribute is zero unless the common parent, under paragraph (c) of this section, apportions to the former member all or part of the consolidated section 382 limitation applicable to such attribute. The limitation applicable to a pre-change attribute other than a recognized built-in loss may be increased to the extent that the common parent has apportioned all or part of the loss group's net unrealized built-in gain to the former member, and the former member recognizes built-in gain during the recognition period;

(iii) The testing period for determining a subsequent ownership change with respect to such pre-change attribute (or such net unrealized built-in loss, if any) begins no earlier than the first day following the loss group's most recent change date; and

(iv) As generally provided under section 382, an ownership change of the former member that occurs on or after the day it ceases to be a member of a loss group may result in an additional, lesser limitation amount with respect to such losses.

(3) *Application in the case of a loss subgroup.* If two or more former members are included in the same loss subgroup immediately after they cease to be members of a consolidated group, the principles of paragraphs (b), (c) and (e) of this section apply to the loss subgroup. Therefore, for example, an apportionment by the common parent under paragraph (c) of this section is made to the loss subgroup rather than separately to its members. If the common parent of the consolidated group apportions all or part of a limitation (or net unrealized built-in gain) separately to one or more former members that are included in a loss subgroup because the common parent of the acquiring group makes an election under § 1.1502–91(d)(4) with respect to those members, the aggregate of those separate amounts is treated as the amount apportioned to the loss subgroup. Such separate apportionment may occur, for

example, because the election under § 1.1502–91(d)(4) has not been filed at the time that the election of apportionment is made under paragraph (f) of this section.

(4) *Examples.* The following examples illustrate the principles of this paragraph (b):

Example 1. Treatment of departing member as a separate corporation throughout the testing period. (i) A owns all the L stock. L owns all the stock of L1 and L2. The L group has a consolidated net operating loss arising in Year 1 that is carried over to Year 3. On January 12, Year 2, A sells 30 percent of the L stock to B. On February 7, Year 3, L sells 40 percent of the L2 stock to C, and L2 ceases to be a member of the group. A portion of the Year 1 consolidated net operating loss is apportioned to L2 under § 1.1502–21(b) and is carried to L2's first separate return year, which ends December 31, Year 3. The following is a graphic illustration of these facts:

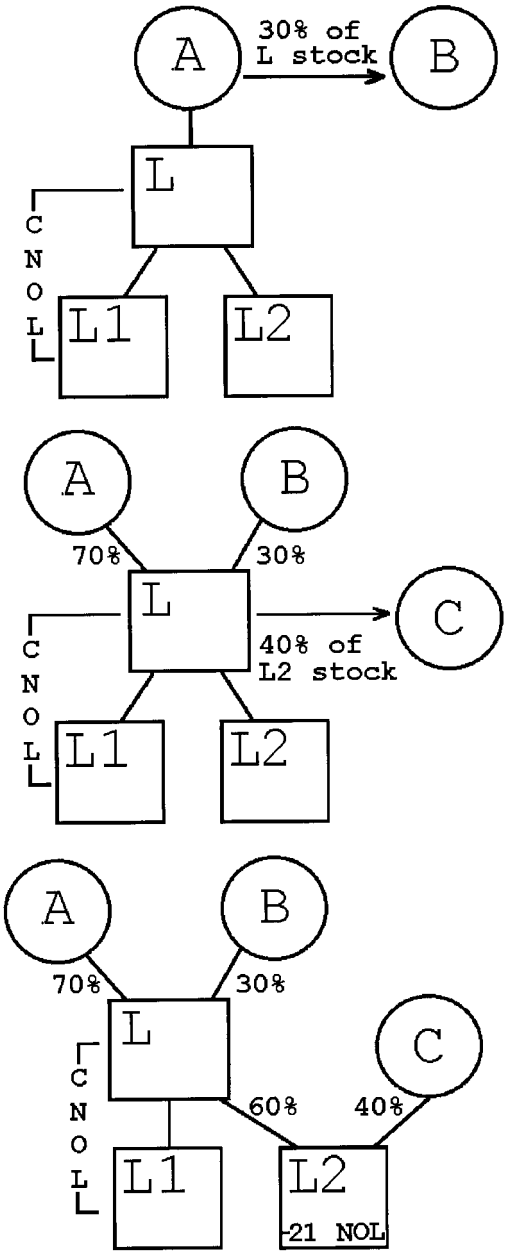

(ii) Under paragraph (b)(1) of this section, L2 is a loss corporation on February 7, Year 3. Under paragraph (b)(1)(iii) of this section, February 7, Year 3, is a testing date. Under paragraph (b)(1)(ii) of this section, the testing period for L2 with respect to this testing date commences on January 1, Year 1, the first day of the taxable year in which the

portion of the consolidated net operating loss apportioned to L2 arose. Therefore, in determining whether L2 has an ownership change on February 7, Year 3, B's purchase of 30 percent of the L stock and C's purchase of 40 percent of the L2 stock are each owner shifts. L2 has an ownership change under section 382(g) and §1.382–2T because B and C have increased their ownership interests in L2 by 18 and 40 percentage points, respectively, during the testing period.

Example 2. Effect of prior ownership change of loss group. (i) L owns all the L1 stock and L1 owns all the L2 stock. The L loss group had an ownership change under §1.1502–92 in Year 2 with respect to a consolidated net operating loss arising in Year 1 and carried over to Year 2 and Year 3. The consolidated section 382 limitation computed solely on the basis of the value of the stock of L is $100. On December 31, Year 2, L1 sells 25 percent of the stock of L2 to B. L2 is apportioned a portion of the Year 1 consolidated net operating loss which it carries over to its first separate return year ending after December 31, Year 2. L2's separate section 382 limitation with respect to this loss is zero unless L elects to apportion all or a part of the consolidated section 382 limitation to L2. (See paragraph (c) of this section for rules regarding the apportionment of a consolidated section 382 limitation.) L apportions $50 of the consolidated section 382 limitation to L2, and the remaining $50 of the consolidated section 382 limitation stays with the loss group composed of L and L1.

(ii) On December 31, Year 3, L1 sells its remaining 75 percent stock interest in L2 to C, resulting in an ownership change of L2. L2's section 382 limitation computed on the change date with respect to the value of its stock is $30. Accordingly, L2's section 382 limitation for post-change years ending after December 31, Year 3, with respect to its pre-change losses, including the consolidated net operating losses apportioned to it from the L group, is $30, adjusted for a short taxable year, carryforward of unused limitation, or any other adjustment required under section 382.

(c) *Apportionment of a consolidated section 382 limitation*—(1) *In general.* The common parent may elect to apportion all or any part of a consolidated section 382 limitation to a former member (or loss subgroup). The common parent also may elect to apportion all or any part of the loss group's net unrealized built-in gain to a former member (or loss subgroup).

(2) *Amount which may be apportioned*—(i) *Consolidated section 382 limitation.* The common parent may apportion all or part of each element of the consolidated section 382 limitation determined under §1.1502–93. For this purpose, the consolidated section 382 limitation consists of two elements—

(A) The value element, which is the element of the limitation determined under section 382(b)(1) (relating to value multiplied by the long-term tax-exempt rate) without regard to such adjustments as those described in section 382(b)(2) (relating to the carryforward of unused section 382 limitation), section 382(b)(3)(B)(relating to the section 382 limitation for the post-change year that includes the change date), section 382(h)(relating to built-in gains and section 338 gains), and section 382(m)(2)(relating to short taxable years); and

(B) The adjustment element, which is so much (if any) of the limitation for the taxable year during which the former member ceases to be a member of the consolidated group that is attributable to a carryover of unused limitation under section 382(b)(2) or to recognized built-in gains under 382(h).

(ii) *Net unrealized built-in gain.* The aggregate amount of the loss group's net unrealized built-in gain that may be apportioned to one or more former members that cease to be members during the same consolidated return year cannot exceed the loss group's excess, immediately after the close of that year, of net unrealized built-in gain over recognized built-in gain, determined under section 382(h)(1)(A)(ii) (relating to a limitation on recognized built-in gain). For this purpose, net unrealized built-in gain apportioned to former members in prior consolidated return years is treated as recognized built-in gain in those years.

(3) Effect of apportionment on the consolidated group—(i) Consolidated section 382 limitation. The value element of the consolidated section 382 limitation for any post-change year ending after the day that a former member (or loss subgroup) ceases to be a member(s) is reduced to the extent that it is apportioned under this paragraph (c). The consolidated section 382 limitation for the post-change year in which the former member (or loss subgroup) ceases to be a member(s) is also

reduced to the extent that the adjustment element for that year is apportioned under this paragraph (c).

(ii) *Net unrealized built-in gain.* The amount of the loss group's net unrealized built-in gain that is apportioned to the former member (or loss subgroup) is treated as recognized built-in gain for a prior taxable year ending in the recognition period for purposes of applying the limitation of section 382(h)(1)(A)(ii) to the loss group's recognition period taxable years beginning after the consolidated return year in which the former member (or loss subgroup) ceases to be a member.

(4) *Effect on corporations to which an apportionment is made*—(i) *Consolidated section 382 limitation.* The amount of the value element that is apportioned to a former member (or loss subgroup) is treated as the amount determined under section 382(b)(1) for purposes of determining the amount of that corporation's (or loss subgroup's) section 382 limitation for any taxable year ending after the former member (or loss subgroup) ceases to be a member(s). Appropriate adjustments must be made to the limitation based on the value element so apportioned for a short taxable year, carryforward of unused limitation, or any other adjustment required under section 382. The adjustment element apportioned to a former member (or loss subgroup) is treated as an adjustment under section 382(b)(2) or section 382(h), as appropriate, for the first taxable year after the member (or members) ceases to be a member (or members).

(ii) *Net unrealized built-in gain.* For purposes of determining the amount by which the former member's (or loss subgroup's) section 382 limitation for any taxable year beginning after the former member (or loss subgroup) ceases to be a member(s) is increased by its recognized built-in gain—

(A) The amount of net unrealized built-in gain apportioned to a former member (or loss subgroup) is treated as if it were an amount of net unrealized built-in gain determined under section 382(h)(1)(A)(i)(without regard to the threshold of section 382(h)(3)(B)) with respect to such member or loss subgroup, and that amount is not reduced under section 382(h)(1)(A)(ii) by the loss group's recognized built-in gain;

(B) The former member's (or loss subgroup's) 5 year recognition period begins on the loss group's change date;

(C) In applying section 382(h)(1)(A)(ii), the former member (or loss subgroup) takes into account only its prior taxable years that begin after it ceases to be a member of the loss group; and

(D) The former member's (or loss subgroup's) recognized built-in gain on the disposition of an asset is determined under section 382(h)(2)(A), treating references to the change date in that section as references to the loss group's change date.

(5) *Deemed apportionment when loss group terminates.* If a loss group terminates, to the extent the consolidated section 382 limitation or net unrealized built-in gain is not apportioned under paragraph (c)(1) of this section, the consolidated section 382 limitation or net unrealized built-in gain is deemed to be apportioned to the loss subgroup that includes the common parent, or, if there is no loss subgroup that includes the common parent immediately after the loss group terminates, to the common parent. A loss group terminates on the first day of the first taxable year that is a separate return year with respect to each member of the former loss group.

(6) *Appropriate adjustments when former member leaves during the year.* Appropriate adjustments are made to the consolidated section 382 limitation for the consolidated return year during which the former member (or loss subgroup) ceases to be a member(s) to reflect the inclusion of the former member in the loss group for a portion of that year.

(7) *Examples.* The following examples illustrate the principles of this paragraph (c):

Example 1. Consequence of apportionment. (i) L owns all the L1 stock and L1 owns all the L2 stock. The L group has a $200 consolidated net operating loss arising in Year 1 that is carried over to Year 2. At the close of December 31, Year 1, the group has an ownership change under §1.1502–92. The ownership change results in a consolidated section 382 limitation of $10 based on the value of the stock of the group. On August 29, Year 2, L1 sells 30 percent of the stock of L2 to A. L2 is

apportioned $90 of the group's $200 consolidated net operating loss under § 1.1502–21(b). L, the common parent, elects to apportion $6 of the consolidated section 382 limitation to L2. The following is a graphic illustration of these facts:

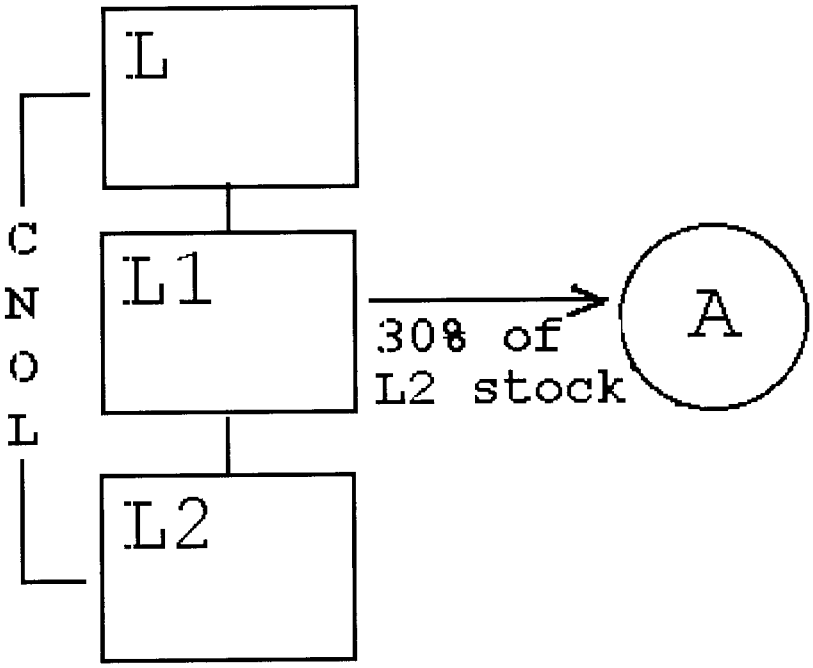

(ii) For its separate return years ending after December 31, Year 2, L2's section 382 limitation with respect to the $90 of the group's net operating loss apportioned to it is $6, adjusted, as appropriate, for any short taxable year, unused section 382 limitation, or other adjustment. For its consolidated return year ending December 31, Year 2 the L group's consolidated section 382 limitation with respect to the remaining $110 of pre-change consolidated attribute is $4 ($10 minus the $6 value element apportioned to L2), adjusted, as appropriate, for any short taxable year, unused section 382 limitation, or other adjustment.

(iii) For the L group's consolidated return year ending December 31, Year 2, the value element of its consolidated section 382 limitation is increased by $4 (rounded to the nearest dollar), to account for the period during which L2 was a member of the L group ($6, the consolidated section 382 limitation apportioned to L2, times 241/365, the ratio of the number of days during Year 2 that L2 is a member of the group to the number of days in the group's consolidated return year). See paragraph (c)(6) of this section. Therefore, the value element of the consolidated section 382 limitation for Year 2 of the L group is $8 (rounded to the nearest dollar).

(iv) The section 382 limitation for L2's short taxable year ending December 31, Year 2, is $2 (rounded to the nearest dollar), which is the amount that bears the same relationship to $6, the value element of the consolidated section 382 limitation apportioned to L2, as the number of days during that short taxable year, 124 days, bears to 365. See § 1.382–5(c).

Example 2. Consequence of no apportionment. The facts are the same as in *Example 1*, except that L does not elect to apportion any portion of the consolidated section 382 limitation to L2. For its separate return years ending after August 29, Year 2, L2's section 382 limitation with respect to the $90 of the group's pre-change consolidated attribute apportioned to L2 is zero under paragraph (b)(2)(ii) of this section. Thus, the $90 consolidated net operating loss apportioned to L2 cannot offset L2's taxable income in any of its separate return years ending after August 29, Year 2. For its consolidated return

years ending after August 29, Year 2, the L group's consolidated section 382 limitation with respect to the remaining $110 of pre-change consolidated attribute is $10, adjusted, as appropriate, for any short taxable year, unused section 382 limitation, or other adjustment.

Example 3. Apportionment of adjustment element. The facts are the same as in *Example 1,* except that L2 ceases to be a member of the L group on August 29, Year 3, and the L group has a $4 carryforward of an unused consolidated section 382 limitation (under section 382(b)(2)) to the Year 3 consolidated return year. The carryover of unused limitation increases the consolidated section 382 limitation for the Year 3 consolidated return year from $10 to $14. L may elect to apportion all or any portion of the $10 value element and all or any portion of the $4 adjustment element to L2.

(d) *Rules pertaining to ceasing to be a member of a loss subgroup*—(1) *In general.* A corporation ceases to be a member of a loss subgroup on the earlier of—

(i) The first day of the first taxable year for which it files a separate return; or

(ii) The first day that it ceases to bear a relationship described in section 1504(a)(1) to the loss subgroup parent (treating for this purpose the loss subgroup parent as the common parent described in section 1504(a)(1)(A)).

(2) *Exceptions.* Paragraph (d)(1)(ii) of this section does not apply to a member of a loss subgroup while that member remains a member of the current group—

(i) If an election under §1.1502–91(d)(4)(relating to treating the subgroup parent requirement as satisfied) applies to the members of the loss subgroup;

(ii) Starting on the day after the change date (but not earlier than the date the loss subgroup becomes a member of the group), if there is an ownership change of the loss subgroup within six months before, on, or after becoming members of the group; or

(iii) Starting the day after the period of 5 consecutive years following the day that the loss subgroup become members of the group during which the loss subgroup has not had an ownership change.

(3) *Examples.* The principles of this paragraph (d) are illustrated by the following examples:

Example 1. Basic case. (i) P owns all the L stock, L owns all the L1 stock and L1 owns all the L2 stock. The P group has a consolidated net operating loss arising in Year 1 that is carried over to Year 2. On December 11, Year 2, P sells all the stock of L to corporation M. Each of L, L1, and L2 is apportioned a portion of the Year 1 consolidated net operating loss, and thereafter each joins with M in filing consolidated returns. Under §1.1502–92, the L loss subgroup has an ownership change on December 11, Year 2. The L loss subgroup has a subgroup section 382 limitation of $100. The following is a graphic illustration of these facts:

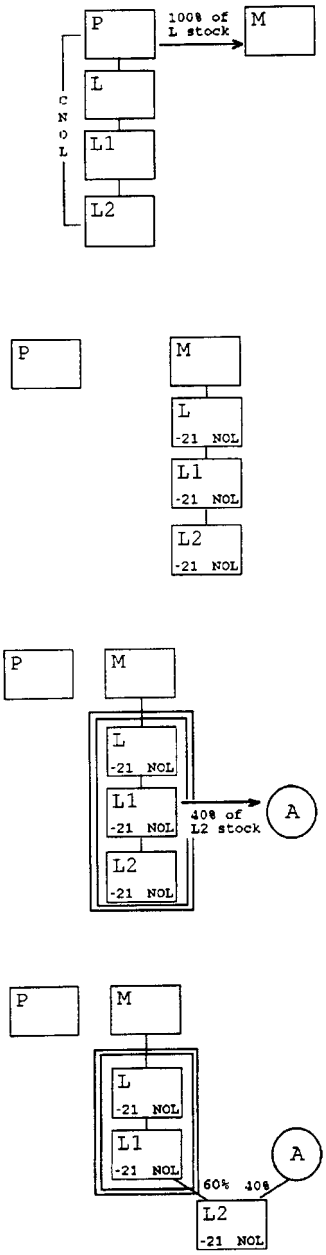

(ii) On May 22, Year 3, L1 sells 40 percent of the L2 stock to A. L2 carries over a portion of the P group's net operating loss from Year 1 to its separate return year ending December 31, Year 3. Under paragraph (d)(1) of this section, L2 ceases to be a member of the L loss subgroup on May 22, Year 3, which is both (1) the first day of the first taxable year

for which it files a separate return and (2) the day it ceases to bear a relationship described in section 1504(a)(1) to the loss subgroup parent, L. The net operating loss of L2 that is carried over from the P group is treated as a pre-change loss of L2 for its separate return years ending after May 22, Year 3. Under paragraphs (a)(2) and (b)(2) of this section, the separate section 382 limitation with respect to this loss is zero unless M elects to apportion all or a part of the subgroup section 382 limitation of the L loss subgroup to L2.

Example 2. Formation of a new loss subgroup. The facts are the same as in *Example 1,* except that A purchases 40 percent of the L1 stock from L rather than purchasing L2 stock from L1. L1 and L2 file a consolidated return for their first taxable year ending after May 22, Year 3, and each of L1 and L2 carries over a part of the net operating loss of the P group that arose in Year 1. Under paragraph (d)(1) of this section, L1 and L2 cease to be members of the L loss subgroup on May 22, Year 3. The net operating losses carried over from the P group are treated as pre-change subgroup attributes of the loss subgroup composed of L1 and L2. The subgroup section 382 limitation with respect to those losses is zero unless M elects to apportion all or part of the subgroup section 382 limitation of the L loss subgroup to the L1 loss subgroup. The following is a graphic illustration of these facts:

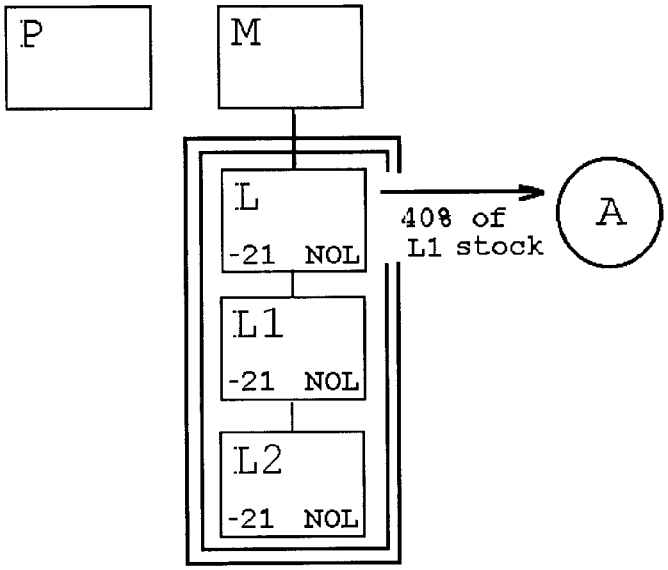

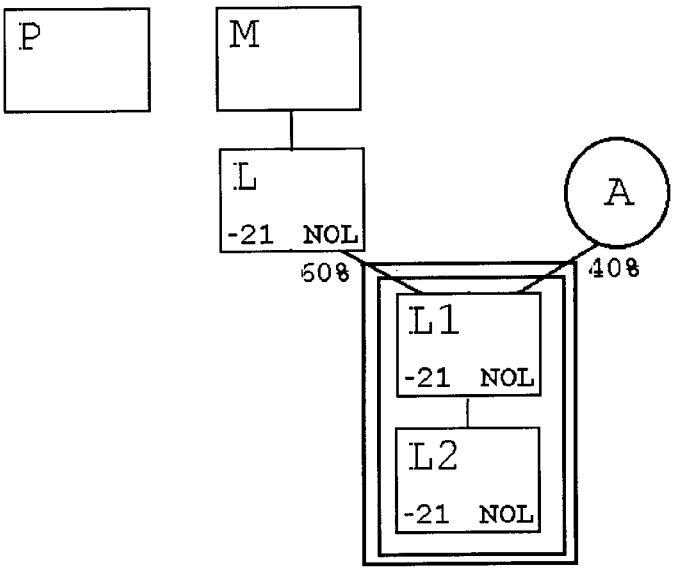

Example 3. Ownership change upon becoming members of the group. (i) A owns all the stock of P, and P owns all the stock of L1 and L2. The P group has a consolidated net operating loss arising in Year 1 that is carried over to Year 3 and Year 4. Corporation M acquires all the stock of P on November 11, Year 3, and P, L1, and L2 thereafter file consolidated

returns with M. M's acquisition results in an ownership change of the P loss subgroup under § 1.1502–92(b)(1)(ii).

(ii) P distributes the L2 stock to M on October 7, Year 4, and L2 ceases to bear the relationship described in section 1504(a)(1) to P, the P loss subgroup parent. However, under paragraph (d)(2) of this section, L2 does not cease to be a member of the P loss subgroup because the P loss subgroup had an ownership change upon becoming members of the M group and L2 remains in the M group.

Example 4. Ceasing to bear a section 1504 (a)(1) to the loss subgroup parent. (i) A owns all the stock of P, and P owns all the stock of L1 and L2. The P group has a consolidated net operating loss arising in Year 1 that is carried over to Year 7. At the close of Year 2, X acquires all of the stock of P, causing an ownership change of the loss subgroup composed of P, L1 and L2 under § 1.1502–92(b)(1)(ii). In Year 4, M, which is owned by the same person that owns X, acquires all of the stock of P, and the M acquisition does not cause a second ownership change of the P loss subgroup.

(ii) P distributes the L2 stock to M on February 3, Year 6 (less than 5 years after the P loss subgroup became members of the M group) and L2 ceases to bear the relationship described in section 1504(a)(1) to P, the loss subgroup parent. Thus, the section 382 limitation from the Year 2 ownership change that applies with respect to the pre-change attributes attributable to L2 is zero except to the extent M elects to apportion all or part of the P loss subgroup section 382 limitation to L2.

Example 5. Relationship through a successor. The facts are the same as in *Example 3,* except that M's acquisition of the P stock does not result in an ownership change of the P loss subgroup, and, instead of P's distributing the stock of L2, L2 merges into L1 on October 7, Year 4. L1 (as successor to L2 in the merger within the meaning of § 1.1502–1(f)(4)) continues to bear a relationship described in section 1504(a)(1) to P, the loss subgroup parent. Thus, L2 does not cease to be a member of the P loss subgroup as a result of the merger.

Example 6. Reattribution of net operating loss carryover under § 1.1502–20(g). The facts are the same as in *Example 3,* except that, instead of distributing the L2 stock to M, P sells that stock to B, and, under § 1.1502–20(g), M reattributes $10 of L2's net operating loss carryover to itself. Under § 1.1502–20(g), M succeeds to the reattributed loss as if the loss were succeeded to in a transaction described in section 381(a). M, as successor to L2, does not cease to be a member of the P loss subgroup.

(e) *Allocation of net unrealized built-in loss*—(1) *In general.* This paragraph (e) provides rules for the allocation of a loss group's (or loss subgroup's) net unrealized built-in loss if a member ceases to be a member of a loss group (or loss subgroup). This paragraph (e) applies if—

(i) A loss group (or loss subgroup) has a net unrealized built-in loss on a change date; and

(ii) Immediately after the close of the consolidated return year in which the departing member ceases to be a member, the amount of the loss group's (or loss subgroup's) excess of net unrealized built-in loss over recognized built-in loss, determined under section 382(h)(1)(B)(ii) (relating to a limitation on recognized built-in loss), is greater than zero. (The amount of such excess is referred to as the remaining NUBIL balance.) In applying section 382(h)(1)(B)(ii) for this purpose, net unrealized built-in loss allocated to departing members in prior consolidated return years is treated as recognized built-in loss in those years.

(2) *Amount of allocation*—(i) *In general.* The amount of net unrealized built-in loss allocated to a departing member is equal to the remaining NUBIL balance, multiplied by a fraction. The numerator of the fraction is the amount of the built-in loss, taken into account on the change date under § 1.1502–91(g), in the assets held by the departing member immediately after the member ceases to be a member of the loss group (or loss subgroup). The denominator of the fraction is the sum of the numerator, plus the amount of the built-in loss, taken into account under § 1.1502–91(g) on the change date, in the assets held by the loss group (or loss subgroup) immediately after the close of the taxable year in which the departing member ceases to be a member. (Fluctuations in value of the assets between the change date and the date that the member ceases to be a member of the group (or loss subgroup), or the close of the taxable year in which the member ceases to be a member of the loss group, are disregarded.) Because the amount of built-in loss on the change date with respect to a departing member's assets is taken into account (rather than that member's separately computed net unrealized built-in loss

on the change date), a departing member can be apportioned all or part of the loss group's net unrealized built-in loss, even if the departing member had a separately computed net unrealized built-in gain on the change date. Amounts taken into account under section 382(h)(6)(C) (relating to certain deduction items) are treated as if they were assets in determining the numerator and denominator of the fraction.

(ii) *Transferred basis property and deferred gain or loss.* For purposes of paragraph (b)(2)(i) of this section, assets held by the departing member immediately after it ceases to be a member of the group (or by other members immediately after the close of the taxable year) include—

(A) Assets held at that time that are transferred basis property that was held by any member of the group (or loss subgroup) on the change date; and

(B) Assets held at that time by any member of the consolidated group with respect to which gain or loss of the group member or loss subgroup member at issue has been deferred in an intercompany transaction and has not been taken into account.

(iii) *Assets for which gain or loss has been recognized.* For purposes of paragraph (b)(2)(i) of this section, assets held by the departing member immediately after it ceases to be a member of the group (or by other members immediately after the close of the taxable year) do not include assets with respect to which gain or loss has previously been recognized and taken into account during the recognition period (including gain or loss recognized in an intercompany transaction and taken into account immediately before the member leaves the group). Appropriate adjustments must be made if gain or loss on an asset has been only partially recognized and taken into account.

(iv) *Exchanged basis property.* The rules of § 1.1502–91(h) apply for purposes of this paragraph (e) (disregarding stock received from the departing member or another member that is a member immediately after the close of the taxable year).

(v) *Two or more members depart during the same year.* If two or more members cease to be members during the same consolidated return year, appropriate adjustments must be made to the denominator of the fraction for each departing member by treating the other departing members as if they had not ceased to be members during that year and as if the assets held by those other departing members immediately after they cease to be members of the group (or loss subgroup) are assets held by the group immediately after the close of the taxable year.

(vi) *Anti-abuse rule.* If assets are transferred between members or a member ceases to be a member with a principal purpose of causing or affecting the allocation of amounts under this paragraph (e), appropriate adjustments must be made to eliminate any benefit of such acquisition, disposition, or allocation.

(3) *Effect of allocation on the consolidated group.* The amount of the net unrealized built-in loss that is allocated to the former member is treated as recognized built-in loss for a prior taxable year ending in the recognition period for purposes applying the limitation of section 382(h)(1)(B)(ii) to a loss group's (or loss subgroup's) recognition period taxable years beginning after the consolidated return year in which the former member ceases to be a member.

(4) *Effect on corporations to which the allocation is made.* For purposes of determining the amount of the former member's recognized built-in losses in any taxable year beginning after the former member ceases to be a member—

(i) The amount of the loss group's (or loss subgroup's) net unrealized built-in loss that is allocated to the former member is treated as if it were an amount of net unrealized built-in loss determined under section 382(h)(1)(B)(i)(without regard to the threshold of section 382(h)(3)(B)) with respect to such member or loss subgroup, and that amount is not reduced under section 382(h)(1)(B)(ii) by the loss group's (or loss subgroup's) recognized built-in losses;

(ii) The former member's 5 year recognition period begins on the loss group's (or loss subgroup's) change date;

(iii) In applying section 382(h)(1)(B)(ii), the former member

takes into account only its prior taxable years that begin after it ceases to be a member of the loss group (or loss subgroup); and

(iv) The former member's recognized built-in loss on the disposition of an asset is determined under section 382(h)(2)(B), treating references to the change date in that section as references to the loss group's (or loss subgroup's) change date.

(5) *Subgroup principles.* If two or more former members are members of the same consolidated group (the second group) immediately after they cease to be members of the current group, the principles of paragraphs (e)(1), (2) and (4) of this section apply to those former members on an aggregate basis. Thus, for example, the amount of net unrealized built-in loss allocated to those members is based on the assets held by those members immediately after they cease to be members of the current group and the limitation of section 382(h)(1)(B)(ii) on recognized built-in losses is applied by taking into account the aggregate amount of net unrealized built-in loss allocated to the former members and the aggregate recognized losses of those members in taxable years beginning after they cease to be members of the current group. If one or more of such members cease to be members of the second group, the principles of this paragraph (e) are applied with respect to those members to allocate to them all or part of any remaining unrecognized amount of net unrealized built-in loss allocated to the members that became members of the second group.

(6) *Apportionment of consolidated section 382 limitation (or subgroup section 382 limitation)*—(i) *In general.* For rules relating to the apportionment of a consolidated section 382 limitation (or subgroup section 382 limitation) to a former member, see paragraph (c) of this section.

(ii) *Special rule for former members that become members of the same consolidated group.* If recognized built-in losses of one or more former members would be subject to a consolidated section 382 limitation (or subgroup section 382 limitation) if recognized immediately before the member (or members) cease to be members of the group, an apportionment of that limitation may be made, under paragraph (c) of this section, to a loss subgroup that includes such member (or members), and the recognized built-in losses (if any) of that member (or members) will be subject to that apportioned limitation. If two or more of such former members are not included in a loss subgroup immediately after they cease to be members of the group (for example, because they do not have net operating loss carryovers or, in the aggregate, a net unrealized built-in loss), but are members of the same consolidated group, an apportionment of the consolidated section 382 limitation (or subgroup section 382 limitation) may be made to them as if they were a loss subgroup.

(7) *Examples.* The following examples illustrate the principles of this paragraph (e):

Example 1. Basic allocation case. (i) P owns all of the stock of L1 and L2. On September 4, Year 1, A purchases all of the P stock, causing an ownership change of the P group. On that date P has two assets (other than the L1 and L2 stock), asset 1 with an adjusted basis of $40 and a fair market value of $15 and asset 2 with an adjusted basis of $50 and a fair market value of $100. L1 has two assets, asset 3 , with a fair market value of $50 and an adjusted basis of $100, and asset 4, with an adjusted basis of $125 and a fair market value of $75. L2 has two assets, asset 5, with a fair market value of $150 and an adjusted basis of $100, and asset 6, with an adjusted basis of $90 and a fair market value of $40. Thus, the P loss group has a net unrealized built-in loss of $75.

(ii) On March 19, Year 3, P sells all of the L2 stock to M. At that time, asset 5, which has appreciated in value, has a fair market value of $250 and an adjusted basis of $100. Asset 6, which has declined in value, has an adjusted basis of $90 and a fair market value of $10.

(iii) On April 8, Year 3, P sells asset 1, and has a recognized built-in loss of $25 that is subject to the P group's section 382 limitation. On November 11, Year 4, L2 sells asset 6 for its then fair market value, $10, recognizing a loss of $80. On June 3, Year 5, L1 sells asset 4, recognizing a loss of $50.

(iv) Immediately after the close of Year 3, the P loss group's remaining NUBIL balance is $50 ($75 net unrealized built-in loss reduced by the $25 recognized built-in loss of P). The portion of the remaining NUBIL balance that is allocated to L2 is $17 (rounded to the nearest dollar). Seventeen dollars is the

product obtained by multiplying $50 (the remaining NUBIL balance) by $50/$150. The numerator of the fraction ($50) is the amount of built-in loss in asset 6, taken into account on the change date under § 1.1502–91(g). The denominator ($150) is the sum of the numerator ($50) and the amount of built-in loss in assets 3 and 4, taken into account on the change date under § 1.1502–91(g) ($100). The built-in loss in asset 1 is not included in the denominator of the fraction because it is not held by the P group immediately after the close of Year 3.

(v) Seventeen dollars of L2's $80 loss on the sale of asset 6 is a recognized built-in loss and subject to a section 382 limitation of zero, unless P apportions some or all of the P group's consolidated section 382 limitation to L2 (adjusted for a short taxable year, carryover of unused limitation, or any other adjustment required under section 382).

(vi) Thirty-three dollars of L1's $50 loss on the sale of asset 4 is subject to the P group's consolidated section 382 limitation, reduced by the amount of such limitation apportioned to L2, and adjusted for any short taxable year, a carryforward of unused limitation, or other adjustment. (In applying section 382(h)(1)(B)(ii) with respect to Year 5, the P group's net unrealized built-in loss is reduced by P's $25 recognized built-in loss in Year 3 and the $17 of net unrealized built-in loss allocated to L2, thus limiting the P group's recognized built-in loss in Year 5 to $33.)

Example 2. Two members depart in the same year. The facts are the same as in *Example 1,* except that P sells all of the stock of L1 to C on November 1, Year 3. The amount of net unrealized built-in loss apportioned to L2 (rounded to the nearest dollar) is $17 ($50 remaining NUBIL balance × $50/$150). The amount of net unrealized built-in loss apportioned to L1 (rounded to the nearest dollar) is $33 ($50 remaining NUBIL balance × $100/$150).

(8) *Reporting requirement.* If a net unrealized built-in loss is allocated under this paragraph (e), the common parent must file a statement with its income tax return for the taxable year in which the former member(s) (or a new loss subgroup that includes that member) ceases to be a member. The statement must provide the name and employer identification number (E.I.N.) of the departing member, the amount of remaining NUBIL balance for the taxable year in which the member departs, and the amount of the net unrealized built-in loss allocated to the departing member. The common parent must also deliver a copy of the statement to the former member on or before the day the group files its income tax return for the consolidated return year that the former member ceases to be a member. A copy of the statement must be attached to the first income tax return of the former member (or the first return in which the former member joins) that is filed after the close of the consolidated return year of the group of which the former member (or a new loss subgroup that includes that member) cease to be a member. This paragraph (e)(8) does not apply if the required information (other than the amount of remaining NUBIL balance) is included in a statement of election under paragraph (f) of this section (relating to apportioning a section 382 limitation).

(f) *Filing the election to apportion the section 382 limitation and net unrealized built-in gain*—(1) *Form of the election to apportion.* An election under paragraph (c) of this section must be made by the common parent. The election must be made in the form of the following statement: ''THIS IS AN ELECTION UNDER § 1.1502–95 OF THE INCOME TAX REGULATIONS TO APPORTION ALL OR PART OF THE [insert THE CONSOLIDATED SECTION 382 LIMITATION, THE SUBGROUP SECTION 382 LIMITATION, THE LOSS GROUP'S NET UNREALIZED BUILT-IN GAIN, THE LOSS SUBGROUP'S NET UNREALIZED BUILT-IN GAIN, as appropriate] TO [insert name and E.I.N. of the corporation (or the corporations that compose a new loss subgroup) to which allocation is made]''. The declaration must also include the following information, as appropriate—

(i) The date of the ownership change that resulted in the consolidated section 382 limitation (or subgroup section 382 limitation) or the loss group's (or loss subgroup's) net unrealized built-in gain;

(ii) The amount of the departing member's (or loss subgroup's) prechange net operating loss carryovers and the taxable years in which they arose that will be subject to the limitation that is being apportioned to that member (or loss subgroup);

(iii) The amount of any net unrealized built-in loss allocated to the departing member (or loss subgroup) under paragraph (e) of this section,

which, if recognized, can be a pre-change attribute subject to the limitation that is being apportioned;

(iv) If a consolidated section 382 limitation (or subgroup section 382 limitation) is being apportioned, the amount of the consolidated section 382 limitation (or subgroup section 382 limitation) for the taxable year during which the former member (or new loss subgroup) ceases to be a member of the consolidated group (determined without regard to any apportionment under this section);

(v) If any net unrealized built-in gain is being apportioned, the amount of the loss group's (or loss subgroup's) net unrealized built-in gain (as determined under paragraph (c) (2)(ii) of this section) that may be apportioned to members that ceased to be members during the consolidated return year;

(vi) The amount of the value element and adjustment element of the consolidated section 382 limitation (or subgroup section 382 limitation) that is apportioned to the former member (or new loss subgroup) pursuant to paragraph (c) of this section;

(vii) The amount of the loss group's (or loss subgroup's) net unrealized built-in gain that is apportioned to the former member (or new loss subgroup) pursuant to paragraph (c) of this section;

(viii) If the former member is allocated any net unrealized built-in loss under paragraph (e) of this section, the amount of any adjustment element apportioned to the former member that is attributable to recognized built-in gains (determined in a manner that will enable both the group and the former member to apply the principles of § 1.1502–93(c));

(ix) The name and E.I.N. of the common parent making the apportionment.

(2) *Signing of the election*. The election statement must be signed by both the common parent and the former member (or, in the case of a loss subgroup, the common parent and the loss subgroup parent) by persons authorized to sign their respective income tax returns. If the allocation is made to a loss subgroup for which an election under § 1.1502–91(d)(4) is made, and not separately to its members, the election statement under this paragraph (e) must be signed by the common parent and any member of the new loss subgroup by persons authorized to sign their respective income tax returns.

(3) *Filing of the election*. The election statement must be filed by the common parent of the group that is apportioning the consolidated section 382 limitation (or the subgroup section 382 limitation) or the loss group's net unrealized built-in gain (or loss subgroup's net unrealized built-in gain) with its income tax return for the taxable year in which the former member (or new loss subgroup) ceases to be a member. The common parent must also deliver a copy of the statement to the former member (or the members of the new loss subgroup) on or before the day the group files its income tax return for the consolidated return year that the former member (or new loss subgroup) ceases to be a member. A copy of the statement must be attached to the first return of the former member (or the first return in which the members of a new loss subgroup join) that is filed after the close of the consolidated return year of the group of which the former member (or the members of a new loss subgroup) ceases to be a member.

(4) *Revocation of election*. An election statement made under paragraph (c) of this section is revocable only with the consent of the Commissioner.

[T.D. 8824, 64 FR 36159, July 2, 1999]

§ 1.1502–96 Miscellaneous rules.

(a) *End of separate tracking of losses*—(1) *Application*. This paragraph (a) applies to a member (or a loss subgroup) with a net operating loss carryover that arose (or is treated under § 1.1502–21(c) as arising) in a SRLY, or a member (or loss subgroup) with a net unrealized built-in loss determined at the time that the member (or loss subgroup) becomes a member of the consolidated group if there is—

(i) An ownership change of the member (or loss subgroup) within six months before, on, or after becoming a member of the group; or

(ii) A period of 5 consecutive years following the day that the member (or loss subgroup) becomes a member of a group during which the member (or

loss subgroup) has not had an ownership change.

(2) *Effect of end of separate tracking*—(i) *Net operating loss carryovers.* If this paragraph (a) applies with respect to a member (or loss subgroup) with a net operating loss carryover, then, starting on the day after the earlier of the change date (but not earlier than the day the member (or loss subgroup) becomes a member of the consolidated group) or the last day of the 5 consecutive year period described in paragraph (a)(1)(ii) of this section, such loss carryover is treated as described in §1.1502–91(c)(1)(i). The preceding sentence also applies for purposes of determining whether there is an ownership change with respect to such loss carryover following such change date or 5 consecutive year period. Thus, for example, starting the day after the change date (but not earlier than the day the member (or loss subgroup) becomes a member of the consolidated group) or the end of the 5 consecutive year period—

(A) The consolidated group which includes the new loss member or loss subgroup is no longer required to separately track owner shifts of the stock of the new loss member or subgroup parent to determine if an ownership change occurs with respect to the loss carryover of the new loss member or members included in the loss subgroup;

(B) The group is a loss group because the member's loss carryover is treated as a loss described in §1.1502–91(c)(1)(i);

(C) There is an ownership change with respect to such loss carryover only if the group has an ownership change; and

(D) If the group has an ownership change, such loss carryover is a pre-change consolidated attribute subject to the loss group's consolidated section 382 limitation.

(ii) *Net unrealized built-in losses.* If this paragraph (a) applies with respect to a new loss member described in §1.1502–94(a)(1)(ii) (or a loss subgroup described in §1.1502–91(d)(2)) then, starting on the day after the earlier of the change date (but not earlier than the day the member (or loss subgroup) becomes a member of the group) or the last day of the 5 consecutive year period described in paragraph (a)(1)(ii) of this section, the member (or members of the loss subgroup) are treated, for purposes of applying §1.1502–91(g)(2)(ii), as if they have been affiliated with the common parent for 5 consecutive years. Starting on that day, the member's (or the members of the loss subgroup's) separately computed net unrealized built-in loss is included in the determination whether the group has a net unrealized built-in loss, and there is an ownership change with respect to the member's separately computed net unrealized built-in loss only if the group (including the member) has a net unrealized built-in loss and has an ownership change. Thus, for example, starting the day after the change date (but not earlier than the day the member (or loss subgroup) becomes a member of the consolidated group), or the end of the 5 consecutive period

(A) The consolidated group which includes the new loss member or loss subgroup is no longer required to separately track owner shifts of the stock of the new loss member or subgroup parent to determine if an ownership change occurs with respect to the net unrealized built-in loss of the new loss member or members of the loss subgroup;

(B) The group includes the member's (or the loss subgroup members') separately computed net unrealized built-in loss in determining whether it is a loss group under §1.1502–91(c)(1)(iii);

(C) There is an ownership change with respect to such net unrealized built-in loss only if the group is a loss group and has an ownership change; and

(D) If the group has an ownership change, the member's separately computed net unrealized built-in loss and its assets are taken into account in determining the group's pre-change consolidated attributes described in §1.1502–91(e)(1) (relating to recognized built-in losses) that are subject to the group's consolidated section 382 limitation.

(iii) *Common parent not common parent for five years.* If the common parent has become the common parent of an existing group within the previous 5-year period in a transaction described in §1.1502–75(d)(2)(ii) or (3), appropriate adjustments must be made in applying

paragraphs (a)(2)(ii) and (3) of this section. In such a case, as the context requires, references to the common parent are to the former common parent.

(3) *Continuing effect of end of separate tracking*—(i) *In general.* As the context may require, a current group determines which of its members are included in a loss subgroup on any testing date by taking into account the application of this section in the former group. See the example in § 1.1502–91(f)(2). For this purpose, corporations that are treated under paragraph (a)(2)(ii) of this section as having been affiliated with the common parent of the former group for 5 consecutive years are also treated as having been affiliated with any other members that have been (or are treated as having been) affiliated with the common parent. The corporations are treated as having been affiliated with such other members for the same period of time that those members have been (or are treated as having been) affiliated with the common parent. If two or more corporations become members of the group at the same time, but paragraph (a)(1) of this section does not apply to every such corporation, then immediately after the corporations become members of the group, the corporations to which paragraph (a)(1) of this section applied are treated as not having been previously affiliated, for purposes of applying this paragraph (a)(3), with the corporations to which paragraph (a)(2)(ii) of this section did not apply.

(ii) *Example.* The following example illustrates the principles of this paragraph (a)(3):

Example. (i) L has owned all the stock of L1 for three years. At the close of December 31, Year 1, the M group purchases all the L stock, and L and L1 become members of the M group. Other than the stock of L1, L has one asset (the L loss asset) with a net unrealized built-in loss of $200 on this date. L1 has one asset with a net unrealized built-in gain of $50 (the L1 gain asset). L and L1 do not compose a loss subgroup because they do not meet the five year affiliation requirement of § 1.1502–91(d)(2)(i). L is a new loss member, and M's purchase of L causes an ownership change of L. At the close of December 31, Year 4, at a time when L1 has been affiliated with the M group for three years and has been affiliated with L for six years, the S group purchases all the M stock. On this date, the L loss asset has a net unrealized built-in loss of $300, the L1 gain asset has a net unrealized built-in gain of $80, and M, the common parent of the M group, has one asset with a net unrealized built-in gain of $200.

(ii) Paragraph (a)(1) of this section applies to L because L is a new loss member described in § 1.1502–94(a)(1)(ii) that has an ownership change upon becoming a member of the M group on December 31, Year 1. Accordingly, L is treated as having been affiliated with M for 5 consecutive years, and the L loss asset with a net unrealized built-in loss of $300 is included in the determination whether the M group has a net unrealized built-in loss.

(iii) The S group determines which of its members are included in a loss subgroup by taking into account application of paragraph (a) of this section in the M group. For this purpose, application of paragraph (a) of this section causes L to be treated as having been affiliated with M (or as having been a member of the M group) for 5 consecutive years as of January 1, Year 2. Therefore, the S group includes L in the determination whether the M subgroup acquired by S on December 31, Year 4, has a net unrealized built-in loss.

(iv) Because paragraph (a)(1) of this section applied to L when L became a member of the M group, but did not apply to L1, L is treated as not having been affiliated with L1 before L and L1 joined the M group. Also, L1 is not included in the determination whether the M subgroup has a net unrealized built-in loss because L1 has not been continuously affiliated with members of the M group for the five consecutive year period ending immediately before they become members of the S group. See § 1.1502–91(g)(2).

(4) *Special rule for testing period.* For purposes of determining the beginning of the testing period for a loss group, the member's (or loss subgroup's) net operating loss carryovers (or net unrealized built-in loss) described in paragraph (a)(2) of this section are considered to arise—

(i) In a case described in paragraph (a)(1)(i) of this section, in a taxable year that begins not earlier than the later of the day following the change date or the day that the member becomes a member of the group; and

(ii) In a case described in paragraph (a)(1)(ii) of this section, in a taxable year that begins 3 years before the end of the 5 consecutive year period.

(5) *Limits on effects of end of separate tracking.* The rule contained in this paragraph (a) applies solely for purposes of §§ 1.1502–91 through 1.1502–95 and this section (other than paragraph

(b)(2)(ii)(B) of this section (relating to the definition of pre-change attributes of a subsidiary)) and § 1.1502–98, and not for purposes of other provisions of the consolidated return regulations. However, the rule contained in this paragraph (a) does apply in §§ 1.1502–15(g), 1.1502–21(g) and 1.1502–22(g) for purposes of determining the composition of loss subgroups defined in § 1.1502–91(d). See also paragraph (c) of this section for the continuing effect of an ownership change with respect to pre-change attributes.

(b) *Ownership change of subsidiary*—(1) *Ownership change of a subsidiary because of options or plan or arrangement.* Notwithstanding § 1.1502–92, a subsidiary may have an ownership change for purposes of section 382 with respect to its attributes which a group or loss subgroup includes in making a determination under § 1.1502–91(c)(1) (relating to the definition of loss group) or § 1.1502–91(d) (relating to the definition of loss subgroup). The subsidiary has such an ownership change if it has an ownership change under the principles of § 1.1502–95(b) and section 382 and the regulations thereunder (determined on a separate entity basis by treating the subsidiary as not being a member of a consolidated group) in the event of—

(i) The deemed exercise under § 1.382–4(d) of an option or options (other than an option with respect to stock of the common parent) held by a person (or persons acting pursuant to a plan or arrangement) to acquire more than 20 percent of the stock of the subsidiary; or

(ii) An increase by 1 or more 5-percent shareholders, acting pursuant to a plan or arrangement to avoid an ownership change of a subsidiary, in their percentage ownership interest in the subsidiary by more than 50 percentage points during the testing period of the subsidiary through the acquisition (or deemed acquisition pursuant to § 1.382–4(d)) of ownership interests in the subsidiary and in higher-tier members with respect to the subsidiary.

(2) *Effect of the ownership change*—(i) *In general.* If a subsidiary has an ownership change under paragraph (b)(1) of this section, the amount of consolidated taxable income for any post-change year that may be offset by the pre-change losses of the subsidiary shall not exceed the section 382 limitation for the subsidiary. For purposes of this limitation, the value of the subsidiary is determined solely by reference to the value of the subsidiary's stock.

(ii) *Pre-change losses.* The pre-change losses of a subsidiary are—

(A) Its allocable part of any consolidated net operating loss which is attributable to it under § 1.1502–21(b) (determined on the last day of the consolidated return year that includes the change date) that is not carried back and absorbed in a taxable year prior to the year including the change date;

(B) Its net operating loss carryovers that arose (or are treated under § 1.1502–21(c) as having arisen) in a SRLY; and

(C) Its recognized built-in loss with respect to its separately computed net unrealized built-in loss, if any, determined on the change date.

(3) *Coordination with §§ 1.1502–91, 1.1502–92, and 1.1502–94.* If an increase in percentage ownership interest causes an ownership change with respect to an attribute under this paragraph (b) and under § 1.1502–92 on the same day, the ownership change is considered to occur only under § 1.1502–92 and not under this paragraph (b). See § 1.1502–94 for anti-duplication rules relating to value.

(4) *Example.* The following example illustrates paragraph (b)(1)(ii) of this section:

Example. Plan to avoid an ownership change of a subsidiary. (i) L owns all the stock of L1, L1 owns all the stock of L2, L2 owns all the stock of L3, and L3 owns all the stock of L4. The L group has a consolidated net operating loss arising in Year 1 that is carried over to Year 2. L has assets other than its L1 stock with a value of $900. L1, L2, and L3 own no assets other than their L2, L3, and L4 stock. L4 has assets with a value of $100. During Year 2, A, B, C, and D, acting pursuant to a plan to avoid an ownership change of L4, acquire the following ownership interests in the members of the L loss group: (A) on September 11, Year 2, A acquires 20 percent of the L1 stock from L and B acquires 20 percent of the L2 stock from L1; and (B) on September 20, Year 2, C acquires 20 percent of the stock of L3 from L2 and D acquires 20 percent of the stock of L4 from L3.

(ii) The acquisitions by A, B, C, and D pursuant to the plan have increased their respective percentage ownership interests in L4 by approximately 10, 13, 16, and 20 percentage points, for a total of approximately 59 percentage points during the testing period. This more than 50 percentage point increase in the percentage ownership interest in L4 causes an ownership change of L4 under paragraph (b)(2) of this section.

(c) *Continuing effect of an ownership change.* A loss corporation (or loss subgroup) that is subject to a limitation under section 382 with respect to its pre-change losses continues to be subject to the limitation regardless of whether it becomes a member or ceases to be a member of a consolidated group. See §1.382–5(d) (relating to successive ownership changes and absorption of a section 382 limitation).

(d) *Losses reattributed under §1.1502–20(g)*—(1) *In general.* This paragraph (d) contains rules relating to net operating carryovers that are reattributed to the common parent under §1.1502–20(g). References in this paragraph (d) to a subsidiary are references to the subsidiary (or lower tier subsidiary) whose net operating loss carryover is reattributed to the common parent.

(2) *Deemed section 381(a) transaction.* Under §1.1502–20 (g)(1), the common parent succeeds to the reattributed losses as if the losses were succeeded to in a transaction described in section 381(a). In general, §§1.1502–91 through 1.1502–95, this section, and §1.1502–98 are applied to the reattributed net operating loss carryovers in accordance with that characterization. See generally, §1.382–2(a)(1)(ii) (relating to distributor or transferor loss corporations in transactions under section 381), §1.1502–(1)(f)(4) (relating to the definition of predecessor and successor) and §1.1502–91(j) (relating to predecessor and successor corporations). For example, if the reattributed net operating loss carryover is a pre-change attribute subject to a section 382 limitation, it remains subject to that limitation following the reattribution. In certain cases, the limitation applicable to the reattributed loss is zero unless the common parent apportions all or part of the limitation to itself. (See paragraph (d)(4) of this section.)

(3) *Rules relating to owner shifts*—(i) *In general.* Any owner shift of the subsidiary (including any deemed owner shift resulting from section 382(g)(4)(D) or 382(l)(3)) in connection with the disposition of the stock of the subsidiary is not taken into account in determining whether there is an ownership change with respect to the reattributed net operating loss carryover. However, any owner shift with respect to the successor corporation that is treated as continuing in existence under §1.382–2(a)(1)(ii) must be taken into account for such purpose if such owner shift is effected by the reattribution and an owner shift of the stock of the subsidiary not held directly or indirectly by the common parent would have been taken into account if such shift had occurred immediately before the reattribution. See paragraph (d)(3)(ii) *Example 2* of this section.

(ii) *Examples.* The following examples illustrate the principles of this paragraph (d)(3):

Example 1. No owner shift for reattributed loss. (i) P, the common parent of a consolidated group, owns 60% of the stock of L, and B owns the remaining 40%. L has a net operating loss carryover of $100 from year 1 that it carries over to Years 2, 3, and 4. At the beginning of Year 2, P purchases 40% of the L stock from B, which does not cause an ownership change of L. On December 31, Year 3, P sells all of the L stock to M. Pursuant to §1.1502–20(g), P reattributes $10 of L's $100 net operating loss carryover to itself, and L carries $90 of its net operating loss carryover to its Year 4.

(ii) The sale of the L stock to M does not cause an owner shift that is taken into account in determining if there is an ownership change with respect to the $10 reattributed loss. Following the reattribution, §1.1502–94(b) continues to apply to determine if there is an ownership change with respect to the $10 reattributed loss, until, under paragraph (a) of this section, the loss is treated as described in §1.1502–91(c)(1)(i). In applying §1.1502–94(b), the 40 percentage point increase by the P shareholders prior to the reattribution is taken into account. The sale of the L stock to M does cause an ownership change of L with respect to the $90 of its net operating loss that it carries over to Year 4.

Example 2. Owner shift for reattributed loss. The facts are the same as in *Example 1,* except that P only purchases 20% of the L stock from B and sells 80% of the L stock to M. L is a new loss member, and, under §1.1502–94(b)(1), an owner shift of the stock of L not held directly or indirectly by the common parent (the 20% of L stock still held by B) would have been taken into account if

such shift had occurred immediately before the reattribution. Following the reattribution, § 1.1502–94(b) continues to apply to determine if there is an ownership change with respect to the $10 reattributed loss, until, under paragraph (a) of this section, the loss is treated as described in § 1.1502–91(c)(1)(i). With respect to the $10 reattributed loss, the P shareholders have increased their percentage ownership interest by 40 percentage points. The P shareholders have increased their ownership interests by 20 percentage points as a result of P's purchase of stock from B, and, under § 1.382–2(a)(1)(ii), are treated as increasing their interests by an additional 20 percentage points as a result of the reattribution. (The acquisition of the L stock by M does not, however, effect an owner shift for the $10 of reattributed loss.) The sale of the L stock to M causes an ownership change of L with respect to the $90 of net operating loss that L carries over to Year 4.

(4) *Rules relating to the section 382 limitation*—(i) *Reattributed loss is a pre-change separate attribute of a new loss member.* If the reattributed net operating loss carryover is a pre-change separate attribute of a new loss member that is subject to a separate section 382 limitation prior to the disposition of subsidiary stock, the common parent's limitation with respect to that loss is zero, except to the extent that the common parent apportions to itself, under paragraph (d)(5) of this section, all or part of such limitation. A separate section 382 limitation is the limitation described in § 1.1502–94(b) that applies to a pre-change separate attribute.

(ii) *Reattributed loss is a pre-change subgroup attribute.* If the reattributed net operating loss carryover is a pre-change subgroup attribute subject to a subgroup section 382 limitation prior to the disposition of subsidiary stock, and, immediately after the reattribution, the common parent is not a member of the loss subgroup, the section 382 limitation with respect to that net operating loss carryover is zero, except to the extent that the common parent apportions to itself, under paragraph (d)(5) of this section, all or part of the subgroup section 382 limitation. See, however, § 1.1502–95(d)(3) *Example 6,* for an illustration of a case where the common parent, as successor to the subsidiary, is a member of the loss subgroup immediately after the reattribution.

(iii) *Potential application of section 382(l)(1).* In general, the value of the stock of the common parent is used to determine the section 382 limitation for an ownership change with respect to the reattributed net operating loss carryover that occurs at the time of, or after, the reattribution. For example, if the net operating loss carryover is a pre-change consolidated attribute, the value of the stock of the common parent is used to determine the section 382 limitation, and no adjustment to that value is required because of the deemed section 381(a) transaction. However, if the net operating loss carryover is a pre-change separate attribute of a new loss member (or is a pre-change attribute of a loss subgroup member and the common parent was not the loss subgroup parent immediately before the reattribution), the deemed section 381(a) transaction is considered to constitute a capital contribution with respect to the new loss member (or loss subgroup member) for purposes of section 382(l)(1). Accordingly, if that section applies because the deemed capital contribution is (or is considered under section 382(l)(1)(B) to be) part of a plan described in section 382(l)(1)(A), the value of the stock of the common parent after the deemed section 381(a) transaction must be adjusted to reflect the capital contribution. Ordinarily, this will require the value of the stock of the common parent to be reduced to an amount that represents the value of the stock of the subsidiary (or loss subgroup of which the subsidiary was a member) when the reattribution occurred.

(iv) *Duplication or omission of value.* In determining any section 382 limitation with respect to the reattributed net operating loss carryover and with respect to other pre-change losses, appropriate adjustments must be made so that value is not improperly omitted or duplicated as a result of the reattribution. For example, if the subsidiary has an ownership change upon its departure, and the common parent (as successor) has an ownership change with respect to the reattributed pre-change separate attribute upon its reattribution under paragraph (d)(3)(i) of this

section, proper adjustments must be made so that the value of the subsidiary is not taken into account more than once in determinining the section 382 limitation for the reattributed loss and the loss that is not reattributed.

(v) *Special rule for continuity of business requirement.* If the reattributed net operating loss carryover is a pre-change attribute of new loss member and the reattribution occurs within the two year period beginning on the change date, then, starting immediately after the reattribution, the continuity of business requirement of section 382(c)(1) is applied with respect to the business enterprise of the common parent. Similar principles apply if the reattributed net operating loss carryover is a pre-change subgroup attribute and, on the day after the reattribution, the common parent is not a member of the loss subgroup.

(5) *Election to reattribute section 382 limitation*—(i) *Effect of election.* The common parent may elect to apportion to itself all or part of any separate section 382 limitation or subgroup section 382 limitation to which the net operating loss carryover is subject immediately before the reattribution. However, no net unrealized built-in gain of the member (or loss subgroup) whose net operating loss carryover is reattributed can be apportioned to the common parent. The principles of § 1.1502–95(c) apply to the apportionment, treating, as the context requires, references to the former member as references to the common parent, and references to the consolidated section 382 limitation as references to the separate section 382 limitation (or subgroup section 382 limitation) that is being apportioned. Thus, for example, the common parent can reattribute to itself all or part of the value element or adjustment element of the limitation, and any part of such element that is apportioned requires a corresponding reduction in such element of the separate section 382 limitation of the subsidiary whose net operating loss carryover is reattributed (or in the subgroup section 382 limitation if the reattributed loss is a pre-change subgroup attribute). Appropriate adjustments must be made to the separate section 382 limitation (or subgroup section 382 limitation) for the consolidated return year in which the reattribution is made to reflect that the reattributed net operating loss carryover is an attribute acquired by the common parent during the year in a transaction to which section 381(a) applies. The election is made by the common parent as part of the election to reattribute the net operating loss carryover. See § 1.1502–20(g)(4) for the time and manner of making the election.

(ii) *Examples.* The following examples illustrate the principles of this paragraph (d)(5):

Example 1. Consequence of apportionment. (i) P, the common parent of a consolidated group, purchases all of the stock of L on December 31, Year 1. L carries over a net operating loss arising in Year 1 to each of the next 5 taxable years. The purchase of the L stock causes an ownership change of L, and results in a separate section 382 limitation of $10 for L's net operating loss carryover based on the value of the L stock. On July 2, Year 3, P sells 30 percent of the L stock to A. Under § 1.1502–20(g), P elects to apportion to itself $110 of L's $200 net operating loss carryover. P also elects to apportion to itself $6 of the $10 value element of the separate section 382 limitation.

(ii) For the consolidated return years ending after December 31, Year 3, P's separate section 382 limitation with respect to the reattributed net operating loss carryover is $6, adjusted as appropriate for any short taxable year, unused section 382 limitation, or other adjustment. For the P group's consolidated return year ending December 31, Year 3, the separate section 382 limitation for L's net operating loss carryover is $8, the sum of $5 and $3. Five dollars of the limitation is the amount that bears the same relationship to $10 as the number of days in the period ending with the deemed section 381(a) transaction, 183 days, bears to 365. Three dollars of the limitation is the amount that bears the same relationship to $6 as the number of days in the period between July 3 and December 31, 182, bears to 365.

(iii) For L's taxable years ending after December 31, Year 3, L's separate section 382 limitation for its $90 of net operating loss carryover that was not reattributed to P is $4, adjusted as appropriate for any short taxable year, unused section 382 limitation, or other adjustment. For L's short taxable year ending December 31, Year 3, the section 382 limitation for its $90 of net operating loss carryover is $2, the amount that bears the same relationship to $4 (the portion of the value element that was not apportioned to P), as the number of days during the short

taxable year, 182 days, bears to 365. See § 1.382–5(c).

Example 2. No apportionment required for consolidated pre-change attribute. (i) P, the common parent of a consolidated group, forms L. For Year 1, L has an operating loss of $70 that is not absorbed and is included in the group's consolidated net operating loss that is carried over to subsequent years. On January 1 of Year 3, A buys all of the P stock and the P group has an ownership change. The consolidated section 382 limitation based on the value of the P stock is $10.

(ii) On April 13 of Year 4, P sells all of the stock of L to B and, under § 1.1502–20(g), elects to reattribute to itself $45 of L's net operating loss carryover. Following the reattribution, the $45 portion of the Year 1 net operating loss carryover retains its character as a pre-change consolidated attribute, and remains subject to so much of the $10 consolidated section 382 limitation as P does not elect to apportion to L under § 1.1502–95(c).

(e) *Time and manner of making election under § 1.1502–91(d)(4)*—(1) *In general.* This paragraph (e) prescribes the time and manner of making the election under § 1.1502–91(d)(4), relating to treating two or more corporations as treating the section 1504(a)(1) requirement of § 1.1502–91(d)(1)(ii) and (d)(2)(ii) as satisfied.

(2) *Election statement.* An election under § 1.1502–91(d)(4) must be made by the common parent. The election must be made in the form of the following statement: ''THIS IS AN ELECTION UNDER § 1.1502–91(d)(4) TO TREAT THE FOLLOWING CORPORATIONS AS MEETING THE REQUIREMENTS OF § 1.1502–91 (d)(1)(ii) AND (d)(2)(ii) IMMEDIATELY AFTER THEY BECAME MEMBERS OF THE GROUP.'' [List separately the name of each corporation, its E.I.N., and the date that it became a member of the group]. If separate elections are being made for corporations that became members at different times or that were acquired from different affiliated groups, provide a separate statement and list for each election.

(3) The election statement must be filed by the common parent with its income tax return for the consolidated return year in which the members with respect to which the election is made become members of the group. Such election must be filed on or before the due date for such income tax return, including extensions.

(4) An election made under this paragraph (e) is irrevocable.

[T.D. 8824, 64 FR 36170, July 2, 1999]

§ 1.1502–97 Special rules under section 382 for members under the jurisdiction of a court in a title 11 or similar case. [Reserved]

§ 1.1502–98 Coordination with section 383.

The rules contained in §§ 1.1502–91 through 1.1502–96 also apply for purposes of section 383, with appropriate adjustments to reflect that section 383 applies to credits and net capital losses. For example, subgroups with respect to the carryover of general business credits, minimum tax credits, unused foreign tax, and net capital loss are determined by applying the principles of § 1.1502–91(d)(1). Similarly, in the case of net capital losses, general business credits, and excess foreign taxes that are pre-change attributes, § 1.383–1 applies the principles of §§ 1.1502–91 through 1.1502–96. For example, if a loss group has an ownership change under § 1.1502–92 and has a carryover of unused general business credits from a pre-change consolidated return year to a post-change consolidated return year, the amount of the group's regular tax liability for the post-change year that can be offset by the carryover cannot exceed the consolidated section 383 credit limitation for that post-change year, determined by applying the principles of §§ 1.383–1(c)(6) and 1.1502–93 (relating to the computation of the consolidated section 382 limitation).

[T.D. 8824, 64 FR 36174, July 2, 1999, as amended by T.D. 8884, 65 FR 33760, May 25, 2000]

§ 1.1502–99 Effective dates.

(a) *In general.* Except as provided in paragraphs (b) and (c) of this section, §§ 1.1502–91 through 1.1502–96 and § 1.1502–98 apply to any testing date on or after June 25, 1999. Sections 1.1502–94 through 1.1502–96 also apply to a corporation that becomes a member of a group or ceases to be a member of a group (or loss subgroup) on any date on or after June 25, 1999.

(b) *Special rules*—(1) *Election to treat subgroup parent requirement as satisfied.* Section 1.1502–91(d)(4), § 1.1502–91(d)(7), Example 4, § 1.1502–92(b)(1)(iii), § 1.1502–92(b)(2), Example 5, the last two sentences of § 1.1502–95(b)(3), § 1.1502–95(d)(2)(i), and § 1.1502–96(e)(all of which relate to the election under § 1.1502–91(d)(4) to treat the loss subgroup parent requirement as satisfied) apply to corporations that become members of a consolidated group in taxable years for which the due date of the income tax return (without extensions) is after June 25, 1999.

(2) *Principal purpose of avoiding a limitation.* The third sentence of § 1.1502–91(d)(5) (relating to members excluded from a loss subgroup) applies to corporations that become members of a consolidated group on or after June 25, 1999.

(3) *Ceasing to be a member of a loss subgroup*—(i) *Ownership change of a loss subgroup.* Section 1.1502–95(d)(2)(ii) and § 1.1502–95(d)(3), Example 3 apply to corporations that cease to bear a relationship described in section 1504(a)(1) to a loss subgroup parent in taxable years for which the due date of the income tax return (without extensions) is after June 25, 1999.

(ii) *Expiration of 5-year period.* Section 1.1502–95(d)(2)(iii) applies with respect to the day after the last day of any 5 consecutive year period described in that section that ends in a taxable year for which the due date of the income tax return (without extensions) is after June 25, 1999.

(4) *Reattribution of net operating loss carryovers under § 1.1502–20(g).* Section 1.1502–96(d) applies to reattributions of net operating loss carryovers (or capital loss carryovers) in taxable years for which the due date of the income tax return (without extensions) is after June 25, 1999; except that the election under § 1.1502–96(d)(5) (relating to an election to reattribute section 382 limitation) can be made with any election under § 1.1502–20(g)(4) to reattribute to the common parent a net operating loss or net capital loss that is timely filed on or after June 25, 1999.

(5) *Election to apportion net unrealized built-in gain.* In the case of corporations that cease to be members of a loss group (or loss subgroup) before June 25, 1999 in a taxable year for which the due date of the income tax return (without extensions) is after June 25, 1999, § 1.1502–95(a), (b), (c), and (f) apply to those corporations if the common parent makes the election described in the second sentence of paragraph (c)(1) of § 1.1502–95 in the time and manner prescribed in paragraph (f) of § 1.1502–95.

(c) *Testing period may include a period beginning before June 25, 1999*—

(1) *In general.* A testing period for purposes of §§ 1.1502–91 through 1.1502–96 and 1.1502–98 may include a period beginning before June 25, 1999. Thus, for example, in applying § 1.1502–92(b)(1)(i)(relating to the determination of an ownership change of a loss group), the determination of the lowest percentage of ownership interest of any 5-percent shareholder of the common parent during a testing period ending on a testing date occurring on or after June 25, 1999 takes into account the period beginning before June 25, 1999, except to the extent that the period is more than 3 years before the testing date or is otherwise before the beginning of the testing period. See § 1.1502–92(b)(1).

(2) *Transition rule for net unrealized built-in loss.* A loss group (or loss subgroup) that has a net unrealized built-in loss on a testing date on or after June 25, 1999 may apply § 1.1502–91A(g) (and § 1.1502–96A(a) as it relates to § 1.1502–91A(g)) for the period ending on the day before June 25, 1999 to determine under § 1.382–2T(d)(ii)(A) the earliest date that its testing period begins (treating the day before June 25, 1999 as the end of a taxable year.) Thus, for example, if a consolidated group with no net operating losses has a net unrealized built-in loss determined under § 1.1502–91(g) on a testing date after June 25, 1999, but, under § 1.1502–91A(g), does not have a net unrealized built-in loss for the period ending on the day before June 25, 1999, the group's testing period begins no earlier than June 25, 1999.

[T.D. 8824, 64 FR 36174, July 2, 1999]

§ 1.1502–100 Corporations exempt from tax.

(a) *In general*—(1) *Computation of tax liability.* The tax liability for a consolidated return year of a group of two or

more corporations described in section 1504(e) which are exempt from taxation under section 501 (hereinafter referred to in this section as ''exempt group'') shall be determined on a consolidated basis by applying the provisions of subchapter F of chapter 1 of the code in the manner provided in this section. See section 1504(e) for tax-exempt corporations eligible to file a consolidated return.

(2) *Applicability of other consolidated return provisions.* The provisions of § 1.1502–1 through § 1.1502–80 shall be applicable to an exempt group to the extent they are not inconsistent with the provisions of this section or the provisions of subchapter F of chapter 1 of the Code. For purposes of applying the provisions of § 1.1502–1 through § 1.1502–80 to an exempt group, the following substitutions shall be made:

(i) The term ''exempt group'' shall be substituted for the term ''group'',

(ii) The terms ''unrelated business taxable income'', ''separate unrelated business taxable income'', and ''consolidated unrelated business taxable income'' shall be substituted for the terms ''taxable income'', ''separate taxable income'', and ''consolidated taxable income'', and

(iii) The term ''consolidated liability for tax determined under § 1.1502–2'' (or an equivalent term) shall mean the consolidated liability for tax of an exempt group determined under paragraph (b) of this section.

(b) *Consolidated liability for tax.* The tax liability for a consolidated return year of an exempt group is the tax imposed by section 511(a) or section 1201(a) on the consolidated unrelated business taxable income for the year (determined under paragraph (c) of this section), and by allowing the credits and surtax exemption provided in § 1.1502–2.

(c) *Consolidated unrelated business taxable income.* The consolidated unrelated business taxable income for a consolidated return year shall be determined by taking into account:

(1) The separate unrelated business taxable income of each member of the exempt group (determined under paragraph (d) of this section);

(2) Any consolidated net operating loss deduction (determined under § 1.1502–21A or 1.1502–21 (as appropriate) subject to the limitations provided in section 512(b)(6);

(3) Any consolidated charitable contribution deduction (determined under § 1.1502–24) subject to the limitations provided in section 512(b)(10); and

(4) Any consolidated net gain or net loss from the disposition of debt-financed property (as defined in section 514(b)) taken into account as provided by section 514(a), or from the cutting of timber to which section 631 applies.

(d) *Separate unrelated business taxable income.* The separate unrelated business taxable income of a member of an exempt group shall be computed in accordance with the provisions of section 512 covering the determination of unrelated business taxable income of separate corporations, except that:

(1) The provisions of paragraphs (a) through (k) and (o) of § 1.1502–12 shall apply; and

(2) No charitable contributions deduction shall be taken into account under section 512(b)(10).

See sections 511(c) and 512(a)(3)(C) for special rules applicable to organizations described in section 501(c)(2).

[T.D. 7595, 44 FR 10382, Feb. 20, 1979, as amended by T.D. 8677, 61 FR 33325, June 27, 1996; T.D. 8823, 64 FR 36101, July 2, 1999]

§ 1.1503–1 Computation and payment of tax.

(a) *General rule.* In any case in which a consolidated return is filed or required to be filed, the tax shall be determined, computed, assessed, collected, and adjusted in accordance with the regulations prescribed under section 1502 promulgated prior to the last date prescribed by law for the filing of such return.

(b) *Limitation.* If the affiliated group includes one or more Western Hemisphere trade corporations (as defined in section 921) or one or more regulated public utilities (as defined in section 1503 (c)), the increase in tax described in section 1503 (a) shall be applied in a manner provided in the regulations under section 1502.

[T.D. 6500, 25 FR 12105, Nov. 26, 1960, as amended by T.D. 7244, 37 FR 28897, Dec. 30, 1972]

§ 1.1503–2 Dual consolidated loss.

(a) *Purpose and scope.* This section provides rules for the application of section 1503(d), concerning the determination and use of dual consolidated losses. Paragraph (b) of this section provides a general rule prohibiting a dual consolidated loss from offsetting the taxable income of a domestic affiliate. Paragraph (c) of this section provides definitions of the terms used in this section. Paragraph (d) of this section provides rules for calculating the amount of a dual consolidated loss and for adjusting the basis of stock of a dual resident corporation. Paragraph (e) of this section contains an anti-avoidance provision. Paragraph (f) of this section applies the rules of paragraph (d) of this section to the computation of foreign tax credit limitations. Paragraph (g) of this section provides certain exceptions to the limitation rule of paragraph (b) of this section. Finally, paragraph (h) of this section provides the effective date of the regulations and a provision for the retroactive application of the regulations to qualifying taxpayers.

(b) *In general*—(1) *Limitation on the use of a dual consolidated loss to offset income of a domestic affiliate.* Except as otherwise provided in this section, a dual consolidated loss of a dual resident corporation cannot offset the taxable income of any domestic affiliate in the taxable year in which the loss is recognized or in any other taxable year, regardless of whether the loss offsets income of another person under the income tax laws of a foreign country and regardless of whether the income that the loss may offset in the foreign country is, has been, or will be subject to tax in the United States. Pursuant to paragraph (c) (1) and (2) of this section, the same limitation shall apply to a dual consolidated loss of a separate unit of a domestic corporation as if the separate unit were a wholly owned subsidiary of such corporation.

(2) *Limitation on the use of a dual consolidated loss to offset income of a successor-in-interest.* A dual consolidated loss of a dual resident corporation also cannot be used to offset the taxable income of another corporation by means of a transaction in which the other corporation succeeds to the tax attributes of the dual resident corporation under section 381 of the Code. Similarly, a dual consolidated loss of a separate unit of a domestic corporation cannot be used to offset income of the domestic corporation following the termination, liquidation, sale, or other disposition of the separate unit. However, if a dual resident corporation transfers its assets to another corporation in a transaction subject to section 381, and the acquiring corporation is a dual resident corporation of the same foreign country of which the transferor dual resident corporation is a resident, or a domestic corporation that carries on the business activities of the transferor dual resident corporation as a separate unit, then income generated by the transferee dual resident corporation, or separate unit, may be offset by the carryover losses of the transferor dual resident corporation. In addition, if a domestic corporation transfers a separate unit to another domestic corporation in a transaction subject to section 381, the income generated by the separate unit following the transfer may be offset by the carryover losses of the separate unit.

(3) *Application of rules to multiple tiers of separate units.* If a separate unit of a domestic corporation is owned indirectly through another separate unit, the principles of paragraph (b) (1) and (2) of this section shall apply as if the upper-tier separate unit were a subsidiary of the domestic corporation and the lower-tier separate unit were a lower-tier subsidiary.

(4) *Examples.* The following examples illustrate the application of this paragraph (b).

Example 1. P, a domestic corporation, owns all of the outstanding stock of DRC, a domestic corporation. P and DRC file a consolidated U.S. income tax return. DRC is managed and controlled in Country W, a country that determines the tax residence of corporations according to their place of management and control. Therefore, DRC is a dual resident corporation and any net operating loss it incurs is a dual consolidated loss. In Years 1 through 3, DRC incurs dual consolidated losses. Under this paragraph (b), the dual consolidated losses may not be used to offset P's income on the group's consolidated U.S. income tax return. At the end of Year 3, DRC sells all of its assets and discontinues its business operations. DRC is then liquidated into P, pursuant to the provisions of

section 332. Normally, under section 381, P would succeed to, and be permitted to utilize, DRC's net operating loss carryovers. However, this paragraph (b) prohibits the dual consolidated losses of DRC from reducing P's income for U.S. tax purposes. Therefore, DRC's net operating loss carryovers will not be available to offset P's income.

Example 2. The facts are the same as in *Example 1,* except that DRC does not sell its assets and, following the liquidation of DRC, P continues to operate DRC's business as a separate unit (*e.g.,* a branch). DRC's loss carryovers are available to offset P's income generated by the assets previously owned by DRC and now held by the separate unit.

(c) *Definitions.* The following definitions shall apply for purposes of this section.

(1) *Domestic corporation.* The term ''domestic corporation'' has the meaning assigned to it by section 7701(a) (3) and (4). The term also includes any corporation otherwise treated as a domestic corporation by the Code, including, but not limited to, sections 269B, 953(d), and 1504 (d). For purposes of this section, any separate unit of a domestic corporation, as defined in paragraph (c) (3) and (4) of this section, shall be treated as a separate domestic corporation.

(2) *Dual resident corporation.* A dual resident corporation is a domestic corporation that is subject to the income tax of a foreign country on its worldwide income or on a residence basis. A corporation is taxed on a residence basis if it is taxed as a resident under the laws of the foreign country. An S corporation, as defined in section 1361, is not a dual resident corporation. For purposes of this section, any separate unit of a domestic corporation, as defined in paragraph (c) (3) and (4) of this section, shall be treated as a dual resident corporation. Unless otherwise indicated, any reference in this section to a dual resident corporation refers also to a separate unit.

(3) *Separate unit*—(i) The term ''separate unit'' shall mean any of the following:

(A) A foreign branch, as defined in § 1.367(a)-6T(g) (or a successor regulation), that is owned either directly by a domestic corporation or indirectly by a domestic corporation through ownership of a partnership or trust interest (regardless of whether the partnership or trust is a United States person);

(B) an interest in a partnership; or

(C) an interest in a trust.

(ii) If two or more foreign branches located in the same foreign country are owned by a single domestic corporation and the losses of each branch are made available to offset the income of the other branches under the tax laws of the foreign country, within the meaning of paragraph (c)(15)(ii) of this section, then the branches shall be treated as one separate unit.

(4) *Hybrid entity separate unit.* The term ''separate unit'' includes an interest in an entity that is not taxable as an association for U.S. income tax purposes but is subject to income tax in a foreign country as a corporation (or otherwise at the entity level) either on its worldwide income or on a residence basis.

(5) *Dual consolidated loss*—(i) *In general.* The term ''dual consolidated loss'' means the net operating loss (as defined in section 172(c) and the regulations thereunder) of a domestic corporation incurred in a year in which the corporation is dual resident corporation. The dual consolidated loss shall be computed under paragraph (d)(1) of this section. The fact that a particular item taken into account in computing a dual resident corporation's net operating loss is not taken into account in computing income subject to a foreign country's income tax shall not cause such item to be excluded from the calculation of the dual consolidated loss.

(ii) *Exceptions.* A dual consolidated loss shall not include the following—

(A) A net operating loss incurred by a dual resident corporation in a foreign country whose income tax laws—

(*1*) Do not permit the dual resident corporation to use its losses, expenses or deductions to offset the income of any other person that is recognized in the same taxable year in which the losses, expenses or deductions are incurred; and

(*2*) Do not permit the losses, expenses or deductions of the dual resident corporation to be carried over or back to be used, by any means, to offset the income of any other person in other taxable years; or

(B) A net operating loss incurred during that portion of the taxable year

prior to the date on which the domestic corporation becomes a dual resident corporation or subsequent to the date on which the domestic corporation ceases to be a dual resident corporation. For purposes of determining the amount of the net operating loss incurred in that portion of the taxable year prior to the date on which the domestic corporation becomes a dual resident corporation or subsequent to the date on which the domestic corporation ceases to be a dual resident corporation, in no event shall more than the aggregate of the equal daily portion of the net operating loss commensurate with the portion of the taxable year during which the domestic corporation was not a dual resident corporation be allocated to that portion of the taxable year in which the domestic corporation was not a dual resident corporation.

(iii) *Dual consolidated losses of separate units that are partnership interests, including interests in hybrid entities.* [Reserved]

(6) *Subject to tax.* For purposes of determining whether a domestic corporation is subject to the income tax of a foreign country on its income, the fact that the corporation has no actual income tax liability to the foreign country for a particular taxable year shall not be taken into account.

(7) *Foreign country.* For purposes of this section, possessions of the United States shall be considered foreign countries.

(8) *Consolidated group.* The term ''consolidated group'' means an affiliated group, as defined in section 1504(a), with which a dual resident corporation or domestic owner files a consolidated U.S. income tax return.

(9) *Domestic owner.* The term ''domestic owner'' means a domestic corporation that owns one or more separate units.

(10) *Affiliated dual resident corporation or affiliated domestic owner.* The term ''affiliated dual resident corporation'' or ''affiliated domestic owner'' means a dual resident corporation or domestic owner that is a member of a consolidated group.

(11) *Unaffiliated dual resident corporation or unaffiliated domestic owner.* The term ''unaffiliated dual resident corporation'' or ''unaffiliated domestic owner'' means a dual resident corporation or domestic owner that is an unaffiliated domestic corporation.

(12) *Successor-in-interest.* The term ''successor-in-interest'' means an acquiring corporation that succeeds to the tax attributes of an acquired corporation by means of a transaction subject to section 381.

(13) *Domestic affiliate.* The term ''domestic affiliate'' means any member of an affiliated group, without regard to the exceptions contained in section 1504(b) (other than section 1504(b)(3)) relating to includible corporations.

(14) *Unaffiliated domestic corporation.* The term ''unaffiliated domestic corporation'' means a domestic corporation that is not a member of an affiliated group.

(15) *Use of loss to offset income of a domestic affiliate or another person*—(i) A dual consolidated loss shall be deemed to offset income of a domestic affiliate in the year it is included in the computation of the consolidated taxable income of a consolidated group. The fact that no tax benefit results from the inclusion of the dual consolidated loss in the computation of the group's consolidated taxable income in the taxable year shall not be taken into account.

(ii) Except as provided in paragraph (c)(15)(iii) of this section, a loss, expense, or deduction taken into account in computing a dual consolidated loss shall be deemed to offset income of another person under the income tax laws of a foreign country in the year it is made available for such offset. The fact that the other person does not have sufficient income in that year to benefit from such an offset shall not be taken into account. However, where the laws of a foreign country provide an election that would enable a dual resident corporation or separate unit to use its losses, expenses, or deductions to offset income of another person, the losses, expenses, or deductions shall be considered to offset such income only if the election is made.

(iii) The losses, expenses, or deductions taken into account in computing a dual resident corporation's or separate unit's dual consolidated loss shall not be deemed to offset income of another person under the income tax laws

of a foreign country for purposes of this section, if under the laws of the foreign country the losses, expenses, or deductions of the dual resident corporation or separate unit are used to offset the income of another dual resident corporation or separate unit within the same consolidated group (or income of another separate unit that is owned by the unaffiliated domestic owner of the first separate unit). If the losses, expenses, or deductions of a dual resident corporation or separate unit are made available under the laws of a foreign country to offset the income of other dual resident corporations or separate units within the same consolidated group (or other separate units owned by the unaffiliated domestic owner of the first separate unit), as well as the income of another person, and the laws of the foreign country do not provide applicable rules for determining which person's income is offset by the losses, expenses, or deductions, then for purposes of this section, the losses, expenses or deductions shall be deemed to offset the income of the other dual resident corporations or separate units, to the extent of such income, before being considered to offset the income of the other person.

(iv) Except to the extent paragraph (g)(1) of this section applies, where the income tax laws of a foreign country deny the use of losses, expenses, or deductions of a dual resident corporation to offset the income of another person because the dual resident corporation is also subject to income taxation by another country on its worldwide income or on a residence basis, the dual resident corporation shall be treated as if it actually had offset its dual consolidated loss against the income of another person in such foreign country.

(16) *Examples.* The following examples illustrate this paragraph (c).

Example 1. X, a member of a consolidated group, conducts business through a branch in Country Y. Under Country Y's income tax laws, the branch is taxed as a permanent establishment and its losses may be used under the Country Y form of consolidation to offset the income of Z, a Country Y affiliate of X. In Year 1, the branch of X incurs an overall loss that would be treated as a net operating loss if the branch were a separate domestic corporation. Under paragraph (c)(3) of this section, the branch of X is treated as a separate domestic corporation and a dual resident corporation. Thus, under paragraph (c)(5), its loss constitutes a dual consolidated loss. Unless X qualifies for an exception under paragraph (g) of this section, paragraph (b) of this section precludes the use of the branch's loss to offset any income of X not derived from the branch operations or any income of a domestic affiliate of X.

Example 2. A and B are members of a consolidated group. FC is a Country X corporation that is wholly owned by B. A and B organize a partnership, P, under the laws of Country X. P conducts business in Country X and its business activity constitutes a foreign branch within the meaning of paragraph (c)(3)(i)(A) of this section. P also earns U.S. source income that is unconnected with the branch operations and, therefore, is not subject to tax by Country X. Under the laws of Country X, the branch can consolidate with FC. The interests in P held by A and B are each treated as a dual resident corporation. The branch is also treated as a separate dual resident corporation. Unless an exception under paragraph (g) of this section applies, any dual consolidated loss incurred by P's branch cannot offset the U.S. source income earned by P or any other income of A or B.

Example 3. X is classified as a partnership for U.S. income tax purposes. A, B, and C are the sole partners of X. A and B are domestic corporations and C is a Country Y corporation. For U.S. income tax purposes, each partner has an equal interest in each item of partnership profit or loss. Under Country Y's law, X is classified as a corporation and its income and losses may be used under the Country Y form of consolidation to offset the income of companies that are affiliates of X. Under paragraph (c)(3) and (4) of this section, the partnership interests held by A and B are treated as separate domestic corporations and as dual resident corporations. Unless an exception under paragraph (g) of this section applies, losses allocated to A and B can only be used to offset profits of X allocated to A and B, respectively.

Example 4. P, a domestic corporation, files a consolidated U.S. income tax return with its two wholly-owned domestic subsidiaries, DRC1 and DRC2. Each subsidiary is also treated as a Country Y resident for Country Y tax purposes. Thus, DRC1 and DRC2 are dual resident corporations. DRC1 owns FC, a Country Y corporation. Country Y's tax laws permit affiliated resident corporations to file a form of consolidated return. In Year 1, DRC1 incurs a $200 net operating loss for both U.S. and Country Y tax purposes, while DRC2 recognizes $200 of income under the tax laws of each country. FC also earns $200 of income for Country Y tax purposes. DRC1, DRC2, and FC file a Country Y consolidated return. However, Country Y has no applicable rules for determining which income is offset by DRC1's $200 loss. Under paragraph

(c)(15)(iii) of this section, the loss shall be treated as offsetting DRC2's $200 of income. Because DRC1 and DRC2 are members of the same consolidated group, for purposes of this section, the offset of DRC1's loss against the income of DRC2 is not considered a use of the loss against the income of another person under the laws of a foreign country.

Example 5. DRC, a domestic corporation, files a consolidated U.S. income tax return with its parent, P. DRC is also subject to tax in Country Y on its worldwide income. Therefore, DRC is a dual resident corporation and any net operating loss incurred by DRC is a dual consolidated loss. Country Y's tax laws permit corporations that are subject to tax on their worldwide income to use the Country Y form of consolidation, thus enabling eligible corporations to use their losses to offset income of affiliates. However, to prevent corporations like DRC from offsetting losses against income of affiliates in Country Y and then again offsetting the losses against income of foreign affiliates under the tax laws of another country, Country Y prevents a corporation that is also subject to the income tax of another country on its worldwide income or on a residence basis from using the Country Y form of consolidation. There is no agreement, as described in paragraph (g)(1) of this section, between the United States and Country Y. Because of Country Y's statute, DRC will be treated as having actually offset its losses against the income of affiliates in Country Y under paragraph (c)(15)(iv) of this section. Therefore, DRC will not be able to file an agreement described in paragraph (g)(2) of this section and offset its losses against the income of P or any other domestic affiliate.

(d) *Special rules for accounting for dual consolidated losses*—(1) *Determination of amount of dual consolidated loss*—(i) *Dual resident corporation that is a member of a consolidated group.* For purposes of determining whether a dual resident corporation that is a member of a consolidated group has a dual consolidated loss for the taxable year, the dual resident corporation shall compute its taxable income (or loss) in accordance with the rules set forth in the regulations under section 1502 governing the computation of consolidated taxable income, taking into account only the dual resident corporation's items of income, gain, deduction, and loss for the year. However, for purposes of this computation, the following items shall not be taken into account:

(A) Any net capital loss of the dual resident corporation; and

(B) Any carryover or carryback losses.

(ii) *Dual resident corporation that is a separate unit of a domestic corporation.* For purposes of determining whether a separate unit has a dual consolidated loss for the taxable year, the separate unit shall compute its taxable income (or loss) as if it were a separate domestic corporation and a dual resident corporation in accordance with the provisions of paragraph (d)(1)(i) of this section, using only those items of income, expense, deduction, and loss that are otherwise attributable to such separate unit.

(2) *Effect of a dual consolidated loss.* For any taxable year in which a dual resident corporation or separate unit has a dual consolidated loss to which paragraph (b) of this section applies, the following rules shall apply.

(i) If the dual resident corporation is a member of a consolidated group, the group shall compute its consolidated taxable income without taking into account the items of income, loss, or deduction taken into account in computing the dual consolidated loss. The dual consolidated loss may be carried over or back for use in other taxable years as a separate net operating loss carryover or carryback of the dual resident corporation arising in the year incurred. It shall be treated as a loss incurred by the dual resident corporation in a separate return limitation year and (without regard to whether the dual resident corporation is a common parent) shall be subject to all of the limitations of §§1.1502–21A(c) or 1.1502–21(c), as appropriate (relating to limitations on net operating loss carryovers and carrybacks from separate return limitation years).

(ii) The unaffiliated domestic owner of a separate unit, or the consolidated group of an affiliated domestic owner, shall compute its taxable income without taking into account the items of income, loss or deduction taken into account in computing the separate unit's dual consolidated loss. The dual consolidated loss shall be treated as a loss incurred by a separate corporation and its use shall be subject to all of the limitations of §§1.1502–21A(c) or 1.1502–21(c), as appropriate, as if the separate unit were filing a consolidated return

with the unaffiliated domestic owner or with the consolidated group of the affiliated domestic owner.

(3) *Basis adjustments for dual consolidated losses*—(i) *Dual resident corporation that is a member of an affiliated group.* When a dual resident corporation is a member of a consolidated group, each other member owning stock in the dual resident corporation shall adjust the basis of the stock in the following manner.

(A) *Positive adjustments.* Positive adjustments shall be made in accordance with the principles of § 1.1502–32(b)(1), except that there shall be no positive adjustment under § 1.1502–32(b)(1)(ii) for any amount of the dual consolidated loss that is not absorbed as a result of the application of paragraph (b) of this section. In addition, there shall be no positive adjustment for any amount included in income pursuant to paragraph (g)(2)(vii) of this section.

(B) *Negative adjustments.* Negative adjustments shall be made in accordance with the principles of § 1.1502–32(b)(2), except that there shall be no negative adjustment under § 1.1502–32(b)(2)(ii) for the amount of the dual consolidated loss subject to paragraph (b) of this section that is absorbed in a carryover year.

(ii) *Dual resident corporation that is a separate unit arising from an interest in a partnership.* Where a separate unit is an interest in a partnership, the domestic owner shall adjust its basis in the separate unit in accordance with section 705, except that no increase in basis shall be permitted for any amount included as income pursuant to paragraph (g)(2)(vii) of this section.

(4) *Examples.* The following examples illustrate this paragraph (d).

Example 1. (i) P, S1, S2, and T are domestic corporations. P owns all of the stock of S1 and S2. S2 owns all of the stock of T. T is a resident of Country FC for Country FC income tax purposes. Therefore, T is a dual resident corporation. P, S1, S2, and T file a consolidated U.S. income tax return. X and Y are corporations that are not members of the consolidated group.

(ii) At the beginning of Year 1, P has a basis of $1000 in the stock of S2. S2 has a $500 basis in the stock of T.

(iii) In Year 1, T incurs interest expense in the amount of $100. In addition, T sells a noncapital asset, *u*, in which it has a basis of $10, to S1 for $50. T also sells a noncapital asset, *v*, in which it has a basis of $200, to S1 for $100. The sales of *u* and *v* are intercompany transactions described in § 1.1502–13. T also sells a capital asset, *z*, in which it has a basis of $180, to Y for $90. In Year 1, S1 earns $200 of separate taxable income, calculated in accordance with § 1.1502–12, as well as $90 of capital gain from a sale of an asset to X. P and S2 have no items of income, loss, or deduction for Year 1.

(iv) In Year 1, T has a dual consolidated loss of $100 (attributable to its interest expense). T's $90 capital loss is not included in the computation of the dual consolidated loss. Instead, T's capital loss is included in the computation of the consolidated group's capital gain net income under § 1.1502–22(c) and is used to offset S1's $90 capital gain.

(v) No elective agreement, as described in paragraph (g)(1) of this section, exists between the United States and Country FC. For Country FC tax purposes, T's $100 loss is offset against the income of a Country FC affiliate. Therefore, T is not eligible for the exception provided in paragraph (g)(2) of this section.

(vi) Because T has a dual consolidated loss for the year, the consolidated taxable income of the consolidated group is calculated without regard to T's items of income, loss or deduction taken into account in computing the dual consolidated loss. Therefore, the consolidated taxable income of the consolidated group is $200 (the sum of $200 of separate taxable income earned by S1 plus $90 of capital gain earned by S1 minus $90 of capital loss incurred by T). The $40 gain recognized by T upon the sale of item *u* to S1 and the $100 loss recognized by T upon the sale of item *v* to S1 are deferred pursuant to § 1.1502–13(c)(1).

(vii) S2 may not make the positive adjustment provided for in § 1.1502–32(b)(1)(ii) to its basis in the stock of T for the $100 dual consolidated loss incurred by T. In addition, no positive adjustment in the basis of the stock is required for T's $90 capital loss because the loss has been absorbed by the consolidated group. S2, however, must make the negative adjustment provided for in § 1.1502–32(b)(2)(i) for its allocable part of T's deficit in earnings and profits for the taxable year attributable to both T's $100 dual consolidated loss and T's $90 capital loss. Thus, as provided in § 1.1502–32(e)(1), S2 must make a $190 net negative adjustment to its basis in the stock of T, reducing its basis to $310. As provided in § 1.1502–33(c)(4)(ii)(a), S2's earnings and profits for Year 1 will reflect S2's decrease in its basis in T stock for the taxable year. Since S2 has no other earnings and profits for the taxable year, S2 has a $190 deficit in earnings and profits for the year. As provided in § 1.1502–32(b)(2)(i), P must make a negative adjustment to its basis in the stock of S2 for its allocable part of S2's deficit in

earnings and profits for the taxable year. Thus, P must make a $190 net negative adjustment to its basis in S2 stock, reducing its basis to $810.

Example 2. (i) The facts are the same as in *Example 1,* except that in Year 2, S1 sells items *u* and *v* to X for no gain or loss. The disposition of items *u* and *v* outside of the consolidated group restores the deferred loss and gain to T. T also incurs $100 of interest expense in Year 2. In addition, T sells a noncapital asset, *r,* in which it has a basis of $100, to Y for $300. P and S2 have no items of income, loss, or deduction for Year 2.

(ii) T has $40 of separate taxable income in Year 2, computed as follows:

($100)	interest expense
($100)	sale of item *v* to S1
$ 40	sale of item *u* to S1
$200	sale of item *r* to Y
$ 40	

Thus, T has no dual consolidated loss for the year.

(iii) Since T does not have a dual consolidated loss for the taxable year, the group's consolidated taxable income is calculated in accordance with the general rule of § 1.1502–11 and not in accordance with paragraph (d)(2) of this section. T is the only member of the consolidated group that has any income or loss for the taxable year. Thus, the consolidated taxable income of the group, computed without regard to T's dual consolidated loss carryover, is $40.

(iv) As provided by § 1.1502–21A(c), the amount of the dual consolidated loss arising in Year 1 that is included in the group's consolidated net operating loss deduction for Year 2 is $40 (that is, the consolidated taxable income computed without regard to the consolidated net operating loss deduction minus such consolidated taxable income recomputed by excluding the items of income and deduction of T). Thus, the group has no consolidated taxable income for the year.

(v) S2 must make the positive adjustment provided for in § 1.502–32(b)(1)(i) to its basis in T stock for its allocable part of T's undistributed earnings and profits for the taxable year. S2 cannot make the negative adjustment provided for in § 1.1502–32(b)(2)(ii) for the dual consolidated loss of T incurred in Year 1 and absorbed in Year 2. Thus, as provided in § 1.1502–32(e)(2), S2 must make a $40 net positive adjustment to its basis in T stock, increasing its basis to $350. As provided in § 1.1502–33(c)(4)(ii)(a), S2's earnings and profits for Year 2 will reflect S2's increase in its basis in T stock for the taxable year. Since S2 has no other earnings and profits for the taxable year, S2 has $40 of earnings and profits for the year. As provided in § 1.1502–32(b)(1)(i), P must make a positive adjustment to its basis in the stock of S2 for its allocable part of the undistributed earnings and profits of S2 for the taxable year. Thus, P must make a $40 net positive adjustment to its basis in S2 stock, increasing its basis to $850.

(e) *Special rule for use of dual consolidated loss to offset tainted income*—(1) *In general.* The dual consolidated loss of any dual resident corporation that ceases to be a dual resident corporation shall not be used to offset income of such corporation to the extent that such income is tainted income, as defined in paragraph (e)(2) of this section.

(2) *Tainted income defined.* Tainted income is any income derived from tainted assets, as defined in paragraph (e)(3) of this section, beginning on the date such assets are acquired by the dual resident corporation. In the absence of evidence establishing the actual amount of income that is attributable to the tainted assets, the portion of a corporation's income in a particular taxable year that is treated as tainted income shall be an amount equal to the corporation's taxable income for the year multiplied by a fraction, the numerator of which is the fair market value of the tainted asset at the end of the taxable year and the denominator of which is the fair market value of the total assets owned by the corporation at the end of the taxable year. Documentation submitted to establish the actual amount of income that is attributable to the tainted assets must be attached to the consolidated group's or unaffiliated dual resident corporation's timely filed tax return for the taxable year in which the income is recognized.

(3) *Tainted assets defined.* Tainted assets are any asset acquired by a dual resident corporation in a non-recognition transaction, as defined in section 7701(a)(45), or any assets otherwise transferred to the corporation as a contribution to capital, at any time during the three taxable years immediately preceding the taxable year in which the corporation ceases to be a dual resident corporation or at any time thereafter. Tainted assets shall not include assets that were acquired by such dual resident corporation on or before December 31, 1986.

(4) *Exceptions.* Income derived from assets acquired by a dual resident corporation shall not be subject to the limitation described in paragraph (e)(1) of this section, if—

(i) For the taxable year in which the assets were acquired, the corporation did not have a dual consolidated loss (or a carry forward of a dual consolidated loss to such year); or

(ii) The assets were acquired as replacement property in the ordinary course of business.

(f) *Computation of foreign tax credit limitations.* If a dual resident corporation or separate unit is subject to paragraph (d)(2) of this section, the consolidated group or unaffiliated domestic owner shall compute its foreign tax credit limitation by applying the limitations of paragraph (d)(2). Thus, the dual consolidated loss is not taken into account until the year in which it is absorbed.

(g) *Exception*—(1) *Elective agreement in place between the United States and a foreign country.* Paragraph (b) of this section shall not apply to a dual consolidated loss to the extent the dual resident corporation, or domestic owner of a separate unit, elects to deduct the loss in the United States pursuant to an agreement entered into between the United States and a foreign country that puts into place an elective procedure through which losses offset income in only one country.

(2) *Elective relief provision*—(i) [Reserved]. For further guidance, *see* § 1.1503–2T(g)(2)(i).

(ii) *Consistency rule*—(A) If any loss, expense, or deduction taken into account in computing the dual consolidated loss of a dual resident corporation or separate unit is used under the laws of a foreign country to offset the income of another person, then the following other dual consolidated losses (if any) shall be treated as also having been used to offset income of another person under the laws of such foreign country, but only if the income tax laws of the foreign country permit any loss, expense, or deduction taken into account in computing the other dual consolidated loss to be used to offset the income of another person in the same taxable year;

(*1*) Any dual consolidated loss of a dual resident corporation that is a member of the same consolidated group of which the first dual resident corporation or domestic owner is a member, if any loss, expense, or deduction taken into account in computing such dual consolidated loss is recognized under the income tax laws of such country in the same taxable year; and

(*2*) Any dual consolidated loss of a separate unit that is owned by the same domestic owner that owns the first separate unit, or that is owned by any member of the same consolidated group of which the first dual resident corporation or domestic owner is a member, if any loss, expense, or deduction taken into account in computing such dual consolidated loss is recognized under the income tax laws of such country in the same taxable year.

(B) The following examples illustrate the application of this paragraph (g)(2)(ii).

Example 1. P, a domestic corporation, owns A and B, which are domestic corporations, and C, a Country X corporation. A is subject to the income tax laws of Country X on a residence basis and, thus, is a dual resident corporation. B conducts business in Country X through a branch, which is a separate unit under paragraph (c)(3) of this section. The income tax laws of Country X permit branches of foreign corporations to elect to file consolidated returns with Country X affiliates. In Year 1, A incurs a dual consolidated loss, which is used to offset the income of C under the Country X form of consolidation. The branch of B also incurs a net operating loss. However, B elects not to use the loss on a Country X consolidated return to offset the income of foreign affiliates. The use of A's loss to offset the income of C in Country X will cause the separate unit of B to be treated as if it too had used its dual consolidated loss to offset the income of an affiliate in Country X. Therefore, an election and agreement under this paragraph (g)(2) cannot be made with respect to the separate unit's dual consolidated loss.

Example 2. The facts are the same as in *Example 1,* except that the income tax laws of Country X do not permit branches of foreign corporations to file consolidated income tax returns with Country X affiliates. Therefore, an election and agreement described in this paragraph (g)(2) may be made for the dual consolidated loss incurred by the separate unit of B.

(iii) *Triggering events requiring the recapture of dual consolidated losses*—(A) The consolidated group, unaffiliated dual resident corporation, or unaffiliated domestic owner must agree that, if there is a triggering event described

in this paragraph (g)(2)(iii), and no exception applies under paragraph (g)(2)(iv) of this section, the consolidated group, unaffiliated dual resident corporation, or unaffiliated domestic owner will recapture and report as income the amount of the dual consolidated loss provided in paragraph (g)(2)(vii) of this section on its tax return for the taxable year in which the triggering event occurs (or, when the triggering event is a use of the loss for foreign purposes, the taxable year that includes the last day of the foreign tax year during which such use occurs). In addition, the consolidated group, unaffiliated dual resident corporation, or unaffiliated domestic owner must pay any applicable interest charge required by paragraph (g)(2)(vii) of this section. For purposes of this section, any of the following events shall constitute a triggering event:

(*1*) In any taxable year up to and including the 15th taxable year following the year in which the dual consolidated loss that is the subject of the agreement filed under this paragraph (g)(2) was incurred, any portion of the losses, expenses, or deductions taken into account in computing the dual consolidated loss is used by any means to offset the income of any other person under the income tax laws of a foreign country;

(*2*) An affiliated dual resident corporation or affiliated domestic owner ceases to be a member of the consolidated group that filed the election. For purposes of this paragraph (g)(2)(iii)(A)(*2*), a dual resident corporation or domestic owner shall be considered to cease to be a member of the consolidated group if it is no longer a member of the group within the meaning of §1.1502–1(b), or if the group ceases to exist because the common parent is no longer in existence or is no longer a common parent or the group no longer files on the basis of a consolidated return. Such disaffiliation, however, shall not constitute a triggering event if the taxpayer demonstrates, to the satisfaction of the Commissioner, that the dual resident corporation's or separate unit's losses, expenses, or deductions cannot be used to offset income of another person under the laws of a foreign country at any time after the affiliated dual resident corporation or affiliated domestic owner ceases to be a member of the consolidated group;

(*3*) An unaffiliated dual resident corporation or unaffiliated domestic owner becomes a member of a consolidated group. Such affiliation of the dual resident corporation or domestic owner, however, shall not constitute a triggering event if the taxpayer demonstrates, to the satisfaction of the Commissioner, that the losses, expenses, or deductions of the dual resident corporation or separate unit cannot be used to offset the income of another person under the laws of a foreign country at any time after the dual resident corporation or domestic owner becomes a member of the consolidated group.

(*4*) A dual resident corporation transfers assets in a transaction that results, under the laws of a foreign country, in a carryover of its losses, expenses, or deductions. For purposes of this paragraph (g)(2)(iii)(A)(*4*), a transfer, either in a single transaction or a series of transactions within a twelve-month period, of 50% or more of the dual resident corporation's assets (measured by the fair market value of the assets at the time of such transfer (or for multiple transactions, at the time of the first transfer)) shall be deemed a triggering event, unless the taxpayer demonstrates, to the satisfaction of the Commissioner, that the transfer of assets did not result in a carryover under foreign law of the dual resident corporation's losses, expenses, or deductions to the transferee of the assets;

(*5*) A domestic owner of a separate unit transfers assets of the separate unit in a transaction that results, under the laws of a foreign country, in a carryover of the separate unit's losses, expenses, or deductions. For purposes of this paragraph (g)(2)(iii)(A)(*5*), a transfer, either in a single transaction or a series of transactions over a twelve-month period, of 50% or more of the separate unit's assets (measured by the fair market value of the assets at the time of the transfer (or for multiple transfers, at the time of the first transfer)), shall be deemed a triggering event, unless the

taxpayer demonstrates, to the satisfaction of the Commissioner, that the transfer of assets did not result in a carryover under foreign law of the separate unit's losses, expenses, or deductions to the transferee of the assets;

(*6*) An unaffiliated dual resident corporation or unaffiliated domestic owner becomes a foreign corporation by means of a transaction (*e.g.*, a reorganization) that, for foreign tax purposes, is not treated as involving a transfer of assets (and carryover of losses) to a new entity. Such a transaction, however, shall not constitute a triggering event if the taxpayer demonstrates, to the satisfaction of the Commissioner, that the dual resident corporation's or separate unit's losses, expenses, or deductions cannot be used to offset income of another person under the laws of the foreign country at any time after the unaffiliated dual resident corporation or unaffiliated domestic owner becomes a foreign corporation.

(*7*) A domestic owner of a separate unit, either in a single transaction or a series of transactions within a twelve-month period, sells, or otherwise disposes of, 50% or more of the interest in the separate unit (measured by voting power or value) owned by the domestic owner on the last day of the taxable year in which the dual consolidated loss was incurred. For purposes of this paragraph (g)(2)(iii)(A)(*7*), the domestic owner shall be deemed to have disposed of its entire interest in a hybrid entity separate unit if such hybrid entity becomes classified as a foreign corporation for U.S. tax purposes. The disposition of 50% or more of the interest in a separate unit, however, shall not constitute a triggering event if the taxpayer demonstrates, to the satisfaction of the Commissioner, that the losses, expenses, or deductions of the separate unit cannot be used to offset income of another person under the laws of the foreign country at any time after the disposition of the interest in the separate unit; or

(*8*) The consolidated group, unaffiliated dual resident corporation, or unaffiliated domestic owner fails to file a certification required under paragraph (g)(2)(vi)(B) of this section.

(B) A taxpayer wishing to rebut the presumption of a triggering event described in paragraphs (g)(2)(iii)(A)(*2*) through (*7*) of this section, by demonstrating that the losses, expenses, or deductions of the dual resident corporation or separate unit cannot be carried over or otherwise used under the laws of the foreign country, must attach documents demonstrating such facts to its timely filed U.S. income tax return for the year in which the presumed triggering event occurs.

(C) The following example illustrates this paragraph (g)(2)(iii).

Example. DRC, a domestic corporation, is a member of CG, a consolidated group. DRC is a resident Country Y for Country Y income tax purposes. Therefore, DRC is a dual resident corporation. In Year 1, DRC incurs a dual consolidated loss of $100. CG files an agreement described in paragraph (g)(2) of this section and, thus, the $100 dual consolidated loss is included in the computation of CG's consolidated taxable income. In Year 6, all of the stock of DRC is sold to P, a domestic corporation that is a member of NG, another consolidated group. The sale of DRC to P is a triggering event under paragraph (g)(2)(iii)(A) of this section, requiring the recapture of the dual consolidated loss. However, the laws of Country Y provide for a five-year carryover period for losses. At the time of DRC's disaffiliation from CG, the losses, expenses and deductions that were included in the computation of the dual consolidated loss had expired for Country Y purposes. Therefore, upon adequate documentation that the losses, expenses, or deductions have expired for Country Y purposes, CG can rebut the presumption that a triggering event has occurred.

(iv) *Exceptions*—(A) *Acquisition by a member of the consolidated group.* The following events shall not constitute triggering events, requiring the recapture of the dual consolidated loss under paragraph (g)(2)(vii) of this section:

(*1*) An affiliated dual resident corporation or affiliated domestic owner ceases to be a member of a consolidated group solely by reason of a transaction in which a member of the same consolidated group succeeds to the tax attributes of the dual resident corporation or domestic owner under the provisions of section 381;

(*2*) Assets of an affiliated dual resident corporation or assets of a separate unit of an affiliated domestic owner

are acquired by a member of its consolidated group in any other transaction; or

(*3*) An affiliated domestic owner of a separate unit transfers its interest in the separate unit to another member of its consolidated group.

(B) *Acquisition by an unaffiliated domestic corporation or a new consolidated group*—(*1*) If all the requirements of paragraph (g)(2)(iv)(B)(*3*) of this section are met, the following events shall not constitute triggering events requiring the recapture of the dual consolidated loss under paragraph (g)(2)(vii) of this section:

(*i*) An affiliated dual resident corporation or affiliated domestic owner becomes an unaffiliated domestic corporation or a member of a new consolidated group (other than in a transaction described in paragraph (g)(2)(iv)(B)(*2*)(*ii*) of this section);

(*ii*) Assets of a dual resident corporation or a separate unit are acquired by an unaffiliated domestic corporation or a member of a new consolidated group; or

(*iii*) A domestic owner of a separate unit transfers its interest in the separate unit to an unaffiliated domestic corporation or to a member of a new consolidated group.

(*2*) If the requirements of paragraph (g)(2)(iv)(B)(*3*)(*iii*) of this section are met, the following events shall not constitute triggering events requiring the recapture of the dual consolidated loss under paragraph (g)(2)(vii) of this section—

(*i*) An unaffiliated dual resident corporation or unaffiliated domestic owner becomes a member of a consolidated group;

(*ii*) A consolidated group that filed an agreement under this paragraph (g)(2) ceases to exist as a result of a transaction described in § 1.1502–13(j)(5)(i) (other than a transaction in which any member of the terminating group, or the successor-in-interest of such member, is not a member of the surviving group immediately after the terminating group ceases to exist).

(*3*) If the following requirements (as applicable) are satisfied, the events listed in paragraphs (g)(2)(iv)(B)(*1*) and (*2*) of this section shall not constitute triggering events requiring recapture under paragraph (g)(2)(vii) of this section.

(*i*) The consolidated group, unaffiliated dual resident corporation, or unaffiliated domestic owner that filed the agreement under this paragraph (g)(2) and the unaffiliated domestic corporation or new consolidated group must enter into a closing agreement with the Internal Revenue Service providing that the consolidated group, unaffiliated dual resident corporation, or unaffiliated domestic owner and the unaffiliated domestic corporation or new consolidated group will be jointly and severally liable for the total amount of the recapture of dual consolidated loss and interest charge required in paragraph (g)(2)(vii) of this section, if there is a triggering event described in paragraph (g)(2)(iii) of this section;

(*ii*) The unaffiliated domestic corporation or new consolidated group must agree to treat any potential recapture amount under paragraph (g)(2)(vii) of this section as unrealized built-in gain for purposes of section 384(a), subject to any applicable exceptions thereunder;

(*iii*) [Reserved]. For further guidance, *see* § 1.1503–2T(g)(2)(iv)(B)(*3*)(*iii*).

(C) *Subsequent triggering events.* Any triggering event described in paragraph (g)(2)(iii) of this section that occurs subsequent to one of the transactions described in paragraph (g)(2)(iv) (A) or (B) of this section and does not fall within the exceptions provided in paragraph (g)(2)(iv) (A) or (B) of this section shall require recapture under paragraph (g)(2)(vii) of this section.

(D) *Example.* The following example illustrates the application of paragraph (g)(2)(iv)(B)(*2*)(*ii*) of this section:

Example. (i) Facts. C is the common parent of a consolidated group (the C Group) that includes DRC, a domestic corporation. DRC is a dual resident corporation and incurs a dual consolidated loss in its taxable year ending December 31, Year 1. The C Group elects to be bound by the provisions of this paragraph (g)(2) with respect to the Year 1 dual consolidated loss. No member of the C Group incurs a dual consolidated loss in Year 2. On December 31, Year 2, stock of C is acquired by D in a transaction described in § 1.1502–13(j)(5)(i). As a result of the acquisition, all the C Group members, including DRC, become members of a consolidated group of which D is the common parent (the D Group).

(ii) Acquisition not a triggering event. Under paragraph (g)(2)(iv)(B)(*2*)(*ii*) of this section, the acquisition by D of the C Group is not an event requiring the recapture of the Year 1 dual consolidated loss of DRC, or the payment of an interest charge, as described in paragraph (g)(2)(vii) of this section, provided that the D Group files the new (g)(2)(i) agreement described in paragraph (g)(2)(iv)(B)(*3*)(*iii*) of this section.

(iii) Subsequent event. A triggering event occurs on December 31, Year 3, that requires recapture by the D Group of the dual consolidated loss that DRC incurred in Year 1, as well as the payment of an interest charge, as provided in paragraph (g)(2)(vii) of this section. Each member of the D Group, including DRC and the other former members of the C Group, is severally liable for the additional tax (and the interest charge) due upon the recapture of the dual consolidated loss of DRC.

(v) *Ordering rules for determining the foreign use of losses.* If the laws of a foreign country provide for the use of losses of a dual resident corporation to offset the income of another person but do not provide applicable rules for determining the order in which such losses are used to offset the income of another person in a taxable year, then for purposes of this section, the following rules shall govern:

(A) If under the laws of the foreign country the dual resident corporation has losses from different taxable years, the dual resident corporation shall be deemed to use first the losses from the earliest taxable year from which a loss may be carried forward or back for foreign law purposes.

(B) Any net loss, or income, that the dual resident corporation has in a taxable year shall first be used to offset net income, or loss, recognized by affiliates of the dual resident corporation in the same taxable year before any carryover of the dual resident corporation's losses is considered to be used to offset any income from the taxable year.

(C) Where different losses, expenses, or deductions (*e.g.*, capital losses and ordinary losses) of a dual resident corporation incurred in the same taxable year are available to offset the income of another person, the different losses shall be deemed to offset such income on a pro rata basis.

Example. DRC, a domestic corporation, is taxed as a resident under the tax laws of Country Y. Therefore, DRC is a dual resident corporation. FA is a Country Y affiliate of DRC. Country Y's tax laws permit affiliated corporations to file a form of consolidated return. In Year 1, DRC incurs a capital loss of $80 which, for Country Y purposes, offsets completely $30 of capital gain recognized by FA. Neither corporation has any other taxable income or loss for the year. In Year 1 (and in other years), DRC recognizes the same amount of income for U.S. purposes as it does for Country Y purposes. Under paragraph (d)(1)(i) of this section, however, DRC's $80 capital loss is not a dual consolidated loss. In Year 2, DRC incurs a net operating loss of $100, while FA incurs a net operating loss of $50. DRC's $100 loss is a dual consolidated loss. Since the dual consolidated loss is not used to offset the income of another person under Country Y law, DRC is permitted to file an agreement described in this paragraph (g)(2). In Year 3, DRC has a net operating loss of $10 and FA has capital gains of $60. For Country Y purposes, DRC's $10 net operating loss is used to offset $10 of FA's $60 capital gain. DRC's $10 loss is a dual consolidated loss. Because the loss is used to offset FA's income, DRC will not be able to file an agreement under this paragraph (g)(2) with respect to the loss. Country Y permits FA's remaining $50 of Year 3 income to be offset by carryover losses. However, Country Y has no applicable rules for determining which carryover losses from Years 1 and 2 are used to offset such income. Under the ordering rules of paragraph (g)(2)(v)(A) of this section, none of DRC's $100 Year 2 loss will be deemed to offset FA's remaining $50 of Year 3 income. Instead, the $50 of capital loss carryover from Year 1 will be considered to offset the income.

(vi) *Reporting requirements*—(A) *In general.* The consolidated group, unaffiliated dual resident corporation, or unaffiliated domestic owner must answer the applicable questions regarding dual consolidated losses on its U.S. income tax return filed for the year in which the dual consolidated loss is incurred and for each of the following fifteen taxable years.

(B) [Reserved]. For further guidance, *see* § 1.1503–2T(g)(2)(vi)(B).

(C) *Exception.* A consolidated group or unaffiliated domestic owner is not required to file annual certifications under paragraph (g)(2)(vi)(B) of this section with respect to a dual consolidated loss of any separate unit other than a hybrid entity separate unit.

(vii) *Recapture of loss and interest charge*—(A) *Presumptive rule—(1)*

Amount of recapture. Except as otherwise provided in this paragraph (g)(2)(vii), upon the occurrence of a triggering event described in paragraph (g)(2)(iii) of this section, the taxpayer shall recapture and report as gross income the total amount of the dual consolidated loss to which the triggering event applies on its income tax return for the taxable year in which the triggering event occurs (or, when the triggering event is a use of the loss for foreign tax purposes, the taxable year that includes the last day of the foreign tax year during which such use occurs).

(*2*) *Interest charge.* In connection with the recapture, the taxpayer shall pay an interest charge. Except as otherwise provided in this paragraph (g)(2)(vii), such interest shall be determined under the rules of section 6601(a) as if the additional tax owed as a result of the recapture had accrued and been due and owing for the taxable year in which the losses, expenses, or deductions taken into account in computing the dual consolidated loss gave rise to a tax benefit for U.S. income tax purposes. For purposes of this paragraph (g)(2)(vii)(A)(*2*), a tax benefit shall be considered to have arisen in a taxable year in which such losses, expenses or deductions reduced U.S. taxable income.

(B) *Rebuttal of presumptive rule—*(*1*) *Amount of recapture.* The amount of dual consolidated loss that must be recaptured under this paragraph (g)(2)(vii) may be reduced if the taxpayer demonstrates, to the satisfaction of the Commissioner, the offset permitted by this paragraph (g)(2)(vii)(B). The reduction in the amount of recapture is the amount by which the dual consolidated loss would have offset other taxable income reported on a timely filed U.S. income tax return for any taxable year up to and including the year of the triggering event if such loss had been subject to the restrictions of paragraph (b) of this section (and therefore had been subject to the separate return limitation year restrictions of §§1.1502–21A(c) or 1.1502–21(c) (as appropriate) commencing in the taxable year in which the loss was incurred. A taxpayer utilizing this rebuttal rule must attach to its timely filed U.S. income tax return a separate accounting showing that the income for each year that offsets the dual resident corporation's or separate unit's recapture amount is attributable only to the dual resident corporation or separate unit.

(*2*) *Interest charge.* The interest charge imposed under this paragraph (g)(2)(vii) may be appropriately reduced if the taxpayer demonstrates, to the satisfaction of the Commissioner, that the net interest owed would have been less than that provided in paragraph (g)(2)(vii)(A)(*2*) of this section if the taxpayer had filed an amended return for the year in which the loss was incurred, and for any other affected years up to and including the year of recapture, treating the dual consolidated loss as a loss subject to the restrictions of paragraph (b) of this section (and therefore subject to the separate return limitation year restrictions of §§1.1502–21A(c) or 1.1502–21(c) (as appropriate). A taxpayer utilizing this rebuttal rule must attach to its timely filed U.S. income tax return a computation demonstrating the reduction in the net interest owed as a result of treating the dual consolidated loss as a loss subject to the restrictions of paragraph (b) of this section.

(C) *Computation of taxable income in year of recapture—(1) Presumptive rule.* Except as otherwise provided in paragraph (g)(2)(vii)(C)(*2*) of this section, for purposes of computing the taxable income for the year of recapture, no current, carryover or carryback losses of the dual resident corporation or separate unit, of other members of the consolidated group, or of the domestic owner that are not attributable to the separate unit, may offset and absorb the recapture amount.

(*2*) *Rebuttal of presumptive rule.* The recapture amount included in gross income may be offset and absorbed by that portion of the taxpayer's (consolidated or separate) net operating loss carryover that is attributable to the dual consolidated loss being recaptured, if the taxpayer demonstrates, to the satisfaction of the Commissioner, the amount of such portion of the carryover. A taxpayer utilizing this rebuttal rule must attach to its timely filed U.S. income tax return a computation

demonstrating the amount of net operating loss carryover that, under this paragraph (g)(2)(vii)(C)(*2*), may absorb the recapture amount included in gross income.

(D) *Character and source of recapture income.* The amount recaptured under this paragraph (g)(2)(vii) shall be treated as ordinary income in the year of recapture. The amount recaptured shall be treated as income having the same source and falling within the same separate category for purposes of section 904 as the dual consolidated loss being recaptured.

(E) *Reconstituted net operating loss.* Commencing in the taxable year immediately following the year in which the dual consolidated loss is recaptured, the dual resident corporation or separate unit shall be treated as having a net operating loss in an amount equal to the amount actually recaptured under paragraph (g)(2)(vii) (A) or (B) of this section. This reconstituted net operating loss shall be subject to the restrictions of paragraph (b) of this section (and therefore, the separate return limitation year restrictions of §§1.1502–21A(c) or 1.1502–21T(c) (as appropriate). The net operating loss shall be available only for carryover, under section 172(b), to taxable years following the taxable year of recapture. For purposes of determining the remaining carryover period, the loss shall be treated as if it had been recognized in the taxable year in which the dual consolidated loss that is the basis of the recapture amount was incurred.

(F) *Consequences of failing to comply with recapture provisions*—(*1*) *In general.* If the taxpayer fails to comply with the recapture provisions of this paragraph (g)(2)(vii) upon the occurrence of a triggering event, then the dual resident corporation or separate unit that incurred the dual consolidated loss (or a successor-in-interest) shall not be eligible for the relief provided in paragraph (g)(2) of this section with respect to any dual consolidated losses incurred in the five taxable years beginning with the taxable year in which recapture is required.

(*2*) *Exceptions.* In the case of a triggering event other than a use of the losses, expenses, or deductions taken into account in computing the dual consolidated loss to offset income of another person under the income tax laws of a foreign country, this rule shall not apply in the following circumstances:

(*i*) The failure to recapture is due to reasonable cause; or

(*ii*) A taxpayer seeking to rebut the presumption of a triggering event satisfies the filing requirements of paragraph (g)(2)(iii)(B) of this section.

(G) *Examples.* The following examples illustrate this paragraph (g)(2)(vii).

Example 1. P, a domestic corporation, files a consolidated return with DRC, a dual resident corporation. In Year 1, DRC incurs a dual consolidated loss of $100 and P earns $100. P files an agreement under this paragraph (g)(2). Therefore, the consolidated group is permitted to offset P's $100 of income with DRC's $100 loss. In Year 2, DRC earns $30, which is completely offset by a $30 net operating loss incurred by P. In Year 3, DRC earns income of $25 while P recognizes no income or loss. In addition, there is a triggering event in Year 3. Therefore, under the presumptive rule of paragraph (g)(2)(vii)(A) of this section, DRC must recapture $100. However, the $100 recapture amount may be reduced by $25 (the amount by which the dual consolidated loss would have offset other taxable income if it had been subject to the separate return limitation year restrictions from Year 1) upon adequate documentation of such offset under paragraph (g)(2)(vii)(B)(*1*) of this section. Commencing in Year 4, the $100 (or $75) recapture amount is treated as a loss incurred by DRC in a separate return limitation year, subject to the restrictions of §§1.1502–21A(c) or 1.1502–21(c), as appropriate. The carryover period of the loss, for purposes of section 172(b), will start from Year 1, when the dual consolidated loss was incurred.

Example 2. The facts are the same as in EXAMPLE 1, except that in Year 2, DRC earns $75 and P earns $50. In Year 3, DRC earns $25 while P earns $30. A triggering event occurs in Year 3. The $100 presumptive amount of recapture can be reduced to zero by the $75 and $25 earned by DRC in Years 2 and 3, respectively, upon adequate documentation of such offset under paragraph (g)(2)(vii)(B)(*1*) of this section. Nevertheless, an interest charge will be owed. Under the presumptive rule of paragraph (g)(2)(vii)(A)(*2*) of this section, interest will be charged on the additional tax owed on the $100 of recapture income as if the tax had accrued in Year 1 (the year in which the dual consolidated loss reduced the income of P). However, the net interest will be reduced to the amount that would have been owed if the consolidated group had filed amended returns, treating

the dual consolidated loss as a loss subject to the separate return limitation year restrictions of §1.1502–21A(c) or 1.1502–21(c), as appropriate, upon adequate documentation of such reduction of interest under paragraph (g)(2)(vii)(B)(*2*) of this section.

Example 3. P, a domestic corporation, owns DRC, a domestic corporation that is subject to the income tax laws of Country Z on a residence basis. DRC owns FE, a Country Z corporation. In Year 1, DRC incurs a net operating loss for U.S. tax purposes. Under the tax laws of Country Z, the loss is not recognized until Year 3. The Year 1 net operating loss is a dual consolidated loss under paragraph (c)(5) of this section. The consolidated group elects relief under paragraph (g)(2) of this section by filing the appropriate agreement and uses the dual consolidated loss on its U.S. income tax return. In Year 3, the dual consolidated loss is used under the laws of Country Z to offset the income of FE, which is a triggering event under paragraph (g)(2)(iii) of this section. However, the consolidated group does not recapture the dual consolidated loss. The consolidated group's failure to comply with the recapture provisions of this paragraph (g)(2)(vii) prevents DRC from being eligible for the relief provided under paragraph (g)(2) of this section for any dual consolidated losses incurred in Years 3 through 7, inclusive.

(h) *Effective date*—(1) *In general.* These regulations are effective for taxable years beginning on or after October 1, 1992. Section 1.1503–2A is effective for taxable years beginning after December 31, 1986, and before October 1, 1992. Paragraph (g)(2)(iv)(B)(*2*) of this section shall apply with respect to transactions otherwise constituting triggering events occurring on or after January 1, 2002.

(2) *Taxpayers that have filed for relief under §1.1503–2A*—(i) *In general.* Except as provided in paragraph (h)(ii)(b) of this section, taxpayers that have filed agreements described in §1.1503–2A(c)(3) or certifications described in §1.1503–2A(d)(3) shall continue to be subject to the provisions of such agreements or certifications, including the amended return or recapture requirements applicable in the event of a triggering event, for the remaining term of such agreements or certifications.

(ii) *Special transition rule.* A taxpayer that has filed an agreement described in §1.1503–2A(c)(3) or a certification described in §1.1503–2A(d)(3) and that is in compliance with the provisions of §1.1503–2A may elect to replace such agreement or certification with an agreement described in paragraph (g)(2)(i) of this section. However, a taxpayer making this election must replace all agreements and certifications filed under §1.1503–2A. If the taxpayer is a consolidated group, the election must be made with respect to all dual resident corporations or separate units within the group. Likewise, if the taxpayer is an unaffiliated domestic owner, the election must be made with respect to all separate units of the domestic owner. The taxpayer must file the replacement agreement with its timely filed income tax return for its first taxable year commencing on or after October 1, 1992, stating that such agreement is a replacement for the agreement filed under §1.1503–2A(c)(3) or the certification filed under §1.1503–2A(d)(3) and identifying the taxable year for which the original agreement or certification was filed. A single agreement described in paragraph (g)(2)(i) of this section may be filed to replace more than one agreement or certification filed under §1.1503–2A; however, each dual consolidated loss must be separately identified. A taxpayer may also elect to apply §1.1503–2 for all open years, with respect to agreements filed under §1.1503–2A(c)(3) or certifications filed under §1.1503–2A(d)(3), in cases where the agreement or certification is no longer in effect and the taxpayer has complied with the provisions of §1.1503–2A. For example, a taxpayer may have had a triggering event under §1.1503–2A that is not a triggering event under §1.1503–2. If the taxpayer fully complied with the requirements of the agreement entered into under §1.1503–2A(c)(3) and filed amended U.S. income tax returns within the time required under §1.1503–2A(c)(3), the taxpayer may file amended U.S. income tax returns consistent with the position that the earlier triggering event is no longer a triggering event.

(3) *Taxpayers that are in compliance with §1.1503–2A but have not filed for relief thereunder.* A taxpayer that is in compliance with the provisions of §1.1503–2A but has not filed an agreement described in §1.1503–2A(c)(3) or a certification described in §1.1503–

2A(d)(3) may elect to have the provisions of § 1.1503–2 apply for any open year. In particular, a taxpayer may elect to apply the provisions of § 1.1503–2 in a case where the dual consolidated loss has been subjected to the separate return limitation year restrictions of § 1.1502–21A(c) or 1.1502–21(c) (as appropriate) but the losses, expenses, or deductions taken into account in computing the dual consolidated loss have not been used to offset the income of another person for foreign tax purposes. However, if a taxpayer is a consolidated group, the election must be made with respect to all dual resident corporations or separate units within the group. Likewise, if the taxpayer is an unaffiliated domestic owner, the election must be made with respect to all separate units of the domestic owner.

[T.D. 8434, 57 FR 41084, Sept. 9, 1992; 57 FR 48722, Oct. 28, 1992; 57 FR 57280, Dec. 3, 1992; 58 FR 13413, Mar. 11, 1993, as amended by T.D. 8597, 60 FR 36680, July 18, 1995; T.D. 8677, 61 FR 33325, June 27, 1996; T.D. 8823, 64 FR 36101, July 2, 1999; T.D. 9084, 68 FR 44617, July 30, 2003; T.D. 9100, 68 FR 70707, Dec. 19, 2003]

§ 1.1503–2T Dual consolidated loss (temporary).

(a) through (g)(1) [Reserved]. For further guidance, *see* § 1.1503–2(a) through (g)(1).

(2) *Elective relief provision*—(i) *In general.* Paragraph (b) of this section shall not apply to a dual consolidated loss if the consolidated group, unaffiliated dual resident corporation, or unaffiliated domestic owner elects to be bound by the provisions of § 1.1503–2(g)(2) and this paragraph (g)(2). In order to elect relief under § 1.1503–2(g)(2) and this paragraph (g)(2), the consolidated group, unaffiliated dual resident corporation, or unaffiliated domestic owner must attach to its timely filed U.S. income tax return for the taxable year in which the dual consolidated loss is incurred an agreement described in paragraph (g)(2)(i)(A) of this section. The agreement must be signed under penalties of perjury by the person who signs the return. For taxable years beginning after December 31, 2002, the agreement attached to the income tax return of the consolidated group, unaffiliated dual resident corporation or unaffiliated domestic owner pursuant to the preceding sentence may be an unsigned copy. If an unsigned copy is attached to the return, the consolidated group, unaffiliated dual resident corporation, or unaffiliated domestic owner must retain the original in its records in the manner specified by § 1.6001–1(e). The agreement must include the following items, in paragraphs labeled to correspond with the items set forth in paragraphs (g)(2)(i)(A) through (F) of this section:

(A) A statement that the document submitted is an election and an agreement under the provisions of § 1.1503–2(g)(2) of the Income Tax Regulations.

(B) The name, address, identifying number, and place and date of incorporation of the dual resident corporation, and the country or countries that tax the dual resident corporation on its worldwide income or on a residence basis, or, in the case of a separate unit, identification of the separate unit, including the name under which it conducts business, its principal activity, and the country in which its principal place of business is located.

(C) An agreement by the consolidated group, unaffiliated dual resident corporation, or unaffiliated domestic owner to comply with all of the provisions of paragraphs (g)(2)(iii) through (vii) of § 1.1503–2 and this section.

(D) A statement of the amount of the dual consolidated loss covered by the agreement.

(E) A certification that no portion of the dual resident corporation's or separate unit's losses, expenses, or deductions taken into account in computing the dual consolidated loss has been, or will be, used to offset the income of any other person under the income tax laws of a foreign country.

(F) A certification that arrangements have been made to ensure that no portion of the dual consolidated loss will be used to offset the income of another person under the laws of a foreign country and that the consolidated group, unaffiliated dual resident corporation, or unaffiliated domestic owner will be informed of any such foreign use of any portion of the dual consolidated loss.

(g)(2)(ii) through (iv)(B)(*3*)(*ii*) [Reserved] For further guidance, *see* § 1.1503–2(g)(2)(ii) through (iv)(B)(3)(ii).

(g)(2)(iv)(B)(*3*)(*iii*) The unaffiliated domestic corporation or new consolidated group must file, with its timely filed income tax return for the taxable year in which the event described in § 1.1503–2(g)(2)(iv)(B)(*1*) or (*2*) occurs, an agreement described in paragraph (g)(2)(i) of this section (new (g)(2)(i) agreement), whereby it assumes the same obligations with respect to the dual consolidated loss as the corporation or consolidated group that filed the original (g)(2)(i) agreement with respect to that loss. The new (g)(2)(i) agreement must be signed under penalties of perjury by the person who signs the return and must include a reference to § 1.1503–2(g)(2)(iv)(B)(*3*)(*iii*) or this paragraph (g)(2)(iv)(B)(*3*)(*iii*). For taxable years beginning after December 31, 2002, the agreement attached to the return pursuant to the preceding sentence may be an unsigned copy. If an unsigned copy is attached to the return, the corporation or consolidated group must retain the original in its records in the manner specified by § 1.6001–1(e).

(g)(2)(iv)(C) through (vi)(A) [Reserved]. For further guidance, *see* § 1.1503–2(g)(2)(iv)(C) through (vi)(A).

(B) *Annual certification*. Except as provided in § 1.1503–2(g)(2)(vi)(C), until and unless Form 1120 or the Schedules thereto contain questions pertaining to dual consolidated losses, the consolidated group, unaffiliated dual resident corporation, or unaffiliated domestic owner must file with its income tax return for each of the 15 taxable years following the taxable year in which the dual consolidated loss is incurred a certification that the losses, expenses, or deductions that make up the dual consolidated loss have not been used to offset the income of another person under the tax laws of a foreign country. For taxable years beginning before January 1, 2003, the annual certification must be signed under penalties of perjury by a person authorized to sign the agreement described in paragraph (g)(2)(i) of this section. For taxable years beginning after December 31, 2002, the certification is verified by signing the return with which the certification is filed. The certification for a taxable year must identify the dual consolidated loss to which it pertains by setting forth the taxpayer's year in which the loss was incurred and the amount of such loss. In addition, the certification must warrant that arrangements have been made to ensure that the loss will not be used to offset the income of another person under the laws of a foreign country and that the taxpayer will be informed of any such foreign use of any portion of the loss. If dual consolidated losses of more than one taxable year are subject to the rules of this paragraph (g)(2)(vi)(B), the certifications for those years may be combined in a single document but each dual consolidated loss must be separately identified.

(g)(2)(vii) through (h) [Reserved]. For further guidance, *see* § 1.1503–2(g)(2)(vi) through (h).

[T.D. 9100, 68 FR 70707, Dec. 19, 2003]

§ 1.1504–0 Outline of provisions.

In order to facilitate the use of §§ 1.1504–1 through 1.1504–4, this section lists the captions contained in §§ 1.1504–1 through 1.1504–4.

§ 1.1504–1 Definitions.

§ 1.1504–2 [Reserved]

§ 1.1504–3 [Reserved]

§ 1.1504–4 Treatment of warrants, options, convertible obligations, and other similar interests.

(a) Introduction.
(1) General rule.
(2) Exceptions.
(b) Options not treated as stock or as exercised.
(1) General rule.
(2) Options treated as exercised.
(i) In general.
(ii) Aggregation of options.
(iii) Effect of treating option as exercised.
(A) In general.
(B) Cash settlement options, phantom stock, stock appreciation rights, or similar interests.
(iv) Valuation.
(3) Example.
(c) Definitions.
(1) Issuing corporation.
(2) Related or sequential option.
(3) Related persons.
(4) Measurement date.
(i) General rule.

(ii) Issuances, transfers, or adjustments not treated as measurement dates.
(iii) Transactions increasing likelihood of exercise.
(iv) Measurement date for options issued pursuant to a plan.
(v) Measurement date for related or sequential options.
(vi) Example.
(5) In-the-money.
(d) Options.
(1) Instruments treated as options.
(2) Instruments generally not treated as options.
(i) Options on section 1504(a)(4) stock.
(ii) Certain publicly traded options.
(A) General rule.
(B) Exception.
(iii) Stock purchase agreements.
(iv) Escrow, pledge, or other security agreements.
(v) Compensatory options.
(A) General rule.
(B) Exceptions.
(vi) Options granted in connection with a loan.
(vii) Options created pursuant to a title 11 or similar case.
(viii) Convertible preferred stock.
(ix) Other enumerated instruments.
(e) Elimination of federal income tax liability.
(f) Substantial amount of federal income tax liability.
(g) Reasonable certainty of exercise.
(1) Generally.
(i) Purchase price.
(ii) In-the-money option.
(iii) Not in-the-money option.
(iv) Exercise price.
(v) Time of exercise.
(vi) Related or sequential options.
(vii) Stockholder rights.
(viii) Restrictive covenants.
(ix) Intention to alter value.
(x) Contingencies.
(2) Cash settlement options, phantom stock, stock appreciation rights, or similar interests.
(3) Safe harbors.
(i) Options to acquire stock.
(ii) Options to sell stock.
(iii) Options exercisable at fair market value.
(iv) Exceptions.
(v) Failure to satisfy safe harbor.
(h) Examples.
(i) Effective date.

[T.D. 8462, 57 FR 61800, Dec. 29, 1992]

§ 1.1504–1 Definitions.

The privilege of filing consolidated returns is extended to all includible corporations constituting affiliated groups as defined in section 1504. See the regulations under § 1.1502 for a description of an affiliated group and the corporations which may be considered as includible corporations.

[T.D. 6500, 25 FR 12106, Nov. 26, 1960]

§§ 1.1504–2—1.1504–3 [Reserved]

§ 1.1504–4 Treatment of warrants, options, convertible obligations, and other similar interests.

(a) *Introduction*—(1) *General rule.* This section provides regulations under section 1504(a)(5) (A) and (B) regarding the circumstances in which warrants, options, obligations convertible into stock, and other similar interests are treated as exercised for purposes of determining whether a corporation is a member of an affiliated group. The fact that an instrument may be treated as an option under these regulations does not prevent such instrument from being treated as stock under general principles of law. Except as provided in paragraph (a)(2) of this section, this section applies to all provisions under the Internal Revenue Code and the regulations to which affiliation within the meaning of section 1504(a) (with or without the exceptions in section 1504(b)) is relevant, including those provisions that refer to section 1504(a)(2) (with or without the exceptions in section 1504(b)) without referring to affiliation, provided that the 80 percent voting power and 80 percent value requirements of section 1504(a)(2) are not modified therein.

(2) *Exceptions.* This section does not apply to sections 163(j), 864(e), or 904(i) or to the regulations thereunder. This section also does not apply to any other provision specified by the Internal Revenue Service in regulations, a revenue ruling, or revenue procedure. See § 601.601(d)(2)(ii)(*b*) of this chapter.

(b) *Options not treated as stock or as excerised*—(1) *General rule.* Except as provided in paragraph (b)(2) of this section, an option is not considered either as stock or as exercised. Thus, options are disregarded in determining whether a corporation is a member of an affiliated group unless they are described in paragraph (b)(2) of this section.

(2) *Options treated as exercised*—(i) *In general.* Solely for purposes of determining whether a corporation is a

member of an affiliated group, an option is treated as exercised if, on a measurement date with respect to such option—

(A) It could reasonably be anticipated that, if not for this section, the issuance or transfer of the option in lieu of the issuance, redemption, or transfer of the underlying stock would result in the elimination of a substantial amount of federal income tax liability (as described in paragraphs (e) and (f) of this section); and

(B) It is reasonably certain that the option will be exercised (as described in paragraph (g) of this section).

(ii) *Aggregation of options.* All options with the same measurement date are aggregated in determining whether the issuance or transfer of an option in lieu of the issuance, redemption, or transfer of the underlying stock would result in the elimination of a substantial amount of federal income tax liability.

(iii) *Effect of treating option as exercised*—(A) *In general.* An option that is treated as exercised is treated as exercised for purposes of determining the percentage of the value of stock owned by the holder and other parties, but is not treated as exercised for purposes of determining the percentage of the voting power of stock owned by the holder and other parties.

(B) *Cash settlement options, phantom stock, stock appreciation rights, or similar interests.* If a cash settlement option, phantom stock, stock appreciation right, or similar interest is treated as exercised, the option is treated as having been converted into stock of the issuing corporation. If the amount to be received upon the exercise of such an option is determined by reference to a multiple of the increase in the value of a share of the issuing corporation's stock on the exercise date over the value of a share of the stock on the date the option is issued, the option is treated as converted into a corresponding number of shares of such stock. Appropriate adjustments must be made in any situation in which the amount to be received upon exercise of the option is determined in another manner.

(iv) *Valuation.* For purposes of section 1504(a)(2)(B) and this section, all shares of stock within a single class are considered to have the same value. Thus, control premiums and minority and blockage discounts within a single class are not taken into account.

(3) *Example.* The provisions of paragraph (b)(2) of this section may be illustrated by the following example:

Example. (i) Corporation P owns all 100 shares of the common stock of Corporation S, the only class of S stock outstanding. Each share of S stock has a fair market value of $10 and has one vote. On June 30, 1992, P issues to Corporation X an option to acquire 80 shares of the S stock from P.

(ii) If, under the provisions of this section, the option is treated as exercised, then, solely for purposes of determining affiliation, P is treated as owning only 20 percent of the value of the outstanding S stock and X is treated as owing the remaining 80 percent of the value of the S stock. P is still treated as owning all of the voting power of S. Accordingly, because P is treated as owning less than 80 percent of the value of the outstanding S stock, P and S are no longer affiliated. However, because X is not treated as owning any of the voting power of S, X and S are also not affiliated.

(c) *Definitions.* For purposes of this section—

(1) *Issuing corporation.* ''Issuing corporation'' means the corporation whose stock is subject to an option.

(2) *Related or sequential option.* ''Related or sequential option'' means an option that is one of a series of options issued to the same or related persons. For purposes of this section, any options issued to the same person or related persons within a two-year period are presumed to be part of a series of options. This presumption may be rebutted if the facts and circumstances clearly establish that the options are not part of a series of options. Any options issued to the same person or related persons more than two years apart are presumed not to be part of a series of options. This presumption may be rebutted if the facts and circumstances clearly establish that the options are part of a series of options.

(3) *Related persons.* Persons are related if they are related within the meaning of section 267(b) (without the application of sections 267(c) and 1563(e)(1)) or 707(b)(1), substituting ''10 percent'' for ''50 percent'' wherever it appears.

(4) *Measurement date*—(i) *General rule.* ''Measurement date'' means a date on

which an option is issued or transferred or on which the terms of an existing option or the underlying stock are adjusted (including an adjustment pursuant to the terms of the option or the underlying stock).

(ii) *Issuances, transfers, or adjustments not treated as measurement dates.* A measurement date does not include a date on which—

(A) An option is issued or transferred by gift, at death, or between spouses or former spouses under section 1041;

(B) An option is issued or transferred—

(*1*) Between members of an affiliated group (determined with the exceptions in section 1504(b) and without the application of this section); or

(*2*) Between persons none of which is a member of the affiliated group (determined without the exceptions in section 1504(b) and without the application of this section), if any, of which the issuing corporation is a member, unless—

(*i*) Any such person is related to (or acting in concert with) the issuing corporation or any member of its affiliated group; and

(*ii*) The issuance or transfer is pursuant to a plan a principal purpose of which is to avoid the application of section 1504 and this section;

(C) An adjustment occurs in the terms or pursuant to the terms of an option or the underlying stock that does not materially increase the likelihood that the option will be exercised; or

(D) A change occurs in the exercise price of an option or in the number of shares that may be issued or transferred pursuant to the option as determined by a bona fide, reasonable, adjustment formula that has the effect of preventing dilution of the interests of the holders of the options.

(iii) *Transactions increasing likelihood of exercise.* If a change or alteration referred to in this paragraph (c)(4)(iii) is made for a principal purpose of increasing the likelihood that an option will be exercised, a measurement date also includes any date on which—

(A) The capital structure of the issuing corporation is changed; or

(B) The fair market value of the stock of the issuing corporation is altered through a transfer of assets to or from the issuing corporation (other than regular, ordinary dividends) or by any other means.

(iv) *Measurement date for options issued pursuant to a plan.* In the case of options issued pursuant to a plan, a measurement date for any of the options constitutes a measurement date for all options issued pursuant to the plan that are outstanding on the measurement date.

(v) *Measurement date for related or sequential options.* In the case of related or sequential options, a measurement date for any of the options constitutes a measurement date for all related or sequential options that are outstanding on the measurement date.

(vi) *Example.* The provisions of paragraph (c)(4)(v) of this section may be illustrated by the following example.

Example. (i) Corporation P owns all 80 shares of the common stock of Corporation S, the only class of S stock outstanding. On January 1, 1992, S issues a warrant, exercisable within 3 years, to U, an unrelated corporation, to acquire 10 newly issued shares of S common stock. On July 1, 1992, S issues a second warrant to U to acquire 10 additional newly issued shares of S common stock. On January 1, 1993, S issues a third warrant to T, a wholly owned subsidiary of U, to acquire 10 newly issued shares of S common stock. Assume that the facts and circumstances do not clearly establish that the options are not part of a series of options.

(ii) January 1, 1992, July 1, 1992, and January 1, 1993, constitute measurement dates for the first warrant, the second warrant, and the third warrant, respectively, because the warrants were issued on those dates.

(iii) Because the first and second warrants were issued within two years of each other, and both warrants were issued to U, the warrants constitute related or sequential options. Accordingly, July 1, 1992, constitutes a measurement date for the first warrant as well as for the second warrant.

(iv) Because the first, second, and third warrants were all issued within two years of each other, and were all issued to the same or related persons, the warrants constitute related or sequential options. Accordingly, January 1, 1993, constitutes a measurement date for the first and second warrants, as well as for the third warrant.

(5) *In-the-money.* ''In-the-money'' means the exercise price of the option is less than (or in the case of an option

to sell stock, greater than) the fair market value of the underlying stock.

(d) *Options*—(1) *Instruments treated as options.* For purposes of this section, except to the extent otherwise provided in this paragraph (d), the following are treated as options:

(i) A call option, warrant, convertible obligation, put option, redemption agreement (including a right to cause the redemption of stock), or any other instrument that provides for the right to issue, redeem, or transfer stock (including an option on an option); and

(ii) A cash settlement option, phantom stock, stock appreciation right, or any other similar interest (except for stock).

(2) *Instruments generally not treated as options.* For purposes of this section, the following will not be treated as options:

(i) *Options on section 1504(a)(4) stock.* Options on stock described in section 1504(a)(4);

(ii) *Certain publicly traded options*—(A) *General rule.* Options which on the measurement date are traded on (or subject to the rules of) a qualified board or exchange as defined in section 1256(g)(7), or on any other exchange, board of trade, or market specified by the Internal Revenue Service in regulations, a revenue ruling, or revenue procedure. See §601.601(d)(2)(ii)(*b*) of this chapter;

(B) *Exception.* Paragraph (d)(2)(ii)(A) of this section does not apply to options issued, transferred, or listed with a principal purpose of avoiding the application of section 1504 and this section. For example, a principal purpose of avoiding the application of section 1504 and this section may exist if warrants, convertible or exchangeable debt instruments, or other similar instruments have an exercise price (or, in the case of convertible or exchangeable instruments, a conversion or exchange premium) that is materially less than, or a term that is materially longer than, those that are customary for publicly traded instruments of their type. A principal purpose may also exist if a large percentage of an issuance of an instrument is placed with one investor (or group of investors) and a very small percentage of the issuance is traded on a qualified board or exchange;

(iii) *Stock purchase agreements.* Stock purchase agreements or similar arrangements whose terms are commercially reasonable and in which the parties' obligations to complete the transaction are subject only to reasonable closing conditions;

(iv) *Escrow, pledge, or other security agreements.* Agreements for holding stock in escrow or under a pledge or other security agreement that are part of a typical commercial transaction and that are subject to customary commercial conditions;

(v) *Compensatory options*—(A) *General rule.* Stock appreciation rights, warrants, stock options, phantom stock, or other similar instruments provided to employees, directors, or independent contractors in connection with the performance of services for the corporation or a related corporation (and that is not excessive by reference to the services performed) and which—

(*1*) Are nontransferable within the meaning of §1.83–3(d); and

(*2*) Do not have a readily ascertainable fair market value as defined in §1.83–7(b) on the measurement date;

(B) *Exceptions.* (*1*) Paragraph (d)(2)(v)(A) of this section does not apply to options issued or transferred with a principal purpose of avoiding the application of section 1504 and this section; and

(*2*) Paragraph (d)(2)(v)(A) of this section ceases to apply to options that become transferable;

(vi) *Options granted in connection with a loan.* Options granted in connection with a loan if the lender is actively and regularly engaged in the business of lending and the options are issued in connection with a loan to the issuing corporation that is commercially reasonable. This paragraph (d)(2)(vi) continues to apply if the option is transferred with the loan (or if a portion of the option is transferred with a corresponding portion of the loan). However, if the option is transferred without a corresponding portion of the loan, this paragraph (d)(2)(vi) ceases to apply;

(vii) *Options created pursuant to a title 11 or similar case.* Options created by the solicitation or receipt of acceptances to a plan of reorganization in a title 11 or similar case (within the

meaning of section 368(a)(3)(A)), the option created by the confirmation of the plan, and any option created under the plan prior to the time the plan becomes effective;

(viii) *Convertible preferred stock.* Convertible preferred stock, provided the terms of the conversion feature do not permit or require the tender of any consideration other than the stock being converted; and

(ix) *Other enumerated instruments.* Any other instruments specified by the Internal Revenue Service in regulations, a revenue ruling, or revenue procedure. See §601.601(d)(2)(ii)(*b*) of this chapter.

(e) *Elimination of federal income tax liability.* For purposes of this section, the elimination of federal income tax liability includes the elimination or deferral of federal income tax liability. In determining whether there is an elimination of federal income tax liability, the tax consequences to all involved parties are considered. Examples of elimination of federal income tax liability include the use of a loss or deduction that would not otherwise be utilized, the acceleration of a loss or deduction to a year earlier than the year in which the loss or deduction would otherwise be utilized, the deferral of gain or income to a year later than the year in which the gain or income would otherwise be reported, and the acceleration of gain or income to a year earlier than the year in which the gain or income would otherwise be reported, if such gain or income is offset by a net operating loss or net capital loss that would otherwise expire unused. The elimination of federal income tax liability does not include the deferral of gain with respect to the stock subject to the option that would be recognized if such stock were sold on a measurement date.

(f) *Substantial amount of federal income tax liability.* The determination of what constitutes a substantial amount of federal income tax liability is based on all the facts and circumstances, including the absolute amount of the elimination, the amount of the elimination relative to overall tax liability, and the timing of items of income and deductions, taking into account present value concepts.

(g) *Reasonable certainty of exercise*—(1) *Generally.* The determination of whether, as of a measurement date, an option is reasonably certain to be exercised is based on all the facts and circumstances, including:

(i) *Purchase price.* The purchase price of the option in absolute terms and in relation to the fair market value of the stock or the exercise price of the option;

(ii) *In-the-money option.* Whether and to what extent the option is in-the-money on the measurement date;

(iii) *Not in-the-money option.* If the option is not in-the-money on the measurement date, the amount or percentage by which the exercise price of the option is greater than (or in the case of an option to sell stock, is less than) the fair market value of the underlying stock;

(iv) *Exercise price.* Whether the exercise price of the option is fixed or fluctuates depending on the earnings, value, or other indication of economic performance of the issuing corporation;

(v) *Time of exercise.* The time at which, or the period of time during which, the option can be exercised;

(vi) *Related or sequential options.* Whether the option is one in a series of related or sequential options;

(vii) *Stockholder rights.* The existence of an arrangement (either within the option agreement or in a related agreement) that, directly or indirectly, affords managerial or economic rights in the issuing corporation that ordinarily would be afforded to owners of the issuing corporation's stock (e.g., voting rights, dividend rights, or rights to proceeds on liquidation) to the person who would acquire the stock upon exercise of the option or a person related to such person. For this purpose, managerial or economic rights in the issuing corporation possessed because of actual stock ownership in the issuing corporation are not taken into account;

(viii) *Restrictive covenants.* The existence of restrictive covenants or similar arrangements (either within the option agreement or in a related agreement) that, directly or indirectly, prevent or limit the ability of the issuing corporation to undertake certain activities while the option is outstanding (e.g.,

covenants limiting the payment of dividends or borrowing of funds);

(ix) *Intention to alter value.* Whether it was intended that through a change in the capital structure of the issuing corporation or a transfer of assets to or from the issuing corporation (other than regular, ordinary dividends) or by any other means, the fair market value of the stock of the issuing corporation would be altered for a principal purpose of increasing the likelihood that the option would be exercised; and

(x) *Contingencies.* Any contingency (other than the mere passage of time) to which the exercise of the option is subject (e.g., a public offering of the issuing corporation's stock or reaching a certain level of earnings).

(2) *Cash settlement options, phantom stock, stock appreciation rights, or similar interests.* A cash settlement option, phantom stock, stock appreciation right, or similar interest is treated as reasonably certain to be exercised if it is reasonably certain that the option will have value at some time during the period in which the option may be exercised.

(3) *Safe harbors*—(i) *Options to acquire stock.* Except as provided in paragraph (g)(3)(iv) of this section, an option to acquire stock is not considered reasonably certain, as of a measurement date, to be exercised if—

(A) The option may be exercised no more than 24 months after the measurement date and the exercise price is equal to or greater than 90 percent of the fair market value of the underlying stock on the measurement date; or

(B) The terms of the option provide that the exercise price of the option is equal to or greater than the fair market value of the underlying stock on the exercise date.

(ii) *Options to sell stock.* Except as provided in paragraph (g)(3)(iv) of this section, an option to sell stock is not considered reasonably certain, as of a measurement date, to be exercised if—

(A) The option may be exercised no more than 24 months after the measurement date and the exercise price is equal to or less than 110 percent of the fair market value of the underlying stock on the measurement date; or

(B) The terms of the option provide that the exercise price of the option is equal to or less than the fair market value of the underlying stock on the exercise date.

(iii) *Options exercisable at fair market value.* For purposes of paragraphs (g)(3)(i)(B) and (g)(3)(ii)(B) of this section, an option whose exercise price is determined by a formula is considered to have an exercise price equal to the fair market value of the underlying stock on the exercise date if the formula is agreed upon by the parties when the option is issued in a bona fide attempt to arrive at fair market value on the exercise date and is to be applied based upon the facts in existence on the exercise date.

(iv) *Exceptions.* The safe harbors of this paragraph (g)(3) do not apply if—

(A) An arrangement exists that provides the holder or a related party with stockholder rights described in paragraph (g)(1)(vii) of this section (except for rights arising upon a default under the option or a related agreement);

(B) It is intended that through a change in the capital structure of the issuing corporation or a transfer of assets to or from the issuing corporation (other than regular, ordinary dividends) or by any other means, the fair market value of the stock of the issuing corporation will be altered for a principal purpose of increasing the likelihood that the option will be exercised; or

(C) The option is one in a series of related or sequential options, unless all such options satisfy paragraph (g)(3) (i) or (ii) of this section.

(v) *Failure to satisfy safe harbor.* Failure of an option to satisfy one of the safe harbors of this paragraph (g)(3) does not affect the determination of whether an option is treated as reasonably certain to be exercised.

(h) *Examples.* The provisions of this section may be illustrated by the following examples. These examples assume that the measurement dates set forth in the examples are the only measurement dates that have taken place or will take place.

Example 1. (i) P is the common parent of a consolidated group, consisting of P, S, and T. P owns all 100 shares of S's only class of stock, which is voting common stock. P also owns all the stock of T. On June 30, 1992, when the fair market value of the S stock is

$40 per share, P sells to U, an unrelated corporation, an option to acquire 40 shares of the S stock that P owns at an exercise price of $30 per share, exercisable at any time within 3 years after the granting of the option. P and T have had substantial losses for 5 consecutive years while S has had substantial income during the same period. Because P, S, and T have been filing consolidated returns, P and T have been able to use all of their losses to offset S's income. It is anticipated that P, S, and T will continue their earnings histories for several more years. On July 31, 1992, S declares and pays a dividend of $1 per share to P.

(ii) If P, S, and T continue to file consolidated returns after June 30, 1992, it could reasonably be anticipated that P, S, and T would eliminate a substantial amount of federal income tax liability by using P's and T's future losses to offset S's income in consolidated returns. Furthermore, based on the difference between the exercise price of the option and the fair market value of the S stock, it is reasonably certain, on June 30, 1992, a measurement date, that the option will be exercised. Therefore, the option held by U is treated as exercised. As a result, for purposes of determining whether P and S are affiliated, P is treated as owning only 60 percent of the value of outstanding shares of S stock and U is treated as owning the remaining 40 percent. P is still treated as owning 100 percent of the voting power. Because members of the P group are no longer treated as owning stock possessing 80 percent of the total value of the S stock as of June 30, 1992, S is no longer a member of the P group. Additionally, P is not entitled to a 100 percent dividends received deduction under section 243(a)(3) because P and S are also treated as not affiliated for purposes of section 243. P is only entitled to an 80 percent dividends received deduction under section 243(c).

Example 2. (i) The facts are the same as in *Example 1* except that rather than P issuing an option to acquire 40 shares of S stock to U on June 30, 1992, P, pursuant to a plan, issues an option to U1 on July 1, 1992, to acquire 20 shares of S stock, and issues an option to U2 on July 2, 1992, to acquire 20 shares of S stock.

(ii) Because the options issued to U1 and U2 were issued pursuant to a plan, July 2, 1992, constitutes a measurement data for both options. Therefore, both options are aggregated in determining whether the issuance of the options, rather than the sale of the S stock, would result in the elimination of a substantial amount of federal income tax liability. Accordingly, as in *Example 1,* because the continued affiliation of P, S, and T could reasonably be anticipated to result in the elimination of a substantial amount of federal income tax liability and the options are reasonably certain to be exercised, the options are treated as exercised for purposes of determining whether P and S are affiliated, and P and S are no longer affiliated as of July 2, 1992.

Example 3. (i) The facts are the same as in *Example 1* except that the option gives U the right to acquire all 100 shares of the S stock, and U is the common parent of a consolidated group. The U group has had substantial losses for 5 consecutive years and it is anticipated that the U group will continue its earnings history for several more years.

(ii) If P sold the S stock, in lieu of the option, to U, S would become a member of the U group. Because the U group files consolidated returns, if P sold the S stock to U, U would be able to use its future losses to offset future income of S. When viewing the transaction from the effect on all parties, the sale of the option, in lieu of the underlying S stock, does not result in the elimination of federal income tax liability because S's income would be offset by the losses of members of either the P or U group. Accordingly, the option is disregarded and S remains a member of the P group.

Example 4. (i) P is the common parent of a consolidated group, consisting of P and S. P owns 90 of the 100 outstanding shares of S's only class of stock, which is voting common stock, and U, an unrelated corporation, owns the remaining 10 shares. On August 31, 1992, when the fair market value of the S stock is $100 per share, P sells a call option to U that entitles U to purchase 20 shares of S stock from P, at any time before August 31, 1993, at an exercise price of $115 per share. The call option does not provide U with any voting rights, dividend rights, or any other managerial or economic rights ordinarily afforded to owners of the S stock. There is no intention on August 31, 1992, to alter the value of S to increase the likelihood of the exercise of the call option.

(ii) Because the exercise price of the call option is equal to or greater than 90 percent of the fair market value of the S stock on August 31, 1992, a measurement date, the option may be exercised no more than 24 months after the measurement date, and none of the items described in paragraph (g)(3)(iv) of this section that preclude application of the safe harbor are present, the safe harbor of paragraph (g)(3)(i) of this section applies and the call option is treated as if it is not reasonably certain to be exercised. Therefore, regardless of whether the continued affiliation of P and S would result in the elimination of a substantial amount of federal income tax liability, the call option is disregarded in determining whether S remains a member of the P group.

Example 5. (i) The facts are the same as in *Example 4* except that the call option gives U the right to vote similar to that of a shareholder.

(ii) Under paragraph (g)(3)(iv) of this section, the safe harbor of paragraph (g)(3)(i) of this section does not apply because the call option entitles U to voting rights equivalent to that of a shareholder. Accordingly, all of the facts and circumstances surrounding the sale of the call option must be taken into consideration in determining whether it is reasonably certain that the call option will be exercised.

Example 6. (i) In 1992, two unrelated corporations, X and Y, decide to engage jointly in a new business venture. To accomplish this purpose, X organizes a new corporation, S, on September 30, 1992. X acquires 100 shares of the voting common stock of S, which are the only shares of S stock outstanding. Y acquires a debenture of S which is convertible, on September 30, 1995, into 100 shares of S common stock. If the conversion right is not exercised, X will have the right, on September 30, 1995, to put 50 shares of its S stock to Y in exchange for 50 percent of the debenture held by Y. The likelihood of the success of the venture is uncertain. It is anticipated that S will generate substantial losses in its early years of operation. X expects to have substantial taxable income during the three years following the organization of S.

(ii) Under the terms of this arrangement, it is reasonably certain on September 30, 1992, a measurement date, that on September 30, 1995, either through Y's exercise of its conversion right or X's right to put S stock to Y, that Y will own 50 percent of the S stock. Additionally, it could reasonably be anticipated, on September 30, 1992, a measurement date, that the affiliation of X and S would result in the elimination of a substantial amount of federal income tax liability. Accordingly, for purposes of determining whether X and S are affiliated, X is treated as owning only 50 percent of the value of the S stock as of September 30, 1992, a measurement date, and S is not a member of the X affiliated group.

Example 7. (i) The facts are the same as in *Example 6* except that rather than acquiring 100 percent of the S stock and the right to put S stock to Y, X acquires only 80 percent of the S stock, while S, rather than acquiring a convertible debenture, acquires 20 percent of the S stock, and an option to acquire an additional 30 percent of the S stock. The terms of the option are such that the option will only be exercised if the new business venture succeeds.

(ii) In contrast to *Example 6,* because of the true business risks involved in the start-up of S and whether the business venture will ultimately succeed, along with the fact that X does not have an option to put S stock to Y, it is not reasonably certain on September 30, 1992, a measurement date, that the option will be exercised and that X will only own 50 percent of the S stock on September 30, 1995. Accordingly, the option is disregarded in determining whether S is a member of the X group.

(i) *Effective date.* This section applies, generally, to options with a measurement date on or after February 28, 1992. This section does not apply to options issued prior to February 28, 1992, which have a measurement date on or after February 28, 1992, if the measurement date for the option occurs solely because of an adjustment in the terms of the option pursuant to the terms of the option as it existed on February 28, 1992. Paragraph (b)(2)(iv) of this section applies to stock outstanding on or after February 28, 1992.

[T.D. 8462, 57 FR 61801, Dec. 29, 1992; 58 FR 7041, Feb. 3, 1993]

REGULATIONS APPLICABLE FOR TAX YEARS FOR WHICH A RETURN IS DUE ON OR BEFORE AUGUST 11, 1999

§ 1.1502–9A Application of overall foreign loss recapture rules to corporations filing consolidated returns due on or before August 11, 1999.

(a) *Scope*—(1) *Effective date.* This section applies only to consolidated return years for which the due date of the income tax return (without extensions) is on or before August 11, 1999.

(2) *In general.* Affiliated group of corporations filing a consolidated return sustains an overall foreign loss (a consolidated overall foreign loss) in any taxable year in which its gross income from sources without the United States subject to a separate limitation (as defined in § 1.904(f)–1(c)(2)) is exceeded by the sum of the deductions properly allocated and apportioned thereto. However, for taxable years prior to 1983, affiliated groups may have determined their overall foreign losses for income subject to the passive interest limitation, DISC dividend limitation, and general limitation on a combined basis in accordance with the rules in § 1.904(f)–1(c)(1). The rules contained in §§ 1.904(f)–1 through 1.904(f)–6 are applicable to affiliated groups filing consolidated returns. This section provides special rules for applying those sections to such groups. Paragraph (b) provides rules for additions and subtractions of a portion of overall foreign

losses to and from consolidated overall foreign loss accounts. Paragraph (c) requires that separate notional overall foreign loss accounts be kept for each member of the group that contributes to a consolidated overall foreign loss account and provides for allocation of a portion of the group's overall foreign loss account to a member when the member leaves the group prior to recapture of the entire amount of the loss account. These rules are similar to the rules provided in § 1.1502–21(b)(2) (or § 1.1502-79A, as appropriate) concerning the apportionment of consolidated net operating losses to a member who leaves the group. However, the rules differ somewhat because the absorption rule of § 1.1502–21(b)(1) (or § 1.1502-79A, as appropriate) is applied year-by-year, consistently with the sequence rules of section 172(b), and recapture of overall foreign losses is based on overall foreign loss accounts that may consist of losses in more than one year. Paragraph (d) provides rules for recapture of amounts in consolidated overall foreign loss accounts. Paragraph (e) provides special rules pertaining to section 904(f)(3) dispositions between members of a group. Paragraphs (b), (c), and (e) also contain special rules that apply to overall foreign losses that arise in separate return limitation years; the principles therein also apply to overall foreign losses when there has been a consolidated return change of ownership (as defined in § 1.1502–1(g)). See § 1.1502–9T(b)(1)(v) for the rule that ends the separate return limitation year limitation for consolidated return years for which the due date of the income tax return (without extensions) is after March 13, 1998, and § 1.1502–9T(b)(1)(vi) for an election to continue the separate return limitation year limitation for consolidated return years beginning before January 1, 1998. See also § 1.1502–3(d)(4) for an optional effective date rule (generally making the rules of paragraphs (b)(1)(iii) and (iv) of this section inapplicable for a consolidated return year beginning after December 31, 1996, if the due date of the income tax return (without extensions) for such year is on or before March 13, 1998).

(b) *Consolidated overall foreign loss accounts.* Any group that sustains an overall foreign loss (or acquires a member with a balance in an overall foreign loss account) must establish a consolidated overall foreign loss account for such loss, and amounts shall be added to and subtracted from such account as provided in §§ 1.904(f)–1 through 1.904(f)–6 and this section.

(1) *Additions to the consolidated overall foreign loss accounts*—(i) *Consolidated overall foreign losses.* Any consolidated overall foreign loss shall be added to the applicable consolidated overall foreign loss account for such separate limitation, to the extent that the overall foreign loss has reduced United States source income, in accordance with the rules of §§ 1.904(f)–1 and 1.904(f)–3.

(ii) *Overall foreign losses from separate return years.* If a corporation joins in the filing of a consolidated return in a taxable year in which such corporation has a balance in an overall foreign loss account from a prior separate return year that is not a separate return limitation year, such balance shall be added to the applicable consolidated overall foreign loss account in such year and treated as a consolidated overall foreign loss incurred in the previous year (and shall therefore be subject to recapture, in accordance with paragraph (d) of this section, beginning in the same year in which it is added to the consolidated overall foreign loss account).

(iii) *Overall foreign losses from separate return limitation years.* If a corporation joins in the filing of a consolidated return in a taxable year in which such corporation has a balance in an overall foreign loss account from a prior separate return limitation year, such balance shall be added to the applicable consolidated overall foreign loss account in such consolidated return year to the extent of the lesser of the balance in the overall foreign loss account from the separate return limitation year or 50 percent (or such larger percentage as the taxpayer may elect) of the difference between the consolidated foreign source taxable income subject to the same separate limitation (computed in accordance with §§ 1.904(f)–2(b)

and 1.1502–4(d)(1)) minus such consolidated foreign source taxable income recomputed by excluding the items of income and deduction of such corporation (but not less than zero). The amount added to a consolidated overall foreign loss account in any taxable year under this paragraph (b)(1)(iii) shall be treated as a consolidated overall foreign loss in the previous year (and shall therefore be subject to recapture, in accordance with paragraph (d) of this section, beginning in the same year in which it is added to the consolidated overall foreign loss account).

(iv) *Overall foreign losses that are part of a net operating loss or net capital loss carried over from a separate return limitation year.* Overall foreign losses that are part of a net operating loss or net capital loss carryover from a separate return limitation year of a member that is absorbed in a consolidated return year shall be treated as though they were added to an overall foreign loss account in a separate return limitation year of such member and will be subject to the limitation on recapture of SRLY losses contained in paragraph (b)(1)(iii) of this section. See paragraph (c)(2) of this section for rules regarding the addition of such losses to the applicable overall foreign loss account of such member.

(v) *Special effective date for SRLY limitation.* Except as provided in paragraph (b)(1)(vi) of this section, paragraphs (b)(1)(iii) and (iv) of this section apply only to consolidated return years for which the due date of the income tax return (without extensions) is on or before March 13, 1998. For consolidated return years for which the due date of the income tax return (without extensions) is after March 13, 1998, the rules of paragraph (b)(1)(ii) of this section shall apply to overall foreign losses from separate return years that are separate return limitation years. For purposes of applying paragraph (b)(1)(ii) of this section in such years, the group treats a member with a balance in an overall foreign loss account from a separate return limitation year on the first day of the first consolidated return year for which the due date of the income tax return (without extensions) is after March 13, 1998, as a corporation joining the group on such first day. An overall foreign loss that is part of a net operating loss or net capital loss carryover from a separate return limitation year of a member that is absorbed in a consolidated return year for which the due date of the income tax return (without extensions) is after March 13, 1998, shall be added to the appropriate consolidated overall foreign loss account in the year that it is absorbed. For consolidated return years for which the due date of the income tax return (without extensions) is after March 13, 1998, similar principles apply to overall foreign losses when there has been a consolidated return change of ownership (regardless of when the change of ownership occurred). See also § 1.1502–3(d)(4) for an optional effective date rule (generally making this paragraph (b)(1)(v) applicable to a consolidated return year beginning after December 31, 1996, if the due date of the income tax return (without extensions) for such year is on or before March 13, 1998).

(vi) *Election to defer application of special effective date.* A consolidated group may elect not to apply paragraph (b)(1)(v) of this section to consolidated return years beginning before January 1, 1998. To make this election, a consolidated group must write ''Election Pursuant to Notice 98–40'' across the top of page 1 of an original or amended tax return for each consolidated return year subject to the election. For the first consolidated return year to which the overall foreign loss provisions of paragraph (b)(1)(v) of this section apply (i.e., the first year beginning on or after January 1, 1998), such consolidated group must write ''Notice 98–40 Election in Effect in Prior Years'' across the top of page 1 of the consolidated tax return for that year. For purposes of applying paragraph (b)(1)(ii) of this section with respect to such year, any member with a balance in an overall foreign loss account from a separate return limitation year on the first day of such year shall be treated as joining the group on such first day.

(2) *Reductions of the consolidated overall foreign loss accounts*—(i) *Amounts allocated to members leaving the group.* When a member leaves the group, each applicable consolidated overall foreign

loss account shall be reduced by the amount allocated from such account to such member in accordance with paragraph (c)(3)(i) of this section.

(ii) *Amounts recaptured.* A consolidated overall foreign loss account shall be reduced by the amount of any overall foreign loss under the same separate limitation that is recaptured from consolidated income in accordance with § 1.904(f)–2.

(c) *Allocation of overall foreign losses among members of an affiliated group*—(1) *Notional overall foreign loss accounts.* Separate notional overall foreign loss accounts shall be established for each member of a group that contributes to a consolidated overall foreign loss account. Additions to and reductions of such notional accounts shall be made when additions or reductions are made to consolidated overall foreign loss accounts in accordance with paragraph (b) of this section and § 1.904(f)–1.

(i) *Additions to notional accounts*—(A) *Consolidated overall foreign losses.* When a consolidated overall foreign loss is added to a consolidated overall foreign loss account, each member shall add its pro rata share of the amount of such loss to the member's notional overall foreign loss account. A member's pro rata share of a consolidated overall foreign loss for any taxable year is determined by multiplying the consolidated loss by a fraction.The numerator of this fraction is the amount by which the member's separate gross income for the taxable year from sources without the United States subject to the applicable separate limitation is exceeded by the sum of the deductions properly allocated and apportioned thereto (including such member's share of any consolidated net operating loss deduction and consolidated net capital loss carryovers and carrybacks to the taxable year), for each member with such deductions in excess of such income. The denominator of this fraction is the sum of the numerators of this fraction for all such members of the group.

(B) *Overall foreign losses from separate return years and separate return limitation years.* When an amount from a member's overall foreign loss account from a separate return year or separate return limitation year is added to a consolidated overall foreign loss account in accordance with paragraph (b)(1) (ii) or (iii) of this section, such amount shall also be added to that member's notional overall foreign loss account for such separate limitation.

(ii) *Reductions of notional accounts.* When a consolidated overall foreign loss account is reduced by recapture, in accordance with paragraph (b)(2)(ii) of this section, each member of the group shall reduce its notional overall foreign loss account for that separate limitation by its pro rata share of the amount by which the consolidated overall foreign loss account is reduced. A member's pro rata share of the amount by which a consolidated overall foreign loss account is reduced and determined by multiplying the amount recaptured by a fraction, the numerator of which is the amount in such member's notional account under such separate limitation, and the denominator of which is the amount in the consolidated overall foreign loss account under such separate limitation before reduction for the amount recaptured for that taxable year.

(2) *Overall foreign losses that are part of a net operating loss or net capital loss from a separate return limitation year.* An overall foreign loss that is part of a net operating loss or net capital loss carryover from a separate return limitation year of a member that is absorbed in a consolidated return year shall be treated as an overall foreign loss of such member (rather than the group) and shall be added to such member's separate overall foreign loss account to the extent it reduces United States source income, in accordance with § 1.904(f)–1(d)(5). Such overall foreign losses shall be added to the appropriate consolidated overall foreign loss account in later years in accordance with paragraph (b)(1)(iii) of this section.

(3) *Allocation of a portion of overall foreign loss accounts to a member leaving the group*—(i) *Consolidated overall foreign losses.* When a corporation ceases to be a member of an affiliated group filing consolidated returns, a portion of the balance in each applicable consolidated overall foreign loss account shall be allocated to such corporation. The amount allocated to such corporation shall be equal to the amount, if any, in such member's notional overall foreign

loss account under the same separate limitation.

(ii) *Overall foreign losses from separate return limitation years.* When a corporation ceases to be a member of an affiliated group filing consolidated returns, it shall take with it the remaining portion of each separate overall foreign loss account for overall foreign losses from separate return limitation years (including amounts added to such accounts under paragraph (c)(2) of this section).

(d) *Recapture of consolidated overall foreign losses.* The amount in any consolidated overall foreign loss account shall be recaptured under §§ 1.904(f)–1 through 1.904(f)–6 by recharacterizing consolidated foreign source taxable income subject to the separate limitation under which the loss arose as United States source taxable income. For purposes of recapture, consolidated foreign source taxable income subject to the separate limitation under which the loss arose shall be determined in accordance with §§ 1.904(f)–2 and 1.1502–4. Amounts in a member's excess loss account that are included in income under § 1.1502–19 shall be subject to recapture to the extent that they are included in consolidated foreign source taxable income subject to the separate limitation under which the loss arose.

(e) *Dispositions of property between members of the same affiliated group during a consolidated return year*—(1) *In general.* Except as provided in paragraph (2) with respect to overall foreign losses of a selling member from a separate return limitation year, the rules of § 1.1502–13 with respect to intercompany transactions will apply to dispositions of property to which section 904(f)(3)(A) applies.

(2) *Recapture of overall foreign loss from a separate return limitation year.* Paragraph (1) will not apply and gain will be recognized to the extent that the selling member has a balance in its overall foreign loss account from a separate return limitation year unless the selling member adds the entire amount of its overall foreign loss account from separate return limitation years to the applicable consolidated overall foreign loss account and treats such amount as an overall foreign loss incurred in the previous year. Such loss shall be subject to recapture, in accordance with paragraph (d) of § 1.1502–9, beginning in the same year in which it is added to the consolidated overall foreign loss account.

(f) *Illustrations.* The provisions of this section are illustrated by the following examples. All foreign source income or loss in these examples is subject to the general limitation.

Example (1). A, B, and C are the members of an affiliated group of corporations (as defined in section 1504), and all use the calendar year as their taxable year. For 1983, A, B, and C file a consolidated return. ABC has United States source income of $1,000 and foreign source losses (overall foreign loss) of $400. In accordance with paragraph (b)(1)(i) of this section, ABC adds $400 to its consolidated overall foreign loss account at the end of 1983. For 1983, the separate foreign source taxable income (or loss) of A is $400, of B is ($200), and of C is ($600). Under paragraph (c)(1) of this section, B and C must establish separate notional overall foreign loss accounts. Under paragraph (c)(1)(i)(A) of this section, the amount added to each notional account is the pro rata share of the consolidated overall foreign loss of each member contributing to such loss. The pro rata share is determined by multiplying the consolidated loss by the member's proportionate share of the total foreign source losses of all members having such losses. B's foreign source loss if $200 and C's foreign source loss is $600, totaling $800. B must add $400×200/800, or $100, to its notional overall foreign loss account. C must add $400×600/800, or $300, to its notional overall foreign loss account.

Example (2). The facts are the same as in example (1). In 1984, ABC has consolidated foreign source taxable income of $200. Under paragraph (d) of this section and § 1.904(f)–2, ABC is required to recapture $100 of the amount in its consolidated overall foreign loss account, which reduces that account by $100 under paragraph (b)(2)(ii) of this section. In accordance with paragraph (c)(1)(ii) of this section, B reduces its notional account by $100×100/400, or $25, and C reduces it notional account by $100×300/400, or $75. At the end of 1984 ABC has $300 in its consolidated overall foreign loss account, B has $75 in its notional account, and C has $225 in its notional account.

Example (3). D and E are members of an affiliated group and file separate returns using the calendar year as their taxable year for 1980. In 1980, D has an overall foreign loss of $200, which it adds to its overall foreign loss account, and E has no overall foreign losses. For 1981, D and E file a consolidated return, and DE must establish a consolidated overall foreign loss account, to which D's overall

foreign loss from 1980 is added under paragraph (b)(1)(ii) of this section. D also adds the same amount $200 to its notional account under paragraph (c)(1)(i)(B) of this section. In 1981, DE has consolidated foreign source taxable income of $300. Since the amount added to the consolidated overall foreign loss account in 1981 is treated as a consolidated overall foreign loss from 1980, DE must recapture $150 in 1981 under paragraph (d) of this section and § 1.904(f)–2. DE's consolidated overall foreign loss account is reduced by $150 under paragraph (b)(2)(ii) of this section, and D's notional account is reduced by $150 under paragraph (c)(1)(ii) of this section, leaving balances of $50 in each of those accounts at the end of 1981.

Example (4). F and G are not members of an affiliated group in 1980, and G has an overall foreign loss of $200, which it adds to its overall foreign loss account. F has no overall foreign loss. On January 1, 1981, F acquires G, and FG files a consolidated return for the calendar year 1981. In 1981, F has no foreign source taxable income or loss, and G has $100 of foreign source taxable income. FG's consolidated foreign source taxable income, $100, minus such income without G's items of income and deduction, $0, is $100. Therefore 50% of that amount, $50, of G's overall foreign loss from its 1980 separate return limitation year is added to FG's consolidated overall foreign loss account under paragraph (b)(1)(iii) of this section, and the same amount is added to G's notional account under paragraph (c)(1)(i)(B) of this section. In accordance with paragraph (d) of this section and § 1.904(f)–2, FG must recapture the $50 balance in its consolidated overall foreign loss account in 1981 because the amount added from G's separate return limitation year is treated as a 1980 consolidated overall foreign loss. At the end of 1981, FG has a balance of $0 in its consolidated overall foreign loss account, G has $0 in its notional account, and G also has $150 remaining from its 1980 overall foreign loss that has not yet been added to the consolidated overall foreign loss account.

On January 1, 1982, F sells G and G leaves the affiliated group. Under paragraph (c)(3)(i) of this section, G takes with it the balance in its overall foreign loss account from 1980 (its prior separate return limitation year) that has not been added to the consolidated account. G has $150 of overall foreign loss in its overall foreign loss account. Because the amount in the consolidated overall foreign loss account is zero, no amount from that account is allocated to G.

Example (5). (i) In 1982 corporation H has United States source income of $300 and foreign source losses of $500, resulting in a net operating loss of $200 and a balance in H's overall foreign loss account at the end of 1982 of $300.

(ii) On January 1, 1983, H is acquired by J, and for the calendar year 1983 JH files a consolidated return. JH has consolidated taxable income of $700 in 1983, including a consolidated net operating loss deduction of $100. This net operating loss deduction is $100 of H's $200 net operating loss from 1982 (a separate return limitation year), which is limited by § 1.1502–21A(c). For 1983, H has separate taxable income of $100, comprised of $100 of United States source taxable income and zero foreign source taxable income, and J has separate taxable income of $700, comprised of $700 of United States source taxable income and zero foreign source taxable income. Under paragraph (c)(2) of this section, H adds $100 to its separate overall foreign loss account, since that amount of its net operating loss has reduced United States source income. H has $400 in its separate overall foreign loss account at the end of 1983, none of which has been added to a consolidated overall foreign loss account.

(iii) In 1984, H has separate taxable income of $400, comprised of $100 of United States source taxable income and $300 of foreign source taxable income. J has separate taxable income of $900, comprised of $700 of United States source taxable income and $200 of foreign source taxable income. JH has consolidated taxable income of $1200, which includes $100 of consolidated net operating loss deduction from H's 1982 net operating loss. Since this net operating loss deduction is allocated to foreign source income, it does not reduce United States source income and will not be added to an overall foreign loss account. Under paragraph (b)(1)(iii) of this section, $100, from H's overall foreign loss is added to the consolidated overall foreign loss account computed as follows:

Consolidated foreign source taxable income	$400
Consolidated foreign source taxable income recomputed by excluding H's foreign source income and deduction	– 200
$200.	
× 50%	$100
Amount from H's separate return limitation year overall foreign loss account added to the consolidated overall foreign loss account	$100

This amount is subject to recapture beginning in the same taxable year, as it is treated as a consolidated overall foreign loss incurred in a previous year. Therefore, under paragraph (d) of this section and § 1.904(f)–2 JH also recaptures this $100, reducing the consolidated overall foreign loss account to $0. H has $300 remaining in its separate overall foreign loss account at the end of 1984.

(iv) In 1985, H has separate taxable income of $400, comprised of $100 of United States source taxable income and $300 of foreign source taxable income. J has separate taxable income of $300 comprised of $600 of United States source taxable income and $300 of foreign source losses. JH has consolidated

taxable income of $700, all of which is United States source. Under paragraph (b)(1)(iii) of this section an additional $150 from H's separate overall foreign loss is added to the consolidated overall foreign loss account, computed as follows:

Consolidated foreign source taxable income	$0
Consolidated foreign source taxable income recomputed by excluding H's foreign source income and deductions	–(300)
300.	
× 50%	$150
Amount from H's separate return limitation year overall foreign loss account added to the consolidated overall foreign loss account	$150

Thus, an additional $150 of H's separate overall foreign loss is added to the consolidated overall foreign loss account, and, under paragraph (c)(1)(i)(B) of this section, the same amount is added to J's notional account. While this amount is subject to recapture beginning in the same taxable year, JH has no consolidated foreign source taxable income in 1985, so no overall foreign loss is recaptured. H has a remaining balance of $150 in its separate return limitation year overall foreign loss account and HJ has $150 in its consolidated overall foreign loss account.

Example (6). A, B, and C are members of an affiliated group of corporations (as defined in section 1504), and all use the calendar year as their taxable year. For 1986, A, B, and C file a consolidated return. A has an overall foreign loss account which arose in a separate return limitation year. The amount in the overall foreign loss account is $2,000. A makes a disposition of all its assets to B on January 1, 1986. The gain on the transfer is $1,500, all of which would be recognized under section 904(f)(3). However, if A adds the total amount of its overall foreign loss from separate return limitation years to ABC's consolidated overall foreign loss account, no gain will be recognized on the transfer until the intercompany gain is taken into account under § 1.1502–13. In the interim, any foreign source gain of the purchasing member (or any other member of the consolidated group) may be used to recapture on a consolidated basis the amount in ABC's consolidated overall foreign loss account.

[T.D. 8153, 52 FR 32005, Aug. 25, 1987; 52 FR 43434, Nov. 12, 1987, as amended by T.D. 8597, 60 FR 36679, July 18, 1995; T.D. 8677, 61 FR 33323, June 27, 1996; T.D. 8766, 63 FR 12643, Mar. 16, 1998; T.D. 8800, 63 FR 71590, Dec. 29, 1998; T.D. 8823, 64 FR 36099, July 2, 1999; Redesignated and amended by T.D. 8833, 64 FR 43615, Aug. 11, 1999; T.D. 8884, 65 FR 33760, May 25, 2000]

REGULATIONS APPLICABLE TO TAXABLE YEARS BEFORE JANUARY 1, 1997

§ 1.1502–15A Limitations on the allowance of built-in deductions for consolidated return years beginning before January 1, 1997.

(a) *Limitation on built-in deductions*—(1) *General rule.* Built-in deductions (as defined in subparagraph (2) of this paragraph) for a taxable year shall be subject to the limitation of § 1.1502–21A(c) (determined without regard to such deductions and without regard to net operating loss carryovers to such year) and the limitation of § 1.1502–22A(c) (determined without regard to such deductions and without regard to capital loss carryovers to such year). If as a result of applying such limitations, built-in deductions are not allowable in such consolidated return year, such deductions shall be treated as a net operating loss or net capital loss (as the case may be) sustained in such year and shall be carried to those taxable years (consolidated or separate) to which a consolidated net operating loss or a consolidated net capital loss could be carried under §§ 1.1502–21A, 1.1502–22A and 1.1502–79A, (or §§ 1.1502-21T and 1.1502-22T, as appropriate) except that such losses shall be treated as losses subject to the limitations contained in §§ 1.1502–21T(c) or 1.1502-22T(c) (or §§ 1.1502-21A(c), 1.1502–22A(c), as appropriate), as the case may be. Thus, for example, if member X sells a capital asset during a consolidated return year at a $1,000 loss and such loss is treated as a built-in deduction, then such loss shall be subject to the limitation contained in § 1.1502–22(c), which, in general, would allow such loss to be offset only against X's own capital gain net income (net capital gain for taxable years beginning before January 1, 1977). Assuming X had no capital gain net income (net capital gain for taxable years beginning before January 1, 1977) reflected in such year (after taking into account its capital losses, other than capital loss carryovers and the built-in deduction), such $1,000 loss shall be treated as a net capital loss and shall be carried over for 5 years under § 1.1502–22, subject to the limitation contained in § 1.1502–22(c) for consolidated return years.

(2) *Built-in deductions.* (i) For purposes of this paragraph, the term ''built-in deductions'' for a consolidated return year means those deductions or losses of a corporation which are recognized in such year, or which are recognized in a separate return year and carried over in the form of a net operating or net capital loss to such year, but which are economically accrued in a separate return limitation year (as defined in §1.1502–1(f)). Such term does not include deductions or losses incurred in rehabilitating such corporation. Thus, for example, assume P is the common parent of a group filing consolidated returns on the basis of a calendar year and that P purchases all of the stock of S on December 31, 1966. Assume further that on December 31, 1966, S owns a capital asset with an adjusted basis of $100 and a fair market value of $50. If the group files a consolidated return for 1967, and S sells the asset for $30, $50 of the $70 loss is treated as a built-in deduction, since it was economically accrued in a separate return limitation year. If S sells the asset for $80 instead of $30, the $20 loss is treated as a built-in deduction. On the other hand, if such asset is a depreciable asset and is not sold by S, depreciation deductions attributable to the $50 difference between basis and fair market value are treated as built-in deductions.

(ii) In determining, for purposes of subdivision (i) of this subparagraph, whether a deduction or loss with respect to any asset is economically accrued in a separate return limitation year, the term ''predecessor'' as used in §1.1502–1(f)(1) shall include any transferor of such asset if the basis of the asset in the hands of the transferee is determined (in whole or in part) by reference to its basis in the hands of such transferor.

(3) *Transitional rule.* If the assets which produced the built-in deductions were acquired (either directly or by acquiring a new member) by the group on or before January 4, 1973, and the separate return limitation year in which such deductions were economically accrued ended before such date, then at the option of the taxpayer, the provisions of this paragraph before amendment by T.D. 7246 shall apply, and, in addition, if such assets were acquired on or before April 17, 1968, and the separate return limitation year in which the built-in deductions were economically accrued ended on or before such date, then at the option of the taxpayer, the provisions of §1.1502–31A(b)(9)(as contained in the 26 C.F.R. edition revised as of April 1, 1996) shall apply in lieu of this paragraph.

(4) *Exceptions.* (i) Subparagraphs (1), (2), and (3) of this paragraph shall not limit built-in deductions in a taxable year with respect to assets acquired (either directly or by acquiring a new member) by the group if:

(*a*) The group acquired the assets more than 10 years before the first day of such taxable year, or

(*b*) Immediately before the group acquired the assets, the aggregate of the adjusted basis of all assets (other than cash, marketable securities, and goodwill) acquired from the transferor or owned by the new member did not exceed the fair market value of all such assets by more than 15 percent.

(ii) For purposes of subdivision (i)(*b*) of this subparagraph, a security is not a marketable security if immediately before the group acquired the assets:

a) The fair market value of the security is less than 95 percent of its adjusted basis, or

(*b*) The transferor or new member had held the security for at least 24 months, or

(*c*) The security is stock in a corporation at least 50 percent of the fair market value of the outstanding stock of which is owned by the transferor or new member.

(b) *Effective date.* This section applies to any consolidated return years to which §1.1502–21T does not apply. See §1.1502–21T(g) for effective dates of that section.

[T.D. 6894, 31 FR 11794, Sept. 8, 1966, as amended by T.D. 6909, 31 FR 16695, Dec. 30, 1966; T.D. 7246, 37 FR 761, Jan. 4, 1972; T.D. 7728, 45 FR 72650, Nov. 3, 1980; T.D. 8677, 61 FR 33323, June 27, 1996. Redesignated and amended by T.D. 8677, 61 FR 33326, June 27, 1996]

§ 1.1502–21A Consolidated net operating loss deduction generally applicable for consolidated return years beginning before January 1, 1997.

(a) *In general.* The consolidated net operating loss deduction shall be an amount equal to the aggregate of the consolidated net operating loss carryovers and carrybacks to the taxable year (as determined under paragraph (b) of this section).

(b) *Consolidated net operating loss carryovers and carrybacks*—(1) *In general.* The consolidated net operating loss carryovers and carrybacks to the taxable year shall consist of any consolidated net operating losses (as determined under paragraph (f) of this section) of the group, plus any net operating losses sustained by members of the group in separate return years, which may be carried over or back to the taxable year under the principles of section 172(b). However, such consolidated carryovers and carrybacks shall not include any consolidated net operating loss apportioned to a corporation for a separate return year pursuant to § 1.1502–79A(a), and shall be subject to the limitations contained in paragraphs (c), (d), and (e) of this section and to the limitation contained in § 1.1502–15A (or § 1.1502–11(c), as appropriate).

(2) *Rules for applying section 172(b)(1)*—(i) *Regulated transportation corporations.* For purposes of applying section 172(b)(1)(C) (relating to net operating losses sustained by regulated transportation corporations), in the case of a consolidated net operating loss sustained in a taxable year for which a member of the group was a regulated transportation corporation (as defined in section 172(j)(1)), the portion, if any, of such consolidated net operating loss which is attributable to such corporation (as determined under this paragraph shall be a carryover to the sixth taxable year following the loss year only if such corporation is a regulated transportation corporation for such sixth year, and shall be a carryover to the seventh taxable year following the loss year only if such corporation is a regulated transportation corporation for both such sixth and seventh years.

(ii) *Trade expansion losses.* In the case of a carryback of a consolidated net operating loss from a taxable year for which a member of the group has been issued a certification under section 317 of the Trade Expansion Act of 1962 and with respect to which the requirements of section 172(b)(3)(A) have been met, section 172(b)(1)(A)(ii) shall apply only to the portion of such consolidated net operating loss attributable to such member.

(iii) *Foreign expropriation losses.* An election under section 172(b)(3)(C) (relating to 10-year carryover of portion of net operating loss attributable to a foreign expropriation loss) may be made for a consolidated return year only if the sum of the foreign expropriation losses (as defined in section 172(k)) of the members of the group for such year equals or exceeds 50 percent of the consolidated net operating loss for such year. If such election is made, the amount which may be carried over under section 172(b)(1)(D) is the smaller of (*a*) the sum of such foreign expropriation losses, or (*b*) the consolidated net operating loss.

(3) *Absorption rules.* For purposes of determining the amount, if any, of a net operating loss (whether consolidated or separate) which can be carried to a taxable year (consolidated or separate), the amount of such net operating loss which is absorbed in a prior consolidated return year under section 172(b)(2) shall be determined by:

(i) Applying all net operating losses which can be carried to such prior year in the order of the taxable years in which such losses were sustained, beginning with the taxable year which ends earliest, and

(ii) Applying all such losses which can be carried to such prior year from taxable years ending on the same date on a pro rata basis, except that any portion of a net operating loss attributable to a foreign expropriation loss to which section 172(b)(1)(D) applies shall be applied last.

(c) *Limitation on net operating loss carryovers and carrybacks from separate return limitation years*—(1) *General rule.* In the case of a net operating loss of a member of the group arising in a separate return limitation year (as defined in paragraph (f) of § 1.1502–1) of such

member (and in a separate return limitation year of any predecessor of such member), the amount which may be included under paragraph (b) of this section (computed without regard to the limitation contained in paragraph (d) of this section) in the consolidated net operating loss carryovers and carrybacks to a consolidated return year of the group shall not exceed the amount determined under subparagraph (2) of this paragraph.

(2) *Computation of limitation.* The amount referred to in subparagraph (1) of this paragraph with respect to a member of the group is the excess, if any, of:

(i) Consolidated taxable income (computed without regard to the consolidated net operating loss deduction), minus such consolidated taxable income recomputed by excluding the items of income and deduction of such member, over

(ii) The net operating losses attributable to such member which may be carried to the consolidated return year arising in taxable years ending prior to the particular separate return limitation year.

(3) *Examples.* The provisions of this paragraph and paragraphs (a) and (b) of this section may be illustrated by the following examples:

Example (1). (i) Corporation P formed corporations S and T on January 1, 1965. P, S, and T filed separate returns for the calendar year 1965, a year for which an election under section 1562 was effective. T's return for that year reflected a net operating loss of $10,000. The group filed a consolidated return for 1966 reflecting consolidated taxable income of $30,000 (computed without regard to the consolidated net operating loss deduction). Among the transactions occurring during 1966 were the following:

(*a*) P sold goods to T deriving deferred profits of $7,000 on such sales, $2,000 of which was restored to consolidated taxable income on the sale of such goods to outsiders;

(*b*) T sold a machine to S deriving a deferred profit of $5,000, $1,000 of which was restored to consolidated taxable income as a result of S's depreciation deductions;

(*c*) T distributed a $3,000 dividend to P; and

(*d*) In addition to the transactions described above, T had other taxable income of $6,000.

(ii) The carryover of T's 1965 net operating loss to 1966 is subject to the limitation contained in this paragraph, since 1965 was a separate return limitation year (an election under section 1562 was effective for such year). Thus, only $7,000 of T's $10,000 net operating loss is a consolidated net operating loss carryover to 1966, since such carryover is limited to consolidated taxable income (computed without regard to the consolidated net operating loss deduction), $30,000, minus such consolidated taxable income recomputed by excluding the items of income and deduction of T, $23,000 (*i.e.*, consolidated taxable income computed without regard to the $1,000 restoration of T's deferred gain and T's $6,000 of other income). In making such recomputation, no change is made in the effect on consolidated taxable income of P's sale to T, or of the dividend from T to P.

Example (2). (i) Corporation P was formed on January 1, 1966. P filed separate returns for the calendar years 1966 and 1967 reflecting net operating losses of $4,000 and $12,000, respectively. P purchased corporation S on March 15, 1967. S was formed on February 1, 1966, and filed a separate return for the taxable year ending January 31, 1967. S also filed a short period return for the period from February 1 to December 31, 1967, and joined with P in filing a consolidated return for 1968. S sustained net operating losses of $5,000 and $6,000 for its taxable years ending January 31, 1967, and December 31, 1967, respectively. An election under section 1562 was not effective for P and S during the period involved. Consolidated taxable income for 1968 (computed without regard to the consolidated net operating loss deduction) was $16,000; such consolidated taxable income recomputed by disregarding the items of income and deduction of S was $9,000.

(ii) In order of time, the following losses are absorbed in 1968:

(*a*) P's $4,000 net operating loss for the calendar year 1966 (such loss is not subject to the limitation contained in this paragraph since P is the common parent corporation for 1968);

(*b*) S's $5,000 net operating loss for the year ended January 31, 1967. Such loss is subject to the limitation contained in this paragraph, since S was not a member of the group on each day of such year. However, such loss can be carried over and absorbed in full since such limitation is $7,000 (consolidated taxable income computed without regard to the consolidated net operating loss deduction, $16,000, minus such consolidated taxable income recomputed, $9,000); and

(*c*) $6,000 of P's net operating loss and $1,000 of S's net operating loss for the taxable years ending December 31, 1967. This is determined by applying the losses from such year which can be carried to 1968 (P's $12,000 loss and $2,000 of S's $6,000 loss, since such $6,000 loss is limited under this paragraph) on a pro rata basis against the amount of such losses which can be absorbed in that year, $7,000 (consolidated taxable income of $16,000 less the $9,000 of losses absorbed from prior

years). The carryover of S's loss to 1968 is subject to the limitation contained in that paragraph, since S was not a member of the group on each day of its taxable year ending December 31, 1967. Such loss is limited to $2,000, the excess of $7,000 (as determined under (ii)(*b*)) over $5,000 (S's carryover from the year ended January 31, 1967). If a consolidated return is filed in 1969, the consolidated net operating loss carryovers will consist of P's unabsorbed loss of $6,000 ($12,000 minus $6,000) from 1967 and, subject to the limitation contained in this paragraph, S's unabsorbed loss of $5,000 ($6,000 minus $1,000) from its year ended December 31, 1967.

(d) *Limitation on carryovers where there has been a consolidated return change of ownership*—(1) *General rule.* If a consolidated return change of ownership (as defined in paragraph (g) of § 1.1502–1) occurs during the taxable year or an earlier taxable year, the amount which may be included under paragraph (b) of this section in the consolidated net operating loss carryovers to the taxable year with respect to the aggregate of the net operating losses attributable to old members of the group (as defined in paragraph (g)(3) of § 1.1502–1) arising in taxable years (consolidated or separate) ending on the same day and before the taxable year in which the consolidated return change of ownership occurred shall not exceed the amount determined under subparagraph (2) of this paragraph.

(2) *Computation of limitation.* The amount referred to in subparagraph (1) of this paragraph shall be the excess of:

(i) The consolidated taxable income for the taxable year (determined without regard to the consolidated net operating loss deduction) recomputed by including only the items of income and deduction of the old members of the group, over

(ii) The sum of the net operating losses attributable to the old members of the group which may be carried to the taxable year arising in taxable years ending prior to the particular loss year or years.

(3) *Example.* The provisions of this paragraph may be illustrated by the following example:

Example. (i) Corporation P is formed on January 1, 1967, and on the same day it forms corporation S. P and S file a consolidated return for the calendar year 1967, reflecting a consolidated net operating loss of $500,000. On January 1, 1968, individual X purchases all of the outstanding stock of P. X subsequently contributes $1,000,000 to P and P purchases the stock of corporation T. P, S, and T file a consolidated return for 1968 reflecting consolidated taxable income of $600,000 (computed without regard to the consolidated net operating loss deduction). Such consolidated taxable income recomputed by including only the items of income and deduction of P and S is $350,000.

(ii) Since a consolidated return change of ownership took place in 1968 (there was more than a 50 percent change of ownership of P), the amount of the consolidated net operating loss from 1967 which can be carried over to 1968 is limited to $350,000, the excess of $350,000 (consolidated taxable income recomputed by including only the items of income and deduction of the old members of the group, P and S) over zero (the amount of the consolidated net operating loss carryovers attributable to the old members of the group arising in taxable years ending before 1967).

(4) *Cross-reference.* See § 1.1502–21T(d)(1) for the rule that applies the principles of this paragraph (d) in consolidated return years beginning on or after January 1, 1997, with respect to a consolidated return change of ownership occurring before January 1, 1997.

(e) *Limitations on net operating loss carryovers under section 382*—(1) *Section 382(a).* (i) If at the end of a taxable year (consolidated or separate) there has been an increase in ownership of the stock of the common parent of a group (within the meaning of section 382(a)(1)(A) and (B)), and any member of the group has not continued to carry on a trade or business substantially the same as that conducted before any such increase (within the meaning of section 382(a)(1)(C)), then the portion of any consolidated net operating loss sustained in prior taxable years attributable to such member (as determined under this paragraph shall not be allowed as a carryover to such taxable year or to any subsequent taxable year.

(ii) If the provisions of section 382(a) disallow the deduction of a net operating loss carryover from a separate return year of a member of the group to a subsequent taxable year, no amount shall be included under paragraph (b) of this section as a consolidated net operating loss carryover to such a subsequent consolidated return year with respect to such separate return year of such member.

(iii) The provisions of this subparagraph may be illustrated by the following example:

Example. P, S, and T file a consolidated return for the calendar year 1969, reflecting a consolidated net operating loss attributable in part to each member. P owns 80 percent of S's stock and S owns 80 percent of T's stock. On January 1, 1970, A purchases 50 percent of P's stock. During 1970 T's business is discontinued. Since there has been a 50 percentage point increase in ownership of P, the common parent of the group, and since T has not continued to carry on the same trade or business after such increase, the portion of the 1969 consolidated net operating loss attributable to T shall not be included in any net operating loss deduction for 1970 or for any subsequent taxable years, whether consolidated or separate.

(2) *Section 382(b).* If a net operating loss carryover from a separate return year of a predecessor of a member of the group to the taxable year is reduced under the provisions of section 382(b), the amount included under paragraph (b) of this section with respect to such predecessor shall be so reduced.

(3) *Effective date.* This paragraph (e) disallows or reduces the net operating loss carryovers of a member as a result of a transaction to which old section 382 (as defined in §1.382–2T(f)(21)) applies. See §1.1502–21T(d)(2) for the rule that applies the principles of this paragraph (e) in consolidated return years beginning on or after January 1, 1997, with respect to such a transaction.

(f) *Consolidated net operating loss.* The consolidated net operating loss shall be determined by taking into account the following:

(1) The separate taxable income (as determined under §1.1502–12) of each member of the group, computed without regard to any deduction under section 242;

(2) Any consolidated capital gain net income (net capital gain for taxable years beginning before January 1, 1977);

(3) Any consolidated section 1231 net loss;

(4) Any consolidated charitable contributions deduction;

(5) Any consolidated dividends received deduction (determined under §1.1502–26 without regard to paragraph (a)(2) of that section); and

(6) Any consolidated section 247 deduction (determined under §1.1502–27 without regard to paragraph (a)(1)(ii) of that section).

(g) *Groups that include insolvent financial institutions.* For rules applicable to relinquishing the entire carryback period with respect to losses attributable to insolvent financial institutions, see §301.6402–7 of this chapter.

(h) *Effective date.* Except as provided in §1.1502–21T (d)(1), (d)(2), and (g)(3), this section applies to consolidated return years beginning before January 1, 1997.

[T.D. 6894, 31 FR 11794, Sept. 8, 1966, as amended by T.D. 7728, 45 FR 72650, Nov. 3, 1980; T.D. 8387, 56 FR 67489, Dec. 31, 1991; T.D. 8446, 57 FR 53034, Nov. 6, 1992; T.D. 8677, 61 FR 33323, June 27, 1996. Redesignated and amended by T.D. 8677, 61 FR 33328, June 27, 1996]

§1.1502–22A Consolidated net capital gain or loss generally applicable for consolidated return years beginning before January 1, 1997.

(a) *Computation*—(1) *Consolidated capital gain net income.* The consolidated capital gain net income (net capital gain for taxable years beginning before January 1, 1977) for the taxable year shall be determined by taking into account:

(i) The aggregate of the capital gains and losses (determined without regard to gains or losses to which section 1231 applies or net capital loss carryovers or carrybacks) of the members of the group for the consolidated return year,

(ii) The consolidated section 1231 net gain for such year (computed in accordance with §§1.1502–23A or 1.1502–23T), and

(iii) The consolidated net capital loss carryovers or carrybacks to such year (as determined under paragraph (b) of this section).

(2) *Consolidated net capital loss.* The consolidated net capital loss shall be determined under subparagraph (1) of this paragraph but without regard to subdivision (iii) thereof.

(3) *Special rules.* For purposes of this section, capital gains and losses on intercompany transactions and transactions with respect to stock, bonds, and other obligations of a member of the group shall be reflected as provided in §§1.1502–13, and 1.1502–19, and capital losses shall be limited as provided in §§1.1502–15A and 1.1502-11(c).

(4) [Reserved]

(5) *Example.* The provisions of this paragraph may be illustrated by the following example:

Example. (i) Corporations P, S, and T file consolidated returns on a calendar year basis for 1966 and 1967. The members had the following transactions involving capital assets during 1967: P sold an asset with a $10,000 basis to S for $17,000 and none of the circumstances of restoration described in § 1.1502–13 occurred by the end of the consolidated return year; S sold an asset to individual A for $7,000 which S had purchased during 1966 from P for $10,000, and with respect to which P had deferred a gain of $2,000; T sold an asset with a basis of $10,000 to individual B for $25,000. The group has a consolidated net capital loss carryover to the taxable year of $10,000.

(ii) The consolidated net capital gain of the group is $4,000, determined as follows: P's net capital gain of $2,000, representing the deferred gain on the sale to S during the taxable year 1966, restored into income during taxable year 1967 (the $7,000 gain on P's deferred intercompany transaction is not taken into account for the current year), plus T's net capital gain of $15,000, minus S's net capital loss of $3,000 and the consolidated net capital loss carryover of $10,000.

(b) *Consolidated net capital loss carryovers and carrybacks*—(1) *In general.* The consolidated net capital loss carryovers and carrybacks to the taxable year shall consist of any consolidated net capital losses of the group, plus any net capital losses of members of the group arising in separate return years of such members, which may be carried to the taxable year under the principles of section 1212(a). However, such consolidated carryovers and carrybacks shall not include any consolidated net capital loss apportioned to a corporation for a separate return year pursuant to § 1.1502–79A(b) (or § 1.1502–22T(b), as appropriate) and shall be subject to the limitations contained in paragraphs (c) and (d) of this section. For purposes of section 1212(a)(1), the portion of any consolidated net capital loss for any taxable year attributable to a foreign expropriation capital loss is the amount of the foreign expropriation capital losses of all the members for such year (but not in excess of the consolidated net capital loss for such year).

(2) *Absorption rules.* For purposes of determining the amount, if any, of a net capital loss (whether consolidated or separate) which can be carried to a taxable year (consolidated or separate), the amount of such net capital loss which is absorbed in a prior consolidated return year under section 1212(a)(1) shall be determined by:

(i) Applying all net capital losses which can be carried to such prior year in the order of the taxable years in which such losses were sustained, beginning with the taxable year which ends earliest, and

(ii) Applying all such losses which can be carried to such prior year from taxable years ending on the same date on a prorata basis, except that any portion of a net capital loss attributable to a foreign expropriation capital loss to which section 1212(a)(1)(B) applies shall be applied last.

(c) *Limitation on net capital loss carryovers and carrybacks from separate return limitation years*—(1) *General rule.* In the case of a net capital loss of a member of the group arising in a separate return limitation year (as defined in paragraph (f) of § 1.1502–1) of such member (and in a separate return limitation year of any predecessor of such member), the amount that may be included under paragraph (b) of this section (computed without regard to the limitation contained in paragraph (d) of this section) shall not exceed the amount determined under subparagraph (2) of this paragraph.

(2) *Computation of limitation.* The amount referred to in subparagraph (1) of this paragraph with respect to a member of the group is the excess, if any, of:

(i) The consolidated capital gain net income (net capital gain for taxable years beginning before January 1, 1977) for the taxable year (computed without regard to any net capital loss carryovers and carrybacks), minus such consolidated capital gain net income (net capital gain for taxable years beginning before January 1, 1977) for the taxable year recomputed by excluding the capital gains and losses and the gains and losses to which section 1231 applies of such member, over

(ii) The net capital losses attributable to such member which can be carried to the taxable year arising in taxable years ending prior to the particular separate return limitation year.

(d) *Limitation on capital loss carryovers where there has been a consolidated return change of ownership*—(1) *General rule.* If a consolidated return change of ownership (as defined in paragraph (g) of § 1.1502–1) occurs during the taxable year or an earlier taxable year, the amount which may be included under paragraph (b) of this section in the consolidated net capital loss carryovers to the taxable year with respect to the aggregate of the net capital losses attributable to old members of the group (as defined in paragraph (g)(3) of § 1.1502–1) arising in taxable years (consolidated or separate) ending on the same day and before the taxable year in which the consolidated return change of ownership occurred shall not exceed the amount determined under subparagraph (2) of this paragraph.

(2) *Computation of limitation.* The amount referred to in subparagraph (1) of this paragraph shall be the excess of:

(i) The consolidated capital gain net income (net capital gain for taxable years beginning before January 1, 1977) (determined without regard to any net capital loss carryovers for the taxable year) recomputed by including only capital gains and losses and gains and losses to which section 1231 applies of the old members of the group, over

(ii) The aggregate net capital losses attributable to the old members of the group which may be carried to the taxable year arising in taxable years ending prior to the particular loss year or years.

(3) *Cross-reference.* See § 1.1502–22T(d) for the rule that applies the principles of this paragraph (d) in consolidated return years beginning on or after January 1, 1997, with respect to a consolidated return change of ownership occurring before January 1, 1997.

(e) *Effective date.* This section applies to any consolidated return years to which § 1.1502–21T(g) does not apply. See § 1.1502–21T(g) for effective dates of that section.

[T.D. 6894, 31 FR 11794, Sept. 8, 1966, as amended by T.D. 7728, 45 FR 72650, Nov. 3, 1980; T.D. 8597, 60 FR 36679, July 18, 1995; T.D. 8677, 33323, June 27, 1996. Redesignated and amended by T.D. 8677, 61 FR 33333, June 27, 1996]

§ 1.1502–23A Consolidated net section 1231 gain or loss generally applicable for consolidated return years beginning before January 1, 1997.

(a) The consolidated section 1231 net gain or loss for the taxable year shall be determined by taking into account the aggregate of the gains and losses to which section 1231 applies of the members of the group for the consolidated return year. Section 1231 gains and losses on intercompany transactions shall be reflected as provided in § 1.1502–13. Section 1231 losses that are ''built-in deductions'' shall be subject to the limitations of §§ 1.1502–21A(c) and 1.1502–22A(c), as provided in § 1.1502–15A(a) (or § 1.1502–21T(c) in effect prior to June 25, 1999, as contained in 26 CFR part 1 revised April 1, 1999, and 1.1502–22T(c) in effect prior to June 25, 1999, as contained in 26 CFR part 1 revised April 1, 1999, as provided in 1.1502–15T(a) in effect prior to June 25, 1999, as contained in 26 CFR part 1 revised April 1, 1999) or (1.1502–21(c) and 1.1502–22(c), as provided in 1.1502–15(a), as applicable), as appropriate).

(b) *Effective date.* This section applies to any consolidated return years to which § 1.1502–21(h) or 1.1502–21T(g) in effect prior to June 25, 1999, as contained in 26 CFR part 1 revised April 1, 1999, as applicable does not apply. See § 1.1502–21(h) or 1.1502–21T(g) in effect prior to June 25, 1999, as contained in 26 CFR part 1 revised April 1, 1999, as applicable for effective dates of these sections.

[T.D. 7246, 38 FR 763, Jan. 4, 1973, as amended by T.D. 8677, 33323, June 27, 1996. Redesignated and amended by T.D. 8677, 61 FR 33334, June 27, 1996; T.D. 8823, 64 FR 36099, July 2, 1999]

§ 1.1502–41A Determination of consolidated net long-term capital gain and consolidated net short-term capital loss generally applicable for consolidated return years beginning before January 1, 1997.

(a) *Consolidated net long-term capital gain.* The consolidated net long-term capital gain shall be determined by taking into account (1) those gains and losses to which § 1.1502–22A(a) applies which are treated as long term under section 1222, and (2) the consolidated section 1231 net gain (computed in accordance with § 1.1502–23A).

(b) *Consolidated net short-term capital loss.* The consolidated net short-term capital loss shall be determined by taking into account (1) those gains and losses to which §1.1502–22A(a) applies which are treated as short term under section 1222, and (2) the consolidated net capital loss carryovers and carrybacks to the taxable year (as determined under §1.1502–22A(b)).

(c) *Effective date.* This section applies to any consolidated return years to which §1.1502–21(h) or 1.1502–21T(g) in effect prior to June 25, 1999, as contained in 26 CFR part 1 revised April 1, 1999, as applicable does not apply. See §1.1502–21(h) or 1.1502–21T(g) in effect prior to June 25, 1999, as contained in 26 CFR part 1 revised April 1, 1999, as applicable for effective dates of these sections.

[T.D, 6894, 31 FR 11794, Sept. 8, 1966, as amended by T.D. 8677, 61 FR 33323, June 27, 1996. Redesignated and amended by T.D. 8677, 61 FR 33334, June 27, 1996; T.D. 8823, 64 FR 36099, 36100, July 2, 1999]

REGULATIONS APPLICABLE TO TAXABLE YEARS BEGINNING BEFORE JUNE 28, 2002

§ 1.1502–77A Common parent agent for subsidiaries applicable for consolidated return years beginning before June 28, 2002.

(a) *Scope of agency of common parent corporation.* The common parent, for all purposes (other than the making of the consent required by paragraph (a)(1) of §1.1502–75, the making of an election under section 936(e), the making of an election to be treated as a DISC under §1.992–2, and a change of the annual accounting period pursuant to paragraph (b)(3)(ii) of §1.991–1) shall be the sole agent for each subsidiary in the group, duly authorized to act in its own name in all matters relating to the tax liability for the consolidated return year. Except as provided in the preceding sentence, no subsidiary shall have authority to act for or to represent itself in any such matter. For example, any election available to a subsidiary corporation in the computation of its separate taxable income must be made by the common parent, as must any change in an election previously made by the subsidiary corporation; all correspondence will be carried on directly with the common parent; the common parent shall file for all extensions of time including extensions of time for payment of tax under section 6164; notices of deficiencies will be mailed only to the common parent, and the mailing to the common parent shall be considered as a mailing to each subsidiary in the group; notice and demand for payment of taxes will be given only to the common parent and such notice and demand will be considered as a notice and demand to each subsidiary; the common parent will file petitions and conduct proceedings before the Tax Court of the United States, and any such petition shall be considered as also having been filed by each such subsidiary. The common parent will file claims for refund or credit, and any refund will be made directly to and in the name of the common parent and will discharge any liability of the Government in respect thereof to any such subsidiary; and the common parent in its name will give waivers, give bonds, and execute closing agreements, offers in compromise, and all other documents, and any waiver or bond so given, or agreement, offer in compromise, or any other document so executed, shall be considered as having also been given or executed by each such subsidiary. Notwithstanding the provisions of this paragraph, any notice of deficiency, in respect of the tax for a consolidated return year, will name each corporation which was a member of the group during any part of such period (but a failure to include the name of any such member will not affect the validity of the notice of deficiency as to the other members); any notice and demand for payment will name each corporation which was a member of the group during any part of such period (but a failure to include the name of any such member will not affect the validity of the notice and demand as to the other members); and any levy, any notice of a lien, or any other proceeding to collect the amount of any assessment, after the assessment has been made, will name the corporation from which such collection is to be made. The provisions of this paragraph shall apply whether or not a consolidated return is made for any subsequent year, and

whether or not one or more subsidiaries have become or have ceased to be members of the group at any time. Notwithstanding the provisions of this paragraph, the Commissioner may, upon notifying the common parent, deal directly with any member of the group in respect of its liability, in which event such member shall have full authority to act for itself.

(b) *Notification of deficiency to corporation which has ceased to be a member of the group.* If a subsidiary has ceased to be a member of the group and if such subsidiary files written notice of such cessation with the Commissioner, then the Commissioner upon request of such subsidiary will furnish it with a copy of any notice of deficiency in respect of the tax for a consolidated return year for which it was a member and a copy of any notice and demand for payment of such deficiency. The filing of such written notification and request by a corporation shall not have the effect of limiting the scope of the agency of the common parent provided for in paragraph (a) of this section and a failure by the Commissioner to comply with such written request shall not have the effect of limiting the tax liability of such corporation provided for in § 1.1502–6.

(c) *Effect of waiver given by common parent.* Unless the Commissioner agrees to the contrary, an agreement entered into by the common parent extending the time within which an assessment may be made or levy or proceeding in court begun in respect of the tax for a consolidated return year shall be applicable:

(1) To each corporation which was a member of the group during any part of such taxable year, and

(2) To each corporation the income of which was included in the consolidated return for such taxable year, notwithstanding that the tax liability of any such corporation is subsequently computed on the basis of a separate return under the provisions of § 1.1502–75.

(d) *Effect of dissolution of common parent corporation.* If the common parent corporation contemplates dissolution, or is about to be dissolved, or if for any other reason its existence is about to terminate, it shall forthwith notify the Commissioner of such fact and designate, subject to the approval of the Commissioner, another member to act as agent in its place to the same extent and subject to the same conditions and limitations as are applicable to the common parent. If the notice thus required is not given by the common parent, or the designation is not approved by the Commissioner, the remaining members may, subject to the approval of the Commissioner, designate another member to act as such agent, and notice of such designation shall be given to the Commissioner. Until a notice in writing designating a new agent has been approved by the Commissioner, any notice of deficiency or other communication mailed to the common parent shall be considered as having been properly mailed to the agent of the group; or, if the Commissioner has reason to believe that the existence of the common parent has terminated, he may, if he deems it advisable, deal directly with any member in respect of its liability.

(e) *General rules*—(1) *Scope.* This section applies if the corporation that is the common parent of the group ceases to be the common parent, whether or not the group remains in existence under § 1.1502–75(d).

(2) *Notice of deficiency.* A notice of deficiency mailed to any one or more corporations referred to in paragraph (a)(4) of this section is deemed for purposes of § 1.1502–77 to be mailed to the agent of the group. If the group has designated an agent that has been approved by the Commissioner under § 1.1502–77(d), a notice of deficiency shall be mailed to that designated agent in addition to any other corporation referred to in paragraph (a)(4) of this section. However, failure by the Commissioner to mail a notice of deficiency to that designated agent shall not invalidate the notice of deficiency mailed to any other corporation referred to in paragraph (a)(4) of this section.

(3) *Waiver of statute of limitations.* A waiver of the statute of limitations with respect to the group given by any one or more corporations referred to in paragraph (a)(4) of this section is deemed to be given by the agent of the group.

(4) *Alternative agents.* The corporations referred to in paragraph (a) (2) and (3) of this section are—

(i) The common parent of the group for all or any part of the year to which the notice or waiver applies,

(ii) A successor to the former common parent in a transaction to which section 381(a) applies,

(iii) The agent designated by the group under § 1.1502–77(d), or

(iv) If the group remains in existence under § 1.1502–75(d) (2) or (3), the common parent of the group at the time the notice is mailed or the waiver given.

(f) *Cross-reference.* For further rules applicable to groups that include insolvent financial institutions, see § 301.6402–7 of this chapter.

(g) *Effective date.* This section applies to taxable years beginning before June 28, 2002, except paragraph (e) of this section applies to statutory notices and waivers of the statute of limitations for taxable years for which the due date (without extensions) of the consolidated return is after September 7, 1988, and which begin before June 28, 2002.

[T.D. 6894, 31 FR 11794, Sept. 8, 1966, as amended by T.D. 7323, 39 FR 34409, Sept. 25, 1974; T.D. 7673, 45 FR 8588, Feb. 8, 1980; T.D. 8226, 53 FR 34733, Sept. 8, 1988; T.D. 8446, 57 FR 53034, Nov. 6, 1992. Redesignated and amended by T.D. 9002, 67 FR 43540, 43544, June 28, 2002]

REGULATIONS APPLICABLE TO TAXABLE YEARS BEFORE JANUARY 1, 1997

§ 1.1502–79A Separate return years generally applicable for consolidated return years beginning before January 1, 1997.

(a) *Carryover and carryback of consolidated net operating losses to separate return years*—(1) *In general.* (i) If a consolidated net operating loss can be carried under the principles of section 172(b) and paragraph (b) of § 1.1502–21A to a separate return year of a corporation (or could have been so carried if such corporation were in existence) which was a member in the year in which such loss arose, then the portion of such consolidated net operating loss attributable to such corporation (as determined under subparagraph (3) of this paragraph) shall be apportioned to such corporation (and any successor to such corporation in a transaction to which section 381(a) applies) and shall be a net operating loss carryover or carryback to such separate return year; accordingly, such portion shall not be included in the consolidated net operating loss carryovers or carrybacks to the equivalent consolidated return year. Thus, for example, if a member filed a separate return for the third year preceding a consolidated return year in which a consolidated net operating loss was sustained and if any portion of such loss is apportioned to such member for such separate return year, such portion may not be carried back by the group to its third year preceding such consolidated return year.

(ii) If a corporation ceases to be a member during a consolidated return year, any consolidated net operating loss carryover from a prior taxable year must first be carried to such consolidated return year, notwithstanding that all or a portion of the consolidated net operating loss giving rise to the carryover is attributable to the corporation which ceases to be a member. To the extent not absorbed in such consolidated return year, the portion of the consolidated net operating loss attributable to the corporation ceasing to be a member shall then be carried to such corporation's first separate return year.

(iii) For rules permitting the reattribution of losses of a subsidiary to the common parent in the case of loss disallowance or basis reduction on the disposition or deconsolidation of stock of the subsidiary, see § 1.1502–20.

(2) *Nonapportionment to certain members not in existence.* Notwithstanding subparagraph (1) of this paragraph, the portion of a consolidated net operating loss attributable to a member shall not be apportioned to a prior separate return year for which such member was not in existence and shall be included in the consolidated net operating loss carrybacks to the equivalent consolidated return year of the group (or, if such equivalent year is a separate return year, then to such separate return year), provided that such member was a member of the group immediately after its organization.

(3) *Portion of consolidated net operating loss attributable to a member.* The portion of a consolidated net operating loss attributable to a member of a group is an amount equal to the consolidated net operating loss multiplied by a fraction, the numerator of which is the separate net operating loss of such corporation, and the denominator of which is the sum of the separate net operating losses of all members of the group in such year having such losses. For purposes of this subparagraph, the separate net operating loss of a member of the group shall be determined under § 1.1502–12 (except that no deduction shall be allowed under section 242), adjusted for the following items taken into account in the computation of the consolidated net operating loss:

(i) The portion of the consolidated dividends received deduction, the consolidated charitable contributions deductions, and the consolidated section 247 deduction, attributable to such member;

(ii) Such member's capital gain net income (net capital gain for taxable years beginning before January 1, 1977) (determined without regard to any net capital loss carryover attributable to such member);

(iii) Such member's net capital loss and section 1231 net loss, reduced by the portion of the consolidated net capital loss attributable to such member (as determined under paragraph (b)(2) of this section); and

(iv) The portion of any consolidated net capital loss carryover attributable to such member which is absorbed in the taxable year.

(4) *Examples.* The provisions of this paragraph may be illustrated by the following examples:

Example (1). (i) Corporation P was formed on January 1, 1966. P filed a separate return for the calendar year 1966. On March 15, 1967, P formed corporation S. P and S filed a consolidated return for 1967. On January 1, 1968, P purchased all the stock of corporation T, which had been formed in 1967 and had filed a separate return for its taxable year ending December 31, 1967.

(ii) P, S, and T join in the filing of a consolidated return for 1968, which return reflects a consolidated net operating loss of $11,000. $2,000 of such consolidated net operating loss is attributable to P, $3,000 to S, and $6,000 to T. Such apportionment of the consolidated net operating loss was made on the basis of the separate net operating losses of each member as determined under subparagraph (3) of this paragraph.

(iii) $5,000 of the 1968 consolidated net operating loss can be carried back to P's separate return for 1966. Such amount is the portion of the consolidated net operating loss attributable to P and S. Even though S was not in existence in 1966, the portion attributable to S can be carried back to P's separate return year, since S (unlike T) was a member of the group immediately after its organization. The 1968 consolidated net operating loss can be carried back against the group's income in 1967 except to the extent (i.e., $6,000) that it is apportioned to T for its 1967 separate return year and to the extent that it was absorbed in P's 1966 separate return year. The portion of the 1968 consolidated net operating loss attributable to T ($6,000) is a net operating loss carryback to its 1967 separate return.

Example (2). (i) Assume the same facts as in example (1). Assume further that on June 15, 1969, P sells all the stock of T to an outsider, that P and S file a consolidated return for 1969 (which includes the income of T for the period January 1 through June 15), and that T files a separate return for the period June 16 through December 31, 1969.

(ii) The 1968 consolidated net operating loss, to the extent not absorbed in prior years, must first be carried to the consolidated return year 1969. Any portion of the $6,000 amount attributable to T which is not absorbed in T's 1967 separate return year or in the 1969 consolidated return year shall then be carried to T's separate return year ending December 31, 1969.

(b) *Carryover and carryback of consolidated net capital loss to separate return years*—(1) *In general.* If a consolidated net capital loss can be carried under the principles of section 1212(a) and paragraph (b) of § 1.1502–22A to a separate return year of a corporation (or could have been so carried if such corporation were in existence) which was a member of the group in the year in which such consolidated net capital loss arose, then the portion of such consolidated net capital loss attributable to such corporation (as determined under subparagraph (2) of this paragraph) shall be apportioned to such corporation (and any successor to such corporation in a transaction to which section 381(a) applies) under the principles of paragraph (a) (1), (2) and (3) of this section and shall be a net capital loss carryback or carryover to such separate return year.

(2) *Portion of consolidated net capital loss attributable to a member.* The portion of a consolidated net capital loss attributable to a member of a group is an amount equal to such consolidated net capital loss multiplied by a fraction, the numerator of which is the net capital loss of such member, and the denominator of which is the sum of the net capital losses of those members of the group having net capital losses. For purposes of this subparagraph, the net capital loss of a member of the group shall be determined by taking into account the following:

(i) Such member's capital gain net income (net capital gain for taxable years beginning before January 1, 1977) or loss (determined without regard to any net capital loss carryover or carryback); and

(ii) Such member's section 1231 net loss, reduced by the portion of the consolidated section 1231 net loss attributable to such member.

(c)–(e) [Reserved]

(f) *Effective date.* Paragraphs (a) and (b) of this section apply to losses arising in consolidated return years to which § 1.1502–21T(g) does not apply. For this purpose net operating loss deductions, carryovers, and carrybacks arise in the year from which they are carried. See § 1.1502–21T(g) for effective dates of that section.

[T.D. 8677, 61 FR 33334, June 27, 1996]

REGULATIONS APPLYING SECTION 382 WITH RESPECT TO TESTING DATES (AND CORPORATIONS JOINING OR LEAVING CONSOLIDATED GROUPS) BEFORE JUNE 25, 1999

§ 1.1502–90A Table of contents.

The following list contains the major headings in §§ 1.1502–91A through 1.1502–99A:

§ 1.1502–91A Application of Section 382 With Respect to a Consolidated Group Generally Applicable for Testing Dates Before June 25, 1999.
(a) Determination and effect of an ownership change.
(1) In general.
(2) Special rule for post-change year that includes the change date.
(3) Cross reference.
(b) Definitions and nomenclature.
(c) Loss group.
(1) Defined.
(2) Coordination with rule that ends separate tracking.
(3) Example.
(d) Loss subgroup.
(1) Net operating loss carryovers.
(2) Net unrealized built-in loss.
(3) Loss subgroup parent.
(4) Principal purpose of avoiding a limitation.
(5) Special rules.
(6) Examples.
(e) Pre-change consolidated attribute.
(1) Defined.
(2) Example.
(f) Pre-change subgroup attribute.
(1) Defined.
(2) Example.
(g) Net unrealized built-in gain and loss.
(1) In general.
(2) Members included.
(i) Consolidated group.
(ii) Loss subgroup.
(3) Acquisitions of built-in gain or loss assets.
(4) Indirect ownership.
(h) Recognized built-in gain or loss.
(1) In general. [Reserved]
(2) Disposition of stock or an intercompany obligation of a member.
(3) Deferred gain or loss.
(4) Exchanged basis property.
(i) [Reserved]
(j) Predecessor and successor corporations.

§ 1.1502–92A Ownership change of a loss group or a loss subgroup generally applicable for testing dates before June 25, 1999.
(a) Scope.
(b) Determination of an ownership change.
(1) Parent change method.
(i) Loss group.
(ii) Loss subgroup.
(2) Examples.
(3) Special adjustments.
(i) Common parent succeeded by a new common parent.
(ii) Newly created loss subgroup parent.
(iii) Examples.
(4) End of separate tracking of certain losses.
(c) Supplemental rules for determining ownership change.
(1) Scope.
(2) Cause for applying supplemental rule.
(3) Operating rules.
(4) Supplemental ownership change rules.
(i) Additional testing dates for the common parent (or loss subgroup parent).
(ii) Treatment of subsidiary stock as stock of the common parent (or loss subgroup parent).
(iii) 5-percent shareholder of the common parent (or loss subgroup parent).
(5) Examples.
(d) Testing period following ownership change under this section.
(e) Information statements.
(1) Common parent of a loss group.

(2) Abbreviated statement with respect to loss subgroups.

§ 1.1502–93A Consolidated section 382 limitation (or subgroup section 382 limitation) generally applicable for testing dates before June 25, 1999.

(a) Determination of the consolidated section 382 limitation (or subgroup section 382 limitation).
(1) In general.
(2) Coordination with apportionment rule.
(b) Value of the loss group (or loss subgroup).
(1) Stock value immediately before ownership change.
(2) Adjustment to value.
(3) Examples.
(c) Recognized built-in gain of a loss group or loss subgroup.
(d) Continuity of business.
(1) In general.
(2) Example.
(e) Limitations of losses under other rules.

§ 1.1502–94A Coordination with section 382 and the regulations thereunder when a corporation becomes a member of a consolidated group generally applicable for corporations becoming members of a group before June 25, 1999.

(a) Scope.
(1) In general.
(2) Successor corporation as new loss member.
(3) Coordination in the case of a loss subgroup.
(4) End of separate tracking of certain losses.
(5) Cross-reference.
(b) Application of section 382 to a new loss member.
(1) In general.
(2) Adjustment to value.
(3) Pre-change separate attribute defined.
(4) Examples.
(c) Built-in gains and losses.
(d) Information statements.

§ 1.1502–95A Rules on ceasing to be a member of a consolidated group (or loss subgroup) generally applicable for corporations ceasing to be members before June 25, 1999.

(a) In general.
(1) Consolidated group.
(2) Election by common parent.
(3) Coordination with §§ 1.1502–91T through 1.1502–93T.
(b) Separate application of section 382 when a member leaves a consolidated group.
(1) In general.
(2) Effect of a prior ownership change of the group.
(3) Application in the case of a loss subgroup.
(4) Examples.
(c) Apportionment of a consolidated section 382 limitation.
(1) In general.
(2) Amount of apportionment.
(3) Effect of apportionment on the consolidated section 382 limitation.
(4) Effect on corporations to which the consolidated section 382 limitation is apportioned.
(5) Deemed apportionment when loss group terminates.
(6) Appropriate adjustments when former member leaves during the year.
(7) Examples.
(d) Rules pertaining to ceasing to be a member of a loss subgroup.
(1) In general.
(2) Examples.
(e) Filing the election to apportion.
(1) Form of the election to apportion.
(2) Signing of the election.
(3) Filing of the election.
(4) Revocation of election.

§ 1.1502–96A Miscellaneous rules generally applicable for testing dates before June 25, 1999.

(a) End of separate tracking of losses.
(1) Application.
(2) Effect of end of separate tracking.
(3) Continuing effect of end of separate tracking.
(4) Special rule for testing period.
(5) Limits on effects of end of separate tracking.
(b) Ownership change of subsidiary.
(1) Ownership change of a subsidiary because of options or plan or arrangement.
(2) Effect of the ownership change.
(i) In general.
(ii) Pre-change losses.
(3) Coordination with §§ 1.1502–91T, 1.1502–92T, and 1.1502–94T.
(4) Example.
(c) Continuing effect of an ownership change.

§ 1.1502–97A Special rules under section 382 for members under the jurisdiction of a court in a title 11 or similar case. [Reserved]

§ 1.1502–98A Coordination with section 383 generally applicable for testing dates (or members joining or leaving a group) before June 25, 1999.

§ 1.1502–99A Effective dates.

(a) Effective date.
(1) In general.
(2) Anti-duplication rules for recognized built-in gain.
(b) Testing period may include a period beginning before January 1, 1997.
(c) Transition rules.
(1) Methods permitted.
(i) In general.
(ii) Adjustments to offset excess limitation.
(iii) Coordination with effective date.
(2) Permitted methods.
(d) Amended returns.
(e) Section 383.

[T.D. 8678, 61 FR 33336, June 27, 1996. Redesignated and amended by T.D. 8824, 64 FR 36127, July 2, 1999]

§ 1.1502–91A Application of section 382 with respect to a consolidated group generally applicable for testing dates before June 25, 1999.

(a) *Determination and effect of an ownership change*—(1) *In general.* This section and §§ 1.1502–92A and 1.1502–93A set forth the rules for determining an ownership change under section 382 for members of consolidated groups and the section 382 limitations with respect to attributes described in paragraphs (e) and (f) of this section. These rules generally provide that an ownership change and the section 382 limitation are determined with respect to these attributes for the group (or loss subgroup) on a single entity basis and not for its members separately. Following an ownership change of a loss group (or a loss subgroup) under § 1.1502–92A, the amount of consolidated taxable income for any post-change year which may be offset by pre-change consolidated attributes (or pre-change subgroup attributes) shall not exceed the consolidated section 382 limitation (or subgroup section 382 limitation) for such year as determined under § 1.1502–93A.

(2) *Special rule for post-change year that includes the change date.* If the post-change year includes the change date, section 382(b)(3)(A) is applied so that the consolidated section 382 limitation (or subgroup section 382 limitation) does not apply to the portion of consolidated taxable income that is allocable to the period in the year on or before the change date. See generally § 1.382–6 (relating to the allocation of income and loss). The allocation of consolidated taxable income for the post-change year that includes the change date must be made before taking into account any consolidated net operating loss deduction (as defined in § 1.1502–21(a) or 1.1502–21T(a) in effect prior to June 25, 1999, as contained in 26 CFR part 1 revised April 1, 1999, as applicable).

(3) *Cross reference.* See §§ 1.1502–94A and 1.1502–95A for rules that apply section 382 to a corporation that becomes or ceases to be a member of a group or loss subgroup.

(b) *Definitions and nomenclature.* For purposes of this section and §§ 1.1502–92A through 1.1502–99A, unless otherwise stated:

(1) The definitions and nomenclature contained in section 382 and the regulations thereunder (including the nomenclature and assumptions relating to the examples in § 1.382–2T(b)) and this section and §§ 1.1502–92A through 1.1502–99A apply; and

(2) In all examples, all groups file consolidated returns, all corporations file their income tax returns on a calendar year basis, the only 5-percent shareholder of a corporation is a public group, the facts set forth the only owner shifts during the testing period, and each asset of a corporation has a value equal to its adjusted basis.

(c) *Loss group*—(1) *Defined.* A loss group is a consolidated group that:

(i) Is entitled to use a net operating loss carryover to the taxable year that did not arise (and is not treated under § 1.1502–21T(c) as arising) in a SRLY;

(ii) Has a consolidated net operating loss for the taxable year in which a testing date of the common parent occurs (determined by treating the common parent as a loss corporation); or

(iii) Has a net unrealized built-in loss (determined under paragraph (g) of this section by treating the date on which the determination is made as though it were a change date).

(2) *Coordination with rule that ends separate tracking.* A consolidated group may be a loss group because a member's losses that arose in (or are treated as arising in) a SRLY are treated as described in paragraph (c)(1)(i) of this section. See § 1.1502–96A(a).

(3) *Example.* The following example illustrates the principles of this paragraph (c).

Example. Loss group. (a) L and L1 file separate returns and each has a net operating loss carryover arising in Year 1 that is carried over to Year 2. A owns 40 shares and L owns 60 shares of the 100 outstanding shares of L1 stock. At the close of Year 1, L buys the 40 shares of L1 stock from A. For Year 2, L and L1 file a consolidated return. The following is a graphic illustration of these facts:

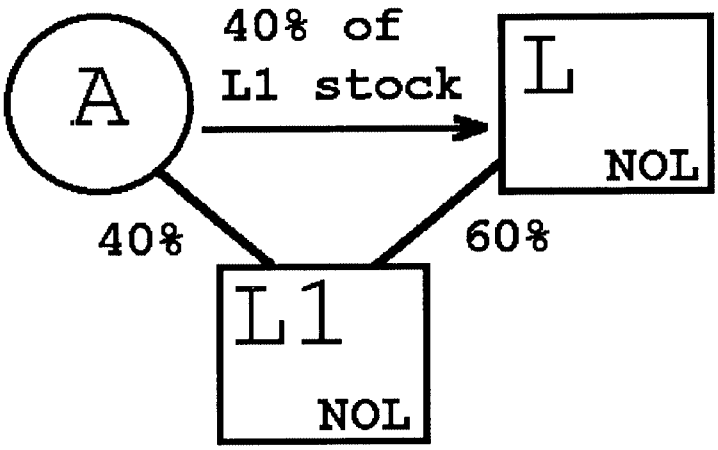

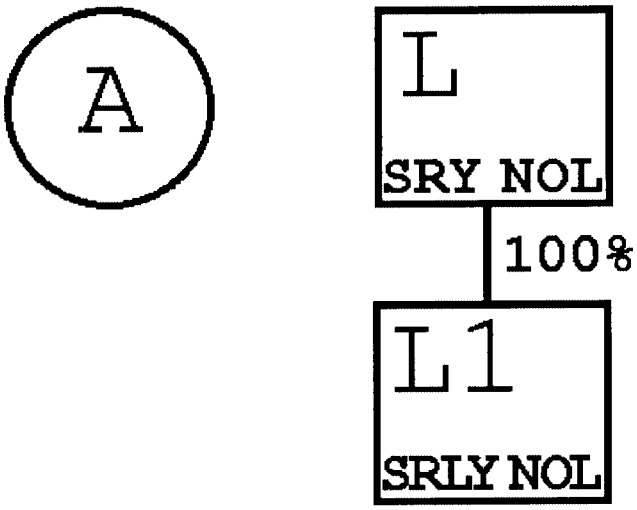

(b) L and L1 become a loss group at the beginning of Year 2 because the group is entitled to use the Year 1 net operating loss carryover of L, the common parent, which did not arise (and is not treated under §1.1502–21(c) or 1.1502–21T(c) in effect prior to June 25, 1999, as contained in 26 CFR part 1 revised April 1, 1999, as applicable as arising) in a SRLY. See §1.1502–94A for rules relating to the application of section 382 with respect to L1's net operating loss carryover from Year 1 which did arise in a SRLY.

(d) *Loss subgroup*—(1) *Net operating loss carryovers.* Two or more corporations that become members of a consolidated group (the current group) compose a loss subgroup if:

(i) They were affiliated with each other in another group (the former group), whether or not the group was a consolidated group;

(ii) They bear the relationship described in section 1504(a)(1) to each other through a loss subgroup parent immediately after they become members of the current group; and

(iii) At least one of the members carries over a net operating loss that did not arise (and is not treated under § 1.1502–21(c) or 1.1502–21T(c) in effect prior to June 25, 1999, as contained in 26 CFR part 1 revised April 1, 1999, as applicable as arising) in a SRLY with respect to the former group.

(2) *Net unrealized built-in loss.* Two or more corporations that become members of a consolidated group compose a loss subgroup if they:

(i) Have been continuously affiliated with each other for the 5 consecutive year period ending immediately before they become members of the group;

(ii) Bear the relationship described in section 1504(a)(1) to each other through a loss subgroup parent immediately after they become members of the current group; and

(iii) Have a net unrealized built-in loss (determined under paragraph (g) of this section on the day they become members of the group by treating that day as though it were a change date).

(3) *Loss subgroup parent.* A loss subgroup parent is the corporation that bears the same relationship to the other members of the loss subgroup as a common parent bears to the members of a group.

(4) *Principal purpose of avoiding a limitation.* The corporations described in paragraph (d)(1) or (2) of this section do not compose a loss subgroup if any one of them is formed, acquired, or availed of with a principal purpose of avoiding the application of, or increasing any limitation under, section 382. Instead, § 1.1502–94A applies with respect to the attributes of each such corporation. This paragraph (d)(4) does not apply solely because, in connection with becoming members of the group, the members of a group (or loss subgroup) are rearranged to bear a relationship to the other members described in section 1504(a)(1).

(5) *Special rules.* See § 1.1502–95A(d) for rules concerning when a corporation ceases to be a member of a loss subgroup. See also § 1.1502–96A(a) for a special rule regarding the end of separate tracking of SRLY losses of a member that has an ownership change or that has been a member of a group for at least 5 consecutive years.

(6) *Examples.* The following examples illustrate the principles of this paragraph (d).

Example 1. Loss subgroup. (a) P owns all the L stock and L owns all the L1 stock. The P group has a consolidated net operating loss arising in Year 1 that is carried to Year 2. On May 2, Year 2, P sells all the stock of L to A, and L and L1 thereafter file consolidated returns. A portion of the Year 1 consolidated net operating loss is apportioned under § 1.1502–21(b) or 1.1502–21T(b) in effect prior to June 25, 1999, as contained in 26 CFR part 1 revised April 1, 1999, as applicable to each of L and L1, which they carry over to Year 2. The following is a graphic illustration of these facts:

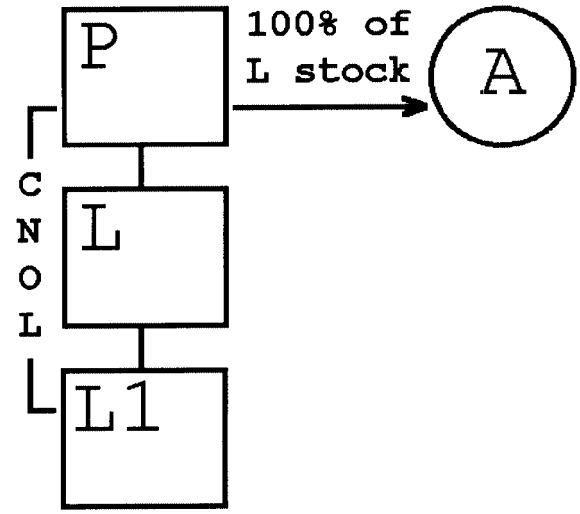

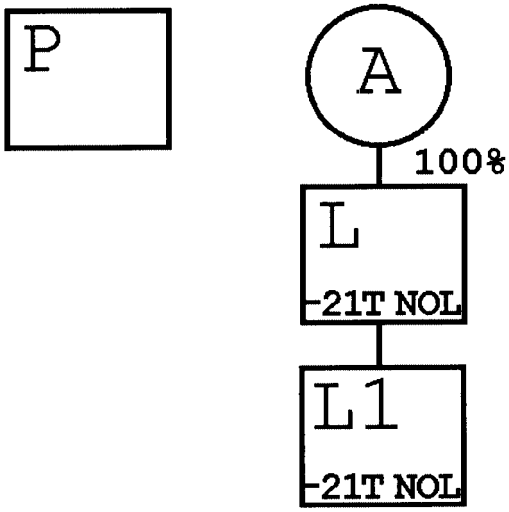

(b) (1) L and L1 compose a loss subgroup within the meaning of paragraph (d)(1) of this section because—

(i) They were affiliated with each other in the P group (the former group);

(ii) They bear a relationship described in section 1504(a)(1) to each other through a loss subgroup parent (L) immediately after they became members of the L group; and

(iii) At least one of the members (here, both L and L1) carries over a net operating loss to the L group (the current group) that did not arise in a SRLY with respect to the P group.

(2) Under paragraph (d)(3) of this section, L is the loss subgroup parent of the L loss subgroup.

Example 2. Loss subgroup—section 1504(a)(1) relationship.

(a) P owns all the stock of L and L1. L owns all the stock of L2. L1 and L2 own 40 percent and 60 percent of the stock of L3, respectively. The P group has a consolidated net operating loss arising in Year 1 that is carried over to Year 2. On May 22, Year 2, P sells all the stock of L and L1 to P1, the common parent of another consolidated group. The Year 1 consolidated net operating loss is apportioned under §1.1502–21(b) or 1.1502–21T(b) in effect prior to June 25, 1999, as contained in 26 CFR part 1 revised April 1, 1999, as applicable, and each of L, L1, L2, and L3 carries over a portion of such loss to the first consolidated return year of the P1 group ending after the acquisition. The following is a graphic illustration of these facts:

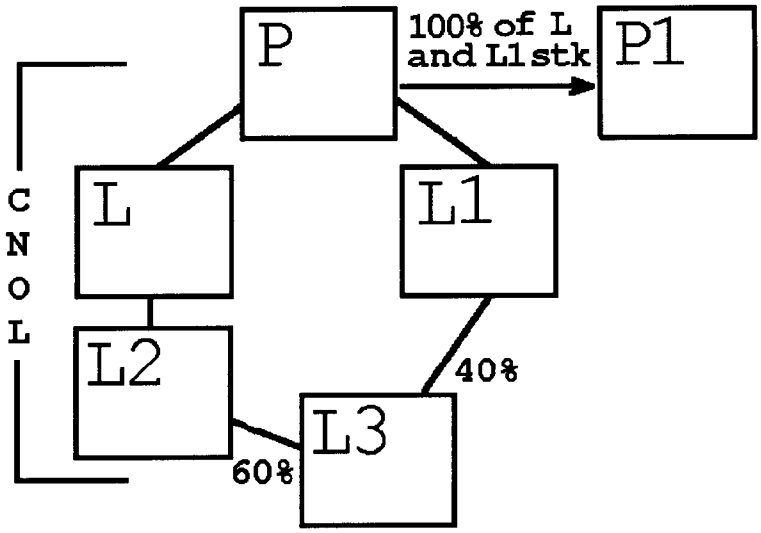

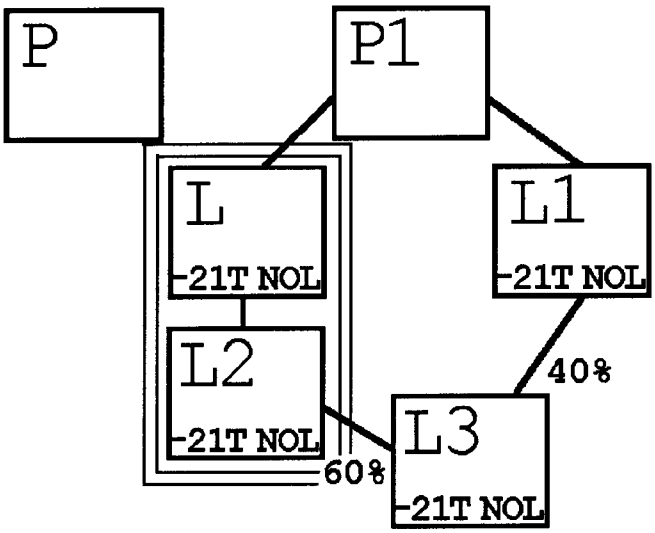

(b) L and L2 compose a loss subgroup within the meaning of paragraph (d)(1) of this section. Neither L1 nor L3 is included in a loss subgroup because neither bears a relationship described in section 1504(a)(1) through a loss subgroup parent to any other member of the former group immediately after becoming members of the P1 group.

Example 3. Loss subgroup—section 1504(a)(1) relationship. The facts are the same as in *Example 2,* except that the stock of L1 is transferred to L in connection with the sale of the

L stock to P1. L, L1, L2, and L3 compose a loss subgroup within the meaning of paragraph (d)(1) of this section because—

(1) They were affiliated with each other in the P group (the former group);

(2) They bear a relationship described in section 1504(a)(1) to each other through a loss subgroup parent (L) immediately after they become members of the P1 group; and

(3) At least one of the members (here, each of L, L1, L2, and L3) carries over to the P1 group (the current group) a net operating loss that did not arise in a SRLY with respect to the P group (the former group).

(e) *Pre-change consolidated attribute*—(1) *Defined.* A pre-change consolidated attribute of a loss group is—

(i) Any loss described in paragraph (c)(1) (i) or (ii) of this section (relating to the definition of loss group) that is allocable to the period ending on or before the change date; and

(ii) Any recognized built-in loss of the loss group.

(2) *Example.* The following example illustrates the principle of this paragraph (e).

Example. Pre-change consolidated attribute. (a) The L group has a consolidated net operating loss arising in Year 1 that is carried over to Year 2. The L loss group has an ownership change at the beginning of Year 2.

(b) The net operating loss carryover of the L loss group from Year 1 is a pre-change consolidated attribute because the L group was entitled to use the loss in Year 2, the loss did not arise in a SRLY with respect to the L group, and therefore the loss was described in paragraph (c)(1)(i) of this section. Under paragraph (a) of this section, the amount of consolidated taxable income of the L group for Year 2 that may be offset by this loss carryover may not exceed the consolidated section 382 limitation of the L group for that year. See § 1.1502–93A for rules relating to the computation of the consolidated section 382 limitation.

(f) *Pre-change subgroup attribute*—(1) *Defined.* A pre-change subgroup attribute of a loss subgroup is—

(i) Any net operating loss carryover described in paragraph (d)(1)(iii) of this section (relating to the definition of loss subgroup); and

(ii) Any recognized built-in loss of the loss subgroup.

(2) *Example.* The following example illustrates the principle of this paragraph (f).

Example. Pre-change subgroup attribute. (a) P is the common parent of a consolidated group. P owns all the stock of L, and L owns all the stock of L1. L2 is not a member of an affiliated group, and has a net operating loss arising in Year 1 that is carried over to Year 2. On December 11, Year 2, L1 acquires all the stock of L2, causing an ownership change of L2. During Year 2, the P group has a consolidated net operating loss that is carried over to Year 3. On November 2, Year 3, M acquires all the L stock from P. M, L, L1, and L2 thereafter file consolidated returns. All of the P group Year 2 consolidated net operating loss is apportioned under § 1.1502–21(b) or 1.1502–21T(b) in effect prior to June 25, 1999, as contained in 26 CFR part 1 revised April 1, 1999, as applicable to L and L2, which they carry over to the M group.

(b)(1) L, L1, and L2 compose a loss subgroup because—

(i) They were affiliated with each other in the P group (the former group);

(ii) They bore a relationship described in section 1504(a)(1) to each other through a loss subgroup parent (L) immediately after they became members of the L group; and

(iii) At least one of the members (here, both L and L2) carries over a net operating loss to the M group (the current group) that is described in paragraph (d)(1)(iii) of this section.

(2) For this purpose, L2's loss from Year 1 that was a SRLY loss with respect to the P group (the former group) is treated as described in paragraph (d)(1)(iii) of this section because of the application of the principles of § 1.1502–96A(a). See paragraph (d)(5) of this section. M's acquisition results in an ownership change of L, and therefore the L loss subgroup under § 1.1502–92A(a)(2). See § 1.1502–93A for rules governing the computation of the subgroup section 382 limitation.

(c) In the M group, L2's Year 1 loss continues to be subject to a section 382 limitation resulting from the ownership change that occurred on December 11, Year 2. See § 1.1502–96A(c).

(g) *Net unrealized built-in gain and loss*—(1) *In general.* The determination whether a consolidated group (or loss subgroup) has a net unrealized built-in gain or loss under section 382(h)(3) is based on the aggregate amount of the separately computed net unrealized built-in gains or losses of each member that is included in the group (or loss subgroup) under paragraph (g)(2) of this section, including items of built-in income and deduction described in section 382(h)(6). Thus, for example, amounts deferred under section 267, or under § 1.1502–13 (other than amounts deferred with respect to the stock of a

member (or an intercompany obligation) included in the group (or loss subgroup) under paragraph (g)(2) of this section) are built-in items. The threshold requirement under section 382(h)(3)(B) applies on an aggregate basis and not on a member-by-member basis. The separately computed amount of a member included in a group or loss subgroup does not include any unrealized built-in gain or loss on stock (including stock described in section 1504(a)(4) and § 1.382–2T(f)(18)(ii) and (iii)) of another member included in the group or loss subgroup (or on an intercompany obligation). However, a member of a group or loss subgroup includes in its separately computed amount the unrealized built-in gain or loss on stock of another member (or on an intercompany obligation) not included in the group or loss subgroup. If a member is not included in a group (or loss subgroup) under paragraph (g)(2) of this section, the determination of whether the member has a net unrealized built-in gain or loss under section 382(h)(3) is made on a separate entity basis. See § 1.1502–94A(c) (relating to built-in gain or loss of a new loss member) and § 1.1502–96A(a) (relating to the end of separate tracking of certain losses).

(2) *Members included*—(i) *Consolidated group.* The members included in the determination whether a consolidated group has a net unrealized built-in gain or loss are all members of the group on the day that the determination is made other than—

(A) A new loss member with a net unrealized built-in loss described in § 1.1502–94A(a)(1)(ii); and

(B) Members included in a loss subgroup described in § 1.1502–91A(d)(2).

(ii) *Loss subgroup.* The members included in the determination whether a loss subgroup has a net unrealized built-in gain or loss are those members described in paragraphs (d)(2)(i) and (ii) of this section.

(3) *Acquisitions of built-in gain or loss assets.* A member of a consolidated group (or loss subgroup) may not, in determining its separately computed net unrealized built-in gain or loss, include any gain or loss with respect to assets acquired with a principal purpose to affect the amount of its net unrealized built-in gain or loss. A group (or loss subgroup) may not, in determining its net unrealized built-in gain or loss, include any gain or loss of a member acquired with a principal purpose to affect the amount of its net unrealized built-in gain or loss.

(4) *Indirect ownership.* A member's separately computed net unrealized built-in gain or loss is adjusted to the extent necessary to prevent any duplication of unrealized gain or loss attributable to the member's indirect ownership interest in another member through a nonmember if the member has a 5-percent or greater ownership interest in the nonmember.

(h) *Recognized built-in gain or loss*—(1) *In general.* [Reserved]

(2) *Disposition of stock or an intercompany obligation of a member.* Gain or loss recognized by a member on the disposition of stock (including stock described in section 1504(a)(4) and § 1.382–2T(f)(18)(ii) and (iii)) of another member or an intercompany obligation disposed of before June 25, 1999 is treated as a recognized built-in gain or loss under section 382(h)(2) (unless disallowed under § 1.1502–20 or otherwise), even though gain or loss on such stock or obligation was not included in the determination of a net unrealized built-in gain or loss under paragraph (g)(1) of this section.

(3) *Deferred gain or loss.* Gain or loss that is deferred under provisions such as section 267 and § 1.1502–13 is treated as recognized built-in gain or loss only to the extent taken into account by the group during the recognition period.

(4) *Exchanged basis property.* If the adjusted basis of any asset is determined, directly or indirectly, in whole or in part, by reference to the adjusted basis of another asset held by the member at the beginning of the recognition period, the asset is treated, with appropriate adjustments, as held by the member at the beginning of the recognition period.

(i) [Reserved]

(j) Predecessor and successor corporations. A reference in this section and §§ 1.1502–92A through 1.1502–99A to a corporation, member, common parent, loss subgroup parent, or subsidiary includes, as the context may require, a

reference to a predecessor or successor corporation. For example, the determination whether a successor satisfies the continuous affiliation requirement of paragraph (d)(2)(i) of this section is made by reference to its predecessor.

[T.D. 8678, 61 FR 33337, June 27, 1996, as amended by T.D. 8823, 64 FR 36100, July 2, 1999. Redesignated and amended by T.D. 8824, 64 FR 36125, 36127, July 2, 1999]

§ 1.1502–92A Ownership change of a loss group or a loss subgroup generally applicable for testing dates before June 25, 1999.

(a) *Scope.* This section provides rules for determining if there is an ownership change for purposes of section 382 with respect to a loss group or a loss subgroup. See § 1.1502–94A for special rules for determining if there is an ownership change with respect to a new loss member and § 1.1502–96A(b) for special rules for determining if there is an ownership change of a subsidiary.

(b) *Determination of an ownership change*—(1) *Parent change method*—(i) *Loss group.* A loss group has an ownership change if the loss group's common parent has an ownership change under section 382 and the regulations thereunder. Solely for purposes of determining whether the common parent has an ownership change—

(A) The losses described in § 1.1502–91A(c) are treated as net operating losses (or a net unrealized built-in loss) of the common parent; and

(B) The common parent determines the earliest day that its testing period can begin by reference to only the attributes that make the group a loss group under § 1.1502–91A(c).

(ii) *Loss subgroup.* A loss subgroup has an ownership change if the loss subgroup parent has an ownership change under section 382 and the regulations thereunder. The principles of § 1.1502–95A(b) (relating to ceasing to be a member of a consolidated group) apply in determining whether the loss subgroup parent has an ownership change. Solely for purposes of determining whether the loss subgroup parent has an ownership change—

(A) The losses described in § 1.1502–91A(d) are treated as net operating losses (or a net unrealized built-in loss) of the loss subgroup parent;

(B) The day that the members of the loss subgroup become members of the group (or a loss subgroup) is treated as a testing date within the meaning of § 1.382–2(a)(4); and

(C) The loss subgroup parent determines the earliest day that its testing period can begin under § 1.382–2T(d)(3) by reference to only the attributes that make the members a loss subgroup under § 1.1502–91A(d).

(2) *Examples.* The following examples illustrate the principles of this paragraph (b).

Example 1. Loss group—ownership change of the common parent. (a) A owns all the L stock. L owns 80 percent and B owns 20 percent of the L1 stock. For Year 1, the L group has a consolidated net operating loss that resulted from the operations of L1 and that is carried over to Year 2. The value of the L stock is $1000. The total value of the L1 stock is $600 and the value of the L1 stock held by B is $120. The L group is a loss group under § 1.1502–91A(c)(1) because it is entitled to use its net operating loss carryover from Year 1. On August 15, Year 2, A sells 51 percent of the L stock to C. The following is a graphic illustration of these facts:

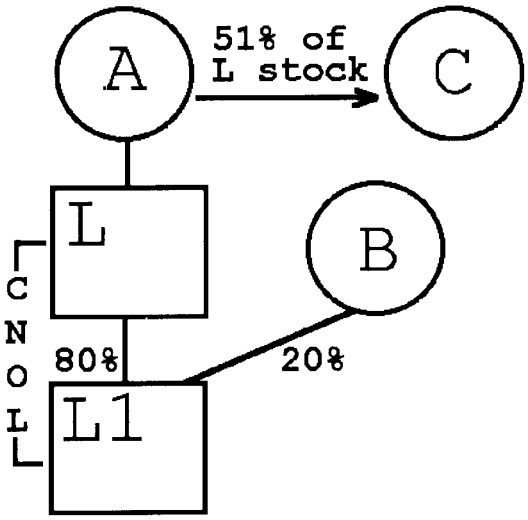

(b) Under paragraph (b)(1)(i) of this section, section 382 and the regulations thereunder are applied to L to determine whether it (and therefore the L loss group) has an ownership change with respect to its net operating loss carryover from Year 1 attributable to L1 on August 15, Year 2. The sale of the L stock to C causes an ownership change of L under §1.382–2T and of the L loss group under paragraph (b)(1)(i) of this section. The amount of consolidated taxable income of the L loss group for any post-change taxable year that may be offset by its pre-change consolidated attributes (that is, the net operating loss carryover from Year 1 attributable to L1) may not exceed the consolidated section 382 limitation for the L loss group for the taxable year.

Example 2. Loss group—owner shifts of subsidiaries disregarded. (a) The facts are the same as in *Example 1,* except that on August 15, Year 2, A sells only 49 percent of the L stock to C and, on December 12, Year 3, in an unrelated transaction, B sells the 20 percent of the L1 stock to D. A's sale of the L stock to C does not cause an ownership change of L under §1.382–2T nor of the L loss group under paragraph (b)(1)(i) of this section. The following is a graphic illustration of these facts:

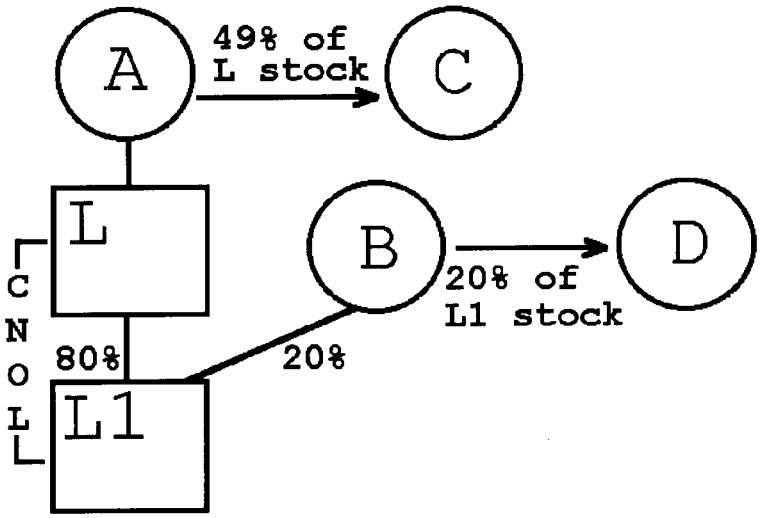

(b) B's subsequent sale of L1 stock is not taken into account for purposes of determining whether the L loss group has an ownership change under paragraph (b)(1)(i) of this section, and, accordingly, there is no ownership change of the L loss group. See paragraph (c) of this section, however, for a supplemental ownership change method that would apply to cause an ownership change if the purchases by C and D were pursuant to a plan or arrangement.

Example 3. Loss subgroup—ownership change of loss subgroup parent controls. (a) P owns all the L stock. L owns 80 percent and A owns 20 percent of the L1 stock. The P group has a consolidated net operating loss arising in Year 1 that is carried over to Year 2. On September 9, Year 2, P sells 51 percent of the L stock to B, and L1 is apportioned a portion of the Year 1 consolidated net operating loss under § 1.1502–21(b) or 1.1502–21T(b) in effect prior to June 25, 1999, as contained in 26 CFR part 1 revised April 1, 1999, as applicable, which it carries over to its next taxable year. L and L1 file a consolidated return for their first taxable year ending after the sale to B. The following is a graphic illustration of these facts:

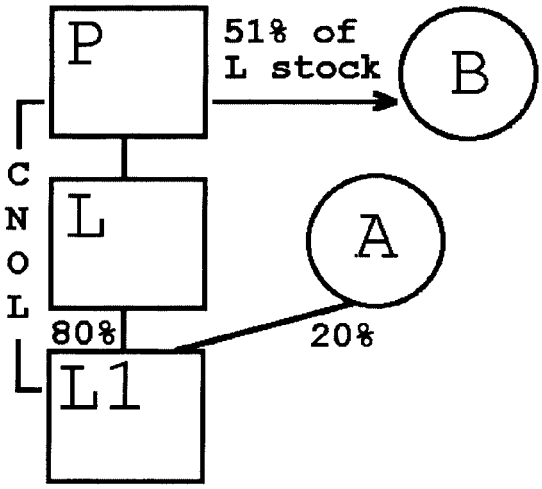

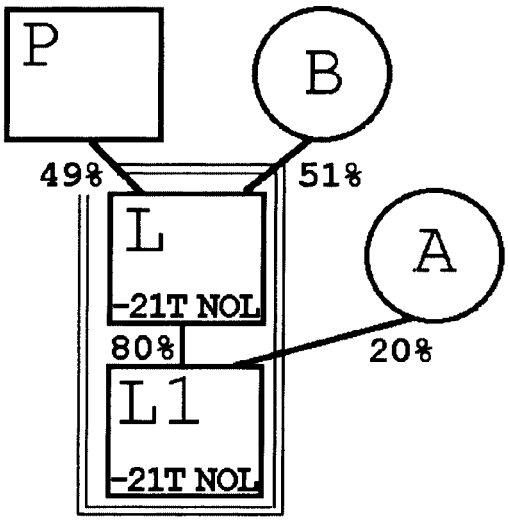

(b) Under §1.1502–91A(d)(1), L and L1 compose a loss subgroup on September 9, Year 2, the day that they become members of the L group. Under paragraph (b)(1)(ii) of this section, section 382 and the regulations thereunder are applied to L to determine whether it (and therefore the L loss subgroup) has an ownership change with respect to the portion of the Year 1 consolidated net operating loss that is apportioned to L1 on September 9, Year 2. L has an ownership change resulting from P's sale of 51 percent of the L stock to A. Therefore, the L loss subgroup has an ownership change with respect to that loss.

Example 4. Loss group and loss subgroup—contemporaneous ownership changes. (a) A owns all the stock of corporation M, M owns 35 percent and B owns 65 percent of the L

stock, and L owns all the L1 stock. The L group has a consolidated net operating loss arising in Year 1 that is carried over to Year 2. On May 19, Year 2, B sells 45 percent of the L stock to M for cash. M, L, and L1 thereafter file consolidated returns. L and L1 are each apportioned a portion of the Year 1 consolidated net operating loss, which they carry over to the M group's Year 2 and Year 3 consolidated return years. The M group has a consolidated net operating loss arising in Year 2 that is carried over to Year 3. On June 9, Year 3, A sells 70 percent of the M stock to C. The following is a graphic illustration of these facts:

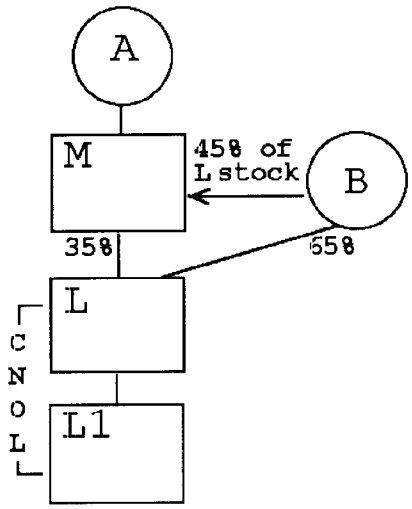

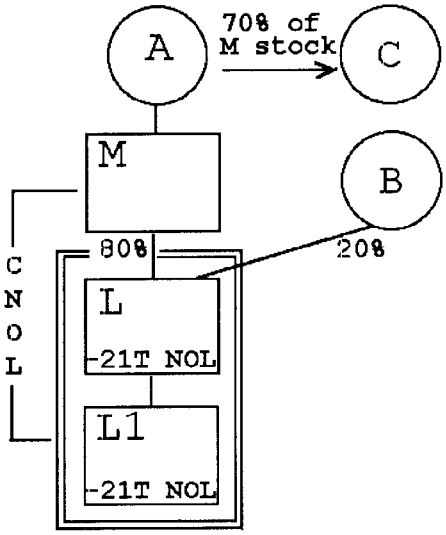

(b) Under § 1.1502–91A(d)(1), L and L1 compose a loss subgroup on May 19, Year 2, the day they become members of the M group. Under paragraph (b)(1)(ii) of this section, section 382 and the regulations thereunder are applied to L to determine whether L (and therefore the L loss subgroup) has an ownership change with respect to the loss carryovers from Year 1 on May 19, Year 2, a testing date because of B's sale of L stock to M. The sale of L stock to M results in only a 45 percentage point increase in A's ownership of L stock. Thus, there is no ownership change of L (or the L loss subgroup) with respect to those loss carryovers under paragraph (b)(1)(ii) of this section on that day.

(c) June 9, Year 3, is also a testing date with respect to the L loss subgroup because of A's sale of M stock to C. The sale results in a 56 percentage point increase in C's ownership of L stock, and L has an ownership change. Therefore, the L loss subgroup has an ownership change on that day with respect to the loss carryovers from Year 1.

(d) Paragraph (b)(1)(i) of this section requires that section 382 and the regulations thereunder be applied to M to determine whether M (and therefore the M loss group) has an ownership change with respect to the net operating loss carryover from Year 2 on June 9, Year 3, a testing date because of A's sale of M stock to C. The sale results in a 70 percentage point increase in C's ownership of M stock, and M has an ownership change. Therefore, the M loss group has an ownership change on that day with respect to that loss carryover.

(3) *Special adjustments*—(i) *Common parent succeeded by a new common parent.* For purposes of determining if a loss group has an ownership change, if the common parent of a loss group is succeeded or acquired by a new common parent and the loss group remains in existence, the new common parent is treated as a continuation of the former common parent with appropriate adjustments to take into account shifts in ownership of the former common parent during the testing period (including shifts that occur incident to the common parent's becoming the former common parent).

(ii) *Newly created loss subgroup parent.* For purposes of determining if a loss subgroup has an ownership change, if the member that is the loss subgroup parent has not been the loss subgroup parent for at least 3 years as of a testing date, appropriate adjustments must be made to take into account owner shifts of members of the loss subgroup so that the structure of the loss subgroup does not have the effect of avoiding an ownership change under section 382. (See paragraph (b)(3)(iii) *Example 3* of this section.)

(iii) *Examples.* The following examples illustrate the principles of this paragraph (b)(3).

Example 1. New common parent acquires old common parent. (a) A, who owns all the L stock, sells 30 percent of the L stock to B on August 26, Year 1. L owns all the L1 stock. The L group has a consolidated net operating loss arising in Year 1 that is carried over to Year 3. On July 16, Year 2, A and B transfer their L stock to a newly created holding company, HC, in exchange for 70 percent and 30 percent, respectively, of the HC stock. HC, L, and L1 thereafter file consolidated returns. Under the principles of § 1.1502–75(d), the L loss group is treated as remaining in existence, with HC taking the place of L as the new common parent of the loss group. The following is a graphic illustration of these facts:

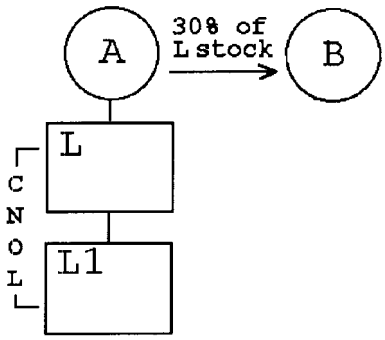

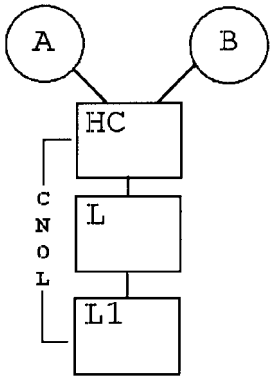

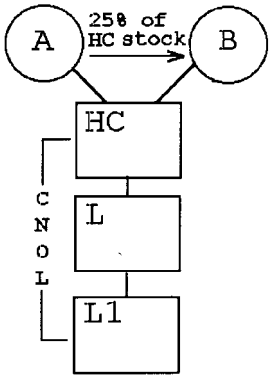

(b) On November 11, Year 3, A sells 25 percent of the HC stock to B. For purposes of determining if the L loss group has an ownership change under paragraph (b)(1)(i) of this section on November 11, Year 3, HC is treated as a continuation of L under paragraph (b)(3)(i) of this section because it acquired L and became the common parent

without terminating the L loss group. Accordingly, HC's testing period commences on January 1, Year 1, the first day of the taxable year of the L loss group in which the consolidated net operating loss that is carried over to Year 3 arose (see §1.382–2T(d)(3)(i)). Immediately after the close of November 11, Year 3, B's percentage ownership interest in the common parent of the loss group (HC) has increased by 55 percentage points over its lowest percentage ownership during the testing period (zero percent). Accordingly, HC and the L loss group have an ownership change on that day.

Example 2. Common parent in case in which common parent ceases to exist. (a) A, B, and C each own one-third of the L stock. L owns all the L1 stock. The L group has a consolidated net operating loss arising in Year 2 that is carried over to Year 3. On November 22, Year 3, L is merged into P, a corporation owned by D, and L1 thereafter files consolidated returns with P. A, B, and C, as a result of owning stock of L, own 90 percent of P's stock after the merger. D owns the remaining 10 percent of P's stock. The merger of L into P qualifies as a reverse acquisition of the L group under §1.1502–75(d)(3)(i), and the L loss group is treated as remaining in existence, with P taking the place of L as the new common parent of the L group. The following is a graphic illustration of these facts:

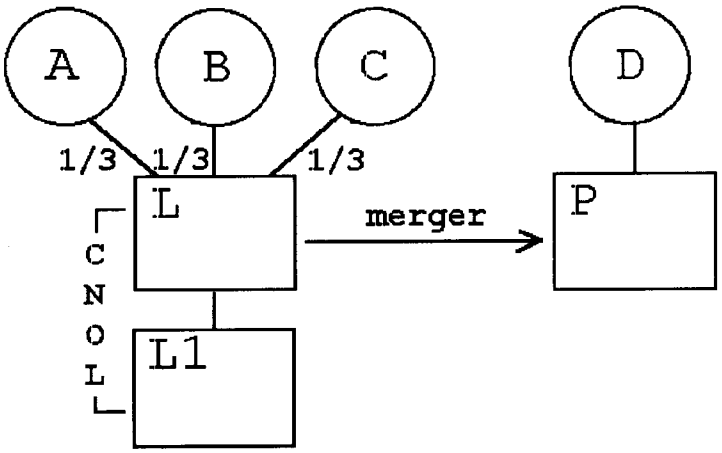

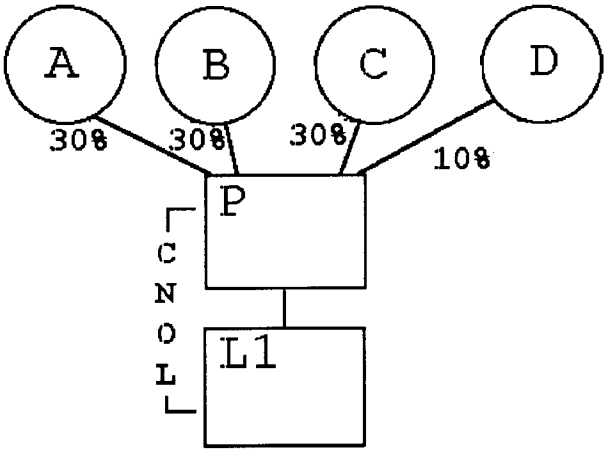

(b) For purposes of determining if the L loss group has an ownership change on November 22, Year 3, the day of the merger, P is treated as a continuation of L so that the testing period for P begins on January 1, Year 2, the first day of the taxable year of the L loss group in which the consolidated net operating loss that is carried over to Year 3 arose. Immediately after the close of November 22, Year 3, D is the only 5-percent shareholder that has increased his ownership interest in P during the testing period (from zero to 10 percentage points).

(c) The facts are the same as in paragraph (a) of this *Example 2,* except that A has held 23⅓ shares (23⅓ percent) of L's stock for five years, and A purchased an additional 10 shares of L stock from E two years before the merger. Immediately after the close of the day of the merger (a testing date), A's ownership interest in P, the common parent of the L loss group, has increased by 6⅔ percentage points over her lowest percentage

ownership during the testing period (23⅓ percent to 30 percent).

(d) The facts are the same as in (a) of this *Example 2,* except that P has a net operating loss arising in Year 1 that is carried to the first consolidated return year ending after the day of the merger. Solely for purposes of determining whether the L loss group has an ownership change under paragraph (b)(1)(i) of this section, the testing period for P commences on January 1, Year 2. P does not determine the earliest day for its testing period by reference to its net operating loss carryover from Year 1, which §§ 1502–1(f)(3) and 1.1502–75(d)(3)(i) treat as arising in a SRLY. See § 1.1502–94A to determine the application of section 382 with respect to P's net operating loss carryover.

Example 3. Newly acquired loss subgroup parent. (a) P owns all the L stock and L owns all the L1 stock. The P group has a consolidated net operating loss arising in Year 1 that is carried over to Year 3. On January 19, Year 2, L issues a 20 percent stock interest to B. On February 5, Year 3, P contributes its L stock to a newly formed subsidiary, HC, in exchange for all the HC stock, and distributes the HC stock to its sole shareholder A. HC, L, and L1 thereafter file consolidated returns. A portion of the P group's Year 1 consolidated net operating loss is apportioned to L and L1 under § 1.1502–21T(b) and is carried over to the HC group's year ending after February 5, Year 3. HC, L, and L1 compose a loss subgroup within the meaning of § 1.1502–91A(d) with respect to the net operating loss carryovers from Year 1. The following is a graphic illustration of these facts:

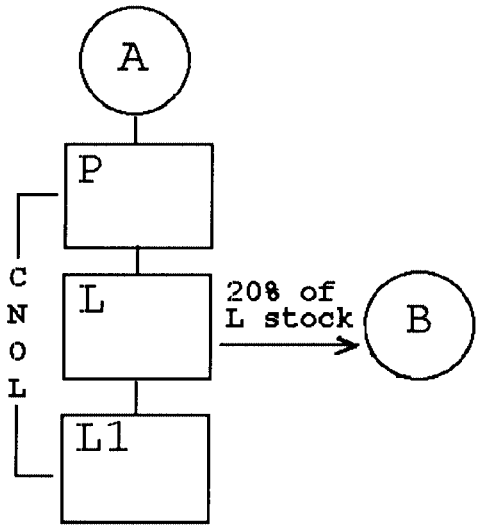

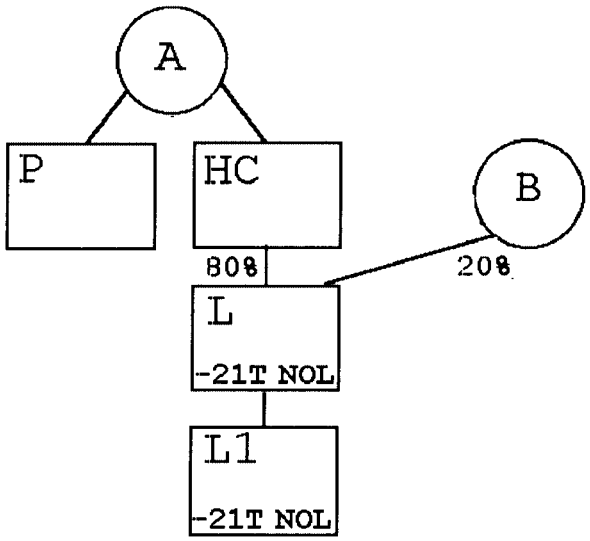

(b) February 5, Year 3, is a testing date for HC as the loss subgroup parent with respect to the net operating loss carryovers of L and L1 from Year 1. See paragraph (b)(1)(ii)(B) of this section. For purposes of determining whether HC has an ownership change on the testing date, appropriate adjustments must be made with respect to the changes in the percentage ownership of the stock of HC because HC was not the loss subgroup parent for at least 3 years prior to the day on which it became a member of the HC loss subgroup (a testing date). The appropriate adjustments include adjustments so that HC succeeds to the owner shifts of other members of the former group. Thus, HC succeeds to the owner shift of L that resulted from the sale of the 20 percent interest to B in determining whether the HC loss subgroup has an ownership change on February 5, Year 3, and

on any subsequent testing date that includes January 19, Year 2.

(4) *End of separate tracking of certain losses.* If § 1.1502–96A(a) (relating to the end of separate tracking of attributes) applies to a loss subgroup, then, while one or more members that were included in the loss subgroup remain members of the consolidated group, there is an ownership change with respect to their attributes described in § 1.1502–96A(a)(2) only if the consolidated group is a loss group and has an ownership change under paragraph (b)(1)(i) of this section (or such a member has an ownership change under § 1.1502–96A(b) (relating to ownership changes of subsidiaries)). If, however, the loss subgroup has had an ownership change before § 1.1502–96A(a) applies, see § 1.1502–96A(c) for the continuing application of the subgroup's section 382 limitation with respect to its pre-change subgroup attributes.

(c) *Supplemental rules for determining ownership change*—(1) *Scope.* This paragraph (c) contains a supplemental rule for determining whether there is an ownership change of a loss group (or loss subgroup). It applies in addition to, and not instead of, the rules of paragraph (b) of this section. Thus, for example, if the common parent of the loss group has an ownership change under paragraph (b) of this section, the loss group has an ownership change even if, by applying this paragraph (c), the common parent would not have an ownership change.

(2) *Cause for applying supplemental rule.* This paragraph (c) applies to a loss group (or loss subgroup) if—

(i) Any 5-percent shareholder of the common parent (or loss subgroup parent) increases its percentage ownership interest in the stock of both—

(A) A subsidiary of the loss group (or loss subgroup) other than by a direct or indirect acquisition of stock of the common parent (or loss subgroup parent); and

(B) The common parent (or loss subgroup parent); and

(ii) Those increases occur within a 3 year period ending on any day of a consolidated return year or, if shorter, the period beginning on the first day following the most recent ownership change of the loss group (or loss subgroup).

(3) *Operating rules.* Solely for purposes of this paragraph (c)—

(i) A 5-percent shareholder of the common parent (or loss subgroup parent) is treated as increasing its percentage ownership interest in the common parent (or loss subgroup parent) or a subsidiary to the extent, if any, that any person acting pursuant to a plan or arrangement with the 5-percent shareholder increases its percentage ownership interest in the stock of that entity;

(ii) The rules in section 382(l)(3) and §§ 1.382–2T(h) and 1.382–4(d) (relating to constructive ownership) apply with respect to the stock of the subsidiary by treating such stock as stock of a loss corporation; and

(iii) In the case of a loss subgroup, a subsidiary includes any member of the loss subgroup other than the loss subgroup parent. (The loss subgroup parent is, however, a subsidiary of the loss group of which it is a member.)

(4) *Supplemental ownership change rules.* The determination whether the common parent (or loss subgroup parent) has an ownership change is made by applying paragraph (b)(1) of this section as modified by the following additional rules—

(i) *Additional testing dates for the common parent (or loss subgroup parent).* A testing date for the common parent (or loss subgroup parent) also includes—

(A) Each day on which there is an increase in the percentage ownership of stock of a subsidiary as described in paragraph (c)(2) of this section; and

(B) The first day of the first consolidated return year for which the group is a loss group (or the members compose a loss subgroup);

(ii) *Treatment of subsidiary stock as stock of the common parent (or loss subgroup parent).* The common parent (or loss subgroup parent) is treated as though it had issued to the person acquiring (or deemed to acquire) the subsidiary stock an amount of its own stock (by value) that equals the value of the subsidiary stock represented by the percentage increase in that person's ownership of the subsidiary (determined on a separate entity basis). A similar principle applies if the increase

in percentage ownership interest is effected by a redemption or similar transaction; and

(iii) *5-percent shareholder of the common parent (or loss subgroup parent).* Any person described in paragraph (c)(3)(i) of this section who is acting pursuant to the plan or arrangement is treated as a 5-percent shareholder of the common parent (or loss subgroup parent).

(5) *Examples.* The following examples illustrate the principles of this paragraph (c).

Example 1. Stock of the common parent under supplemental rules. (a) A owns all the L stock. L is not a member of an affiliated group and has a net operating loss carryover arising in Year 1 that is carried over to Year 6. On September 20, Year 6, L transfers all of its assets and liabilities to a newly created subsidiary, S, in exchange for S stock. L and S thereafter file consolidated returns. On November 23, Year 6, B contributes cash to L in exchange for a 45 percent ownership interest in L and contributes cash to S for a 20 percent ownership interest in S.

(b) B is a 5-percent shareholder of L who increases his percentage ownership interest in L and S during the 3 year period ending on November 23, Year 6. Under paragraph (c)(4)(ii) of this section, the determination whether L (the common parent of a loss group) has an ownership change on November 23, Year 6 (or on any testing date in the testing period which includes November 23, Year 6), is made by applying paragraph (b)(1)(i) of this section and by treating the value of B's 20 percent ownership interest in S as if it were L stock issued to B.

Example 2. Plan or arrangement—public offering of subsidiary stock. (a) A owns all the stock of L and L owns all the stock of L1. The L group has a consolidated net operating loss arising in Year 1 that resulted from the operations of L1 and that is carried over to Year 2. As part of a plan, A sells 49 percent of the L stock to B on October 7, Year 2, and L1 issues new stock representing a 20 percent ownership interest in L1 to the public on November 6, Year 2. The following is a graphic illustration of these facts:

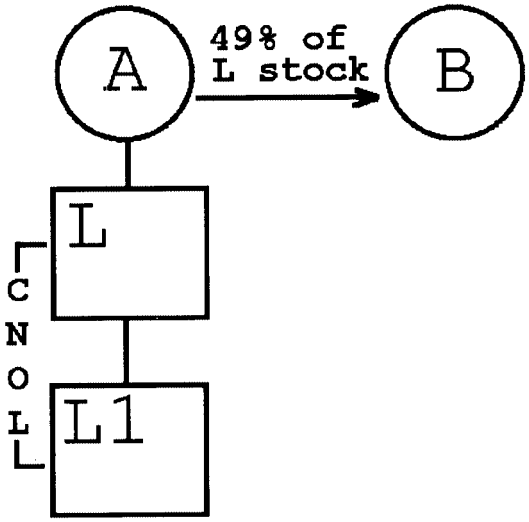

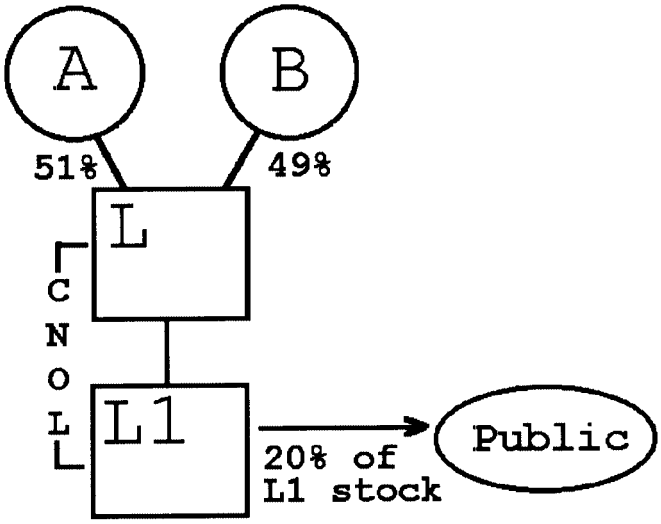

(b) A's sale of the L stock to B does not cause an ownership change of the L loss group on October 7, Year 2, under the rules of § 1.382–2T and paragraph (b)(1)(i) of this section.

(c) Because the issuance of L1 stock to the public occurs in connection with B's acquisition of L stock pursuant to a plan, paragraph (c)(4) of this section applies to determine whether the L loss group has an ownership change on November 6, Year 2 (or on any testing date for which the testing period includes November 6, Year 2).

(d) *Testing period following ownership change under this section.* If a loss group (or a loss subgroup) has had an ownership change under this section, the

testing period for determining a subsequent ownership change with respect to pre-change consolidated attributes (or pre-change subgroup attributes) begins no earlier than the first day following the loss group's (or loss subgroup's) most recent change date.

(e) *Information statements.*—(1) *Common parent of a loss group.* The common parent of a loss group must file the information statement required by §1.382–2T(a)(2)(ii) for a consolidated return year because of any owner shift, equity structure shift, or the issuance or transfer of an option—

(i) With respect to the common parent and with respect to any subsidiary stock subject to paragraph (c) of this section; and

(ii) With respect to an ownership change described in §1.1502–96A(b) (relating to ownership changes of subsidiaries).

(2) *Abbreviated statement with respect to loss subgroups.* The common parent of a consolidated group that has a loss subgroup during a consolidated return year must file the information statement required by §1.382–2T(a)(2)(ii) because of any owner shift, equity structure shift, or issuance or transfer of an option with respect to the loss subgroup parent and with respect to any subsidiary stock subject to paragraph (c) of this section. Instead of filing a separate statement for each loss subgroup parent, the common parent (which is treated as a loss corporation) may file the single statement described in paragraph (e)(1) of this section. In addition to the information concerning stock ownership of the common parent, the single statement must identify each loss subgroup parent and state which loss subgroups, if any, have had ownership changes during the consolidated return year. The loss subgroup parent is, however, still required to maintain the records necessary to determine if the loss subgroup has an ownership change. This paragraph (e)(2) applies with respect to the attributes of a loss subgroup until, under §1.1502–96A(a), the attributes are no longer treated as described in §1.1502–91A(d) (relating to the definition of loss subgroup). After that time, the information statement described in paragraph (e)(1) of this section must be filed with respect to those attributes.

[T.D. 8678, 61 FR 33341, June 27, 1996, as amended by T.D. 8823, 64 FR 36100, July 2, 1999. Redesignated and amended by T.D. 8824, 64 FR 36125, 36127, July 2, 1999]

§ 1.1502–93A Consolidated section 382 limitation (or subgroup section 382 limitation) generally applicable for testing dates before June 25, 1999.

(a) *Determination of the consolidated section 382 limitation (or subgroup section 382 limitation)*—(1) *In general.* Following an ownership change, the consolidated section 382 limitation (or subgroup section 382 limitation) for any post-change year is an amount equal to the value of the loss group (or loss subgroup), as defined in paragraph (b) of this section, multiplied by the long-term tax-exempt rate that applies with respect to the ownership change, and adjusted as required by section 382 and the regulations thereunder. See, for example, section 382(b)(2) (relating to the carryforward of unused section 382 limitation), section 382(b)(3)(B) (relating to the section 382 limitation for the post-change year that includes the change date), section 382(m)(2) (relating to short taxable years), and section 382(h) (relating to recognized built-in gains and section 338 gains).

(2) *Coordination with apportionment rule.* For special rules relating to apportionment of a consolidated section 382 limitation (or a subgroup section 382 limitation) when one or more corporations cease to be members of a loss group (or a loss subgroup) and to aggregation of amounts so apportioned, see §1.1502–95A(c).

(b) *Value of the loss group (or loss subgroup)*—(1) *Stock value immediately before ownership change.* Subject to any adjustment under paragraph (b)(2) of this section, the value of the loss group (or loss subgroup) is the value, immediately before the ownership change, of the stock of each member, other than stock that is owned directly or indirectly by another member. For this purpose—

(i) Ownership is determined under §1.382–2T;

(ii) A member is considered to indirectly own stock of another member

through a nonmember only if the member has a 5-percent or greater ownership interest in the nonmember; and

(iii) Stock includes stock described in section 1504(a)(4) and § 1.382–2T(f)(18)(ii) and (iii).

(2) *Adjustment to value.* The value of the loss group (or loss subgroup), as determined under paragraph (b)(1) of this section, is adjusted under any rule in section 382 or the regulations thereunder requiring an adjustment to such value for purposes of computing the amount of the section 382 limitation. See, for example, section 382(e)(2) (redemptions and corporate contractions), section 382(l)(1) (certain capital contributions) and section 382(l)(4) (ownership of substantial nonbusiness assets). The value of the loss group (or loss subgroup) determined under this paragraph (b) is also adjusted to the extent necessary to prevent any duplication of the value of the stock of a member. For example, the principles of § 1.382–8 (relating to controlled groups of corporations) apply in determining the value of a loss group (or loss subgroup) if, under § 1.1502–91A(g)(2), members are not included in the determination whether the group (or loss subgroup) has a net unrealized built-in loss.

(3) *Examples.* The following examples illustrate the principles of this paragraph (b).

Example 1. Basic case. (a) L, L1, and L2 compose a loss group. L has outstanding common stock, the value of which is $100. L1 has outstanding common stock and preferred stock that is described in section 1504(a)(4). L owns 90 percent of the L1 common stock, and A owns the remaining 10 percent of the L1 common stock plus all the preferred stock. The value of the L1 common stock is $40, and the value of the L1 preferred stock is $30. L2 has outstanding common stock, 50 percent of which is owned by L and 50 percent by L1. The L group has an ownership change. The following is a graphic illustration of these facts:

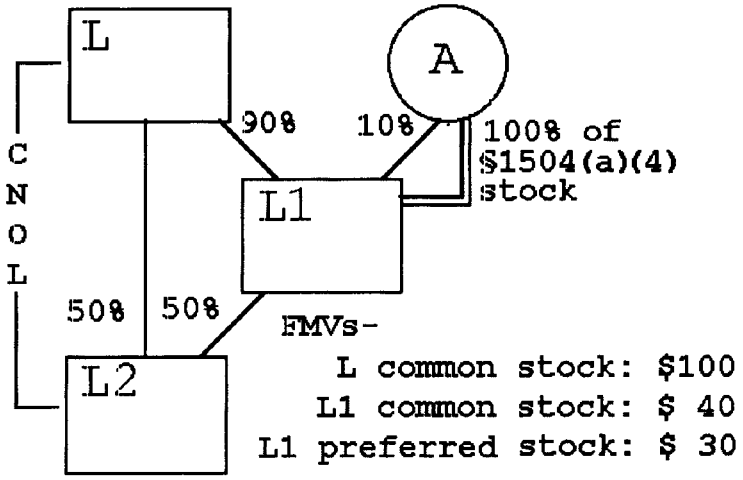

(b) Under paragraph (b)(1) of this section, the L group does not include the value of the stock of any member that is owned directly or indirectly by another member in computing its consolidated section 382 limitation. Accordingly, the value of the stock of the loss group is $134, the sum of the value of—

(1) The common stock of L ($100);

(2) the 10 percent of the L1 common stock ($4) owned by A; and

(3) The L1 preferred stock ($30) owned by A.

Example 2. Indirect ownership. (a) L and L1 compose a consolidated group. L's stock has a value of $100. L owns 80 shares (worth $80) and corporation M owns 20 shares (worth $20) of the L1 stock. L also owns 79 percent of the stock of corporation M. The L group has an ownership change. The following is a graphic illustration of these facts:

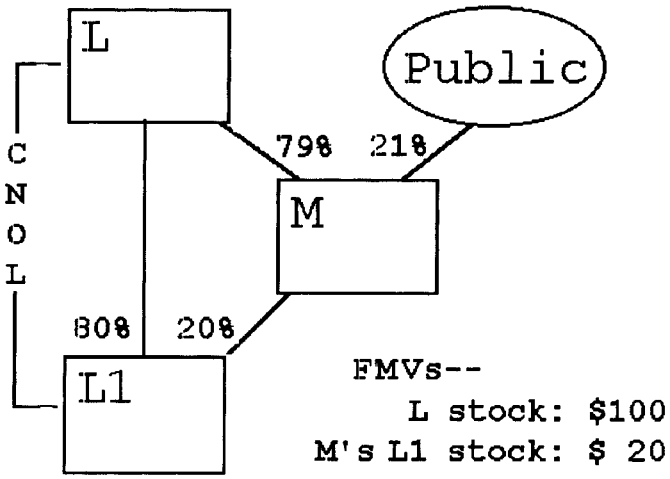

(b) Under paragraph (b)(1) of this section, because of L's more than 5 percent ownership interest in M, a nonmember, L is considered to indirectly own 15.8 shares of the L1 stock held by M (79% × 20 shares). The value of the L loss group is $104.20, the sum of the values of—

(1) The L stock ($100); and

(2) The L1 stock not owned directly or indirectly by L (21% × $20, or $4.20).

(c) *Recognized built-in gain of a loss group or loss subgroup.* If a loss group (or loss subgroup) has a net unrealized built-in gain, any recognized built-in gain of the loss group (or loss subgroup) is taken into account under section 382(h) in determining the consolidated section 382 limitation (or subgroup section 382 limitation). See § 1.1502–99A(a)(2) for a special rule relating to the application of § 1.502–93(c)(2) to consolidated return years for which the due date of the return is after June 25, 1999.

(d) *Continuity of business*—(1) *In general.* A loss group (or a loss subgroup) is treated as a single entity for purposes of determining whether it satisfies the continuity of business enterprise requirement of section 382(c)(1).

(2) *Example.* The following example illustrates the principle of this paragraph (d).

Example. Continuity of business enterprise. L owns all the stock of two subsidiaries, L1 and L2. The L group has an ownership change. It has pre-change consolidated attributes attributable to L2. Each of the members has historically conducted a separate line of business. Each line of business is approximately equal in value. One year after the ownership change, L discontinues its separate business and the business of L2. The separate business of L1 is continued for the remainder of the 2 year period following the ownership change. The continuity of business enterprise requirement of section 382(c)(1) is met even though the separate businesses of L and L2 are discontinued.

(e) *Limitations of losses under other rules.* If a section 382 limitation for a post-change year exceeds the consolidated taxable income that may be offset by pre-change attributes for any reason, including the application of the limitation of § 1.1502–21(c) or 1.1502–21T(c) in effect prior to June 25, 1999, as contained in 26 CFR part 1 revised April 1, 1999, as applicable, the amount of the excess is carried forward under section 382(b)(2) (relating to the carryforward of unused section 382 limitation).

[T.D. 8678, 61 FR 33351, June 27, 1996, as amended by T.D. 8823, 64 FR 36100, July 2, 1999. Redesignated and amended by T.D. 8824, 64 FR 36125, 36128, July 2, 1999]

§ 1.1502–94A Coordination with section 382 and the regulations thereunder when a corporation becomes a member of a consolidated group) generally applicable for corporations becoming members of a group before June 25, 1999.

(a) *Scope*—(1) *In general.* This section applies section 382 and the regulations thereunder to a corporation that is a new loss member of a consolidated group. A corporation is a new loss member if it—

(i) Carries over a net operating loss that arose (or is treated under § 1.1502–21(c) or 1.1502–21T(c) in effect prior to June 25, 1999, as contained in 26 CFR part 1 revised April 1, 1999, as applicable, as arising) in a SRLY with respect to the current group, and that is not described in § 1.1502–91A(d)(1); or

(ii) Has a net unrealized built-in loss (determined under paragraph (c) of this section on the day it becomes a member of the current group by treating that day as a change date) that is not taken into account under § 1.1502–91A(d)(2) in determining whether two or more corporations compose a loss subgroup.

(2) *Successor corporation as new loss member.* A new loss member also includes any successor to a corporation that has a net operating loss carryover arising in a SRLY and that is treated as remaining in existence under § 1.382–2(a)(1)(ii) following a transaction described in section 381(a).

(3) *Coordination in the case of a loss subgroup.* For rules regarding the determination of whether there is an ownership change of a loss subgroup with respect to a net operating loss or a net unrealized built-in loss described in § 1.1502–91A(d) (relating to the definition of loss subgroup) and the computation of a subgroup section 382 limitation following such an ownership change, see §§ 1.1502–92A and 1.1502–93A.

(4) *End of separate tracking of certain losses.* If § 1.1502–96A(a) (relating to the end of separate tracking of attributes) applies to a new loss member, then, while that member remains a member of the consolidated group, there is an ownership change with respect to its attributes described in § 1.1502–96A(a)(2) only if the consolidated group is a loss group and has an ownership change under § 1.1502–92A(b)(1)(i) (or that member has an ownership change under § 1.1502–96A(b) (relating to ownership changes of subsidiaries)). If, however, the new loss member has had an ownership change before § 1.1502–96A(a) applies, see § 1.1502–96A(c) for the continuing application of the section 382 limitation with respect to the member's pre-change losses.

(5) *Cross-reference.* See section 382(a) and § 1.1502–96A(c) for the continuing effect of an ownership change after a corporation becomes or ceases to be a member.

(b) *Application of section 382 to a new loss member*—(1) *In general.* Section 382 and the regulations thereunder apply to a new loss member to determine, on a separate entity basis, whether and to what extent a section 382 limitation applies to limit the amount of consolidated taxable income that may be offset by the new loss member's pre-change separate attributes. For example, if an ownership change with respect to the new loss member occurs under section 382 and the regulations thereunder, the amount of consolidated taxable income for any post-change year that may be offset by the new loss member's pre-change separate attributes shall not exceed the section 382 limitation as determined separately under section 382(b) with respect to that member for such year. If the post-change year includes the change date, section 382(b)(3)(A) is applied so that the section 382 limitation of the new loss member does not apply to the portion of the taxable income for such year that is allocable to the period in such year on or before the change date. See generally § 1.382–6 (relating to the allocation of income and loss).

(2) *Adjustment to value.* The value of the new loss member is adjusted to the extent necessary to prevent any duplication of the value of the stock of a member. For example, the principles of § 1.382–8T (relating to controlled groups of corporations) apply in determining the value of a new loss member.

(3) *Pre-change separate attribute defined.* A pre-change separate attribute of a new loss member is—

(i) Any net operating loss carryover of the new loss member described in paragraph (a)(1) of this section; and

(ii) Any recognized built-in loss of the new loss member.

(4) *Examples.* The following examples illustrate the principles of this paragraph (b).

Example 1. Basic case. (a) A and P each own 50 percent of the L stock. On December 19, Year 6, P purchases 30 percent of the L stock from A for cash. L has net operating losses arising in Year 1 and Year 2 that it carries over to Year 6 and Year 7. The following is a graphic illustration of these facts:

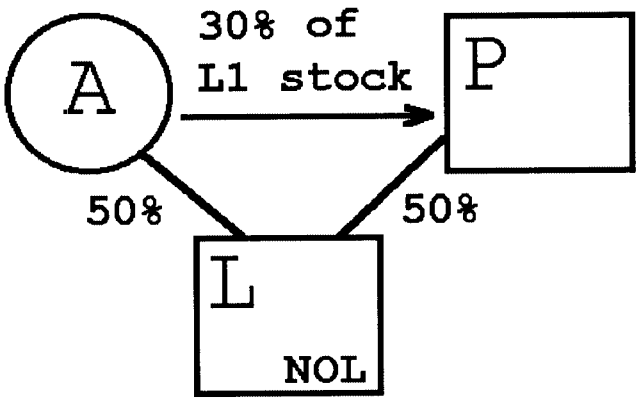

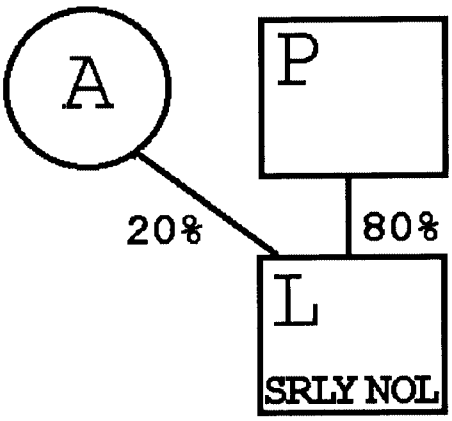

(b) L is a new loss member because it has net operating loss carryovers that arose in a SRLY with respect to the P group and L is not a member of a loss subgroup under § 1.1502–91A(d). Under section 382 and the regulations thereunder, L is a loss corporation on December 19, Year 6, that day is a testing date for L, and the testing period for L commences on December 20, Year 3.

(c) P's purchase of L stock does not cause an ownership change of L on December 19, Year 6, with respect to the net operating loss carryovers from Year 1 and Year 2 under section 382 and §1.382–2T. The use of the loss carryovers, however, is subject to limitation under §1.1502–21(c) or 1.1502–21T(c) in effect prior to June 25, 1999, as contained in 26 CFR part 1 revised April 1, 1999, as applicable.

Example 2. Multiple new loss members. (a) The facts are the same as in *Example 1*, and, on December 31, Year 6, L purchases all the stock of L1 from B for cash. L1 has a net operating loss of $40 arising in Year 3 that it carries over to Year 7. The following is a graphic illustration of these facts:

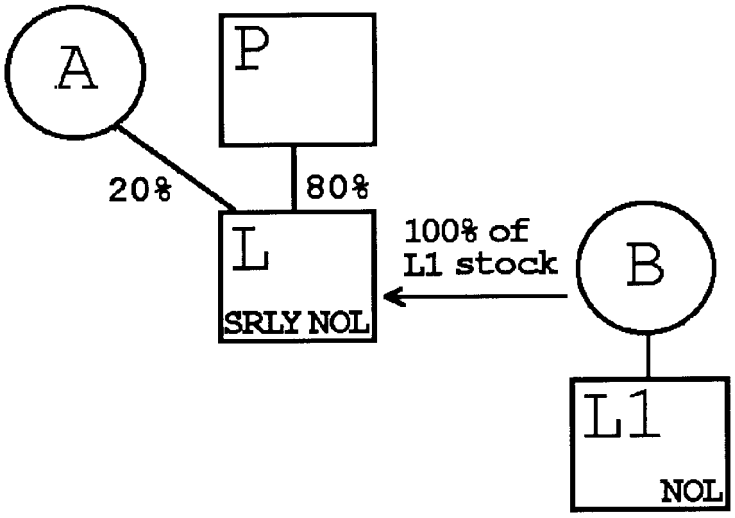

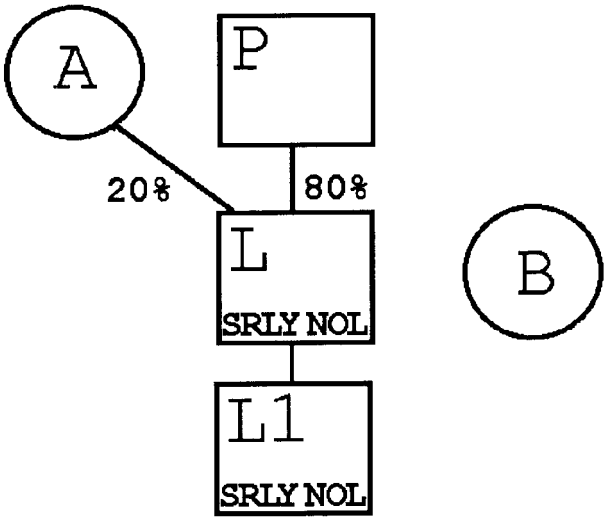

(b) L1 is a new loss member because it has a net operating loss carryover from Year 3 that arose in a SRLY with respect to the P group and L1 is not a member of a loss subgroup under § 1.1502–91A(d)(1).

(c) L's purchase of all the stock of L1 causes an ownership change of L1 on December 31, Year 6, under section 382 and § 1.382–2T. Accordingly, a section 382 limitation based on the value of the L1 stock immediately before the ownership change limits the amount of consolidated taxable income of the P group for any post-change year that may be offset by L1's loss from Year 3.

(d) L1's ownership change in connection with its becoming a member of the P group is an ownership change described in § 1.1502–96A(a). Thus, starting on January 1, Year 7, the P group no longer separately tracks owner shifts of the stock of L1 with respect to L1's loss from Year 3. Instead, the P group is a loss group because of such loss under § 1.1502–91A(c).

Example 3. Ownership changes of new loss members. (a) The facts are the same as in *Example 2,* and, on April 30, Year 7, C purchases all the stock of P for cash.

(b) L is a new loss member on April 30, Year 7, because its Year 1 and Year 2 losses arose in SRLYs with respect to the P group and it is not a member of a loss subgroup under § 1.1502–91A(d)(1). The testing period for L commences on May 1, Year 4. C's purchase of all the P stock causes an ownership change of L on April 30, Year 7, under section 382 and § 1.382–2T with respect to its Year 1 and Year 2 losses. Accordingly, a section 382 limitation based on the value of the L stock immediately before the ownership change limits the amount of consolidated taxable income of the P group for any post-change year that may be offset by L's Year 1 and Year 2 losses. See also § 1.1502–21T in effect prior to June 25, 1999, contained in 26 CFR Part 1, revised April 1, 1999, or § 1.1502–21, as applicable.

(c) The P group is a loss group on April 30, Year 7, because it is entitled to use L1's loss from Year 3, and such loss is no longer treated as a loss of a new loss member starting the day after L1's ownership change on December 31, Year 6. See §§ 1.1502–96A(a) and 1.1502–91A(c)(2). C's purchase of all the P stock causes an ownership change of P, and therefore the P loss group, on April 30, Year 7, with respect to L1's Year 3 loss. Accordingly, a consolidated section 382 limitation based on the value of the P stock immediately before the ownership change limits the amount of consolidated taxable income of the P group for any post-change year that may be offset by L1's Year 3 loss.

(c) *Built-in gains and losses.* As the context may require, the principles of §§ 1.1502–91A(g) and (h) and 1.1502–93A(c) (relating to built-in gains and losses) apply to a new loss member on a separate entity basis. See § 1.1502–91A(g)(3).

(d) *Information statements.* The common parent of a consolidated group that has a new loss member subject to paragraph (b)(1) of this section during a consolidated return year must file the information statement required by § 1.382–2T(a)(2)(ii) because of any owner shift, equity structure shift, or issuance or transfer of an option with respect to the new loss member. Instead of filing a separate statement for each new loss member the common parent may file a single statement described in § 1.382–2T(a)(2)(ii) with respect to the stock ownership of the common parent (which is treated as a loss corporation). In addition to the information concerning stock ownership of the common parent, the single statement must identify each new loss member and state which new loss members, if any, have had ownership changes during the consolidated return year. The new loss member is, however, required to maintain the records necessary to determine if it has an ownership change. This paragraph (d) applies with respect to the attributes of a new loss member until an event occurs which ends separate tracking under § 1.1502–96A(a). After that time, the information statement described in § 1.1502–92A(e)(1) must be filed with respect to these attributes.

[T.D. 8678, 61 FR 33352, June 27, 1996, as amended by T.D. 8823, 64 FR 36100, July 2, 1999. Redesignated and amended by T.D. 8824, 64 FR 36125, 36126, 36128, July 2, 1999]

§ 1.1502–95A Rules on ceasing to be a member of a consolidated group generally applicable for corporations ceasing to be members before June 25, 1999.

(a) *In general*—(1) *Consolidated group.* This section provides rules for applying section 382 on or after the day that a member ceases to be a member of a consolidated group (or loss subgroup). The rules concern how to determine whether an ownership change occurs with respect to losses of the member, and how a consolidated section 382 limitation (or subgroup section 382 limitation) is apportioned to the member. As the context requires, a reference in this section to a loss group, a member, or a

corporation also includes a reference to a loss subgroup, and a reference to a consolidated section 382 limitation also includes a reference to a subgroup section 382 limitation.

(2) *Election by common parent.* Only the common parent (not the loss subgroup parent) may make the election under paragraph (c) of this section to apportion either a consolidated section 382 limitation or a subgroup section 382 limitation.

(3) *Coordination with §§ 1.1502–91A through 1.1502–93A.* For rules regarding the determination of whether there is an ownership change of a loss subgroup and the computation of a subgroup section 382 limitation following such an ownership change, see §§ 1.1502–91A through 1.1502–93A.

(b) *Separate application of section 382 when a member leaves a consolidated group*—(1) *In general.* Except as provided in §§ 1.1502–91A through 1.1502–93A (relating to rules applicable to loss groups and loss subgroups), section 382 and the regulations thereunder apply to a corporation on a separate entity basis after it ceases to be a member of a consolidated group (or loss subgroup). Solely for purposes of determining whether a corporation has an ownership change—

(i) Any portion of a consolidated net operating loss that is apportioned to the corporation under § 1.1502–21(b) or 1.1502–21T(b) in effect prior to June 25, 1999, as contained in 26 CFR part 1 revised April 1, 1999, as applicable is treated as a net operating loss of the corporation beginning on the first day of the taxable year in which the loss arose;

(ii) The testing period may include the period during which (or before which) the corporation was a member of the group (or loss subgroup); and

(iii) Except to the extent provided in § 1.1502–20(g) (relating to reattributed losses), the day it ceases to be a member of a consolidated group is treated as a testing date of the corporation within the meaning of § 1.382–2(a)(4).

(2) *Effect of a prior ownership change of the group.* If a loss group has had an ownership change under § 1.1502–92A before a corporation ceases to be a member of a consolidated group (the former member)—

(i) Any pre-change consolidated attribute that is subject to a consolidated section 382 limitation continues to be treated as a pre-change loss with respect to the former member after the attribute is apportioned to the former member;

(ii) The former member's section 382 limitation with respect to such attribute is zero except to the extent the common parent apportions under paragraph (c) of this section all or a part of the consolidated section 382 limitation to the former member;

(iii) The testing period for determining a subsequent ownership change with respect to such attribute begins no earlier than the first day following the loss group's most recent change date; and

(iv) As generally provided under section 382, an ownership change of the former member that occurs on or after the day it ceases to be a member of a loss group may result in an additional, lesser limitation amount with respect to such loss.

(3) *Application in the case of a loss subgroup.* If two or more former members are included in the same loss subgroup immediately after they cease to be members of a consolidated group, the principles of paragraphs (b) and (c) of this section apply to the loss subgroup. Therefore, for example, an apportionment by the common parent under paragraph (c) of this section is made to the loss subgroup rather than separately to its members. –

(4) *Examples.* The following examples illustrate the principles of this paragraph (b).

Example 1. Treatment of departing member as a separate corporation throughout the testing period. (a) A owns all the L stock. L owns all the stock of L1 and L2. The L group has a consolidated net operating loss arising in Year 1 that is carried over to Year 3. On January 12, Year 2, A sells 30 percent of the L stock to B. On February 7, Year 3, L sells 40 percent of the L2 stock to C, and L2 ceases to be a member of the group. A portion of the Year 1 consolidated net operating loss is apportioned to L2 under § 1.1502–21(b) or 1.1502–21T(b) in effect prior to June 25, 1999, as contained in 26 CFR part 1 revised April 1, 1999, as applicable and is carried to L2's first separate return year, which ends December 31, Year 3. The following is a graphic illustration of these facts:

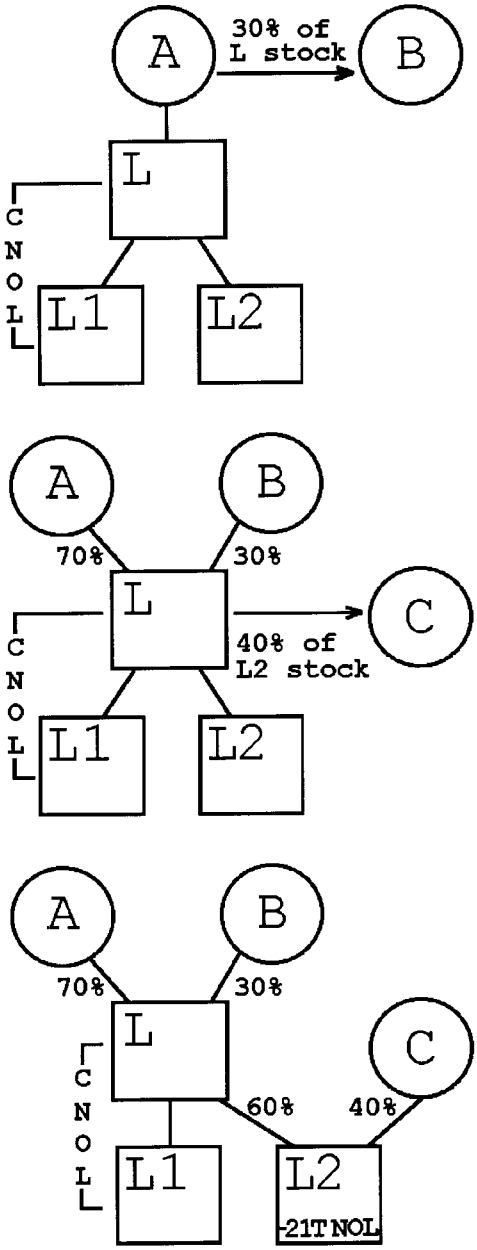

(b) Under paragraph (b)(1) of this section, L2 is a loss corporation on February 7, Year 3. Under paragraph (b)(1)(iii) of this section, February 7, Year 3, is a testing date. Under paragraph (b)(1)(ii) of this section, the testing period for L2 with respect to this testing date commences on January 1, Year 1, the first day of the taxable year in which the

portion of the consolidated net operating loss apportioned to L2 arose. Therefore, in determining whether L2 has an ownership change on February 7, Year 3, B's purchase of 30 percent of the L stock and C's purchase of 40 percent of the L2 stock are each owner shifts. L2 has an ownership change under section 382(g) and §1.382–2T because B and C have increased their ownership interests in L2 by 18 and 40 percentage points, respectively, during the testing period.

Example 2. Effect of prior ownership change of loss group. (a) L owns all the L1 stock and L1 owns all the L2 stock. The L loss group had an ownership change under §1.1502–92A in Year 2 with respect to a consolidated net operating loss arising in Year 1 and carried over to Year 2 and Year 3. The consolidated section 382 limitation computed solely on the basis of the value of the stock of L is $100. On December 31, Year 2, L1 sells 25 percent of the stock of L2 to B. L2 is apportioned a portion of the Year 1 consolidated net operating loss which it carries over to its first separate return year ending after December 31, Year 2. L2's separate section 382 limitation with respect to this loss is zero unless L elects to apportion all or a part of the consolidated section 382 limitation to L2. (See paragraph (c) of this section for rules regarding the apportionment of a consolidated section 382 limitation.) L apportions $50 of the consolidated section 382 limitation to L2.

(b) On December 31, Year 3, L1 sells its remaining 75 percent stock interest in L2 to C, resulting in an ownership change of L2. L2's section 382 limitation computed on the change date with respect to the value of its stock is $30. Accordingly, L2's section 382 limitation for post-change years ending after December 31, Year 3, with respect to its pre-change losses, including the consolidated net operating losses apportioned to it from the L group, is $30, adjusted as required by section 382 and the regulations thereunder.

(c) *Apportionment of a consolidated section 382 limitation*—(1) *In general.* The common parent may elect to apportion all or any part of a consolidated section 382 limitation to a former member (or loss subgroup). See paragraph (e) of this section for the time and manner of making the election to apportion.

(2) *Amount of apportionment.* The common parent may apportion all or part of each element of the consolidated section 382 limitation determined under §1.1502–93A. For this purpose, the consolidated section 382 limitation consists of two elements—

(i) The value element, which is the element of the limitation determined under section 382(b)(1) (relating to value multiplied by the long-term tax-exempt rate) without regard to such adjustments as those described in section 382(b)(2) (relating to the carryforward of unused section 382 limitation), section 382(b)(3)(B) (relating to the section 382 limitation for the post-change year that includes the change date), section 382(h) (relating to built-in gains and section 338 gains), and section 382(m)(2) (relating to short taxable years); and

(ii) The adjustment element, which is so much (if any) of the limitation for the taxable year during which the former member ceases to be a member of the consolidated group that is attributable to a carryover of unused limitation under section 382(b)(2) or to recognized built-in gains under 382(h).

(3) *Effect of apportionment on the consolidated section 382 limitation.* The value element of the consolidated section 382 limitation for any post-change year ending after the day that a former member (or loss subgroup) ceases to be a member(s) is reduced to the extent that it is apportioned under this paragraph (c). The consolidated section 382 limitation for the post-change year in which the former member (or loss subgroup) ceases to be a member(s) is also reduced to the extent that the adjustment element for that year is apportioned under this paragraph (c).

(4) *Effect on corporations to which the consolidated section 382 limitation is apportioned.* The amount of the value element that is apportioned to a former member (or loss subgroup) is treated as the amount determined under section 382(b)(1) for purposes of determining the amount of that corporation's (or loss subgroup's) section 382 limitation for any taxable year ending after the former member (or loss subgroup) ceases to be a member(s). Appropriate adjustments must be made to the limitation based on the value element so apportioned for a short taxable year, carryforward of unused limitation, or any other adjustment required under section 382. The adjustment element apportioned to a former member (or loss subgroup) is treated as an adjustment under section 382(b)(2) or section

382(h), as appropriate, for the first taxable year after the member (or members) ceases to be a member (or members).

(5) *Deemed apportionment when loss group terminates.* If a loss group terminates, to the extent the consolidated section 382 limitation is not apportioned under paragraph (c)(1) of this section, the consolidated section 382 limitation is deemed to be apportioned to the loss subgroup that includes the common parent, or, if there is no loss subgroup that includes the common parent immediately after the loss group terminates, to the common parent. A loss group terminates on the first day of the first taxable year that is a separate return year with respect to each member of the former loss group.

(6) *Appropriate adjustments when former member leaves during the year.* Appropriate adjustments are made to the consolidated section 382 limitation for the consolidated return year during which the former member (or loss subgroup) ceases to be a member(s) to reflect the inclusion of the former member in the loss group for a portion of that year.

(7) *Examples.* The following examples illustrate the principles of this paragraph (c).

Example 1. Consequence of apportionment. (a) L owns all the L1 stock and L1 owns all the L2 stock. The L group has a $200 consolidated net operating loss arising in Year 1 that is carried over to Year 2. At the close of December 31, Year 1, the group has an ownership change under §1.1502–92A. The ownership change results in a consolidated section 382 limitation of $10 based on the value of the stock of the group. On August 29, Year 2, L1 sells 30 percent of the stock of L2 to A. L2 is apportioned $90 of the group's $200 consolidated net operating loss under §1.1502–21(b) or 1.1502–21T(b) in effect prior to June 25, 1999, as contained in 26 CFR part 1 revised April 1, 1999, as applicable. L, the common parent, elects to apportion $6 of the consolidated section 382 limitation to L2. The following is a graphic illustration of these facts:

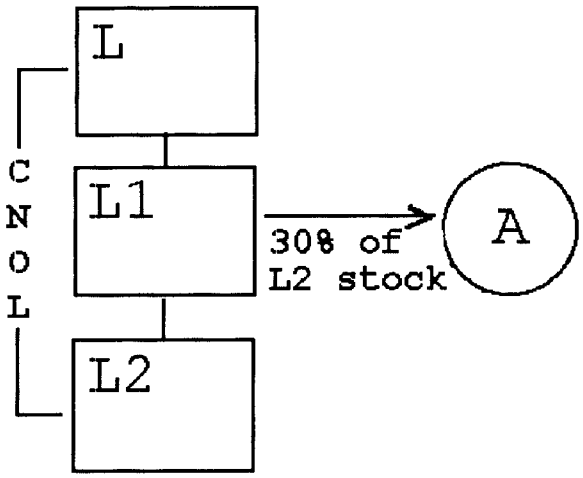

(b) For its separate return years ending after August 29, Year 2 (other than the taxable year ending December 31, Year 2), L2's section 382 limitation with respect to the $90 of the group's net operating loss apportioned to it is $6, adjusted, as appropriate, for any short taxable year, unused section 382 limitation, or other adjustment. For its consolidated return years ending after August 29, Year 2, (other than the year ending December 31, Year 2) the L group's consolidated section 382 limitation with respect to the remaining $110 of pre-change consolidated attribute is $4 ($10 minus the $6 value element apportioned to L2), adjusted, as appropriate, for any short taxable year, unused section 382 limitation, or other adjustment.

(c) For the L group's consolidated return year ending December 31, Year 2, the value element of its consolidated section 382 limitation is increased by $4 (rounded to the nearest dollar), to account for the period during which L2 was a member of the L group ($6, the consolidated section 382 limitation apportioned to L2, times 241/365, the ratio of the number of days during Year 2 that L2 is a member of the group to the number of days in the group's consolidated return year). See paragraph (c)(6) of this section. Therefore, the value element of the consolidated section 382 limitation for Year 2 of the L group is $8 (rounded to the nearest dollar).

(d) The section 382 limitation for L2's short taxable year ending December 31, Year 2, is $2 (rounded to the nearest dollar), which is the amount that bears the same relationship to $6, the value element of the consolidated section 382 limitation apportioned to L2, as the number of days during that short taxable year, 124 days, bears to 365. See § 1.382–4(c).

Example 2. Consequence of no apportionment. The facts are the same as in *Example 1,* except that L does not elect to apportion any portion of the consolidated section 382 limitation to L2. For its separate return years ending after August 29, Year 2, L2's section 382 limitation with respect to the $90 of the group's pre-change consolidated attribute apportioned to L2 is zero under paragraph (b)(2)(ii) of this section. Thus, the $90 consolidated net operating loss apportioned to L2 cannot offset L2's taxable income in any of its separate return years ending after August 29, Year 2. For its consolidated return years ending after August 29, Year 2, the L group's consolidated section 382 limitation with respect to the remaining $110 of pre-change consolidated attribute is $10, adjusted, as appropriate, for any short taxable year, unused section 382 limitation, or other adjustment.

Example 3. Apportionment of adjustment element. The facts are the same as in *Example 1,* except that L2 ceases to be a member of the L group on August 29, Year 3, and the L group has a $4 carryforward of an unused consolidated section 382 limitation (under section 382(b)(2)) to the 1993 consolidated return year.

The carryover of unused limitation increases the consolidated section 382 limitation for the Year 3 consolidated return year from $10 to $14. L may elect to apportion all or any portion of the $10 value element and all or any portion of the $4 adjustment element to L2.

(d) *Rules pertaining to ceasing to be a member of a loss subgroup*—(1) *In general.* A corporation ceases to be a member of a loss subgroup—

(i) On the first day of the first taxable year for which it files a separate return; or

(ii) The first day that it ceases to bear a relationship described in section 1504(a)(1) to the loss subgroup parent (treating for this purpose the loss subgroup parent as the common parent described in section 1504(a)(1)(A)).

(2) *Examples.* The principles of this paragraph (d) are illustrated by the following examples.

Example 1. Basic case. (a) P owns all the L stock, L owns all the L1 stock and L1 owns all the L2 stock. The P group has a consolidated net operating loss arising in Year 1 that is carried over to Year 2. On December 11, Year 2, P sells all the stock of L to corporation M. Each of L, L1, and L2 is apportioned a portion of the Year 1 consolidated net operating loss, and thereafter each joins with M in filing consolidated returns. Under § 1.1502–92A, the L loss subgroup has an ownership change on December 11, Year 2. The L loss subgroup has a subgroup section 382 limitation of $100. The following is a graphic illustration of these facts:

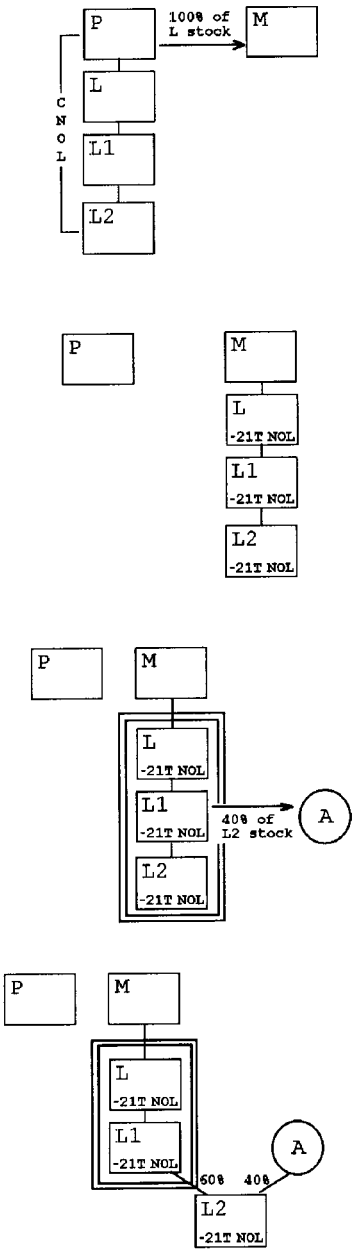

(b) On May 22, Year 3, L1 sells 40 percent of the L2 stock to A. L2 carries over a portion of the P group's net operating loss from Year 1 to its separate return year ending December 31, Year 3. Under paragraph (d)(1) of this section, L2 ceases to be a member of the L loss subgroup on May 22, Year 3, which is both (1) the first day of the first taxable year

for which it files a separate return and (2) the day it ceases to bear a relationship described in section 1504(a)(1) to the loss subgroup parent, L. The net operating loss of L2 that is carried over from the P group is treated as a pre-change loss of L2 for its separate return years ending after May 22, Year 3. Under paragraphs (a)(2) and (b)(2) of this section, the separate section 382 limitation with respect to this loss is zero unless M elects to apportion all or a part of the subgroup section 382 limitation of the L loss subgroup to L2.

Example 2. Formation of a new loss subgroup. The facts are the same as in *Example 1,* except that A purchases 40 percent of the L1 stock from L rather than purchasing L2 stock from L1. L1 and L2 file a consolidated return for their first taxable year ending after May 22, Year 3, and each of L1 and L2 carries over a part of the net operating loss of the P group that arose in Year 1. Under paragraph (d)(1) of this section, L1 and L2 cease to be members of the L loss subgroup on May 22, Year 3. The net operating losses carried over from the P group are treated as pre-change subgroup attributes of the loss subgroup composed of L1 and L2. The subgroup section 382 limitation with respect to those losses is zero unless M elects to apportion all or part of the subgroup section 382 limitation of the L loss subgroup to the L1 loss subgroup. The following is a graphic illustration of these facts:

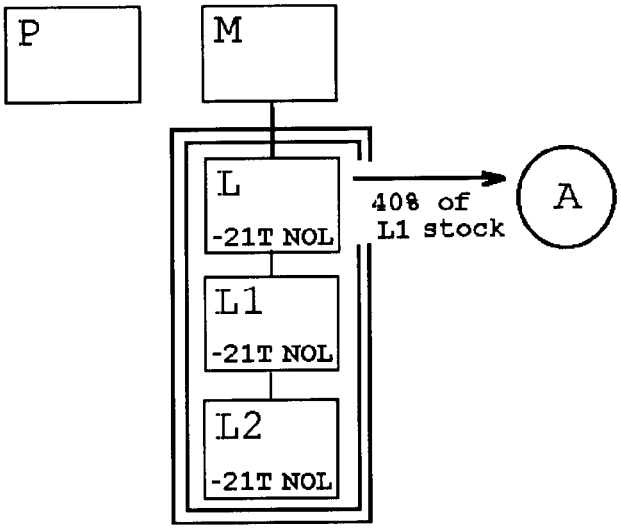

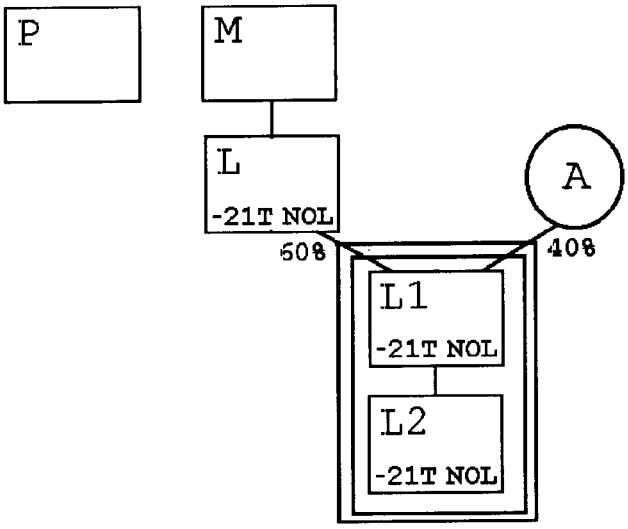

Example 3. Ceasing to bear a section 1504(a)(1) relationship to a loss subgroup parent. (a) A owns all the stock of P, and P owns all the stock of L1 and L2. The P group has a consolidated net operating loss arising in Year 1 that is carried over to Year 3 and Year 4. Corporation M acquires all the stock of P on November 11, Year 3, and P, L1, and L2 thereafter file consolidated returns with M. M's acquisition results in an ownership change of the P loss subgroup under §1.1502–92A(b)(1)(ii). The following is a graphic illustration of these facts:

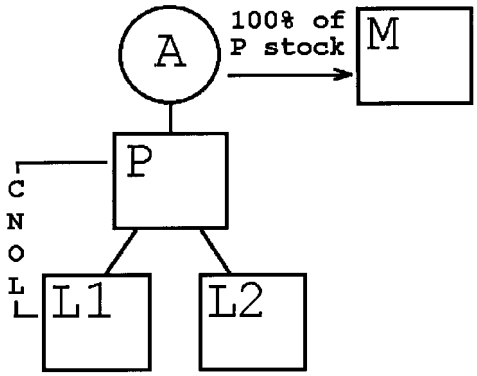

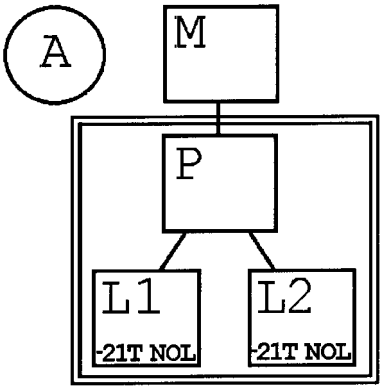

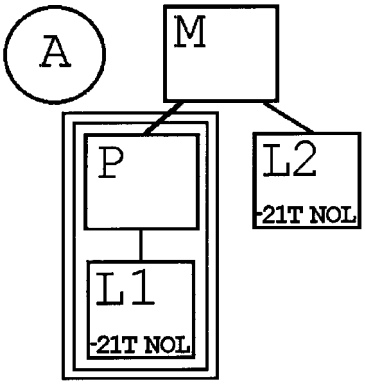

(b) P distributes the L2 stock to M on October 7, Year 4. L2 ceases to be a member of the P loss subgroup on October 7, Year 4, the first day that it ceases to bear the relationship described in section 1504(a)(1) to P, the P loss subgroup parent. See paragraph (d)(1)(ii) of this section. Thus, the section 382 limitation with respect to the pre-change

subgroup attributes attributable to L2 is zero except to the extent M elects to apportion all or a part of the subgroup section 382 limitation of the P loss subgroup to L2.

Example 4. Relationship through a successor. The facts are the same as in *Example 3,* except that, instead of P's distributing the stock of L2, L2 merges into L1 on October 7, Year 4. L1 (as successor to L2 in the merger within the meaning of §1.382–2T(f)(4)) continues to bear a relationship described in section 1504(a)(1) to P, the loss subgroup parent. Thus, L2 does not cease to be a member of the P loss subgroup as a result of the merger.

(e) *Filing the election to apportion*—(1) *Form of the election to apportion.* An election under paragraph (c) of this section must be made by the common parent. The election must be made in the form of the following statement: ''THIS IS AN ELECTION UNDER §1.1502–95A OF THE INCOME TAX REGULATIONS TO APPORTION ALL OR PART OF THE [insert either CONSOLIDATED SECTION 382 LIMITATION or SUBGROUP SECTION 382 LIMITATION, as appropriate] TO [insert name and E.I.N. of the corporation (or the corporations that compose a new loss subgroup) to which allocation is made]. The declaration must also include the following information, as appropriate—

(i) The date of the ownership change that resulted in the consolidated section 382 limitation (or subgroup section 382 limitation);

(ii) The amount of the consolidated section 382 limitation (or subgroup section 382 limitation) for the taxable year during which the former member (or new loss subgroup) ceases to be a member of the consolidated group (determined without regard to any apportionment under this section;

(iii) The amount of the value element and adjustment element of the consolidated section 382 limitation (or subgroup section 382 limitation) that is apportioned to the former member (or new loss subgroup) pursuant to paragraph (c) of this section; and

(iv) The name and E.I.N. of the common parent making the apportionment.

(2) *Signing of the election.* The election statement must be signed by both the common parent and the former member (or, in the case of a loss subgroup, the common parent and the loss subgroup parent) by persons authorized to sign their respective income tax returns.

(3) *Filing of the election.* The election statement must be filed by the common parent of the group that is apportioning the consolidated section 382 limitation (or the subgroup section 382 limitation) with its income tax return for the taxable year in which the former member (or new loss subgroup) ceases to be a member. The common parent must also deliver a copy of the statement to the former member (or the members of the new loss subgroup) on or before the day the group files its income tax return for the consolidated return year that the former member (or new loss subgroup) ceases to be a member. A copy of the statement must be attached to the first return of the former member (or the first return in which the members of a new loss subgroup join) that is filed after the close of the consolidated return year of the group of which the former member (or the members of a new loss subgroup) ceases to be a member.

(4) *Revocation of election.* An election statement made under paragraph (c) of this section is revocable only with the consent of the Commissioner.

[T.D. 8678, 61 FR 33355, June 27, 1996, as amended by T.D. 8823, 64 FR 36101, July 2, 1999. Redesignated and amended by T.D. 8824, 64 FR 36126, 36128, July 2, 1999]

§ 1.1502–96A Miscellaneous rules generally applicable for testing dates before June 25, 1999.

(a) *End of separate tracking of losses*—(1) *Application.* This paragraph (a) applies to a member (or a loss subgroup) with a net operating loss carryover that arose (or is treated under §1.1502–21(c) or 1.1502–21T(c) in effect prior to June 25, 1999, as contained in 26 CFR part 1 revised April 1, 1999, as applicable as arising) in a SRLY (or a net unrealized built-in gain or loss determined at the time that the member (or loss subgroup) becomes a member of the consolidated group if there is—

(i) An ownership change of the member (or loss subgroup in connection with, or after, becoming a member of the group; or

(ii) A period of 5 consecutive years following the day that the member (or loss subgroup) becomes a member of a group during which the member (or loss subgroup) has not had an ownership change.

(2) *Effect of end of separate tracking.* If this paragraph (a) applies with respect to a member (or loss subgroup), then, starting on the day after the earlier of the change date (but not earlier than the day the member (or loss subgroup) becomes a member of the consolidated group) or the last day of the 5 consecutive year period described in paragraph (a)(1)(ii) of this section, the member's net operating loss carryover that arose (or is treated under §1.1502–21(c) or 1.1502–21T(c) in effect prior to June 25, 1999, as contained in 26 CFR part 1 revised April 1, 1999, as applicable as arising) in a SRLY, is treated as described in §1.1502–91A(c)(1)(i). Also, the member's separately computed net unrealized built-in gain or loss is included in the determination whether the group has a net unrealized built-in gain or loss. The preceding sentences also apply for purposes of determining whether there is an ownership change with respect to such attributes following such change date (or earlier day) or 5 consecutive year period. Thus, for example, starting the day after the change date or the end of the 5 consecutive year period—

(i) The consolidated group which includes the new loss member or loss subgroup is no longer required to separately track owner shifts of the stock of the new loss member or loss subgroup parent to determine if an ownership change occurs with respect to the attributes of the new loss member or members included in the loss subgroup;

(ii) The group includes the member's attributes in determining whether it is a loss group under §1.1502–91A(c);

(iii) There is an ownership change with respect to such attributes only if the group is a loss group and has an ownership change; and

(iv) If the group has an ownership change, such attributes are pre-change consolidated attributes subject to the loss group's consolidated section 382 limitation.

(3) *Continuing effect of end of separate tracking.* As the context may require, a current group determines which of its members are included in a loss subgroup on any testing date by taking into account the application of this section in the former group. See the example in §1.1502–91A(f)(2).

(4) *Special rule for testing period.* For purposes of determining the beginning of the testing period for a loss group, the member's (or loss subgroup's) net operating loss carryovers (or net unrealized built-in gain or loss) described in paragraph (a)(2) of this section are considered to arise—

(i) In a case described in paragraph (a)(1)(i) of this section, in a taxable year that begins not earlier than the later of the day following the change date or the day that the member becomes a member of the group; and

(ii) in a case described in paragraph (a)(1)(ii) of this section, in a taxable year that begins 3 years before the end of the 5 consecutive year period.

(5) *Limits on effects of end of separate tracking.* The rule contained in this paragraph (a) applies solely for purposes of §§1.1502–91A through 1.1502–95A and this section (other than paragraph (b)(2)(ii)(B) of this section (relating to the definition of pre-change attributes of a subsidiary)) and §1.1502–98A, and not for purposes of other provisions of the consolidated return regulations, including, for example, §§1.1502–15 and 1.1502–21 (or §1.1502–15T in effect prior to June 25, 1999, as contained in 26 CFR part 1 revised April 1, 1999, and 1.1502–21T in effect prior to June 25, 1999, as contained in 26 CFR part 1 revised April 1, 1999, as applicable) (relating to the consolidated net operating loss deduction). See also paragraph (c) of this section for the continuing effect of an ownership change with respect to pre-change attributes.

(b) *Ownership change of subsidiary*—(1) *Ownership change of a subsidiary because of options or plan or arrangement.* Notwithstanding §1.1502–92A, a subsidiary may have an ownership change for purposes of section 382 with respect to its attributes which a group or loss subgroup includes in making a determination under §1.1502–91A(c)(1) (relating to the definition of loss group) or §1.1502–91A(d) (relating to the definition of loss subgroup). The subsidiary has such an

ownership change if it has an ownership change under the principles of §1.1502–95A(b) and section 382 and the regulations thereunder (determined on a separate entity basis by treating the subsidiary as not being a member of a consolidated group) in the event of—

(i) The deemed exercise under §1.382–4(d) of an option or options (other than an option with respect to stock of the common parent) held by a person (or persons acting pursuant to a plan or arrangement) to acquire more than 20 percent of the stock of the subsidiary; or

(ii) An increase by 1 or more 5-percent shareholders, acting pursuant to a plan or arrangement to avoid an ownership change of a subsidiary, in their percentage ownership interest in the subsidiary by more than 50 percentage points during the testing period of the subsidiary through the acquisition (or deemed acquisition pursuant to §1.382–4(d)) of ownership interests in the subsidiary and in higher-tier members with respect to the subsidiary.

(2) *Effect of the ownership change*—(i) *In general.* If a subsidiary has an ownership change under paragraph (b)(1) of this section, the amount of consolidated taxable income for any post-change year that may be offset by the pre-change losses of the subsidiary shall not exceed the section 382 limitation for the subsidiary. For purposes of this limitation, the value of the subsidiary is determined solely by reference to the value of the subsidiary's stock.

(ii) *Pre-change losses.* The pre-change losses of a subsidiary are—

(A) Its allocable part of any consolidated net operating loss which is attributable to it under §1.1502–21(b) or 1.1502–21T(b) in effect prior to June 25, 1999, as contained in 26 CFR part 1 revised April 1, 1999, as applicable (determined on the last day of the consolidated return year that includes the change date) that is not carried back and absorbed in a taxable year prior to the year including the change date;

(B) Its net operating loss carryovers that arose (or are treated under §1.1502–21(c) or 1.1502–21T(c) in effect prior to June 25, 1999, as contained in 26 CFR part 1 revised April 1, 1999, as applicable as having arisen) in a SRLY; and

(C) Its recognized built-in loss with respect to its separately computed net unrealized built-in loss, if any, determined on the change date.

(3) *Coordination with §§1.1502–91A, 1.1502–92A, and 1.1502–94A.* If an increase in percentage ownership interest causes an ownership change with respect to an attribute under this paragraph (b) and under §1.1502–92A on the same day, the ownership change is considered to occur only under §1.1502–92A and not under this paragraph (b). See §1.1502–94A for anti-duplication rules relating to value.

(4) *Example.* The following example illustrates paragraph (b)(1)(ii) of this section.

Example. Plan to avoid an ownership change of a subsidiary. (a) L owns all the stock of L1, L1 owns all the stock of L2, L2 owns all the stock of L3, and L3 owns all the stock of L4. The L group has a consolidated net operating loss arising in Year 1 that is carried over to Year 2. L has assets other than its L1 stock with a value of $900. L1, L2, and L3 own no assets other than their L2, L3, and L4 stock. L4 has assets with a value of $100. During Year 2, A, B, C, and D, acting pursuant to a plan to avoid an ownership change of L4, acquire the following ownership interests in the members of the L loss group: (A) on September 11, Year 2, A acquires 20 percent of the L1 stock from L and B acquires 20 percent of the L2 stock from L1; and (B) on September 20, Year 2, C acquires 20 percent of the stock of L3 from L2 and D acquires 20 percent of the stock of L4 from L3. The following is a graphic illustration of these facts:

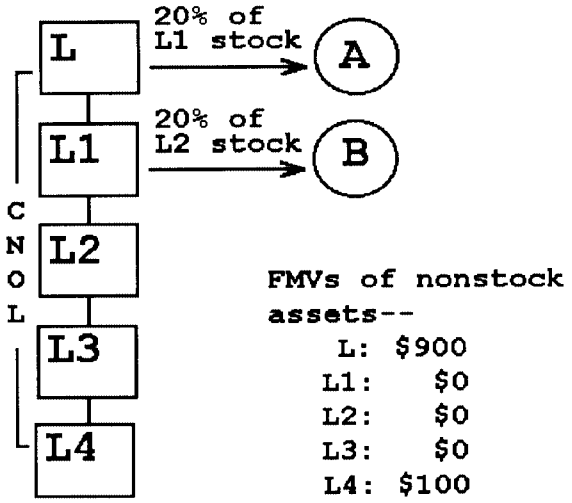

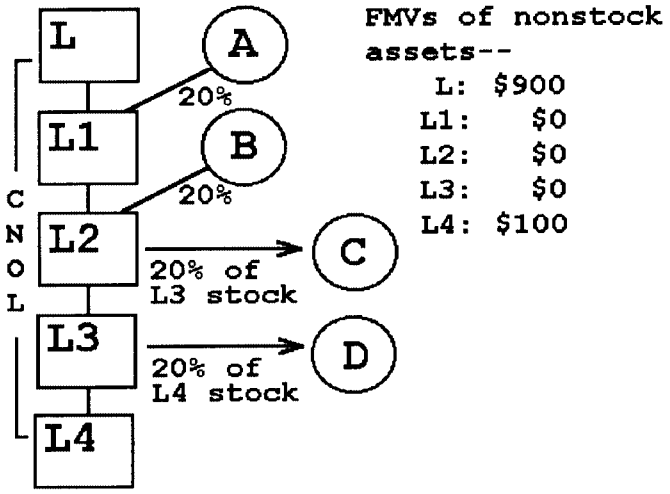

(b) The acquisitions by A, B, C, and D pursuant to the plan have increased their respective percentage ownership interests in L4 by approximately 10, 13, 16, and 20 percentage points, for a total of approximately 59 percentage points during the testing period. This more than 50 percentage point increase in the percentage ownership interest in L4 causes an ownership change of L4 under paragraph (b)(2) of this section.

(c) *Continuing effect of an ownership change.* A loss corporation (or loss subgroup) that is subject to a limitation under section 382 with respect to its

pre-change losses continues to be subject to the limitation regardless of whether it becomes a member or ceases to be a member of a consolidated group. See § 1.382–5(d) (relating to successive ownership changes and absorption of a section 382 limitation).

[T.D. 8678, 61 FR 33362, June 27, 1996; T.D. 8823, 64 FR 36101, July 2, 1999. Redesignated and amended at T.D. 8824, 64 FR 36126, 36128, July 2, 1999]

§ 1.1502–97A Special rules under section 382 for members under the jurisdiction of a court in a title 11 or similar case. [Reserved]

[T.D. 8678, 61 FR 33364, June 27, 1996. Redesignated by T.D. 8824, 64 FR 36128, July 2, 1999]

§ 1.1502–98A Coordination with section 383 generally applicable for testing dates (or members joining or leaving a group) before June 25, 1999.

The rules contained in §§ 1.1502–91A through 1.1502–96A also apply for purposes of section 383, with appropriate adjustments to reflect that section 383 applies to credits and net capital losses. Similarly, in the case of net capital losses, general business credits, and excess foreign taxes that are pre-change attributes, § 1.383–1 applies the principles of §§ 1.1502–91A through 1.1502–96A. For example, if a loss group has an ownership change under § 1.1502–92A and has a carryover of unused general business credits from a pre-change consolidated return year to a post-change consolidated return year, the amount of the group's regular tax liability for the post-change year that can be offset by the carryover cannot exceed the consolidated section 383 credit limitation for that post-change year, determined by applying the principles of §§ 1.383–1(c)(6) and 1.1502–93A (relating to the computation of the consolidated section 382 limitation).

[T.D. 8678, 61 FR 33364, June 27, 1996. Redesignated and amended by T.D. 8824, 64 FR 36126, 36128, July 2, 1999]

§ 1.1502–99A Effective dates.

(a) *Effective date*—(1) *In general.* Except as provided in § 1.1502–99(b), §§ 1.1502–91A through 1.1502–96A and 1.1502–98A apply to any testing date on or after January 1, 1997, and before June 25, 1999. Sections 1.1502–94A through 1.1502–96A also apply on any date on or after January 1, 1997, and before June 25, 1999, on which a corporation becomes a member of a group or on which a corporation ceases to be a member of a loss group (or a loss subgroup).

(2) *Anti-duplication rules for recognized built-in gain.* Section 1.1502–93(c)(2) (relating to recognized built-in gain of a loss group or loss subgroup) applies to taxable years for which the due date for income tax returns (without extensions) is after June 25, 1999,

(b) *Testing period may include a period beginning before January 1, 1997.* A testing period for purposes of §§ 1.1502–91A through 1.1502–96A and 1.1502–98A may include a period beginning before January 1, 1997. Thus, for example, in applying § 1.1502–92A(b)(1)(i) (relating to the determination of an ownership change of a loss group), the determination of the lowest percentage ownership interest of any 5-percent shareholder of the common parent during a testing period ending on a testing date occurring on or after January 1, 1997, takes into account the period beginning before January 1, 1997, except to the extent that the period is more than 3 years before the testing date or is otherwise before the beginning of the testing period. See § 1.1502–92A(b)(1).

(c) *Transition rules*—(1) *Methods permitted*—(i) *In general.* For the period ending before January 1, 1997, a consolidated group is permitted to use any method described in paragraph (c)(2) of this section which is consistently applied to determine if an ownership change occurred with respect to a consolidated net operating loss, a net operating loss carryover (including net operating loss carryovers arising in SRLYs), or a net unrealized built-in loss. If an ownership change occurred during that period, the group is also permitted to use any method described in paragraph (c)(2) of this section which is consistently applied to compute the amount of the section 382 limitation that applies to limit the use of taxable income in any post-change year ending before, on, or after January 1, 1997. The preceding sentence does not preclude the imposition of an additional, lesser limitation due to a subsequent ownership change nor, except as

provided in paragraph (c)(1)(iii) of this section, does it permit the beginning of a new testing period for the loss group.

(ii) *Adjustments to offset excess limitation.* If an ownership change occurred during the period ending before January 1, 1997, and a method described in paragraph (c)(2) of this section was not used for a post-change year, the members (or group) must reduce the section 382 limitation for post-change years for which an income tax return is filed after January 1, 1997, to offset, as quickly as possible, the effects of any section 382 limitation that members took into account in excess of the amount that would have been allowable under §§1.1502–91A through 1.1502–96A and 1.1502–98A.

(iii) *Coordination with effective date.* Notwithstanding that a group may have used a method described in paragraph (c)(2)(ii) or (iii) of this section for the period before January 1, 1997, §§1.1502–91A through 1.1502–96A and 1.1502–98A apply to any testing date occurring on or after January 1, 1997, for purposes of determining whether there is an ownership change with respect to any losses and, if so, the collateral consequences. Any ownership change of a member other than the common parent pursuant to a method described in paragraph (c)(2)(ii) or (iii) of this section does not cause a new testing period of the loss group to begin for purposes of applying §1.1502–92A on or after January 1, 1997.

(2) *Permitted methods.* The methods described in this paragraph (c)(2) are:

(i) A method that does not materially differ from the rules in §§1.1502–91A through 1.1502–96A and 1.1502–98A (other than those in §1.1502–95A(c) and (b)(2)(ii) (relating to the apportionment of a section 382 limitation) as they would apply to a corporation that ceases to be a member of the group before January 1, 1997). As the context requires, the method must treat references to rules in current regulations as references to rules in regulations generally effective for taxable years before January 1, 1997. Thus, for example, the taxpayer must treat a reference to §1.382–4(d) (relating to options) as a reference to §1.382–2T(h)(4) for any testing date to which §1.382–2T(h)(4) applies. Similarly, a reference to §1.1502–21(c) or 1.1502–21T(c) in effect prior to June 25, 1999, as contained in 26 CFR part 1 revised April 1, 1999, as applicable may be a reference to §1.1502–21A(c), as appropriate. Furthermore, the method must treat all corporations that were affiliated on January 1, 1987, and continuously thereafter as having met the 5 consecutive year requirement of §1.1502–91A(d)(2)(i) on any day before January 1, 1992, on which the determination of net unrealized built-in gain or loss of a loss subgroup is made;

(ii) A reasonable application of the rules in section 382 and the regulations thereunder applied to each member on a separate entity basis, treating each member's allocable part of a consolidated net operating loss which is attributable to it under §1.1502–21(b) or 1.1502–21T(b) in effect prior to June 25, 1999, as contained in 26 CFR part 1 revised April 1, 1999, as applicable as a net operating loss of that member and applying rules similar to §1.382–8 to avoid duplication of value in computing the section 382 limitation for the member (see §1.382–8(h) (relating to the effective date and transition rules regarding controlled groups)); or

(iii) A method approved by the Commissioner upon application by the common parent.

(d) *Amended returns.* A group may file an amended return in connection with an ownership change occurring before January 1, 1997, to modify the amount of a section 382 limitation with respect to a consolidated net operating loss, a net operating loss carryover (including net operating loss carryovers arising in SRLYs), or a recognized built-in loss (or gain) only if it files amended returns:

(1) For the earliest taxable year ending after December 31, 1986, in which it had an ownership change, if any, under §1.1502–92A;

(2) For all subsequent taxable years for which returns have already been filed as of the date of the amended return;

(3) The modification with respect to all members for all taxable years ending in 1987 and thereafter complies with §§1.1502–91A through 1.1502–96A and 1.1502–98A; and

(4) The amended return(s) permitted by the applicable statute of limitations is/are filed before March 26, 1997.

(e) *Section 383.* This section also applies for the purposes of section 383, with appropriate adjustments to reflect that section 383 applies to credits and net capital losses.

[T.D. 8678, 61 FR 33364, June 27, 1996, as amended by T.D. 8823, July 2, 1999. Redesignated and amended by T.D. 8824, 64 FR 36126–36128, July 2, 1999]

DUAL CONSOLIDATED LOSSES INCURRED IN TAXABLE YEARS BEGINNING BEFORE OCTOBER 1, 1992

§ 1.1503–2A Dual consolidated loss.

(a) *In general.* This section applies for purposes of determining whether and to what extent the net operating loss of a dual resident corporation incurred in tax years beginning after December 31, 1986, shall be allowed to reduce the taxable income of any other member of the affiliated group. Except as provided in paragraph (c) of this section, any dual consolidated loss of a domestic corporation incurred in taxable years beginning after December 31, 1986, cannot reduce the taxable income of any affiliate of such domestic corporation for that or any other taxable year, regardless of whether those losses offset income of another corporation under the income tax laws of the foreign country and regardless of whether any of the income of any corporation that the loss may reduce in the foreign country is, has been, or will be subject to tax in the United States. This rule shall also apply to preclude the use of a dual consolidated loss to offset any income of an affiliate (whether or not an election to file a consolidated return has been made) by means of a transaction subject to section 381 of the Code. For purposes of the preceding sentence, an ''affiliate'' means any member of the affiliated group as determined under section 1504(a) without regard to the exceptions contained in section 1504(b) (other than section 1504(b)(3)) relating to includible corporations. Further, this rule shall also apply to preclude the use of a dual consolidated loss of a separate unit by a domestic corporation upon or as a result of the termination, liquidation, or sale of the separate unit. The following example illustrates the application of this paragraph (a).

Example. P, a domestic corporation, owns all of the outstanding stock of DRC, a domestic corporation. DRC is managed and controlled in Country W, a country which determines the tax residence of corporations according to place of management and control. Therefore, the income of DRC is subject to tax in both the United States and in Country W. There are currently no other corporations in Country W which could use the losses of DRC to offset income under the income tax laws of Country W. P no longer wishes to operate DRC as a separate corporation. Therefore DRC will be liquidated into P under section 332 of the Code. Normally, P, under section 381, would succeed to and take into account DRC's net operating loss carryovers. However, this paragraph (a) prohibits the net operating loss of DRC from reducing P's income (including income of P generated by assets previously held by DRC) for U.S. tax purposes. Therefore, DRC's net operating loss carryovers will not be available to offset P's income unless one of the exceptions described in paragraph (c) of this section applies.

(b) *Definitions.* The following definitions apply for purposes of this section.

(1) *Domestic corporation.* For purposes of this section, the term ''domestic corporation'' has the meaning assigned to it by sections 7701 (a)(3) and (a)(4) and shall also include any corporation treated as a domestic corporation by the Internal Revenue Code, including, but not limited to, section 269B and section 1504(d). Subject to the rules of paragraph (d) of this section, any separate unit (as defined in paragraph (b)(4) of this section) of a domestic corporation will be treated as a separate domestic corporation (and as a dual resident corporation) for purposes of this section. The following example illustrates the application of this paragraph (b)(1).

Example. A is a domestic corporation with a branch operation in Country X. A is owned by FP, a Country X corporation. Country X allows the Country X branch income and losses of A to be used to offset FP's losses or income. Under paragraph (d) of this section, the branch operations of A in Country X will be treated as a separate domestic corporation and as a dual resident corporation for purposes of this section. See paragraph (d) of this section for the treatment of any dual

consolidated loss of the branch operations of A.

(2) *Dual consolidated loss.* The term ''dual consolidated loss'' means the net operating loss (as defined in section 172(c) and the regulations thereunder) of a domestic corporation incurred in a year in which the corporation is a dual resident corporation. The fact that a particular item taken into account in computing such net operating loss deduction is not taken into account in computing income subject to income tax in a foreign country shall not cause such item to be excluded from the calculation of the dual consolidated loss. A dual consolidated loss shall arise even though no other person, corporation, or entity is permitted, under the income tax laws of the foreign country, to use by any means the losses, expenses or deductions of the dual resident corporation to offset income. A dual consolidated loss shall not include—

(i) The net operating loss incurred during that portion of the taxable year prior to the date on which the domestic corporation becomes a dual resident corporation or subsequent to the date on which the domestic corporation ceases to be a dual resident corporation. For purposes of determining the amount of the net operating loss incurred in that portion of the taxable year prior to the date on which the domestic corporation becomes a dual resident corporation or subsequent to the date on which the domestic corporation ceases to be a dual resident corporation, in no event shall more than a pro rata portion of the net operating loss commensurate with the portion of the taxable year during which the domestic corporation was not a dual resident corporation be allocated to that portion of the taxable year in which the domestic corporation was not a dual resident corporation; or

(ii) Losses incurred in taxable years beginning on or before December 31, 1986.

(3) *Dual resident corporation.* For purposes of this section, a domestic corporation shall be a dual resident corporation if the worldwide income of such corporation is subject to the income tax of a foreign country, or such corporation is subject to the income tax of a foreign country on a residence basis (and not on a source basis).

(4) *Separate unit.* Solely for purposes of this section, the term ''separate unit'' shall mean any of the following:

(i) A foreign branch as defined in § 1.367 (a)–6T(g);

(ii) A partnership interest; or

(iii) A trust interest.

(5) *Subject to tax.* For purposes of determining whether a domestic corporation is subject to the income tax of a foreign country on its income, the fact that the corporation has no actual tax liability to the foreign country for a particular taxable year shall not be taken into consideration.

(c) *Exceptions*—(1) *No ability to use dual consolidated loss under foreign law*—(i) *In general.* Paragraph (a) of this section shall not apply to a dual consolidated loss if—

(A) At no time after December 31, 1986, has there been any other person, corporation, or entity which, under the income tax laws of the foreign country, is permitted to use by any means the losses, expenses, or deductions of the dual resident corporation to offset income; and

(B) Under the income tax laws of the foreign country, the losses, expenses, or deductions of the dual resident corporation incurred in taxable years beginning after December 31, 1986, cannot be carried over or back to be used, by any means, to offset the income of any other person, corporation, or entity in other years.

(ii) *Limitations.* For purposes of paragraph (c)(1)(i) of this section, none of the following circumstances shall constitute a satisfaction of paragraph (c)(1)(i)(A) of this section—

(A) The failure to make use of an election (including, but not limited to, the ability to surrender losses, expenses or deductions) that would enable another person, corporation, or entity to use the losses, expenses, or deductions of the dual resident corporation to offset income under the income tax laws of the foreign country;

(B) The fact that the income tax laws of the foreign country deny the use of losses, expenses, or deductions of its

corporate residents that are also residents for tax purposes of another country to offset income of another person, corporation, or entity;

(C) The fact that the other person, corporation, or entity does not have sufficient income to benefit from an offset permitted under the income tax laws of the foreign country for a particular taxable year; or

(D) The fact that the dual resident corporation has no losses, expenses, or deductions during a particular taxable year.

(iii) *Examples.* The following examples illustrate this paragraph (c)(1).

Example (1). DRC, a domestic corporation, is also subject to tax in Country Y on its worldwide income. DRC has been filing a consolidated return for U.S. income tax purposes with DP, its domestic parent. DRC has also been able to use its losses to offset income of its affiliates in Country Y by using Country Y's form of consolidation. In order to prevent companies like DRC from taking losses against income of affiliates under Country Y law and then again using the losses of DRC to offset income of affiliates for U.S. tax purposes. Country Y law prevents a company which is also subject to tax on its worldwide income in another country, or is subject to tax on a residence basis in another country, from using the Country Y form of consolidation. DRC is a dual resident corporation as defined in paragraph (b)(3) of this section. DRC's losses are dual consolidated losses as defined in paragraph (b)(2) of this section which under paragraph (a) of this section may not be used to offset income of any other U.S. affiliate of DRC. The Country Y statute does not cause the exception provided by this paragraph (c)(1) to apply.

Example (2). P, a domestic corporation, owns DRC, a domestic corporation which is also subject to the income tax laws of Country Z on a residence basis, and FS, a Country Z corporation. Under Country Z laws, income or losses of DRC may not be consolidated with income or losses of P or FS. There is, however, a provision under Country Z's law by which DRC's unused losses could be carried forward, acquired, and used by FS if DRC is merged into FS. DRC's dual consolidated loss does not qualify for the exception from application of paragraph (a) provided by this paragraph (c)(1) because of the loss carryforward provisions under Country Z's income tax laws. However, DRC may qualify for an exemption from paragraph (a) of this section under the provisions of paragraph (c)(3) of this section.

Example (3). DRC is a dual resident corporation subject to tax on a residence basis in foreign country Y. Under the income tax laws of Y, DRC could elect to use its losses to offset the income of foreign entity FE on a Country Y consolidated income tax return for the taxable year ending December 31, 1987. Regardless of whether such election is made, DRC fails to satisfy the requirement of paragraph (c)(1)(i)(A) of this section.

Example (4). The same facts apply as in *Example* (3), except that Country Y changes its income tax law, effective as of January 1, 1987, to prevent the consolidation of losses by dual resident corporations. Under paragraph (c)(1)(ii)(B) of this section, the fact that this Country Y legislation prevents DRC from using its losses to offset the income of FE is disregarded and DRC fails to satisfy the requirement of paragraph (c)(1)(i)(A) of this section.

Example (5). The same facts apply as in *Example* (4), except that FE has no taxable income in taxable years 1987 through 1989. Moreover, DRC is profitable throughout this period and consequently has no losses which it could share with FE. Under paragraphs (c)(1)(ii) (C) and (D) of this section, the fact that FE would not receive a tax benefit from consolidation with DRC on a Country Y return is disregarded and DRC fails to satisfy the requirement of paragraph (c)(1)(i)(A) of this section. Because DRC does not have a net operating loss during 1987 through 1989, section 1503(d) does not affect the consolidation of DRC on a U.S. return for these years. However, DRC's failure to satisfy paragraph (c)(1)(i)(A) of this section at all times after December 31, 1986 will make it ineligible for the exception described in paragraph (c)(1) of this section with respect to any future taxable year in which it incurs a net operating loss.

Example (6). The same facts apply as in *Example* (5). In 1990, FE is transferred and is no longer eligible for consolidation on a Country Y return. There are no other entities with which DRC could consolidate under the income tax laws of Y. Nevertheless, since FE and DRC could have consolidated on a Country Y return during the period after December 31, 1986 and before the transfer of FE, DRC fails to satisfy the requirement of paragraph (c)(1)(i)(A) of this section in 1990 and in all future taxable years.

(2) *Elective agreement in place between United States and the foreign country.* Paragraph (a) of this section shall not apply to a dual consolidated loss to the extent such loss is subject to an election by the dual resident corporation to deduct the loss in the United States pursuant to an agreement entered into between the United States and the foreign country which puts into place an elective procedure through which losses would offset income in only one country.

(3) *Agreement to amend returns upon later use of losses, expenses, or deductions of a dual resident corporation*—(i) *In general.* Notwithstanding that, under the income tax laws of the foreign country, the losses, expenses, or deductions of the dual resident corporation can be carried over or back to offset, by some means, the income of any other person, corporation, or entity in other taxable years, paragraph (a) of this section shall not apply to a dual consolidated loss of that dual resident corporation if the requirements described in this paragraph (c)(3)(i) are satisfied.

(A) At no time after December 31, 1986, has there been any other person, corporation, or entity which, under the income tax laws of the foreign country, is permitted to use by any means the losses, expenses, or deductions of the dual resident corporation to offset income. For purposes of the preceding sentence, none of the circumstances described in paragraphs (c)(1)(ii) (A) through (D) of this section shall constitute a satisfaction of this paragraph (c)(3)(i)(A).

(B) The affiliated group or, if there is no affiliated group filing a consolidated return, the dual resident corporation which incurs the loss, files with its U.S. tax return for the taxable year in which the dual consolidated loss arises a binding agreement described in paragraphs (c)(3) (ii) and (iii) of this section. The agreement must be filed under this paragraph (c)(3) even if the only effect of the dual consolidated loss is to increase a net operating loss for U.S. tax purposes.

(ii) *Description of agreement.* Except as otherwise provided in paragraph (c)(3)(viii) of this section, the agreement described in this paragraph (c)(3)(ii) must be attached to, and filed by the due date (including extensions) of, the tax return of the affiliated group or dual resident corporation for the taxable year in which the dual consolidated loss arises. The agreement must be signed under penalties of perjury by the person who signs the tax return of the group or dual resident corporation. The agreement must include the following items, in paragraphs labeled to correspond with the subdivisions set forth below:

(A) The name, address, identifying number, and place and date of incorporation of the dual resident corporation and the country or countries which tax the dual resident corporation on a residence basis or which tax the worldwide income of the dual resident corporation;

(B) A statement that the document submitted constitutes the agreement of the affiliated group or dual resident corporation in accordance with the requirements of § 1.1503–2T(c)(3);

(C) A statement of the amount of the dual consolidated loss to be covered by the agreement and the year in which it arose;

(D) The agreement of the group or dual resident corporation to amend returns, as described in paragraph (c)(3)(iii) of this section;

(E) A waiver of the period of limitations, as described in paragraph (c)(3)(iv) of this section; and

(F) An agreement to file with the tax returns of the group or dual resident corporation for each of the fifteen years following the year the dual consolidated loss arose a waiver of the period of limitation, as described in paragrapah (c)(3)(iv) of this section, and a certification as described in paragraph (c)(3)(v) of this section.

(iii) *Terms of agreement.* The affiliated group or dual resident corporation must agree that if there is a ''triggering event'' described in this paragraph (c)(3)(iii), then, the affiliated group filing a consolidated return, or if there is no affiliated group filing a consolidated return, the dual resident corporation, shall, within 90 days after the date of occurrence of the triggering event, file an amended U.S. income tax return for the taxable year in which the dual consolidated loss arose reporting the dual consolidated loss on the amended return as a loss to which paragraph (a) of this section applies. An amended U.S. income tax return must also be filed for any other taxable year in which the tax liability increases as a result of such applications of paragraph (a) of this section. In addition, upon examination, the group or dual resident corporation must provide to the District Director a schedule of the amended carryforward and carryback losses and credits for each of

the group's or dual resident corporation's taxable years for which no amended return is required to be filed pursuant to this paragraph (c)(3)(iii). For purposes of section 6601, the last date prescribed for payment of the additional amount of tax shown on an amended return filed pursuant to this paragraph (c)(3)(iii) shall be the same date as the date prescribed for the payment of tax for the taxable year with respect to which the amended return is filed. Any of the following events shall constitute a ''triggering event'' for purposes of this section—

(A) There is a failure for any taxable year to file the annual waiver or certification described in paragraphs (c)(3)(iv) and (v) of this section.

(B) Prior to the close of the fifteenth taxable year following the taxable year in which the dual consolidated loss arose, any of the following events—

(*1*) There is a failure to satisfy both the requirement of paragraph (c)(3)(i)(A) of this section and the requirements of paragraph (c)(4) of this section;

(*2*) Where the agreement is made by an affiliated group filing a consolidated return, the dual resident corporation (or its successor-in-interest) ceases to be a member of the affiliated group;

(*3*) Where the agreement is made by a dual resident corporation that is not a member of an affiliated group filing a consolidated return, the dual resident corporation is no longer in existence; or

(*4*) Where the dual resident corporation is a separate unit of a domestic corporation, the domestic corporation sells or transfers the dual resident corporation.

(iv) *Waiver of period of limitation*. The affiliated group or the dual resident corporation (or the successor-in-interest of such group or dual resident corporation) must file, with the agreement to amend returns and with the tax return for each of the fifteen taxable years following the taxable year in which the dual consolidated loss arose, a waiver of the limitation on assessment of any tax resulting from the amendment of any return as described in paragraph (c)(3)(iii) of this section. The waiver shall extend the period for assessment of such tax to a date not earlier than three years after the return is filed for the fifteenth taxable year following the taxable year in which the dual consolidated loss arose. The waiver shall also contain such other terms with respect to assessment as may be considered by the Commissioner to be necessary to insure the assessment and collection of the correct tax liability for each year for which the waiver is required. The waiver must be signed by a person authorized to sign the agreement described in paragraph (c)(3)(ii) of this section. A failure, at any time, to comply with the requirements of this paragraph (c)(3) or with the terms of any agreement filed pursuant to this paragraph (c)(3) shall extend the period of assessment of such tax until three years after the date on which the Internal Revenue Service receives actual notice of the use of or of the ability to use the losses, expenses, or deductions of the dual resident corporation to offset the income of another person, corporation, or entity under the income tax laws of the foreign country.

(v) *Annual certification*. The affiliated group or the dual resident corporation (or the successor-in-interest of such group or dual resident corporation) must file with its income tax return for each of the fifteen taxable years following the taxable year in which the dual consolidated loss arose a certification that the losses, expenses, or deductions of the dual resident corporation were not used or permitted to be used to offset the income of another person, corporation, or entity under the income tax laws of a foreign country. The annual certification pursuant to this paragraph (c)(3)(v) must be signed under penalties of perjury by a person authorized to sign the agreement described in paragraph (c)(3)(ii) of this section. The certification must identify the dual consolidated loss with respect to which it is given by setting forth the taxpayer's year in which the loss arose and the amount of such loss and must warrant that arrangements have been made to insure that the group or dual resident corporation will be informed of any subsequent use of or ability to use the losses, expenses, or

deductions of the dual resident corporation to offset the income of another person, corporation, or entity under the income tax laws of the foreign country. If dual consolidated losses of more than one taxable year are subject to the rules of this paragraph (c)(3), the certifications for those years may be combined in a single document, but each dual consolidated loss must be separately identified.

(vi) *Special rules for a succeeding group or a successor-in-interest*—(A) *Ceasing to be a member of the affiliated group.* For purposes of this paragraph (c)(3), and except as otherwise provided in this paragraph (c)(3)(vi), a dual resident corporation shall be deemed to have ceased to be a member of the affiliated group that filed the agreement described in paragraph (c)(3)(ii) of this section if it is no longer a member of that group, as defined in § 1.1502–1(b), or if the group ceases to exist because the common parent is no longer in existence or is no longer a common parent or the group no longer files on the basis of a consolidated return. However, the obligation to file an amended return pursuant to the agreement described in paragraph (c)(3)(ii) of this section shall not apply and the dual resident corporation shall not be deemed to have ceased to be a member of the group for purposes of this paragraph (c)(3) where the dual resident corporation ceases to be a member of the group solely by reason of an acquisition of its assets by a member of the group in a transaction to which section 381(a) applies provided the successor-in-interest of the dual resident corporation continues to be a member of the group.

(B) *Special rules for a succeeding group.* The obligation to file an amended return pursuant to the agreement described in paragraph (c)(3)(ii) of this section shall not apply where the dual resident corporation becomes a member of a succeeding group as a result of an acquisition described in § 1.1502–13(f)(2)(i) (*a*) or (*b*) (relating generally to the acquisition of assets of, by, or from a member of the affiliated group in a tax-free reorganization) and the succeeding group attaches to, and files with, its timely filed (including extensions) tax return for the taxable year in which the acquisition takes place a binding agreement—

(*1*) Which sets forth the same terms as are described in paragraph (c)(3)(ii) of this section,

(*2*) In which the group agrees to be bound by the terms of the agreement previously filed by the terminating group, and

(*3*) In which the group agrees to all the terms set forth in paragraph (c)(3)(iii) of this section.

The agreement must be signed under penalties of perjury by the person who signs the tax return of the succeeding group.

(C) *Special rules for a successor-in-interest.* In the case of a dual resident corporation that was not a member of an affiliated group filing a consolidated return in the taxable year in which the dual consolidated loss arose and that filed an agreement described in paragraph (c)(3)(ii) of this section, the assets of which are acquired in a transaction described in section 381(a), such corporation shall not be required to file an amended return pursuant to paragraph (c)(3)(iii)(B)(*3*) of this section provided its successor-in-interest attaches a binding agreement to its timely filed (including extensions) tax return for the taxable year in which the acquisition takes place. The agreement must be signed under penalties of perjury by the person who signs the tax return of the successor-in-interest. The agreement must:

(*1*) Set forth the same terms as are described in paragraph (c)(3)(ii) of this section,

(*2*) State the agreement of the successor-in-interest to be bound by the terms of the agreement previously filed by the dual resident corporation, and

(*3*) State the agreement of the successor-in-interest to all the terms set forth in paragraph (c)(3)(iii) of this section.

(vii) *Definitions.* For purposes of this section—

(A) The terms *succeeding group* and *terminating group* shall have the same meaning as in § 1.1502.13(f)(2)(i); and

(B) The term *successor-in-interest* shall mean an acquiring corporation that succeeds to the tax attributes of

an acquired corporation under the provisions of section 381 by reason of a transaction described in section 381(a).

(viii) *Transition rules.* An affiliated group or a dual resident corporation (or a succeeding group or a successor-in-interest of a dual resident corporation) that meets the eligibility requirements described in paragraph (c)(3)(ix) of this section will be permitted to apply the transition rules in this paragraph (c)(3)(viii) for taxable years ending before December 31, 1989.

(A) The agreement in satisfaction of paragraph (c)(3) (ii) or (vi) of this section may be attached to the timely filed (including extensions) tax return of the affiliated group or of the dual resident corporation (or the succeeding group or the successor-in-interest of such dual resident corporation) for the first taxable year which ends on or after December 31, 1989. The agreement required for each of the taxable years ending before December 31, 1989 and for the first taxable year ending on or after December 31, 1989 may be combined on a single document.

(B) The requirement of paragraphs (c)(3)(iv) and (c)(3)(v) of this section regarding the filing of an annual waiver of the period of limitation and certification shall be satisfied for the taxable years ending before December 31, 1989, and no failure to file shall be deemed to have occurred with respect to such taxable years for purposes of paragraph (c)(3)(iii)(A) of this section if the waivers and certifications required under paragraphs (c)(3)(iv) and (c)(3)(v) of this section are filed with the tax return for the first taxable year ending on or after December 31, 1989.

(ix) *Eligibility for transition rules.* The rules in paragraph (c)(3)(viii) of this section shall apply only if, as of the date of the agreement in satisfaction of paragraph (c)(3) (ii) or (vi) of this section and filed pursuant to paragraph (c)(3)(viii) of this section, none of the triggering events described in paragraph (c)(3)(iii)(B) of this section has occurred.

(4) *No ability to use dual consolidated loss under foreign law after restructuring*—(i) *In general.* Notwithstanding that a dual resident corporation fails to satisfy either paragraph (c)(1)(i)(A) or (c)(3)(i)(A) of this section, paragraph (a) of this section shall not apply to any dual consolidated loss (or portion of a dual consolidated loss) described in paragraph (c)(4)(iii) of this section provided the requirements of either paragraph (c)(1)(i)(B) or (c)(3)(i)(B) of this section are satisfied and a restructuring that meets the requirements of paragraph (c)(4)(ii) of this section has been completed.

(ii) *Qualified restructuring.* A restructuring meets the requirements of this paragraph (c)(4)(ii) if it is completed on or before December 31, 1989, in the foreign country so that at all times from the date of such restructuring to the close of the taxable year in which the dual consolidated loss arises, there is no other person, corporation, or entity which, under the income tax laws of the foreign country, is permitted to use by any means the losses, expenses, or deductions of the dual resident corporation to offset income. For purposes of the preceding sentence, none of the circumstances described in paragraphs (c)(1)(ii) (A) through (D) of this section shall constitute a satisfaction of this paragraph (c)(4)(ii).

(iii) *Qualified losses.* Losses to which paragraph (c)(4)(i) of this section applies are the dual consolidated losses of a dual resident corporation that arise in a taxable year beginning after the restructuring described in paragraph (c)(4)(ii) of this section (or the portion of any dual consolidated loss that arises during that portion of the taxable year following the restructuring described in paragraph (c)(4)(ii) of this section). For purposes of determining the amount of the dual consolidated loss which arises in that portion of the taxable year following the restructuring, in no event shall more than a pro rata portion of the dual consolidated loss commensurate with the portion of the taxable year beginning with the date of completion of the restructuring and ending on the last day of that same taxable year be allocated to that portion of the taxable year following the restructuring.

(d) *Special rule for separate units*—(1) *Separate units characterized as corporations under foreign law.* If a separate unit of a domestic corporation consists of an interest in an entity (including a

foreign branch) that for U.S. tax purposes is not taxable as an association, but the entity is subject to income tax in a foreign jurisdiction as a corporation either on its worldwide income or on a residence basis (and not on a source basis), then for purposes of this section such separate unit of the domestic corporation will be treated as if it were a dual resident corporation and a wholly-owned domestic subsidiary of the domestic corporation. For purposes of paragraphs (c) (3) and (4) of this section, any agreement, waiver and certification required to be filed with respect to such dual resident corporation shall be filed with the federal income tax return of the domestic corporation owning the separate unit or by the affiliated group with which the domestic corporation files a consolidated return.

(2) *Other separate units.* Except as provided in paragraph (d)(3) of this section, if a separate unit of a domestic corporation (other than a separate unit described in paragraph (d)(1) of this section) is permitted under the income tax laws of a foreign country—

(i) To use its losses, expenses, or deductions to offset the income of any other person, corporation, or entity in the taxable year in which the dual consolidated loss arises; or

(ii) To carry over or back its losses, expenses, or deductions so that they may offset the income of any other person, corporation, or entity in other years, then such separate unit will be treated for purposes of this section as if it were a dual resident corporation and a wholly-owned domestic subsidiary of the domestic corporation. For purposes of the preceding sentence, none of the circumstances described in paragraphs (c)(1)(ii) (A) through (D) of this section shall preclude a separate unit from being treated as a dual resident corporation and a separate domestic corporation under this paragraph (d)(2). This paragraph (d)(2) applies regardless of whether the domestic corporation is a member of an affiliated group, and, if it is, regardless of whether the group files a consolidated return.

(3) *Certification.* Paragraph (d)(2) of this section shall not apply with respect to any taxable year for which the domestic corporation owning the separate unit (or the affiliated group of which the domestic corporation is a member) files a certification as described in this paragraph (d)(3). The certification must be attached to, and filed by the due date (including extensions) of, the federal income tax return of the domestic corporation owning the separate unit (or the affiliated group with which the domestic corporation files a consolidated return) for the taxable year to which it applies. With respect to returns filed without an attached certification for taxable years ending before December 31, 1989, the certification in satisfaction of this paragraph (d)(3) may be attached to the return for the first taxable year ending on or after December 31, 1989. The certification must be signed under penalties of perjury by the person who signs the return. The certification must include the following items, in paragraphs labeled to correspond with the subdivisions set forth below:

(i) A statement that the document submitted constitutes the certification required under the provisions of § 1.1503–2T(d)(3);

(ii) Identification of the separate unit, including the name under which it conducts business and its principal activity;

(iii) Identification of the total losses, expenses, and deductions incurred by the separate unit and included on the tax return for the taxable year;

(iv) Certification that no portion of the separate unit's losses, expenses or deductions identified above has been or will be used to offset the income of any other person, corporation, or entity under the income tax laws of the foreign country; and

(v) An agreement to comply with the recapture and interest charge requirements of paragraph (d)(4) of this section.

If the domestic corporation has more than one separate unit, the certification described above may be made on a single document, but the total losses, expenses, and deductions must be separately identified for each separate unit to which the certification applies.

(4) *Recapture upon subsequent use.* If in any taxable year any portion of the losses, expenses, or deductions of a separate unit which were the subject of a

certification filed under paragraph (d)(3) of this section are used by any means to offset the income of any other person, corporation, or entity under the income tax laws of a foreign country, then the total amount of the dual consolidated loss shall be recaptured and reported as income on the tax return of the domestic corporation (or the affiliated group with which the domestic corporation files a consolidated return) for the taxable year that includes the last day of the taxable year for foreign tax purposes during which such use occurred. In addition, the domestic corporation owning the separate unit (or the affiliated group with which the domestic files a consolidated return) shall pay an interest charge on the amount of additional tax owed as a result of the recapture described in the preceding sentence. Such interest shall be determined under the rules of section 6601(a) as if the additional amount of tax had accrued and been due and owing for the taxable year in which the losses, expenses, or deductions giving rise to the recapture gave rise to a tax benefit for U.S. income tax purposes. For purposes of this paragraph (d)(4), a tax benefit will be considered to have arisen in a taxable year in which a loss that would have been considered a dual consolidated loss if paragraph (d)(3) of this section had not applied has reduced the U.S. income tax liability of the domestic corporation or of the affiliated group with which it files a consolidated return.

(5) *Treatment of separate units as separate entities*—(i) *In general.* A separate unit of a domestic corporation will be treated as a separate entity for purposes of determining under this section whether losses of one entity are permitted under the income tax laws of the foreign country to offset the income of another entity.

(ii) *Exception for separate units in same country.* If two or more separate units (not described in paragraph (d)(1) of this section) located in the same foreign country are owned by a single domestic corporation and the income and losses of such units are consolidated on an income tax return in that foreign country, then the separate units will be treated as one separate unit for purposes of paragraph (d)(2) of this section.

(6) *Examples.* The following examples illustrate this paragraph (d).

Example (1). X, a member of a U.S. affiliated group, has a foreign branch (as defined in §1.367(a)–6T(g)) in Country Y. Under the Country Y income tax laws, the branch will be taxed as a permanent establishment and its income and losses may be used (on an elective basis) in the Country Y form of consolidation to offset the income of Z, an affiliate of X, under Country Y law. The branch of X incurs a net operating loss during the taxable year ending December 31, 1987. The foreign branch of X will be treated as a separate domestic corporation and a dual resident corporation under paragraph (d)(2) of this section, and its net operating loss will constitute a dual consolidated loss. Consequently, under paragraph (a) of this section, the branch's net operating loss may not be used to offset the income of any other U.S. affiliate or any income of X other than income derived from the branch operations. However, the branch will not be treated as a dual resident corporation if X (or the affiliated group of which X is a member) files a certification for the taxable year as described in paragraph (d)(3) of this section that its net operating loss was not in fact used by Z (or any other entity) to offset income under the Country Y income tax laws, and that such loss will be recaptured if it is so used in the future.

Example (2). X is classified as a partnership for U.S. tax purposes under Code section 7701 and applicable regulations. A, B and C are the sole partners of X. A and B are domestic corporations and C is a resident of foreign country Y. Under Country Y's law, X is classified as a corporation and its income and losses may be used in the Country Y form of consolidation to offset the income of the companies that are affiliates of X. X generates net operating losses. The partnership interests held by A and B are each treated as separate domestic corporations and dual resident corporations under paragraph (d)(1) of this section. A's and B's pro rata share of the losses of X are dual consolidated losses as defined in paragraph (b)(2) of this section. Under paragraph (a) of this section, the losses of X may not be used to offset the income of any other U.S. affiliate. A's pro rata share of losses of X may be used by A only to offset A's pro rata share of income of X. However, paragraph (a) of this section shall not apply to A's pro rata share of losses of X if A meets one of the exceptions described in paragraph (c) of this section. The same principles apply to limit the use of losses allocated to B.

Example (3). Domestic corporation W owns two unincorporated business operations in

Country Y. The two businesses, A and B, constitute separate foreign branches (as defined in §1.367(a)–6T(g)). Under the tax laws of Country Y, A is treated as a separate corporation and taxed on a residence basis. Thus, A is a separate unit described in paragraph (d)(1) of this section. B is not a separate unit described in paragraph (d)(1) of this section. W is a calendar year taxpayer for both United States and Country Y purposes. During the calendar year ending December 31, 1987, A operated at a loss and B was profitable. Country Y allows both of W's branches to report their combined operations on a single income tax return. Thus, the losses incurred by A may be used on the 1987 Country Y return to offset the income of B. A will be treated as a dual resident corporation under paragraph (d)(1) of this section. Because A is a separate unit described in paragraph (d)(1) of this section, paragraph (d)(5)(i) of this section treats A and B as separate entities for purposes of determining whether the losses, expenses, or deductions of A may be used to offset the income of another person, corporation, or entity and the exception in paragraph (d)(5)(ii) of this section does not apply. Since the loss incurred by A may be used to offset B's income under foreign tax laws, W will not qualify for the exceptions described in paragraph (c) of this section. Accordingly, W will report the income from B on its 1987 U.S. tax return, but will not be allowed to use the losses from A to offset that income or the income from any source other than from the operations of A.

(e) *Special rule for use of dual consolidated loss to offset tainted income*—(1) *In general.* The dual consolidated loss of any dual resident corporation that ceases to be a dual resident corporation shall not be used to offset income of such corporation to the extent that such income is tainted income as defined in paragraph (e)(2) of this section.

(2) *Tainted income defined.* Tainted income is any income derived from tainted assets (as defined in paragraph (e)(3) of this section), during the period beginning on the date of the transfer or acquisition of tainted assets and ending at the close of the fifteenth taxable year following the taxable year in which the dual resident corporation ceased to be a dual resident corporation.

(3) *Tainted assets defined.* Tainted assets are any assets transferred to or acquired by a dual resident corporation in a non-recognition transaction (as defined in section 7701(a)(45)) at any time during the three taxable years immediately preceding the taxable year in which such dual resident corporation ceased to be a dual resident corporation or at any time during the 15 taxable years immediately following the taxable year in which a dual resident corporation ceased to be a dual resident corporation. Tainted assets shall not include assets that were transferred to or acquired by such dual resident corporation on or before December 31, 1986.

(4) *Exception.* For assets transferred to or acquired by a dual resident corporation prior to the time it ceased to be a dual resident corporation, if it can be shown that, for the year in which assets were transferred to or acquired by such corporation, the corporation did not incur a dual consolidated loss (or carry forward a dual consolidated loss to such year) and that there was a valid business reason for the transfer or acquisition of such assets, the income derived from such assets shall not be subject to the limitation described in paragraph (e)(1) of this section.

(f) *Special rules for accounting for dual consolidated losses*—(1) *Determination of amount of dual consolidated loss*—(i) *Dual resident corporation that is a member of an affiliated group.* For purposes of determining whether a dual resident corporation that is a member of an affiliated group filing a consolidated return has a dual consolidated loss for the taxable year, the dual resident corporation shall compute its taxable income (or loss) in accordance with the provisions of §1.1502–12 (relating to computation of separate taxable income of a member of an affiliated group filing a consolidated return), determined by taking into account the adjustments provided in §1.1502–79A(a)(3), that is:

(A) The portion of the consolidated dividends received deduction, the consolidated charitable contributions deductions, and the consolidated section 247 deduction, attributable to such member;

(B) Such member's capital gain net income (determined without regard to any net capital loss carryover attributable to such member);

(C) Such member's net capital loss and section 1231 net loss, reduced by

the portion of the consolidated net capital loss attributable to such member (as determined under paragraph (b)(2) of § 1.1502–22; and

(D) The portion of any consolidated net capital loss carryover attributable to such member which is absorbed in the taxable year.

For purposes of this paragraph (f), any income, gain, or loss of a dual resident corporation shall not be deferred or eliminated under § 1.1502–13 (b)(2) or (c), or § 1.1502–14. Further, sections 267 and 163(e)(3) shall not apply.

(ii) *Dual resident corporation that is a separate unit of a domestic corporation.* For purposes of determining whether a dual resident corporation that is a separate unit of a domestic corporation has a dual consolidated loss for the taxable year, the dual resident corporation shall compute its taxable income (or loss) as if it were a separate domestic corporation and a dual resident corporation, using only those items of income, expenses, and deductions which are otherwise attributable to such separate unit.

(2) *Effect of dual consolidated loss.* For any taxable year in which a dual resident corporation has a dual consolidated loss to which paragraph (a) of this section applies, the following rules shall apply.

(i) If the dual resident corporation is a member of an affiliated group filing a consolidated return, then such affiliated group shall compute its taxable income without regard to the items of income, loss, or deduction of the dual resident corporation for the taxable year. The amount of taxable loss of the dual resident corporation for the taxable year shall be the amount of dual consolidated loss determined under paragraph (f)(1)(i) of this section. Such loss may be carried over or back for use in other taxable years as a net operating loss deduction by the dual resident corporation to the extent permitted under section 172. However, such loss shall be treated as a loss incurred by the dual resident corporation in a separate return limitation year, and, including in the case of a dual resident corporation that is a common parent, shall be subject to all of the limitations of §§ 1.1502–21A(c)(2) or 1.1502–21(c) (as appropriate) (relating to limitations on net operating loss carryovers and carrybacks from separate return limitation years).

(ii) If the dual resident corporation is a separate unit of a domestic corporation, then such domestic corporation and the affiliated group with which it may file a consolidated return shall compute taxable income for the taxable year without regard to the items of income, loss, or deductions of the dual resident corporation for the current year. Further, the loss of the dual resident corporation (the separate unit of the domestic corporation) shall be treated as a loss incurred by a separate corporation and its use shall be subject to all of the limitations of §§ 1.1502–21A(c)(2) or 1.1502–21(c) (as appropriate) (relating to limitations on net operating loss carryovers and carrybacks from separate return limitation years), as if such dual resident corporation were filing a consolidated return with the domestic corporation or with the affiliated group with which the domestic corporation files a consolidated return.

(3) *Basis adjustments for dual consolidated losses.* When a dual resident corporation is a member of an affiliated group filing a consolidated return, each member owning stock in the dual resident corporation shall adjust the basis of the stock in the manner described in subparagraphs (i) and (ii) of this paragraph (f)(3).

(i) *Positive adjustment.* Adjustments shall be made in accordance with the principles of § 1.1502–32(b)(1), except that there shall be no positive adjustment under § 1.1502–32(b)(1)(ii) for any amount of the dual consolidated loss which is not absorbed. There shall be no positive adjustment for any amount included in income upon the use of a dual consolidated loss in a foreign country under § 1.1503–2T(c)(3).

(ii) *Negative adjustments.* Adjustments shall be made in accordance with the principles of § 1.1502–32(b)(2), except that there shall be no negative adjustments under § 1.1502–32(b)(2)(ii) for the amount of the dual consolidated loss.

(4) *Examples.* The following examples illustrate this paragraph (f).

Example (1). (i) P, S1, S2, and T are domestic corporations. P owns all of the stock of S1 and S2. S2 owns all of the stock of T. T is

a dual resident corporation. None of the exceptions described in paragraph (c) apply with respect to T. P, S1, S2, and T have filed and continue to file a consolidated federal income tax return. X, Y, and Bank are corporations which are not members of the affiliated group of which P is the common parent.

(ii) At the beginning of 1989, P had a basis in S2 of $1000. S2 had a basis in T of $500.

(iii) In 1989, T had an interest expense of $100 on a loan from Bank. T sold a noncapital item *u* in which it had a basis of $10 to S1 for $50. T sold noncapital item *v* in which it had a basis of $200 to S1 for $100. The sale of *u* and *v* are deferred intercompany transactions described in §1.1502–13(a)(2). S1 had separate taxable income calculated in accordance with §1.1502–12 of $200. In addition, S1 sold item *w* in which it had a basis of $50 to T for $100. The sale of item *w* is a deferred intercompany transaction described in §1.1502–13(a)(2). P and S2 had no items of income, loss, or deduction for 1989.

(iv) For purposes of determining whether T has a dual consolidated loss in 1989 and the amount of such dual consolidated loss, T's taxable income (loss) is calculated under paragraph (f)(1) as follows:

($100)	interest expense to Bank
($100)	sale of item *v* to S1
$40	sale of item *u* to S1
($160)	

T therefore has a dual consolidated loss of $160 for 1989.

(v) Because T has a dual consolidated loss for the year, the consolidated taxable income of the P affiliated group is calculated without regard to the items of income, loss, or deduction of T. However, T is still a member of the P affiliated group. Therefore, the consolidated taxable income of the P group is $200 (attributable solely to the income of S1). The $50 gain recognized by S1 upon the sale of item *w* to T is deferred pursuant to §1.1502–13(c)(1).

(vi) S2 may not make the positive adjustment provided for in §1.1502–32(b)(1)(ii) to its basis in T for the dual consolidated loss incurred by T. However, S2 must make the negative adjustment provided for in §1.1502–32(b)(2)(i) for the amount of its allocable part of the deficit in earnings and profits of T for the taxable year. Thus, as provided in §1.1502–32(e)(1), S2 shall make a net negative adjustment to its basis in T of $160 and S2's basis in T is now $340. As provided in §1.1502–33(b)(4)(ii)(a), S2's earnings and profits for 1989 must reflect S2's decrease in its basis in T stock for the taxable year. Since S2 has no other earnings and profits for the taxable year, S2 has a deficit in earnings and profits of $160 for the taxable year. As provided in §1.1502–32(b)(2)(i), P must make a negative adjustment for the amount of its allocable part of the deficit in earnings and profits of S2 for the taxable year. Thus, P must make a net negative adjustment to its basis in S2 of $160 and P's basis in S2 is now $840.

Example (2). (i) The facts are the same as in *Example (1)*, except that in 1990, S1 sold items *u* and *v* to X for no gain or loss. T incurred an interest expense of $100 on a loan from Bank. T also sold item *q* in which it had a basis of $50 to S1 for $100. T also sold item *r* in which it had a basis of $100 to Y for $300. P and S2 had no items of income, loss, or deduction for 1990.

(ii) For purposes of determining whether T has a dual consolidated loss in 1990 and the amount of such dual consolidated loss, T's taxable income (loss) is:

($100)	interest expense to Bank
$50	sale of item *q* to S1
$200	sale of item *r* to Y
$150	

T therefore has no dual consolidated loss for 1990.

(iii) Since T does not have a dual consolidated loss for the taxable year, the group's consolidated taxable income is calculated in accordance with the general rule of §1.1502–11 and not in accordance with the rule of §1.1503–2T(f)(2). T has separate taxable income calculated in accordance with §1.1502–12 of $100. On the disposition of items *u* and *v* outside the P affiliated group, no gain or loss is restored to income to T in accordance with §1.1502–13(f)(1)(i) because the gain or loss on these items was not deferred, pursuant to §1.1503–2T(f)(3). The $50 gain on the sale of item *q* from T to S1 is an intercompany transaction on which the gain or loss recognized is deferred pursuant to §1.1502–13(c)(1). The consolidated taxable income of the P affiliated group computed without regard to the consolidated net operating loss deduction is $100.

(iv) As provided by §1.1502–21A(c)(2) of the regulations, the amount of the dual consolidated loss arising in 1989 which may be absorbed by the P affiliated group in 1990 is $100; that is, the consolidated taxable income computed without regard to the consolidated net operating loss deduction minus such consolidated taxable income recomputed by excluding the items of income and deduction of T. Section 1.1502–21A(c) allows $100 of the dual consolidated loss to be included in the consolidated net operating loss deduction for 1990. The consolidated taxable income of the P group for 1990 is $0.

(v) S2 must make the positive adjustment provided for in §1.1502–32(b)(1)(i) to its basis in T for the amount of its allocable part of the undistributed earnings and profits of T for the taxable year. S2 can not make the negative adjustment provided for in §1.1502–32(b)(2)(ii) for the dual consolidated loss of T incurred in 1989 and absorbed in 1990. Thus, as provided in §1.1502–32(e)(2), S2 shall make a net positive adjustment to its basis in T of

$100 and S2's basis in T is now $440. As provided in § 1.1502–33(b)(4)(ii)(a), S2's earnings and profits for 1989 must reflect S2's increase in its basis in T stock for the taxable year. Since S2 has no other earnings and profits for the taxable year, S2 has earnings and profits of $100 for the taxable year. As provided in § 1.1502–32(b)(1)(i), P must make a positive adjustment for the amount of its allocable part of the undistributed earnings and profits of S2 for the taxable year. Thus, P must make a net positive adjustment to its basis in S2 of $100 and P's basis in S2 is now $940.

[T.D. 8261, 54 FR 37317, Sept. 8, 1989. Redesignated by T.D. 8434, 57 FR 41093, Sept. 9, 1992, as amended by T.D. 8677, 61 FR 33325, June 27, 1996; T.D. 8823, 64 FR 36101, July 2, 1999]

§ 1.1504–1.1550 [Reserved]

FINDING AIDS

A list of CFR titles, subtitles, chapters, subchapters and parts and an alphabetical list of agencies publishing in the CFR are included in the CFR Index and Finding Aids volume of the Code of Federal Regulations which is published separately and revised annually.

Table of CFR Titles and Chapters
Alphabetical List of Agencies Appearing in the CFR
Table of OMB Control Numbers
List of CFR Sections Affected

Table of CFR Titles and Chapters

(Revised as of April 1, 2006)

Title 1—General Provisions

I Administrative Committee of the Federal Register (Parts 1—49)

II Office of the Federal Register (Parts 50—299)

IV Miscellaneous Agencies (Parts 400—500)

Title 2—Grants and Agreements

SUBTITLE A—OFFICE OF MANAGEMENT AND BUDGET GUIDANCE FOR GRANTS AND AGREEMENTS

I Office of Management and Budget Governmentwide Guidance for Grants and Agreements (Parts 100-199)

II Office of Management and Budget Circulars and Guidance (200-299)

SUBTITLE B—FEDERAL AGENCY REGULATIONS FOR GRANTS AND AGREEMENTS [RESERVED]

Title 3—The President

I Executive Office of the President (Parts 100—199)

Title 4—Accounts

I Government Accountability Office (Parts 1—99)

Title 5—Administrative Personnel

I Office of Personnel Management (Parts 1—1199)

II Merit Systems Protection Board (Parts 1200—1299)

III Office of Management and Budget (Parts 1300—1399)

V The International Organizations Employees Loyalty Board (Parts 1500—1599)

VI Federal Retirement Thrift Investment Board (Parts 1600—1699)

VIII Office of Special Counsel (Parts 1800—1899)

IX Appalachian Regional Commission (Parts 1900—1999)

XI Armed Forces Retirement Home (Part 2100)

XIV Federal Labor Relations Authority, General Counsel of the Federal Labor Relations Authority and Federal Service Impasses Panel (Parts 2400—2499)

Title 5—Administrative Personnel—Continued

Chap.	
XV	Office of Administration, Executive Office of the President (Parts 2500—2599)
XVI	Office of Government Ethics (Parts 2600—2699)
XXI	Department of the Treasury (Parts 3100—3199)
XXII	Federal Deposit Insurance Corporation (Part 3201)
XXIII	Department of Energy (Part 3301)
XXIV	Federal Energy Regulatory Commission (Part 3401)
XXV	Department of the Interior (Part 3501)
XXVI	Department of Defense (Part 3601)
XXVIII	Department of Justice (Part 3801)
XXIX	Federal Communications Commission (Parts 3900—3999)
XXX	Farm Credit System Insurance Corporation (Parts 4000—4099)
XXXI	Farm Credit Administration (Parts 4100—4199)
XXXIII	Overseas Private Investment Corporation (Part 4301)
XXXV	Office of Personnel Management (Part 4501)
XL	Interstate Commerce Commission (Part 5001)
XLI	Commodity Futures Trading Commission (Part 5101)
XLII	Department of Labor (Part 5201)
XLIII	National Science Foundation (Part 5301)
XLV	Department of Health and Human Services (Part 5501)
XLVI	Postal Rate Commission (Part 5601)
XLVII	Federal Trade Commission (Part 5701)
XLVIII	Nuclear Regulatory Commission (Part 5801)
L	Department of Transportation (Part 6001)
LII	Export-Import Bank of the United States (Part 6201)
LIII	Department of Education (Parts 6300—6399)
LIV	Environmental Protection Agency (Part 6401)
LV	National Endowment for the Arts (Part 6501)
LVI	National Endowment for the Humanities (Part 6601)
LVII	General Services Administration (Part 6701)
LVIII	Board of Governors of the Federal Reserve System (Part 6801)
LIX	National Aeronautics and Space Administration (Part 6901)
LX	United States Postal Service (Part 7001)
LXI	National Labor Relations Board (Part 7101)
LXII	Equal Employment Opportunity Commission (Part 7201)
LXIII	Inter-American Foundation (Part 7301)
LXV	Department of Housing and Urban Development (Part 7501)
LXVI	National Archives and Records Administration (Part 7601)
LXVII	Institute of Museum and Library Services (Part 7701)
LXIX	Tennessee Valley Authority (Part 7901)
LXXI	Consumer Product Safety Commission (Part 8101)
LXXIII	Department of Agriculture (Part 8301)
LXXIV	Federal Mine Safety and Health Review Commission (Part 8401)
LXXVI	Federal Retirement Thrift Investment Board (Part 8601)

Title 5—Administrative Personnel—Continued

Chap.

LXXVII Office of Management and Budget (Part 8701)

XCVII Department of Homeland Security Human Resources Management System (Department of Homeland Security--Office of Personnel Management) (Part 9701)

XCIX Department of Defense Human Resources Management and Labor Relations Systems (Department of Defense--Office of Personnel Management) (Part 9901)

Title 6—Homeland Security

I Department of Homeland Security, Office of the Secretary (Parts 0—99)

Title 7—Agriculture

SUBTITLE A—OFFICE OF THE SECRETARY OF AGRICULTURE (PARTS 0—26)

SUBTITLE B—REGULATIONS OF THE DEPARTMENT OF AGRICULTURE

I Agricultural Marketing Service (Standards, Inspections, Marketing Practices), Department of Agriculture (Parts 27—209)

II Food and Nutrition Service, Department of Agriculture (Parts 210—299)

III Animal and Plant Health Inspection Service, Department of Agriculture (Parts 300—399)

IV Federal Crop Insurance Corporation, Department of Agriculture (Parts 400—499)

V Agricultural Research Service, Department of Agriculture (Parts 500—599)

VI Natural Resources Conservation Service, Department of Agriculture (Parts 600—699)

VII Farm Service Agency, Department of Agriculture (Parts 700—799)

VIII Grain Inspection, Packers and Stockyards Administration (Federal Grain Inspection Service), Department of Agriculture (Parts 800—899)

IX Agricultural Marketing Service (Marketing Agreements and Orders; Fruits, Vegetables, Nuts), Department of Agriculture (Parts 900—999)

X Agricultural Marketing Service (Marketing Agreements and Orders; Milk), Department of Agriculture (Parts 1000—1199)

XI Agricultural Marketing Service (Marketing Agreements and Orders; Miscellaneous Commodities), Department of Agriculture (Parts 1200—1299)

XIV Commodity Credit Corporation, Department of Agriculture (Parts 1400—1499)

XV Foreign Agricultural Service, Department of Agriculture (Parts 1500—1599)

XVI Rural Telephone Bank, Department of Agriculture (Parts 1600—1699)

XVII Rural Utilities Service, Department of Agriculture (Parts 1700—1799)

Title 7—Agriculture—Continued

Chap.	
XVIII	Rural Housing Service, Rural Business-Cooperative Service, Rural Utilities Service, and Farm Service Agency, Department of Agriculture (Parts 1800—2099)
XX	Local Television Loan Guarantee Board (Parts 2200—2299)
XXVI	Office of Inspector General, Department of Agriculture (Parts 2600—2699)
XXVII	Office of Information Resources Management, Department of Agriculture (Parts 2700—2799)
XXVIII	Office of Operations, Department of Agriculture (Parts 2800—2899)
XXIX	Office of Energy Policy and New Uses, Department of Agriculture (Parts 2900—2999)
XXX	Office of the Chief Financial Officer, Department of Agriculture (Parts 3000—3099)
XXXI	Office of Environmental Quality, Department of Agriculture (Parts 3100—3199)
XXXII	Office of Procurement and Property Management, Department of Agriculture (Parts 3200—3299)
XXXIII	Office of Transportation, Department of Agriculture (Parts 3300—3399)
XXXIV	Cooperative State Research, Education, and Extension Service, Department of Agriculture (Parts 3400—3499)
XXXV	Rural Housing Service, Department of Agriculture (Parts 3500—3599)
XXXVI	National Agricultural Statistics Service, Department of Agriculture (Parts 3600—3699)
XXXVII	Economic Research Service, Department of Agriculture (Parts 3700—3799)
XXXVIII	World Agricultural Outlook Board, Department of Agriculture (Parts 3800—3899)
XLI	[Reserved]
XLII	Rural Business-Cooperative Service and Rural Utilities Service, Department of Agriculture (Parts 4200—4299)

Title 8—Aliens and Nationality

I	Department of Homeland Security (Immigration and Naturalization) (Parts 1—499)
V	Executive Office for Immigration Review, Department of Justice (Parts 1000—1399)

Title 9—Animals and Animal Products

I	Animal and Plant Health Inspection Service, Department of Agriculture (Parts 1—199)
II	Grain Inspection, Packers and Stockyards Administration (Packers and Stockyards Programs), Department of Agriculture (Parts 200—299)
III	Food Safety and Inspection Service, Department of Agriculture (Parts 300—599)

Title 10—Energy

Chap.

I Nuclear Regulatory Commission (Parts 0—199)

II Department of Energy (Parts 200—699)

III Department of Energy (Parts 700—999)

X Department of Energy (General Provisions) (Parts 1000—1099)

XIII Nuclear Waste Technical Review Board (Parts 1303—1399)

XVII Defense Nuclear Facilities Safety Board (Parts 1700—1799)

XVIII Northeast Interstate Low-Level Radioactive Waste Commission (Part 1800)

Title 11—Federal Elections

I Federal Election Commission (Parts 1—9099)

Title 12—Banks and Banking

I Comptroller of the Currency, Department of the Treasury (Parts 1—199)

II Federal Reserve System (Parts 200—299)

III Federal Deposit Insurance Corporation (Parts 300—399)

IV Export-Import Bank of the United States (Parts 400—499)

V Office of Thrift Supervision, Department of the Treasury (Parts 500—599)

VI Farm Credit Administration (Parts 600—699)

VII National Credit Union Administration (Parts 700—799)

VIII Federal Financing Bank (Parts 800—899)

IX Federal Housing Finance Board (Parts 900—999)

XI Federal Financial Institutions Examination Council (Parts 1100—1199)

XIV Farm Credit System Insurance Corporation (Parts 1400—1499)

XV Department of the Treasury (Parts 1500—1599)

XVII Office of Federal Housing Enterprise Oversight, Department of Housing and Urban Development (Parts 1700—1799)

XVIII Community Development Financial Institutions Fund, Department of the Treasury (Parts 1800—1899)

Title 13—Business Credit and Assistance

I Small Business Administration (Parts 1—199)

III Economic Development Administration, Department of Commerce (Parts 300—399)

IV Emergency Steel Guarantee Loan Board, Department of Commerce (Parts 400—499)

V Emergency Oil and Gas Guaranteed Loan Board, Department of Commerce (Parts 500—599)

Title 14—Aeronautics and Space

Chap.

I Federal Aviation Administration, Department of Transportation (Parts 1—199)

II Office of the Secretary, Department of Transportation (Aviation Proceedings) (Parts 200—399)

III Commercial Space Transportation, Federal Aviation Administration, Department of Transportation (Parts 400—499)

V National Aeronautics and Space Administration (Parts 1200—1299)

VI Air Transportation System Stabilization (Parts 1300—1399)

Title 15—Commerce and Foreign Trade

SUBTITLE A—OFFICE OF THE SECRETARY OF COMMERCE (PARTS 0—29)

SUBTITLE B—REGULATIONS RELATING TO COMMERCE AND FOREIGN TRADE

I Bureau of the Census, Department of Commerce (Parts 30—199)

II National Institute of Standards and Technology, Department of Commerce (Parts 200—299)

III International Trade Administration, Department of Commerce (Parts 300—399)

IV Foreign-Trade Zones Board, Department of Commerce (Parts 400—499)

VII Bureau of Industry and Security, Department of Commerce (Parts 700—799)

VIII Bureau of Economic Analysis, Department of Commerce (Parts 800—899)

IX National Oceanic and Atmospheric Administration, Department of Commerce (Parts 900—999)

XI Technology Administration, Department of Commerce (Parts 1100—1199)

XIII East-West Foreign Trade Board (Parts 1300—1399)

XIV Minority Business Development Agency (Parts 1400—1499)

SUBTITLE C—REGULATIONS RELATING TO FOREIGN TRADE AGREEMENTS

XX Office of the United States Trade Representative (Parts 2000—2099)

SUBTITLE D—REGULATIONS RELATING TO TELECOMMUNICATIONS AND INFORMATION

XXIII National Telecommunications and Information Administration, Department of Commerce (Parts 2300—2399)

Title 16—Commercial Practices

I Federal Trade Commission (Parts 0—999)

II Consumer Product Safety Commission (Parts 1000—1799)

Title 17—Commodity and Securities Exchanges

Chap.

I Commodity Futures Trading Commission (Parts 1—199)

II Securities and Exchange Commission (Parts 200—399)

IV Department of the Treasury (Parts 400—499)

Title 18—Conservation of Power and Water Resources

I Federal Energy Regulatory Commission, Department of Energy (Parts 1—399)

III Delaware River Basin Commission (Parts 400—499)

VI Water Resources Council (Parts 700—799)

VIII Susquehanna River Basin Commission (Parts 800—899)

XIII Tennessee Valley Authority (Parts 1300—1399)

Title 19—Customs Duties

I Bureau of Customs and Border Protection, Department of Homeland Security; Department of the Treasury (Parts 0—199)

II United States International Trade Commission (Parts 200—299)

III International Trade Administration, Department of Commerce (Parts 300—399)

IV Bureau of Immigration and Customs Enforcement, Department of Homeland Security (Parts 400—599)

Title 20—Employees' Benefits

I Office of Workers' Compensation Programs, Department of Labor (Parts 1—199)

II Railroad Retirement Board (Parts 200—399)

III Social Security Administration (Parts 400—499)

IV Employees Compensation Appeals Board, Department of Labor (Parts 500—599)

V Employment and Training Administration, Department of Labor (Parts 600—699)

VI Employment Standards Administration, Department of Labor (Parts 700—799)

VII Benefits Review Board, Department of Labor (Parts 800—899)

VIII Joint Board for the Enrollment of Actuaries (Parts 900—999)

IX Office of the Assistant Secretary for Veterans' Employment and Training, Department of Labor (Parts 1000—1099)

Title 21—Food and Drugs

I Food and Drug Administration, Department of Health and Human Services (Parts 1—1299)

II Drug Enforcement Administration, Department of Justice (Parts 1300—1399)

III Office of National Drug Control Policy (Parts 1400—1499)

Title 22—Foreign Relations

Chap.

I Department of State (Parts 1—199)

II Agency for International Development (Parts 200—299)

III Peace Corps (Parts 300—399)

IV International Joint Commission, United States and Canada (Parts 400—499)

V Broadcasting Board of Governors (Parts 500—599)

VII Overseas Private Investment Corporation (Parts 700—799)

IX Foreign Service Grievance Board Regulations (Parts 900—999)

X Inter-American Foundation (Parts 1000—1099)

XI International Boundary and Water Commission, United States and Mexico, United States Section (Parts 1100—1199)

XII United States International Development Cooperation Agency (Parts 1200—1299)

XIV Foreign Service Labor Relations Board; Federal Labor Relations Authority; General Counsel of the Federal Labor Relations Authority; and the Foreign Service Impasse Disputes Panel (Parts 1400—1499)

XV African Development Foundation (Parts 1500—1599)

XVI Japan-United States Friendship Commission (Parts 1600—1699)

XVII United States Institute of Peace (Parts 1700—1799)

Title 23—Highways

I Federal Highway Administration, Department of Transportation (Parts 1—999)

II National Highway Traffic Safety Administration and Federal Highway Administration, Department of Transportation (Parts 1200—1299)

III National Highway Traffic Safety Administration, Department of Transportation (Parts 1300—1399)

Title 24—Housing and Urban Development

SUBTITLE A—OFFICE OF THE SECRETARY, DEPARTMENT OF HOUSING AND URBAN DEVELOPMENT (PARTS 0—99)

SUBTITLE B—REGULATIONS RELATING TO HOUSING AND URBAN DEVELOPMENT

I Office of Assistant Secretary for Equal Opportunity, Department of Housing and Urban Development (Parts 100—199)

II Office of Assistant Secretary for Housing-Federal Housing Commissioner, Department of Housing and Urban Development (Parts 200—299)

III Government National Mortgage Association, Department of Housing and Urban Development (Parts 300—399)

IV Office of Housing and Office of Multifamily Housing Assistance Restructuring, Department of Housing and Urban Development (Parts 400—499)

V Office of Assistant Secretary for Community Planning and Development, Department of Housing and Urban Development (Parts 500—599)

Title 24—Housing and Urban Development—Continued

Chap.

VI Office of Assistant Secretary for Community Planning and Development, Department of Housing and Urban Development (Parts 600—699) [Reserved]

VII Office of the Secretary, Department of Housing and Urban Development (Housing Assistance Programs and Public and Indian Housing Programs) (Parts 700—799)

VIII Office of the Assistant Secretary for Housing—Federal Housing Commissioner, Department of Housing and Urban Development (Section 8 Housing Assistance Programs, Section 202 Direct Loan Program, Section 202 Supportive Housing for the Elderly Program and Section 811 Supportive Housing for Persons With Disabilities Program) (Parts 800—899)

IX Office of Assistant Secretary for Public and Indian Housing, Department of Housing and Urban Development (Parts 900—1699)

X Office of Assistant Secretary for Housing—Federal Housing Commissioner, Department of Housing and Urban Development (Interstate Land Sales Registration Program) (Parts 1700—1799)

XII Office of Inspector General, Department of Housing and Urban Development (Parts 2000—2099)

XX Office of Assistant Secretary for Housing—Federal Housing Commissioner, Department of Housing and Urban Development (Parts 3200—3899)

XXV Neighborhood Reinvestment Corporation (Parts 4100—4199)

Title 25—Indians

I Bureau of Indian Affairs, Department of the Interior (Parts 1—299)

II Indian Arts and Crafts Board, Department of the Interior (Parts 300—399)

III National Indian Gaming Commission, Department of the Interior (Parts 500—599)

IV Office of Navajo and Hopi Indian Relocation (Parts 700—799)

V Bureau of Indian Affairs, Department of the Interior, and Indian Health Service, Department of Health and Human Services (Part 900)

VI Office of the Assistant Secretary-Indian Affairs, Department of the Interior (Parts 1000—1199)

VII Office of the Special Trustee for American Indians, Department of the Interior (Part 1200)

Title 26—Internal Revenue

I Internal Revenue Service, Department of the Treasury (Parts 1—899)

Title 27—Alcohol, Tobacco Products and Firearms

I Alcohol and Tobacco Tax and Trade Bureau, Department of the Treasury (Parts 1—399)

Title 27—Alcohol, Tobacco Products and Firearms—Continued

Chap.

II Bureau of Alcohol, Tobacco, Firearms, and Explosives, Department of Justice (Parts 400—699)

Title 28—Judicial Administration

I Department of Justice (Parts 0—299)

III Federal Prison Industries, Inc., Department of Justice (Parts 300—399)

V Bureau of Prisons, Department of Justice (Parts 500—599)

VI Offices of Independent Counsel, Department of Justice (Parts 600—699)

VII Office of Independent Counsel (Parts 700—799)

VIII Court Services and Offender Supervision Agency for the District of Columbia (Parts 800—899)

IX National Crime Prevention and Privacy Compact Council (Parts 900—999)

XI Department of Justice and Department of State (Parts 1100—1199)

Title 29—Labor

SUBTITLE A—OFFICE OF THE SECRETARY OF LABOR (PARTS 0—99)

SUBTITLE B—REGULATIONS RELATING TO LABOR

I National Labor Relations Board (Parts 100—199)

II Office of Labor-Management Standards, Department of Labor (Parts 200—299)

III National Railroad Adjustment Board (Parts 300—399)

IV Office of Labor-Management Standards, Department of Labor (Parts 400—499)

V Wage and Hour Division, Department of Labor (Parts 500—899)

IX Construction Industry Collective Bargaining Commission (Parts 900—999)

X National Mediation Board (Parts 1200—1299)

XII Federal Mediation and Conciliation Service (Parts 1400—1499)

XIV Equal Employment Opportunity Commission (Parts 1600—1699)

XVII Occupational Safety and Health Administration, Department of Labor (Parts 1900—1999)

XX Occupational Safety and Health Review Commission (Parts 2200—2499)

XXV Employee Benefits Security Administration, Department of Labor (Parts 2500—2599)

XXVII Federal Mine Safety and Health Review Commission (Parts 2700—2799)

XL Pension Benefit Guaranty Corporation (Parts 4000—4999)

Title 30—Mineral Resources

Chap.

I Mine Safety and Health Administration, Department of Labor (Parts 1—199)

II Minerals Management Service, Department of the Interior (Parts 200—299)

III Board of Surface Mining and Reclamation Appeals, Department of the Interior (Parts 300—399)

IV Geological Survey, Department of the Interior (Parts 400—499)

VII Office of Surface Mining Reclamation and Enforcement, Department of the Interior (Parts 700—999)

Title 31—Money and Finance: Treasury

SUBTITLE A—OFFICE OF THE SECRETARY OF THE TREASURY (PARTS 0—50)

SUBTITLE B—REGULATIONS RELATING TO MONEY AND FINANCE

I Monetary Offices, Department of the Treasury (Parts 51—199)

II Fiscal Service, Department of the Treasury (Parts 200—399)

IV Secret Service, Department of the Treasury (Parts 400—499)

V Office of Foreign Assets Control, Department of the Treasury (Parts 500—599)

VI Bureau of Engraving and Printing, Department of the Treasury (Parts 600—699)

VII Federal Law Enforcement Training Center, Department of the Treasury (Parts 700—799)

VIII Office of International Investment, Department of the Treasury (Parts 800—899)

IX Federal Claims Collection Standards (Department of the Treasury—Department of Justice) (Parts 900—999)

Title 32—National Defense

SUBTITLE A—DEPARTMENT OF DEFENSE

I Office of the Secretary of Defense (Parts 1—399)

V Department of the Army (Parts 400—699)

VI Department of the Navy (Parts 700—799)

VII Department of the Air Force (Parts 800—1099)

SUBTITLE B—OTHER REGULATIONS RELATING TO NATIONAL DEFENSE

XII Defense Logistics Agency (Parts 1200—1299)

XVI Selective Service System (Parts 1600—1699)

XVIII National Counterintelligence Center (Parts 1800—1899)

XIX Central Intelligence Agency (Parts 1900—1999)

XX Information Security Oversight Office, National Archives and Records Administration (Parts 2000—2099)

XXI National Security Council (Parts 2100—2199)

XXIV Office of Science and Technology Policy (Parts 2400—2499)

XXVII Office for Micronesian Status Negotiations (Parts 2700—2799)

Title 32—National Defense—Continued

Chap.

XXVIII Office of the Vice President of the United States (Parts 2800—2899)

Title 33—Navigation and Navigable Waters

I Coast Guard, Department of Homeland Security (Parts 1—199)

II Corps of Engineers, Department of the Army (Parts 200—399)

IV Saint Lawrence Seaway Development Corporation, Department of Transportation (Parts 400—499)

Title 34—Education

SUBTITLE A—OFFICE OF THE SECRETARY, DEPARTMENT OF EDUCATION (PARTS 1—99)

SUBTITLE B—REGULATIONS OF THE OFFICES OF THE DEPARTMENT OF EDUCATION

I Office for Civil Rights, Department of Education (Parts 100—199)

II Office of Elementary and Secondary Education, Department of Education (Parts 200—299)

III Office of Special Education and Rehabilitative Services, Department of Education (Parts 300—399)

IV Office of Vocational and Adult Education, Department of Education (Parts 400—499)

V Office of Bilingual Education and Minority Languages Affairs, Department of Education (Parts 500—599)

VI Office of Postsecondary Education, Department of Education (Parts 600—699)

XI National Institute for Literacy (Parts 1100—1199)

SUBTITLE C—REGULATIONS RELATING TO EDUCATION

XII National Council on Disability (Parts 1200—1299)

Title 35 [Reserved]

Title 36—Parks, Forests, and Public Property

I National Park Service, Department of the Interior (Parts 1—199)

II Forest Service, Department of Agriculture (Parts 200—299)

III Corps of Engineers, Department of the Army (Parts 300—399)

IV American Battle Monuments Commission (Parts 400—499)

V Smithsonian Institution (Parts 500—599)

VII Library of Congress (Parts 700—799)

VIII Advisory Council on Historic Preservation (Parts 800—899)

IX Pennsylvania Avenue Development Corporation (Parts 900—999)

X Presidio Trust (Parts 1000—1099)

XI Architectural and Transportation Barriers Compliance Board (Parts 1100—1199)

XII National Archives and Records Administration (Parts 1200—1299)

XV Oklahoma City National Memorial Trust (Part 1501)

Title 36—Parks, Forests, and Public Property—Continued

Chap.

XVI Morris K. Udall Scholarship and Excellence in National Environmental Policy Foundation (Parts 1600—1699)

Title 37—Patents, Trademarks, and Copyrights

I United States Patent and Trademark Office, Department of Commerce (Parts 1—199)

II Copyright Office, Library of Congress (Parts 200—299)

III Copyright Royalty Board, Library of Congress (Parts 301—399)

IV Assistant Secretary for Technology Policy, Department of Commerce (Parts 400—499)

V Under Secretary for Technology, Department of Commerce (Parts 500—599)

Title 38—Pensions, Bonuses, and Veterans' Relief

I Department of Veterans Affairs (Parts 0—99)

Title 39—Postal Service

I United States Postal Service (Parts 1—999)

III Postal Rate Commission (Parts 3000—3099)

Title 40—Protection of Environment

I Environmental Protection Agency (Parts 1—1099)

IV Environmental Protection Agency and Department of Justice (Parts 1400—1499)

V Council on Environmental Quality (Parts 1500—1599)

VI Chemical Safety and Hazard Investigation Board (Parts 1600—1699)

VII Environmental Protection Agency and Department of Defense; Uniform National Discharge Standards for Vessels of the Armed Forces (Parts 1700—1799)

Title 41—Public Contracts and Property Management

SUBTITLE B—OTHER PROVISIONS RELATING TO PUBLIC CONTRACTS

50 Public Contracts, Department of Labor (Parts 50–1—50–999)

51 Committee for Purchase From People Who Are Blind or Severely Disabled (Parts 51–1—51–99)

60 Office of Federal Contract Compliance Programs, Equal Employment Opportunity, Department of Labor (Parts 60–1—60–999)

61 Office of the Assistant Secretary for Veterans' Employment and Training Service, Department of Labor (Parts 61–1—61–999)

SUBTITLE C—FEDERAL PROPERTY MANAGEMENT REGULATIONS SYSTEM

101 Federal Property Management Regulations (Parts 101–1—101–99)

102 Federal Management Regulation (Parts 102–1—102–299)

Chap.

105 General Services Administration (Parts 105–1—105–999)

109 Department of Energy Property Management Regulations (Parts 109–1—109–99)

114 Department of the Interior (Parts 114–1—114–99)

115 Environmental Protection Agency (Parts 115–1—115–99)

128 Department of Justice (Parts 128–1—128–99)

SUBTITLE D—OTHER PROVISIONS RELATING TO PROPERTY MANAGEMENT [RESERVED]

SUBTITLE E—FEDERAL INFORMATION RESOURCES MANAGEMENT REGULATIONS SYSTEM

201 Federal Information Resources Management Regulation (Parts 201–1—201–99) [Reserved]

SUBTITLE F—FEDERAL TRAVEL REGULATION SYSTEM

300 General (Parts 300–1—300–99)

301 Temporary Duty (TDY) Travel Allowances (Parts 301–1—301–99)

302 Relocation Allowances (Parts 302–1—302–99)

303 Payment of Expenses Connected with the Death of Certain Employees (Part 303–1—303–99)

304 Payment of Travel Expenses from a Non-Federal Source (Parts 304–1—304–99)

Title 42—Public Health

I Public Health Service, Department of Health and Human Services (Parts 1—199)

IV Centers for Medicare & Medicaid Services, Department of Health and Human Services (Parts 400—499)

V Office of Inspector General-Health Care, Department of Health and Human Services (Parts 1000—1999)

Title 43—Public Lands: Interior

SUBTITLE A—OFFICE OF THE SECRETARY OF THE INTERIOR (PARTS 1—199)

SUBTITLE B—REGULATIONS RELATING TO PUBLIC LANDS

I Bureau of Reclamation, Department of the Interior (Parts 200—499)

II Bureau of Land Management, Department of the Interior (Parts 1000—9999)

III Utah Reclamation Mitigation and Conservation Commission (Parts 10000—10010)

Title 44—Emergency Management and Assistance

I Federal Emergency Management Agency, Department of Homeland Security (Parts 0—399)

IV Department of Commerce and Department of Transportation (Parts 400—499)

Title 45—Public Welfare

Chap.

SUBTITLE A—DEPARTMENT OF HEALTH AND HUMAN SERVICES (PARTS 1—199)

SUBTITLE B—REGULATIONS RELATING TO PUBLIC WELFARE

II Office of Family Assistance (Assistance Programs), Administration for Children and Families, Department of Health and Human Services (Parts 200—299)

III Office of Child Support Enforcement (Child Support Enforcement Program), Administration for Children and Families, Department of Health and Human Services (Parts 300—399)

IV Office of Refugee Resettlement, Administration for Children and Families, Department of Health and Human Services (Parts 400—499)

V Foreign Claims Settlement Commission of the United States, Department of Justice (Parts 500—599)

VI National Science Foundation (Parts 600—699)

VII Commission on Civil Rights (Parts 700—799)

VIII Office of Personnel Management (Parts 800—899)

X Office of Community Services, Administration for Children and Families, Department of Health and Human Services (Parts 1000—1099)

XI National Foundation on the Arts and the Humanities (Parts 1100—1199)

XII Corporation for National and Community Service (Parts 1200—1299)

XIII Office of Human Development Services, Department of Health and Human Services (Parts 1300—1399)

XVI Legal Services Corporation (Parts 1600—1699)

XVII National Commission on Libraries and Information Science (Parts 1700—1799)

XVIII Harry S. Truman Scholarship Foundation (Parts 1800—1899)

XXI Commission on Fine Arts (Parts 2100—2199)

XXIII Arctic Research Commission (Part 2301)

XXIV James Madison Memorial Fellowship Foundation (Parts 2400—2499)

XXV Corporation for National and Community Service (Parts 2500—2599)

Title 46—Shipping

I Coast Guard, Department of Homeland Security (Parts 1—199)

II Maritime Administration, Department of Transportation (Parts 200—399)

III Coast Guard (Great Lakes Pilotage), Department of Homeland Security (Parts 400—499)

IV Federal Maritime Commission (Parts 500—599)

Title 47—Telecommunication

I Federal Communications Commission (Parts 0—199)

Title 47—Telecommunication—Continued

Chap.

II Office of Science and Technology Policy and National Security Council (Parts 200—299)

III National Telecommunications and Information Administration, Department of Commerce (Parts 300—399)

Title 48—Federal Acquisition Regulations System

1 Federal Acquisition Regulation (Parts 1—99)

2 Defense Acquisition Regulations System, Department of Defense (Parts 200—299)

3 Department of Health and Human Services (Parts 300—399)

4 Department of Agriculture (Parts 400—499)

5 General Services Administration (Parts 500—599)

6 Department of State (Parts 600—699)

7 United States Agency for International Development (Parts 700—799)

8 Department of Veterans Affairs (Parts 800—899)

9 Department of Energy (Parts 900—999)

10 Department of the Treasury (Parts 1000—1099)

12 Department of Transportation (Parts 1200—1299)

13 Department of Commerce (Parts 1300—1399)

14 Department of the Interior (Parts 1400—1499)

15 Environmental Protection Agency (Parts 1500—1599)

16 Office of Personnel Management, Federal Employees Health Benefits Acquisition Regulation (Parts 1600—1699)

17 Office of Personnel Management (Parts 1700—1799)

18 National Aeronautics and Space Administration (Parts 1800—1899)

19 Broadcasting Board of Governors (Parts 1900—1999)

20 Nuclear Regulatory Commission (Parts 2000—2099)

21 Office of Personnel Management, Federal Employees' Group Life Insurance Federal Acquisition Regulation (Parts 2100—2199)

23 Social Security Administration (Parts 2300—2399)

24 Department of Housing and Urban Development (Parts 2400—2499)

25 National Science Foundation (Parts 2500—2599)

28 Department of Justice (Parts 2800—2899)

29 Department of Labor (Parts 2900—2999)

30 Department of Homeland Security, Homeland Security Acquisition Regulation (HSAR) (Parts 3000—3099)

34 Department of Education Acquisition Regulation (Parts 3400—3499)

35 [Reserved]

44 Federal Emergency Management Agency (Parts 4400—4499)

51 Department of the Army Acquisition Regulations (Parts 5100—5199)

Chap.

52 Department of the Navy Acquisition Regulations (Parts 5200—5299)

53 Department of the Air Force Federal Acquisition Regulation Supplement (Parts 5300—5399)

54 Defense Logistics Agency, Department of Defense (Parts 5400—5499)

57 African Development Foundation (Parts 5700—5799)

61 General Services Administration Board of Contract Appeals (Parts 6100—6199)

63 Department of Transportation Board of Contract Appeals (Parts 6300—6399)

99 Cost Accounting Standards Board, Office of Federal Procurement Policy, Office of Management and Budget (Parts 9900—9999)

Title 49—Transportation

SUBTITLE A—OFFICE OF THE SECRETARY OF TRANSPORTATION (PARTS 1—99)

SUBTITLE B—OTHER REGULATIONS RELATING TO TRANSPORTATION

I Pipeline and Hazardous Materials Safety Administration, Department of Transportation (Parts 100—199)

II Federal Railroad Administration, Department of Transportation (Parts 200—299)

III Federal Motor Carrier Safety Administration, Department of Transportation (Parts 300—399)

IV Coast Guard, Department of Homeland Security (Parts 400—499)

V National Highway Traffic Safety Administration, Department of Transportation (Parts 500—599)

VI Federal Transit Administration, Department of Transportation (Parts 600—699)

VII National Railroad Passenger Corporation (AMTRAK) (Parts 700—799)

VIII National Transportation Safety Board (Parts 800—999)

X Surface Transportation Board, Department of Transportation (Parts 1000—1399)

XI Research and Innovative Technology Administration, Department of Transportation (Parts 1400—1499)

XII Transportation Security Administration, Department of Homeland Security (Parts 1500—1699)

Title 50—Wildlife and Fisheries

I United States Fish and Wildlife Service, Department of the Interior (Parts 1—199)

II National Marine Fisheries Service, National Oceanic and Atmospheric Administration, Department of Commerce (Parts 200—299)

III International Fishing and Related Activities (Parts 300—399)

Title 50—Wildlife and Fisheries—Continued

Chap.

IV Joint Regulations (United States Fish and Wildlife Service, Department of the Interior and National Marine Fisheries Service, National Oceanic and Atmospheric Administration, Department of Commerce); Endangered Species Committee Regulations (Parts 400—499)

V Marine Mammal Commission (Parts 500—599)

VI Fishery Conservation and Management, National Oceanic and Atmospheric Administration, Department of Commerce (Parts 600—699)

CFR Index and Finding Aids

Subject/Agency Index

List of Agency Prepared Indexes

Parallel Tables of Statutory Authorities and Rules

List of CFR Titles, Chapters, Subchapters, and Parts

Alphabetical List of Agencies Appearing in the CFR

Alphabetical List of Agencies Appearing in the CFR

(Revised as of April 1, 2006)

Agency	CFR Title, Subtitle or Chapter
Administrative Committee of the Federal Register	1, I
Advanced Research Projects Agency	32, I
Advisory Council on Historic Preservation	36, VIII
African Development Foundation	22, XV
Federal Acquisition Regulation	48, 57
Agency for International Development, United States	22, II
Federal Acquisition Regulation	48, 7
Agricultural Marketing Service	7, I, IX, X, XI
Agricultural Research Service	7, V
Agriculture Department	5, LXXIII
Agricultural Marketing Service	7, I, IX, X, XI
Agricultural Research Service	7, V
Animal and Plant Health Inspection Service	7, III; 9, I
Chief Financial Officer, Office of	7, XXX
Commodity Credit Corporation	7, XIV
Cooperative State Research, Education, and Extension Service	7, XXXIV
Economic Research Service	7, XXXVII
Energy, Office of	7, XXIX
Environmental Quality, Office of	7, XXXI
Farm Service Agency	7, VII, XVIII
Federal Acquisition Regulation	48, 4
Federal Crop Insurance Corporation	7, IV
Food and Nutrition Service	7, II
Food Safety and Inspection Service	9, III
Foreign Agricultural Service	7, XV
Forest Service	36, II
Grain Inspection, Packers and Stockyards Administration	7, VIII; 9, II
Information Resources Management, Office of	7, XXVII
Inspector General, Office of	7, XXVI
National Agricultural Library	7, XLI
National Agricultural Statistics Service	7, XXXVI
Natural Resources Conservation Service	7, VI
Operations, Office of	7, XXVIII
Procurement and Property Management, Office of	7, XXXII
Rural Business-Cooperative Service	7, XVIII, XLII
Rural Development Administration	7, XLII
Rural Housing Service	7, XVIII, XXXV
Rural Telephone Bank	7, XVI
Rural Utilities Service	7, XVII, XVIII, XLII
Secretary of Agriculture, Office of	7, Subtitle A
Transportation, Office of	7, XXXIII
World Agricultural Outlook Board	7, XXXVIII
Air Force Department	32, VII
Federal Acquisition Regulation Supplement	48, 53
Air Transportation Stabilization Board	14, VI
Alcohol and Tobacco Tax and Trade Bureau	27, I
Alcohol, Tobacco, Firearms, and Explosives, Bureau of	27, II
AMTRAK	49, VII
American Battle Monuments Commission	36, IV
American Indians, Office of the Special Trustee	25, VII
Animal and Plant Health Inspection Service	7, III; 9, I
Appalachian Regional Commission	5, IX

Agency	CFR Title, Subtitle or Chapter
Architectural and Transportation Barriers Compliance Board	36, XI
Arctic Research Commission	45, XXIII
Armed Forces Retirement Home	5, XI
Army Department	32, V
Engineers, Corps of	33, II; 36, III
Federal Acquisition Regulation	48, 51
Benefits Review Board	20, VII
Bilingual Education and Minority Languages Affairs, Office of	34, V
Blind or Severely Disabled, Committee for Purchase From People Who Are	41, 51
Broadcasting Board of Governors	22, V
Federal Acquisition Regulation	48, 19
Census Bureau	15, I
Centers for Medicare & Medicaid Services	42, IV
Central Intelligence Agency	32, XIX
Chief Financial Officer, Office of	7, XXX
Child Support Enforcement, Office of	45, III
Children and Families, Administration for	45, II, III, IV, X
Civil Rights, Commission on	45, VII
Civil Rights, Office for	34, I
Coast Guard	33, I; 46, I; 49, IV
Coast Guard (Great Lakes Pilotage)	46, III
Commerce Department	44, IV
Census Bureau	15, I
Economic Affairs, Under Secretary	37, V
Economic Analysis, Bureau of	15, VIII
Economic Development Administration	13, III
Emergency Management and Assistance	44, IV
Federal Acquisition Regulation	48, 13
Fishery Conservation and Management	50, VI
Foreign-Trade Zones Board	15, IV
Industry and Security, Bureau of	15, VII
International Trade Administration	15, III; 19, III
National Institute of Standards and Technology	15, II
National Marine Fisheries Service	50, II, IV, VI
National Oceanic and Atmospheric Administration	15, IX; 50, II, III, IV, VI
National Telecommunications and Information Administration	15, XXIII; 47, III
National Weather Service	15, IX
Patent and Trademark Office, United States	37, I
Productivity, Technology and Innovation, Assistant Secretary for	37, IV
Secretary of Commerce, Office of	15, Subtitle A
Technology, Under Secretary for	37, V
Technology Administration	15, XI
Technology Policy, Assistant Secretary for	37, IV
Commercial Space Transportation	14, III
Commodity Credit Corporation	7, XIV
Commodity Futures Trading Commission	5, XLI; 17, I
Community Planning and Development, Office of Assistant Secretary for	24, V, VI
Community Services, Office of	45, X
Comptroller of the Currency	12, I
Construction Industry Collective Bargaining Commission	29, IX
Consumer Product Safety Commission	5, LXXI; 16, II
Cooperative State Research, Education, and Extension Service	7, XXXIV
Copyright Office	37, II
Copyright Royalty Board	37, III
Corporation for National and Community Service	45, XII, XXV
Cost Accounting Standards Board	48, 99
Council on Environmental Quality	40, V
Court Services and Offender Supervision Agency for the District of Columbia	28, VIII
Customs and Border Protection Bureau	19, I
Defense Contract Audit Agency	32, I
Defense Department	5, XXVI; 32, Subtitle A; 40, VII

Agency	CFR Title, Subtitle or Chapter
Advanced Research Projects Agency	32, I
Air Force Department	32, VII
Army Department	32, V; 33, II; 36, III, 48, 51
Defense Acquisition Regulations System	48, II
Defense Intelligence Agency	32, I
Defense Logistics Agency	32, I, XII; 48, 54
Engineers, Corps of	33, II; 36, III
National Imagery and Mapping Agency	32, I
Navy Department	32, VI; 48, 52
Secretary of Defense, Office of	32, I
Defense Contract Audit Agency	32, I
Defense Intelligence Agency	32, I
Defense Logistics Agency	32, XII; 48, 54
Defense Nuclear Facilities Safety Board	10, XVII
Delaware River Basin Commission	18, III
District of Columbia, Court Services and Offender Supervision Agency for the	28, VIII
Drug Enforcement Administration	21, II
East-West Foreign Trade Board	15, XIII
Economic Affairs, Under Secretary	37, V
Economic Analysis, Bureau of	15, VIII
Economic Development Administration	13, III
Economic Research Service	7, XXXVII
Education, Department of	5, LIII
Bilingual Education and Minority Languages Affairs, Office of	34, V
Civil Rights, Office for	34, I
Educational Research and Improvement, Office of	34, VII
Elementary and Secondary Education, Office of	34, II
Federal Acquisition Regulation	48, 34
Postsecondary Education, Office of	34, VI
Secretary of Education, Office of	34, Subtitle A
Special Education and Rehabilitative Services, Office of	34, III
Vocational and Adult Education, Office of	34, IV
Educational Research and Improvement, Office of	34, VII
Elementary and Secondary Education, Office of	34, II
Emergency Oil and Gas Guaranteed Loan Board	13, V
Emergency Steel Guarantee Loan Board	13, IV
Employee Benefits Security Administration	29, XXV
Employees' Compensation Appeals Board	20, IV
Employees Loyalty Board	5, V
Employment and Training Administration	20, V
Employment Standards Administration	20, VI
Endangered Species Committee	50, IV
Energy, Department of	5, XXIII; 10, II, III, X
Federal Acquisition Regulation	48, 9
Federal Energy Regulatory Commission	5, XXIV; 18, I
Property Management Regulations	41, 109
Energy, Office of	7, XXIX
Engineers, Corps of	33, II; 36, III
Engraving and Printing, Bureau of	31, VI
Environmental Protection Agency	5, LIV; 40, I, IV, VII
Federal Acquisition Regulation	48, 15
Property Management Regulations	41, 115
Environmental Quality, Office of	7, XXXI
Equal Employment Opportunity Commission	5, LXII; 29, XIV
Equal Opportunity, Office of Assistant Secretary for	24, I
Executive Office of the President	3, I
Administration, Office of	5, XV
Environmental Quality, Council on	40, V
Management and Budget, Office of	5, III, LXXVII; 14, VI; 48, 99
National Drug Control Policy, Office of	21, III
National Security Council	32, XXI; 47, 2
Presidential Documents	3
Science and Technology Policy, Office of	32, XXIV; 47, II

Agency	CFR Title, Subtitle or Chapter
Trade Representative, Office of the United States	15, XX
Export-Import Bank of the United States	5, LII; 12, IV
Family Assistance, Office of	45, II
Farm Credit Administration	5, XXXI; 12, VI
Farm Credit System Insurance Corporation	5, XXX; 12, XIV
Farm Service Agency	7, VII, XVIII
Federal Acquisition Regulation	48, 1
Federal Aviation Administration	14, I
Commercial Space Transportation	14, III
Federal Claims Collection Standards	31, IX
Federal Communications Commission	5, XXIX; 47, I
Federal Contract Compliance Programs, Office of	41, 60
Federal Crop Insurance Corporation	7, IV
Federal Deposit Insurance Corporation	5, XXII; 12, III
Federal Election Commission	11, I
Federal Emergency Management Agency	44, I
Federal Acquisition Regulation	48, 44
Federal Employees Group Life Insurance Federal Acquisition Regulation	48, 21
Federal Employees Health Benefits Acquisition Regulation	48, 16
Federal Energy Regulatory Commission	5, XXIV; 18, I
Federal Financial Institutions Examination Council	12, XI
Federal Financing Bank	12, VIII
Federal Highway Administration	23, I, II
Federal Home Loan Mortgage Corporation	1, IV
Federal Housing Enterprise Oversight Office	12, XVII
Federal Housing Finance Board	12, IX
Federal Labor Relations Authority, and General Counsel of the Federal Labor Relations Authority	5, XIV; 22, XIV
Federal Law Enforcement Training Center	31, VII
Federal Management Regulation	41, 102
Federal Maritime Commission	46, IV
Federal Mediation and Conciliation Service	29, XII
Federal Mine Safety and Health Review Commission	5, LXXIV; 29, XXVII
Federal Motor Carrier Safety Administration	49, III
Federal Prison Industries, Inc.	28, III
Federal Procurement Policy Office	48, 99
Federal Property Management Regulations	41, 101
Federal Railroad Administration	49, II
Federal Register, Administrative Committee of	1, I
Federal Register, Office of	1, II
Federal Reserve System	12, II
Board of Governors	5, LVIII
Federal Retirement Thrift Investment Board	5, VI, LXXVI
Federal Service Impasses Panel	5, XIV
Federal Trade Commission	5, XLVII; 16, I
Federal Transit Administration	49, VI
Federal Travel Regulation System	41, Subtitle F
Fine Arts, Commission on	45, XXI
Fiscal Service	31, II
Fish and Wildlife Service, United States	50, I, IV
Fishery Conservation and Management	50, VI
Food and Drug Administration	21, I
Food and Nutrition Service	7, II
Food Safety and Inspection Service	9, III
Foreign Agricultural Service	7, XV
Foreign Assets Control, Office of	31, V
Foreign Claims Settlement Commission of the United States	45, V
Foreign Service Grievance Board	22, IX
Foreign Service Impasse Disputes Panel	22, XIV
Foreign Service Labor Relations Board	22, XIV
Foreign-Trade Zones Board	15, IV
Forest Service	36, II
General Services Administration	5, LVII; 41, 105
Contract Appeals, Board of	48, 61
Federal Acquisition Regulation	48, 5
Federal Management Regulation	41, 102

Agency	CFR Title, Subtitle or Chapter
Federal Property Management Regulations	41, 101
Federal Travel Regulation System	41, Subtitle F
General	41, 300
Payment From a Non-Federal Source for Travel Expenses	41, 304
Payment of Expenses Connected With the Death of Certain Employees	41, 303
Relocation Allowances	41, 302
Temporary Duty (TDY) Travel Allowances	41, 301
Geological Survey	30, IV
Government Accountability Office	4, I
Government Ethics, Office of	5, XVI
Government National Mortgage Association	24, III
Grain Inspection, Packers and Stockyards Administration	7, VIII; 9, II
Harry S. Truman Scholarship Foundation	45, XVIII
Health and Human Services, Department of	5, XLV; 45, Subtitle A
Centers for Medicare & Medicaid Services	42, IV
Child Support Enforcement, Office of	45, III
Children and Families, Administration for	45, II, III, IV, X
Community Services, Office of	45, X
Defense Acquisition Regulations System	48, 2
Family Assistance, Office of	45, II
Federal Acquisition Regulation	48, 3
Food and Drug Administration	21, I
Human Development Services, Office of	45, XIII
Indian Health Service	25, V; 42, I
Inspector General (Health Care), Office of	42, V
Public Health Service	42, I
Refugee Resettlement, Office of	45, IV
Homeland Security, Department of	6, I
Coast Guard	33, I; 46, I; 49, IV
Coast Guard (Great Lakes Pilotage)	46, III
Customs and Border Protection Bureau	19, I
Federal Emergency Management Agency	44, I
Immigration and Customs Enforcement Bureau	19, IV
Immigration and Naturalization	8, I
Transportation Security Administration	49, XII
Housing and Urban Development, Department of	5, LXV; 24, Subtitle B
Community Planning and Development, Office of Assistant Secretary for	24, V, VI
Equal Opportunity, Office of Assistant Secretary for	24, I
Federal Acquisition Regulation	48, 24
Federal Housing Enterprise Oversight, Office of	12, XVII
Government National Mortgage Association	24, III
Housing—Federal Housing Commissioner, Office of Assistant Secretary for	24, II, VIII, X, XX
Housing, Office of, and Multifamily Housing Assistance Restructuring, Office of	24, IV
Inspector General, Office of	24, XII
Public and Indian Housing, Office of Assistant Secretary for	24, IX
Secretary, Office of	24, Subtitle A, VII
Housing—Federal Housing Commissioner, Office of Assistant Secretary for	24, II, VIII, X, XX
Housing, Office of, and Multifamily Housing Assistance Restructuring, Office of	24, IV
Human Development Services, Office of	45, XIII
Immigration and Customs Enforcement Bureau	19, IV
Immigration and Naturalization	8, I
Immigration Review, Executive Office for	8, V
Independent Counsel, Office of	28, VII
Indian Affairs, Bureau of	25, I, V
Indian Affairs, Office of the Assistant Secretary	25, VI
Indian Arts and Crafts Board	25, II
Indian Health Service	25, V; 42, I
Industry and Security, Bureau of	15, VII
Information Resources Management, Office of	7, XXVII
Information Security Oversight Office, National Archives and Records Administration	32, XX

Agency	CFR Title, Subtitle or Chapter
Inspector General	
Agriculture Department	7, XXVI
Health and Human Services Department	42, V
Housing and Urban Development Department	24, XII
Institute of Peace, United States	22, XVII
Inter-American Foundation	5, LXIII; 22, X
Interior Department	
American Indians, Office of the Special Trustee	25, VII
Endangered Species Committee	50, IV
Federal Acquisition Regulation	48, 14
Federal Property Management Regulations System	41, 114
Fish and Wildlife Service, United States	50, I, IV
Geological Survey	30, IV
Indian Affairs, Bureau of	25, I, V
Indian Affairs, Office of the Assistant Secretary	25, VI
Indian Arts and Crafts Board	25, II
Land Management, Bureau of	43, II
Minerals Management Service	30, II
National Indian Gaming Commission	25, III
National Park Service	36, I
Reclamation, Bureau of	43, I
Secretary of the Interior, Office of	43, Subtitle A
Surface Mining and Reclamation Appeals, Board of	30, III
Surface Mining Reclamation and Enforcement, Office of	30, VII
Internal Revenue Service	26, I
International Boundary and Water Commission, United States and Mexico, United States Section	22, XI
International Development, United States Agency for	22, II
Federal Acquisition Regulation	48, 7
International Development Cooperation Agency, United States	22, XII
International Fishing and Related Activities	50, III
International Investment, Office of	31, VIII
International Joint Commission, United States and Canada	22, IV
International Organizations Employees Loyalty Board	5, V
International Trade Administration	15, III; 19, III
International Trade Commission, United States	19, II
Interstate Commerce Commission	5, XL
James Madison Memorial Fellowship Foundation	45, XXIV
Japan–United States Friendship Commission	22, XVI
Joint Board for the Enrollment of Actuaries	20, VIII
Justice Department	5, XXVIII; 28, I, XI; 40, IV
Alcohol, Tobacco, Firearms, and Explosives, Bureau of	27, II
Drug Enforcement Administration	21, II
Federal Acquisition Regulation	48, 28
Federal Claims Collection Standards	31, IX
Federal Prison Industries, Inc.	28, III
Foreign Claims Settlement Commission of the United States	45, V
Immigration Review, Executive Office for	8, V
Offices of Independent Counsel	28, VI
Prisons, Bureau of	28, V
Property Management Regulations	41, 128
Labor Department	5, XLII
Benefits Review Board	20, VII
Employee Benefits Security Administration	29, XXV
Employees' Compensation Appeals Board	20, IV
Employment and Training Administration	20, V
Employment Standards Administration	20, VI
Federal Acquisition Regulation	48, 29
Federal Contract Compliance Programs, Office of	41, 60
Federal Procurement Regulations System	41, 50
Labor-Management Standards, Office of	29, II, IV
Mine Safety and Health Administration	30, I
Occupational Safety and Health Administration	29, XVII
Public Contracts	41, 50

Agency	CFR Title, Subtitle or Chapter
Secretary of Labor, Office of	29, Subtitle A
Veterans' Employment and Training Service, Office of the Assistant Secretary for	41, 61; 20, IX
Wage and Hour Division	29, V
Workers' Compensation Programs, Office of	20, I
Labor-Management Standards, Office of	29, II, IV
Land Management, Bureau of	43, II
Legal Services Corporation	45, XVI
Library of Congress	36, VII
Copyright Office	37, II
Copyright Royalty Board	37, III
Local Television Loan Guarantee Board	7, XX
Management and Budget, Office of	5, III, LXXVII; 14, VI; 48, 99
Marine Mammal Commission	50, V
Maritime Administration	46, II
Merit Systems Protection Board	5, II
Micronesian Status Negotiations, Office for	32, XXVII
Mine Safety and Health Administration	30, I
Minerals Management Service	30, II
Minority Business Development Agency	15, XIV
Miscellaneous Agencies	1, IV
Monetary Offices	31, I
Morris K. Udall Scholarship and Excellence in National Environmental Policy Foundation	36, XVI
National Aeronautics and Space Administration	5, LIX; 14, V
Federal Acquisition Regulation	48, 18
National Agricultural Library	7, XLI
National Agricultural Statistics Service	7, XXXVI
National and Community Service, Corporation for	45, XII, XXV
National Archives and Records Administration	5, LXVI; 36, XII
Information Security Oversight Office	32, XX
National Bureau of Standards	15, II
National Capital Planning Commission	1, IV
National Commission for Employment Policy	1, IV
National Commission on Libraries and Information Science	45, XVII
National Council on Disability	34, XII
National Counterintelligence Center	32, XVIII
National Credit Union Administration	12, VII
National Crime Prevention and Privacy Compact Council	28, IX
National Drug Control Policy, Office of	21, III
National Foundation on the Arts and the Humanities	45, XI
National Highway Traffic Safety Administration	23, II, III; 49, V
National Imagery and Mapping Agency	32, I
National Indian Gaming Commission	25, III
National Institute for Literacy	34, XI
National Institute of Standards and Technology	15, II
National Labor Relations Board	5, LXI; 29, I
National Marine Fisheries Service	50, II, IV, VI
National Mediation Board	29, X
National Oceanic and Atmospheric Administration	15, IX; 50, II, III, IV, VI
National Park Service	36, I
National Railroad Adjustment Board	29, III
National Railroad Passenger Corporation (AMTRAK)	49, VII
National Science Foundation	5, XLIII; 45, VI
Federal Acquisition Regulation	48, 25
National Security Council	32, XXI
National Security Council and Office of Science and Technology Policy	47, II
National Telecommunications and Information Administration	15, XXIII; 47, III
National Transportation Safety Board	49, VIII
National Weather Service	15, IX
Natural Resources Conservation Service	7, VI
Navajo and Hopi Indian Relocation, Office of	25, IV
Navy Department	32, VI
Federal Acquisition Regulation	48, 52

Agency	CFR Title, Subtitle or Chapter
Neighborhood Reinvestment Corporation	24, XXV
Northeast Interstate Low-Level Radioactive Waste Commission	10, XVIII
Nuclear Regulatory Commission	5, XLVIII; 10, I
Federal Acquisition Regulation	48, 20
Occupational Safety and Health Administration	29, XVII
Occupational Safety and Health Review Commission	29, XX
Offices of Independent Counsel	28, VI
Oklahoma City National Memorial Trust	36, XV
Operations Office	7, XXVIII
Overseas Private Investment Corporation	5, XXXIII; 22, VII
Patent and Trademark Office, United States	37, I
Payment From a Non-Federal Source for Travel Expenses	41, 304
Payment of Expenses Connected With the Death of Certain Employees	41, 303
Peace Corps	22, III
Pennsylvania Avenue Development Corporation	36, IX
Pension Benefit Guaranty Corporation	29, XL
Personnel Management, Office of	5, I, XXXV; 45, VIII
Federal Acquisition Regulation	48, 17
Federal Employees Group Life Insurance Federal Acquisition Regulation	48, 21
Federal Employees Health Benefits Acquisition Regulation	48, 16
Pipeline and Hazardous Materials Safety Administration	49, I
Postal Rate Commission	5, XLVI; 39, III
Postal Service, United States	5, LX; 39, I
Postsecondary Education, Office of	34, VI
President's Commission on White House Fellowships	1, IV
Presidential Documents	3
Presidio Trust	36, X
Prisons, Bureau of	28, V
Procurement and Property Management, Office of	7, XXXII
Productivity, Technology and Innovation, Assistant Secretary	37, IV
Public Contracts, Department of Labor	41, 50
Public and Indian Housing, Office of Assistant Secretary for	24, IX
Public Health Service	42, I
Railroad Retirement Board	20, II
Reclamation, Bureau of	43, I
Refugee Resettlement, Office of	45, IV
Regional Action Planning Commissions	13, V
Relocation Allowances	41, 302
Research and Innovative Technology Administration	49, XI
Rural Business-Cooperative Service	7, XVIII, XLII
Rural Development Administration	7, XLII
Rural Housing Service	7, XVIII, XXXV
Rural Telephone Bank	7, XVI
Rural Utilities Service	7, XVII, XVIII, XLII
Saint Lawrence Seaway Development Corporation	33, IV
Science and Technology Policy, Office of	32, XXIV
Science and Technology Policy, Office of, and National Security Council	47, II
Secret Service	31, IV
Securities and Exchange Commission	17, II
Selective Service System	32, XVI
Small Business Administration	13, I
Smithsonian Institution	36, V
Social Security Administration	20, III; 48, 23
Soldiers' and Airmen's Home, United States	5, XI
Special Counsel, Office of	5, VIII
Special Education and Rehabilitative Services, Office of	34, III
State Department	22, I; 28, XI
Federal Acquisition Regulation	48, 6
Surface Mining and Reclamation Appeals, Board of	30, III
Surface Mining Reclamation and Enforcement, Office of	30, VII
Surface Transportation Board	49, X
Susquehanna River Basin Commission	18, VIII

Agency	CFR Title, Subtitle or Chapter
Technology Administration	15, XI
Technology Policy, Assistant Secretary for	37, IV
Technology, Under Secretary for	37, V
Tennessee Valley Authority	5, LXIX; 18, XIII
Thrift Supervision Office, Department of the Treasury	12, V
Trade Representative, United States, Office of	15, XX
Transportation, Department of	5, L
Commercial Space Transportation	14, III
Contract Appeals, Board of	48, 63
Emergency Management and Assistance	44, IV
Federal Acquisition Regulation	48, 12
Federal Aviation Administration	14, I
Federal Highway Administration	23, I, II
Federal Motor Carrier Safety Administration	49, III
Federal Railroad Administration	49, II
Federal Transit Administration	49, VI
Maritime Administration	46, II
National Highway Traffic Safety Administration	23, II, III; 49, V
Pipeline and Hazardous Materials Safety Administration	49, I
Saint Lawrence Seaway Development Corporation	33, IV
Secretary of Transportation, Office of	14, II; 49, Subtitle A
Surface Transportation Board	49, X
Transportation Statistics Bureau	49, XI
Transportation, Office of	7, XXXIII
Transportation Security Administration	49, XII
Transportation Statistics Bureau	49, XI
Travel Allowances, Temporary Duty (TDY)	41, 301
Treasury Department	5, XXI; 12, XV; 17, IV; 31, IX
Alcohol and Tobacco Tax and Trade Bureau	27, I
Community Development Financial Institutions Fund	12, XVIII
Comptroller of the Currency	12, I
Customs and Border Protection Bureau	19, I
Engraving and Printing, Bureau of	31, VI
Federal Acquisition Regulation	48, 10
Federal Law Enforcement Training Center	31, VII
Fiscal Service	31, II
Foreign Assets Control, Office of	31, V
Internal Revenue Service	26, I
International Investment, Office of	31, VIII
Monetary Offices	31, I
Secret Service	31, IV
Secretary of the Treasury, Office of	31, Subtitle A
Thrift Supervision, Office of	12, V
Truman, Harry S. Scholarship Foundation	45, XVIII
United States and Canada, International Joint Commission	22, IV
United States and Mexico, International Boundary and Water Commission, United States Section	22, XI
Utah Reclamation Mitigation and Conservation Commission	43, III
Veterans Affairs Department	38, I
Federal Acquisition Regulation	48, 8
Veterans' Employment and Training Service, Office of the Assistant Secretary for	41, 61; 20, IX
Vice President of the United States, Office of	32, XXVIII
Vocational and Adult Education, Office of	34, IV
Wage and Hour Division	29, V
Water Resources Council	18, VI
Workers' Compensation Programs, Office of	20, I
World Agricultural Outlook Board	7, XXXVIII

Table of OMB Control Numbers

The OMB control numbers for chapter I of title 26 were consolidated into §§ 601.9000 and 602.101 at 50 FR 10221, Mar. 14, 1985. At 61 FR 58008, Nov. 12, 1996, § 601.9000 was removed. Section 602.101 is reprinted below for the convenience of the user.

§ 602.101 OMB Control numbers.

(a) *Purpose.* This part collects and displays the control numbers assigned to collections of information in Internal Revenue Service regulations by the Office of Management and Budget (OMB) under the Paperwork Reduction Act of 1980. The Internal Revenue Service intends that this part comply with the requirements of §§ 1320.7(f), 1320.12, 1320.13, and 1320.14 of 5 CFR part 1320 (OMB regulations implementing the Paperwork Reduction Act), for the display of control numbers assigned by OMB to collections of information in Internal Revenue Service regulations. This part does not display control numbers assigned by the Office of Management and Budget to collections of information of the Bureau of Alcohol, Tobacco, and Firearms.

(b) *Display.*

CFR part or section where identified and described	Current OMB control No.
1.1(h)–1(e)	1545–1654
1.23–5	1545–0074
1.25–1T	1545–0922
	1545–0930
1.25–2T	1545–0922
	1545–0930
1.25–3T	1545–0922
	1545–0930
1.25–4T	1545–0922
1.25–5T	1545–0922
1.25–6T	1545–0922
1.25–7T	1545–0922
1.25–8T	1545–0922
1.25A–1	1545–1630
1.28–1	1545–0619
1.31–2	1545–0074
1.32–2	1545–0074
1.32–3	1545–1575
1.37–1	1545–0074
1.37–3	1545–0074
1.41–2	1545–0619
1.41–3	1545–0619
1.41–4A	1545–0074
1.41–4 (b) and (c)	1545–0074
1.41–8(b)	1545–1625
1.41–8(d)	1545–0732
1.41–9	1545–0619
1.42–1T	1545–0984
	1545–0988
1.42–2	1545–1005
1.42–5	1545–1357
1.42–6	1545–1102
1.42–8	1545–1102
1.42–10	1545–1102
1.42–13	1545–1357
1.42–14	1545–1423
1.42–17	1545–1357
1.43–3(a)(3)	1545–1292
1.43–3(b)(3)	1545–1292
1.44A–1	1545–0068
1.44A–3	1545–0074
1.44B–1	1545–0219
1.45D–1	1545–1765
1.46–1	1545–0123
	1545–0155
1.46–3	1545–0155
1.46–4	1545–0155
1.46–5	1545–0155
1.46–6	1545–0155
1.46–8	1545–0155
1.46–9	1545–0155
1.46–10	1545–0118
1.46–11	1545–0155
1.47–1	1545–0166
	1545–0155
1.47–3	1545–0166
	1545–0155
1.47–4	1545–0123
1.47–5	1545–0092
1.47–6	1545–0099
1.48–3	1545–0155
1.48–4	1545–0808
	1545–0155
1.48–5	1545–0155
1.48–6	1545–0155
1.48–12	1545–0155
	1545–1783
1.50A–1	1545–0895
1.50A–2	1545–0895
1.50A–3	1545–0895
1.50A–4	1545–0895
1.50A–5	1545–0895
1.50A–6	1545–0895
1.50A–7	1545–0895
1.50B–1	1545–0895
1.50B–2	1545–0895
1.50B–3	1545–0895
1.50B–4	1545–0895
1.50B–5	1545–0895
1.51–1	1545–0219
	1545–0241
	1545–0244
	1545–0797
1.52–2	1545–0219

CFR part or section where identified and described	Current OMB control No.
1.52–3	1545–0219
1.56–1	1545–0123
1.56(g)–1	1545–1233
1.56A–1	1545–0227
1.56A–2	1545–0227
1.56A–3	1545–0227
1.56A–4	1545–0227
1.56A–5	1545–0227
1.57–5	1545–0227
1.58–1	1545–0175
1.58–9(c)(5)(iii)(B)	1545–1093
1.58–9(e)(3)	1545–1093
1.59–1	1545–1903
1.61–2	1545–0771
1.61–2T	1545–0771
1.61–4	1545–0187
1.61–15	1545–0074
1.62–2	1545–1148
1.63–1	1545–0074
1.66–4	1545–1770
1.67–2T	1545–0110
1.67–3	1545–1018
1.67–3T	1545–0118
1.71–1T	1545–0074
1.72–4	1545–0074
1.72–6	1545–0074
1.72–9	1545–0074
1.72–17	1545–0074
1.72–17A	1545–0074
1.72–18	1545–0074
1.74–1	1545–1100
1.79–2	1545–0074
1.79–3	1545–0074
1.83–2	1545–0074
1.83–5	1545–0074
1.83–6	1545–1448
1.103–10	1545–0123
	1545–0940
1.103–15AT	1545–0720
1.103–18	1545–1226
1.103(n)–2T	1545–0874
1.103(n)–4T	1545–0874
1.103A–2	1545–0720
1.105–4	1545–0074
1.105–5	1545–0074
1.105–6	1545–0074
1.108–4	1545–1539
1.108–5	1545–1421
1.110–1	1545–1661
1.117–5	1545–0869
1.118–2	1545–1639
1.119–1	1545–0067
1.120–3	1545–0057
1.121–1	1545–0072
1.121–2	1545–0072
1.121–3	1545–0072
1.121–4	1545–0072
	1545–0091
1.121–5	1545–0072
1.127–2	1545–0768
1.132–1T	1545–0771
1.132–2	1545–0771
1.132–2T	1545–0771
1.132–5	1545–0771
1.132–5T	1545–0771
	1545–1098
1.132–9(b)	1545–1676
1.141–1	1545–1451
1.141–12	1545–1451
1.142–2	1545–1451
1.142(f)(4)–1	1545–1730
1.148–0	1545–1098
1.148–1	1545–1098
1.148–2	1545–1098
	1545–1347
1.148–3	1545–1098
	1545–1347
1.148–4	1545–1098
	1545–1347
1.148–5	1545–1098
	1545–1490
1.148–6	1545–1098
	1545–1451
1.148–7	1545–1098
	1545–1347
1.148–8	1545–1098
1.148–11	1545–1098
	1545–1347
1.149(e)–1	1545–0720
1.150–1	1545–1347
1.151–1	1545–0074
1.152–3	1545–0071
	1545–1783
1.152–4	1545–0074
1.152–4T	1545–0074
1.162–1	1545–0139
1.162–2	1545–0139
1.162–3	1545–0139
1.162–4	1545–0139
1.162–5	1545–0139
1.162–6	1545–0139
1.162–7	1545–0139
1.162–8	1545–0139
1.162–9	1545–0139
1.162–10	1545–0139
1.162–11	1545–0139
1.162–12	1545–0139
1.162–13	1545–0139
1.162–14	1545–0139
1.162–15	1545–0139
1.162–16	1545–0139
1.162–17	1545–0139
1.162–18	1545–0139
1.162–19	1545–0139
1.162–20	1545–0139
1.162–27	1545–1466
1.163–5	1545–0786
	1545–1132
1.163–8T	1545–0995
1.163–10T	1545–0074
1.163–13	1545–1491
1.163(d)–1	1545–1421
1.165–1	1545–0177
1.165–2	1545–0177
1.165–3	1545–0177
1.165–4	1545–0177
1.165–5	1545–0177
1.165–6	1545–0177
1.165–7	1545–0177
1.165–8	1545–0177
1.165–9	1545–0177
1.165–10	1545–0177
1.165–11	1545–0074
	1545–0177
	1545–0786
1.165–12	1545–0786
1.166–1	1545–0123
1.166–2	1545–1254
1.166–4	1545–0123
1.166–10	1545–0123
1.167(a)–5T	1545–1021
1.167(a)–7	1545–0172
1.167(a)–11	1545–0152
	1545–0172

CFR part or section where identified and described	Current OMB control No.
1.167(a)–12	1545–0172
1.167(d)–1	1545–0172
1.167(e)–1	1545–0172
1.167(f)–11	1545–0172
1.167(l)–1	1545–0172
1.168(d)–1	1545–1146
1.168(f)(8)–1T	1545–0923
1.168(i)–1	1545–1331
1.168–5	1545–0172
1.169–4	1545–0172
1.170–1	1545–0074
1.170–2	1545–0074
1.170–3	1545–0123
1.170A–1	1545–0074
1.170A–2	1545–0074
1.170A–4(A)(b)	1545–0123
1.170A–8	1545–0074
1.170A–9	1545–0052
	1545–0074
1.170A–11	1545–0123
	1545–0074
1.170A–11T	1545–1868
1.170A–12	1545–0020
	1545–0074
1.170A–13	1545–0074
	1545–0754
	1545–0908
	1545–1431
1.170A–13(f)	1545–1464
1.170A–14	1545–0763
1.171–4	1545–1491
1.171–5	1545–1491
1.172–1	1545–0172
1.172–13	1545–0863
1.173–1	1545–0172
1.174–3	1545–0152
1.174–4	1545–0152
1.175–3	1545–0187
1.175–6	1545–0152
1.177–1	1545–0172
1.179–2	1545–1201
1.179–3	1545–1201
1.179–5	1545–0172
	1545–1201
1.180–2	1545–0074
1.182–6	1545–0074
1.183–1	1545–0195
1.183–2	1545–0195
1.183–3	1545–0195
1.183–4	1545–0195
1.190–3	1545–0074
1.194–2	1545–0735
1.194–4	1545–0735
1.195–1	1545–1582
1.197–1T	1545–1425
1.197–2	1545–1671
1.213–1	1545–0074
1.215–1T	1545–0074
1.217–2	1545–0182
1.243–3	1545–0123
1.243–4	1545–0123
1.243–5	1545–0123
1.248–1	1545–0172
1.261–1	1545–1041
1.263(a)–5	1545–1870
1.263(e)–1	1545–0123
1.263A–1	1545–0987
1.263A–1T	1545–0187
1.263A–2	1545–0987
1.263A–3	1545–0987
	1545–0987
1.263A–8(b)(2)(iii)	1545–1265
1.263A–9(d)(1)	1545–1265
1.263A–9(f)(1)(ii)	1545–1265
1.263A–9(f)(2)(iv)	1545–1265
1.263A–9(g)(2)(iv)(C)	1545–1265
1.263A–9(g)(3)(iv)	1545–1265
1.265–1	1545–0074
1.265–2	1545–0123
1.266–1	1545–0123
1.267(f)–1	1545–0885
1.268–1	1545–0184
1.274–1	1545–0139
1.274–2	1545–0139
1.274–3	1545–0139
1.274–4	1545–0139
1.274–5	1545–0771
1.274–5A	1545–0139
	1545–0771
1.274–5T	1545–0074
	1545–0172
	1545–0771
1.274–6	1545–0139
	1545–0771
1.274–6T	1545–0074
	1545–0771
1.274–7	1545–0139
1.274–8	1545–0139
1.279–6	1545–0123
1.280C–4	1545–1155
1.280F–3T	1545–0074
1.280G–1	1545–1851
1.281–4	1545–0123
1.302–4	1545–0074
1.305–3	1545–0123
1.305–5	1545–1438
1.307–2	1545–0074
1.312–15	1545–0172
1.316–1	1545–0123
1.331–1	1545–0074
1.332–4	1545–0123
1.332–6	1545–0123
1.337(d)–1	1545–1160
1.337(d)–2	1545–1160
1.337(d)–2	1545–1774
1.337(d)–4	1545–1633
1.337(d)–5	1545–1672
1.337(d)–6	1545–1672
1.337(d)–7	1545–1672
1.338–2	1545–1658
1.338–5	1545–1658
1.338–10	1545–1658
1.338(h)(10)–1	1545–1658
1.341–7	1545–0123
1.351–3	1545–0074
1.355–5	1545–0123
1.362–2	1545–0123
1.367(a)–1T	1545–0026
1.367(a)–2T	1545–0026
1.367(a)–3	1545–0026
	1545–1478
1.367(a)–6T	1545–0026
1.367(a)–8	1545–1271
1.367(b)–1	1545–1271
1.367(b)–3T	1545–1666
1.367(d)–1T	1545–0026
1.367(e)–1	1545–1487
1.367(e)–2	1545–1487
1.368–1	1545–1691
1.368–3	1545–0123
1.371–1	1545–0123
1.371–2	1545–0123
1.374–3	1545–0123
1.381(b)–1	1545–0123

CFR part or section where identified and described	Current OMB control No.
1.381(c)(4)–1	1545–0123
	1545–0152
	1545–0879
1.381(c)(5)–1	1545–0123
	1545–0152
1.381(c)(6)–1	1545–0123
	1545–0152
1.381(c)(8)–1	1545–0123
1.381(c)(10)–1	1545–0123
1.381(c)(11)–1(k)	1545–0123
1.381(c)(13)–1	1545–0123
1.381(c)(17)–1	1545–0045
1.381(c)(25)–1	1545–0045
1.382–1T	1545–0123
1.382–2	1545–0123
1.382–2T	1545–0123
1.382–3	1545–1281
	1545–1345
1.382–4	1545–1120
1.382–6	1545–1381
1.382–8	1545–1434
1.382–9	1545–1260
	1545–1120
	1545–1275
	1545–1324
1.382–91	1545–1260
	1545–1324
1.383–1	1545–0074
	1545–1120
1.401–1	1545–0020
	1545–0197
	1545–0200
	1545–0534
	1545–0710
1.401(a)–11	1545–0710
1.401(a)–20	1545–0928
1.401(a)–31	1545–1341
1.401(a)–50	1545–0710
1.401(a)(31)–1	1545–1341
1.401(b)–1	1545–0197
1.401(f)–1	1545–0710
1.401(k)–1	1545–1039
	1545–1069
	1545–1669
	1545–1930
1.401(k)–2	1545–1669
1.401(k)–3	1545–1669
1.401(k)–4	1545–1669
1.401(m)–3	1545–1699
1.401(a)(9)–1	1545–1573
1.401(a)(9)–3	1545–1466
1.401(a)(9)–4	1545–1573
1.401–12(n)	1545–0806
1.401–14	1545–0710
1.402(c)–2	1545–1341
1.402(f)–1	1545–1341
	1545-1632
1.403(b)–1	1545–0710
1.403(b)–2	1545–1341
1.403(b)–3	1545–0996
1.404(a)–4	1545–0710
1.404(a)–12	1545–0710
1.404A–2	1545–0123
1.404A–6	1545–0123
1.408–2	1545–0390
1.408–5	1545–0747
1.408–6	1545–0203
	1545–0390
1.408–7	1545–0119
1.408(q)–1	1545–1841
1.408A–2	1545–1616
1.408A–4	1545–1616
1.408A–5	1545–1616
1.408A–7	1545–1616
1.410(a)–2	1545–0710
1.410(d)–1	1545–0710
1.411(a)–11	1545–1471
	1545–1632
1.411(d)–4	1545–1545
1.411(d)–6	1545–1477
1.412(b)–5	1545–0710
1.412(c)(1)–2	1545–0710
1.412(c)(2)–1	1545–0710
1.412(c)(3)–2	1545–0710
1.414(c)–5	1545–0797
1.414(r)–1	1545–1221
1.415–2	1545–0710
1.415–6	1545–0710
1.417(a)(3)–1	1545–0928
1.417(e)–1	1545–1471
	1545–1724
1.417(e)–1T	1545–1471
1.419A(f)(6)–1	1545–1795
1.422–1	1545–0820
1.441–2	1545–1748
1.442–1	1545–0074
	1545–0123
	1545–0134
	1545–0152
	1545–0820
	1545–1748
1.443–1	1545–0123
1.444–3T	1545–1036
1.444–4	1545–1591
1.446–1	1545–0074
	1545–0152
1.446–4(d)	1545–1412
1.448–1(g)	1545–0152
1.448–1(h)	1545–0152
1.448–1(i)	1545–0152
1.448–2T	1545–0152
	1545–1855
1.451–1	1545–0091
1.451–4	1545–0123
1.451–5	1545–0074
1.451–6	1545–0074
1.451–7	1545–0074
1.453–1	1545–0152
1.453–2	1545–0152
1.453–8	1545–0152
	1545–0228
1.453–10	1545–0152
1.453A–1	1545–0152
	1545–1134
1.453A–2	1545–0152
	1545–1134
1.453A–3	1545–0963
1.454–1	1545–0074
1.455–2	1545–0152
1.455–6	1545–0123
1.456–2	1545–0123
1.456–6	1545–0123
1.456–7	1545–0123
1.457–8	1545–1580
1.458–1	1545–0879
1.458–2	1545–0152
1.460–1	1545–1650
1.460–6	1545–1031
	1545–1572
	1545–1732
1.461–1	1545–0074
1.461–2	1545–0096
1.461–4	1545–0917
1.461–5	1545–0917

CFR part or section where identified and described	Current OMB control No.
1.463–1T	1545–0916
1.465–1T	1545–0712
1.466–1T	1545–0152
1.466–4	1545–0152
1.468A–3	1545–1269
	1545–1378
	1545–1511
1.468A–4	1545–0954
1.468A–7	1545–0954
1.468A–8	1545–1269
1.468B–1	1545–1631
1.468B–9	1545–1631
1.468B–1(j)	1545–1299
1.468B–2(k)	1545–1299
1.468B–2(l)	1545–1299
1.468B–3(b)	1545–1299
1.468B–3(e)	1545–1299
1.468B–5(b)	1545–1299
1.469–1	1545–1008
1.469–2T	1545–0712
	1545–1091
1.469–4T	1545–0985
	1545–1037
1.469–7	1545–1244
1.471–2	1545–0123
1.471–5	1545–0123
1.471–6	1545–0123
1.471–8	1545–0123
1.471–11	1545–0123
	1545–0152
1.472–1	1545–0042
	1545–0152
1.472–2	1545–0152
1.472–3	1545–0042
1.472–5	1545–0152
1.472–8	1545–0028
	1545–0042
	1545–1767
1.475(b)–4	1545–1496
1.481–4	1545–0152
1.481–5	1545–0152
1.482–1	1545–1364
1.482–4	1545–1364
1.482–7	1545–1364
	1545–1794
1.501(a)–1	1545–0056
	1545–0057
1.501(c)(3)–1	1545–0056
1.501(c)(9)–5	1545–0047
1.501(c)(17)–3	1545–0047
1.501(e)–1	1545–0814
1.503(c)–1	1545–0047
	1545–0052
1.505(c)–1T	1545–0916
1.507–1	1545–0052
1.507–2	1545–0052
1.508–1	1545–0052
	1545–0056
1.509(a)–3	1545–0047
1.509(a)–5	1545–0047
1.509(c)–1	1545–0052
1.512(a)–1	1545–0687
1.512(a)–4	1545–0047
	1545–0687
1.521–1	1545–0051
	1545–0058
1.527–2	1545–0129
1.527–5	1545–0129
1.527–6	1545–0129
1.527–9	1545–0129
1.528–8	1545–0127
1.533–2	1545–0123
1.534–2	1545–0123
1.542–3	1545–0123
1.545–2	1545–0123
1.545–3	1545–0123
1.547–2	1545–0045
	1545–0123
1.547–3	1545–0123
1.551–4	1545–0074
1.552–3	1545–0099
1.552–4	1545–0099
1.552–5	1545–0099
1.556–2	1545–0704
1.561–1	1545–0044
1.561–2	1545–0123
1.562–3	1545–0123
1.563–2	1545–0123
1.564–1	1545–0123
1.565–1	1545–0043
	1545–0123
1.565–2	1545–0043
1.565–3	1545–0043
1.565–5	1545–0043
1.565–6	1545–0043
1.585–1	1545–0123
1.585–3	1545–0123
1.585–8	1545–1290
1.586–2	1545–0123
1.593–1	1545–0123
1.593–6	1545–0123
1.593–6A	1545–0123
1.593–7	1545–0123
1.595–1	1545–0123
1.597–2	1545–1300
1.597–4	1545–1300
1.597–6	1545–1300
1.597–7	1545–1300
1.611–2	1545–0099
1.611–3	1545–0007
	1545–0099
	1545–1784
1.612–4	1545–0074
1.612–5	1545–0099
1.613–3	1545–0099
1.613–4	1545–0099
1.613–6	1545–0099
1.613–7	1545–0099
1.613A–3	1545–0919
1.613A–3(e)	1545–1251
1.613A–3(l)	1545–0919
1.613A–5	1545–0099
1.613A–6	1545–0099
1.614–2	1545–0099
1.614–3	1545–0099
1.614–5	1545–0099
1.614–6	1545–0099
1.614–8	1545–0099
1.617–1	1545–0099
1.617–3	1545–0099
1.617–4	1545–0099
1.631–1	1545–0007
1.631–2	1545–0007
1.641(b)–2	1545–0092
1.642(c)–1	1545–0092
1.642(c)–2	1545–0092
1.642(c)–5	1545–0074
1.642(c)–6	1545–0020
	1545–0074
	1545–0092
1.642(g)–1	1545–0092
1.642(i)–1	1545–0092
1.645–1	1545–1578
1.663(b)–2	1545–0092

CFR part or section where identified and described	Current OMB control No.
1.664–1	1545–0196
1.664–1(a)(7)	1545–1536
1.664–2	1545–0196
1.664–3	1545–0196
1.664–4	1545–0020
	1545–0196
1.665(a)–0A through	
1.665(g)–2A	1545–0192
1.666(d)–1A	1545–0092
1.671–4	1545–1442
1.671–5	1545–1540
1.701–1	1545–0099
1.702–1	1545–0074
1.703–1	1545–0099
1.704–2	1545–1090
1.706–1	1545–0099
	1545–0074
	1545–0134
1.706–1T	1545–0099
1.707–3(c)(2)	1545–1243
1.707–5(a)(7)(ii)	1545–1243
1.707–6(c)	1545–1243
1.707–8	1545–1243
1.708–1	1545–0099
1.732–1	1545–0099
	1545–1588
1.736–1	1545–0074
1.743–1	1545–0074
	1545–1588
1.751–1	1545–0074
	1545–0099
	1545–0941
1.752–5	1545–1090
1.752–7	1545–1843
1.754–1	1545–0099
1.755–1	1545–0099
1.761–2	1545–1338
1.801–1	1545–0123
	1545–0128
1.801–3	1545–0123
1.801–5	1545–0128
1.801–8	1545–0128
1.804–4	1545–0128
1.811–2	1545–0128
1.812–2	1545–0128
1.815–6	1545–0128
1.818–4	1545–0128
1.818–5	1545–0128
1.818–8	1545–0128
1.819–2	1545–0128
1.821–1	1545–1027
1.821–3	1545–1027
1.821–4	1545–1027
1.822–5	1545–1027
1.822–6	1545–1027
1.822–8	1545–1027
1.822–9	1545–1027
1.823–2	1545–1027
1.823–5	1545–1027
1.823–6	1545–1027
1.825–1	1545–1027
1.826–1	1545–1027
1.826–2	1545–1027
1.826–3	1545–1027
1.826–4	1545–1027
1.826–6	1545–1027
1.831–3	1545–0123
1.831–4	1545–0123
1.832–4	1545–1227
1.832–5	1545–0123
1.848–2(g)(8)	1545–1287
1.848–2(h)(3)	1545–1287
1.848–2(i)(4)	1545–1287
1.851–2	1545–1010
1.851–4	1545–0123
1.852–1	1545–0123
1.852–4	1545–0123
	1545–0145
1.852–6	1545–0123
	1545–0144
1.852–7	1545–0074
1.852–9	1545–0074
	1545–0123
	1545–0144
	1545–0145
	1545–1783
1.852–11	1545–1094
1.853–3	1545–0123
1.853–4	1545–0123
1.854–2	1545–0123
1.855–1	1545–0123
1.856–2	1545–0123
	1545–1004
1.856–6	1545–0123
1.856–7	1545–0123
1.856–8	1545–0123
1.857–8	1545–0123
1.857–9	1545–0074
1.858–1	1545–0123
1.860–2	1545–0045
1.860–4	1545–0045
	1545–1054
	1545–1057
1.860E–1	1545–1675
1.860E–2(a)(5)	1545–1276
1.860E–2(a)(7)	1545–1276
1.860E–2(b)(2)	1545–1276
1.861–2	1545–0089
1.861–3	1545–0089
1.861–4	1545–1900
1.861–8	1545–0126
1.861–8(e)(6) and (g)	1545–1224
1.861–9T	1545–0121
	1545–1072
1.861–18	1545–1594
1.863–1	1545–1476
1.863–3	1545–1476
	1545–1556
1.863–3A	1545–0126
1.863–4	1545–0126
1.863–7	1545–0132
1.864–4	1545–0126
1.871–1	1545–0096
1.871–6	1545–0795
1.871–7	1545–0089
1.871–10	1545–0089
	1545–0165
1.874–1	1545–0089
1.881–4	1545–1440
1.882–4	1545–0126
1.883–1	1545–1677
1.883–2	1545–1677
1.883–3	1545–1677
1.883–4	1545–1677
1.883–5	1545–1677
1.884–0	1545–1070
1.884–1	1545–1070
1.884–2	1545–1070
1.884–2T	1545–0126
	1545–1070
1.884–4	1545–1070
1.884–5	1545–1070
1.892–1T	1545–1053
1.892–2T	1545–1053

CFR part or section where identified and described	Current OMB control No.
1.892–3T	1545–1053
1.892–4T	1545–1053
1.892–5T	1545–1053
1.892–6T	1545–1053
1.892–7T	1545–1053
1.897–2	1545–0123
	1545–0902
1.897–3	1545–0123
1.897–5T	1545–0902
1.897–6T	1545–0902
1.901–2	1545–0746
1.901–2A	1545–0746
1.901–3	1545–0122
1.902–1	1545–0122
	1545–1458
1.904–1	1545–0121
	1545–0122
1.904–2	1545–0121
	1545–0122
1.904–3	1545–0121
1.904–4	1545–0121
1.904–5	1545–0121
1.904(f)–1	1545–0121
	1545–0122
1.904(f)–2	1545–0121
1.904(f)–3	1545–0121
1.904(f)–4	1545–0121
1.904(f)–5	1545–0121
1.904(f)–6	1545–0121
1.904(f)–7	1545–1127
1.905–2	1545–0122
1.905–3T	1545–1056
1.905–4T	1545–1056
1.905–5T	1545–1056
1.911–1	1545–0067
	1545–0070
1.911–2	1545–0067
	1545–0070
1.911–3	1545–0067
	1545–0070
1.911–4	1545–0067
	1545–0070
1.911–5	1545–0067
	1545–0070
1.911–6	1545–0067
	1545–0070
1.911–7	1545–0067
	1545–0070
1.913–13	1545–0067
1.921–1T	1545–0190
	1545–0884
	1545–0935
	1545–0939
1.921–2	1545–0884
1.921–3T	1545–0935
1.923–1T	1545–0935
1.924(a)–1T	1545–0935
1.925(a)–1T	1545–0935
1.925(b)–1T	1545–0935
1.926(a)–1T	1545–0935
1.927(a)–1T	1545–0935
1.927(b)–1T	1545–0935
1.927(d)–1	1545–0884
1.927(d)–2T	1545–0935
1.927(e)–1T	1545–0935
1.927(e)–2T	1545–0935
1.927(f)–1	1545–0884
1.931–1	1545–0074
	1545–0123
1.934–1	1545–0782
1.935–1	1545–0074
	1545–0087
	1545–0803
1.936–1	1545–0215
	1545–0217
1.936–4	1545–0215
1.936–5	1545–0704
1.936–6	1545–0215
1.936–7	1545–0215
1.936–10(c)	1545–1138
1.937–1	1545–1930
1.952–2	1545–0126
1.953–2	1545–0126
1.954–1	1545–1068
1.954–2	1545–1068
1.955–2	1545–0123
1.955–3	1545–0123
1.955A–2	1545–0755
1.955A–3	1545–0755
1.956–1	1545–0704
1.956–2	1545–0704
1.959–1	1545–0704
1.959–2	1545–0704
1.960–1	1545–0122
1.962–2	1545–0704
1.962–3	1545–0704
1.962–4	1545–0704
1.964–1	1545–0126
	1545–0704
	1545–1072
1.964–3	1545–0126
1.970–2	1545–0126
1.985–2	1545–1051
	1545–1131
1.985–3	1545–1051
1.988–0	1545–1131
1.988–1	1545–1131
1.988–2	1545–1131
1.988–3	1545–1131
1.988–4	1545–1131
1.988–5	1545–1131
1.988–6	1545–1831
1.992–1	1545–0190
	1545–0938
1.992–2	1545–0190
	1545–0884
	1545–0938
1.992–3	1545–0190
	1545–0938
1.992–4	1545–0190
	1545–0938
1.993–3	1545–0938
1.993–4	1545–0938
1.994–1	1545–0938
1.995–5	1545–0938
1.1012–1	1545–0074
	1545–1139
1.1014–4	1545–0184
1.1015–1	1545–0020
1.1017–1	1545–1539
1.1031(d)–1T	1545–1021
1.1033(a)–2	1545–0184
1.1033(g)–1	1545–0184
1.1034–1	1545–0072
1.1039–1	1545–0184
1.1041–1T	1545–0074
1.1041–2	1545–1751
1.1042–1T	1545–0916
1.1044(a)–1	1545–1421
1.1060–1	1545–1658
1.1071–1	1545–0184
1.1071–4	1545–0184
1.1081–4	1545–0028
	1545–0046

CFR part or section where identified and described	Current OMB control No.
	1545–0123
1.1081–11	1545–0074
	1545–0123
1.1082–1	1545–0046
1.1082–2	1545–0046
1.1082–3	1545–0046
	1545–0184
1.1082–4	1545–0046
1.1082–5	1545–0046
1.1082–6	1545–0046
1.1083–1	1545–0123
1.1092(b)–1T	1545–0644
1.1092(b)–2T	1545–0644
1.1092(b)–3T	1545–0644
1.1092(b)–4T	1545–0644
1.1092(b)–5T	1545–0644
1.1211–1	1545–0074
1.1212–1	1545–0074
1.1221–2	1545–1480
1.1231–1	1545–0177
	1545–0184
1.1231–2	1545–0177
	1545–0184
1.1231–2	1545–0074
1.1232–3	1545–0074
1.1237–1	1545–0184
1.1239–1	1545–0091
1.1242–1	1545–0184
1.1243–1	1545–0123
1.1244(e)–1	1545–0123
	1545–1447
1.1245–1	1545–0184
1.1245–2	1545–0184
1.1245–3	1545–0184
1.1245–4	1545–0184
1.1245–5	1545–0184
1.1245–6	1545–0184
1.1247–1	1545–0122
1.1247–2	1545–0122
1.1247–4	1545–0122
1.1247–5	1545–0122
1.1248–7	1545–0074
1.1250–1	1545–0184
1.1250–2	1545–0184
1.1250–3	1545–0184
1.1250–4	1545–0184
1.1250–5	1545–0184
1.1251–1	1545–0184
1.1251–2	1545–0074
	1545–0184
1.1251–3	1545–0184
1.1251–4	1545–0184
1.1252–1	1545–0184
1.1252–2	1545–0184
1.1254–1(c)(3)	1545–1352
1.1254–4	1545–1493
1.1254–5(d)(2)	1545–1352
1.1258–1	1545–1452
1.1272–3	1545–1353
1.1273–2(h)(2)	1545–1353
1.1274–3(d)	1545–1353
1.1274–5(b)	1545–1353
1.1274A–1(c)	1545–1353
1.1275–2	1545–1450
1.1275–3	1545–0887
	1545–1353
	1545–1450
1.1275–4	1545–1450
1.1275–6	1545–1450
1.1287–1	1545–0786
1.1291–9	1545–1507
1.1291–10	1545–1507

CFR part or section where identified and described	Current OMB control No.
	1545–1304
1.1294–1T	1545–1002
	1545–1028
1.1295–1	1545–1555
1.1295–3	1545–1555
1.1297–3T	1545–1965
1.1298–3	1545–1507
1.1301–1	1545–1662
1.1311(a)–1	1545–0074
1.1361–1	1545–0731
	1545–1591
1.1361–3	1545–1590
1.1361–5	1545–1590
1.1362–1	1545–1308
1.1362–2	1545–1308
1.1362–3	1545–1308
1.1362–4	1545–1308
1.1362–5	1545–1308
1.1362–6	1545–1308
1.1362–7	1545–1308
1.1362–8	1545–1590
1.1363–2	1545–1906
1.1366–1	1545–1613
1.1367–1(f)	1545–1139
1.1368–1(f)(2)	1545–1139
1.1368–1(f)(3)	1545–1139
1.1368–1(f)(4)	1545–1139
1.1368–1(g)(2)	1545–1139
1.1374–1A	1545–0130
1.1377–1	1545–1462
1.1378–1	1545–1748
1.1383–1	1545–0074
1.1385–1	1545–0074
	1545–0098
1.1388–1	1545–0118
	1545–0123
1.1398–1	1545–1375
1.1398–2	1545–1375
1.1402(a)–2	1545–0074
1.1402(a)–5	1545–0074
1.1402(a)–11	1545–0074
1.1402(a)–15	1545–0074
1.1402(a)–16	1545–0074
1.1402(b)–1	1545–0171
1.1402(c)–2	1545–0074
1.1402(e)(1)–1	1545–0074
1.1402(e)(2)–1	1545–0074
1.1402(e)–1A	1545–0168
1.1402(e)–2A	1545–0168
1.1402(e)–3A	1545–0168
1.1402(e)–4A	1545–0168
1.1402(e)–5A	1545–0168
1.1402(f)–1	1545–0074
1.1402(h)–1	1545–0064
1.1441–1	1545–1484
1.1441–2	1545–0795
1.1441–3	1545–0165
	1545–0795
1.1441–4	1545–1484
1.1441–5	1545–0096
	1545–0795
	1545–1484
1.1441–6	1545–0055
	1545–0795
	1545–1484
1.1441–7	1545–0795
1.1441–8	1545–1053
	1545–1484
1.1441–9	1545–1484
1.1443–1	1545–0096
1.1445–1	1545–0902
1.1445–2	1545–0902

CFR part or section where identified and described	Current OMB control No.
	1545–1060
	1545–1797
1.1445–3	1545–0902
	1545–1060
	1545–1797
1.1445–4	1545–0902
1.1445–5	1545–0902
1.1445–6	1545–0902
	1545–1060
1.1445–7	1545–0902
1.1445–8	1545–0096
1.1445–9T	1545–0902
1.1445–10T	1545–0902
1.1446–1	1545–1852
1.1446–3	1545–1852
1.1446–4	1545–1852
1.1446–5	1545–1852
1.1446–6T	1545–1934
1.1451–1	1545–0054
1.1451–2	1545–0054
1.1461–1	1545–0054
	1545–0055
	1545–0795
	1545–1484
1.1461–2	1545–0054
	1545–0055
	1545–0096
	1545–0795
1.1462–1	1545–0795
1.1492–1	1545–0026
1.1494–1	1545–0026
1.1502–5	1545–0257
1.1502–9	1545–1634
1.1502–9A	1545–0121
1.1502–13	1545–0123
	1545–0885
	1545–1161
	1545–1433
1.1502–16	1545–0123
1.1502–18	1545–0123
1.1502–19	1545–0123
1.1502–20	1545–1160
	1545–1218
	1545–1774
1.1502–20T	1545–1774
1.1502–21	1545–1237
1.1502–21T	1545–1790
1.1502–31	1545–1344
1.1502–32	1545–1344
	1545–1774
1.1502–32T	1545–1774
1.1502–33	1545–1344
1.1502–35	1545–1828
1.1502–47	1545–0123
1.1502–75	1545–0025
	1545–0123
	1545–0133
	1545–0152
1.1502–76	1545–1344
1.1502–77	1545–1699
1.1502–77A	1545–0123
	1545–1046
1.1502–78	1545–0582
1.1502–95	1545–1218
1.1502–95A	1545–1218
1.1502–96	1545–1218
1.1503–2	1545–1583
1.1503–2A	1545–1083
1.1552–1	1545–0123
1.1561–3	1545–0123
1.1563–1	1545–0123
	1545–0797
1.1563–3	1545–0123
1.6001–1	1545–0058
	1545–0074
	1545–0099
	1545–0123
	1545–0865
1.6011–1	1545–0055
	1545–0074
	1545–0085
	1545–0089
	1545–0090
	1545–0091
	1545–0096
	1545–0121
	1545–0458
	1545–0666
	1545–0675
	1545–0908
1.6011–2	1545–0055
	1545–0938
1.6011–3	1545–0238
	1545–0239
1.6011–4	1545–1685
1.6012–1	1545–0067
	1545–0085
	1545–0089
	1545–0675
	1545–0074
1.6012–2	1545–0047
	1545–0051
	1545–0067
	1545–0123
	1545–0126
	1545–0130
	1545–0128
	1545–0175
	1545–0687
	1545–0890
	1545–1023
	1545–1027
1.6012–3	1545–0047
	1545–0067
	1545–0092
	1545–0196
	1545–0687
1.6012–4	1545–0067
1.6012–5	1545–0067
	1545–0967
	1545–0970
	1545–0991
	1545–0936
	1545–1023
	1545–1033
	1545–1079
1.6012–6	1545–0067
	1545–0089
	1545–0129
1.6013–1	1545–0074
1.6013–2	1545–0091
1.6013–6	1545–0074
1.6013–7	1545–0074
1.6015–5	1545–1719
1.6015(a)–1	1545–0087
1.6015(b)–1	1545–0087
1.6015(d)–1	1545–0087
1.6015(e)–1	1545–0087
1.6015(f)–1	1545–0087
1.6015(g)–1	1545–0087
1.6015(h)–1	1545–0087
1.6015(i)–1	1545–0087
1.6017–1	1545–0074
	1545–0087

CFR part or section where identified and described	Current OMB control No.
	1545–0090
1.6031(a)–1	1545–1583
1.6031(b)–1T	1545–0099
1.6031(c)–1T	1545–0099
1.6032–1	1545–0099
1.6033–2	1545–0047
	1545–0049
	1545–0052
	1545–0092
	1545–0687
	1545–1150
1.6033–3	1545–0052
1.6034–1	1545–0092
	1545–0094
1.6035–1	1545–0704
1.6035–2	1545–0704
1.6035–3	1545–0704
1.6037–1	1545–0130
	1545–1023
1.6038–2	1545–1617
1.6038–3	1545–1617
1.6038A–2	1545–1191
1.6038A–3	1545–1191
	1545–1440
1.6038B–1	1545–1617
1.6038B–1T	1545–0026
1.6038B–2	1545–1617
1.6039–2	1545–0820
1.6041–1	1545–0008
	1545–0108
	1545–0112
	1545–0115
	1545–0120
	1545–0295
	1545–0350
	1545–0367
	1545–0387
	1545–0441
	1545–0957
	1545–1705
1.6041–2	1545–0008
	1545–0119
	1545–0350
	1545–0441
	1545–1729
1.6041–3	1545–1148
1.6041–4	1545–0115
	1545–0295
	1545–0367
	1545–0387
	1545–0957
1.6041–5	1545–0295
	1545–0367
	1545–0387
	1545–0957
1.6041–6	1545–0008
	1545–0115
1.6041–7	1545–0112
	1545–0295
	1545–0350
	1545–0367
	1545–0387
	1545–0441
	1545–0957
1.6042–1	1545–0110
1.6042–2	1545–0110
	1545–0295
	1545–0367
	1545–0387
	1545–0957
1.6042–3	1545–0295
	1545–0367

CFR part or section where identified and described	Current OMB control No.
	1545–0387
	1545–0957
1.6042–4	1545–0110
1.6043–1	1545–0041
1.6043–2	1545–0041
	1545–0110
	1545–0295
	1545–0387
1.6043–3	1545–0047
1.6044–1	1545–0118
1.6044–2	1545–0118
1.6044–3	1545–0118
1.6044–4	1545–0118
1.6044–5	1545–0118
1.6045–1	1545–0715
	1545–1705
1.6045–2	1545–0115
1.6045–4	1545–1085
1.6046–1	1545–0704
	1545–0794
	1545–1317
1.6046–2	1545–0704
1.6046–3	1545–0704
1.6046A	1545–1646
1.6047–1	1545–0119
	1545–0295
	1545–0387
1.6049–1	1545–0112
	1545–0117
	1545–0295
	1545–0367
	1545–0387
	1545–0597
	1545–0957
1.6049–2	1545–0117
1.6049–3	1545–0117
1.6049–4	1545–0096
	1545–0112
	1545–0117
	1545–1018
	1545–1050
1.6049–5	1545–0096
	1545–0112
	1545–0117
1.6049–6	1545–0096
1.6049–7	1545–1018
1.6049–7T	1545–0112
	1545–0117
	1545–0118
1.6050A–1	1545–0115
1.6050B–1	1545–0120
1.6050D–1	1545–0120
	1545–0232
1.6050E–1	1545–0120
1.6050H–1	1545–0901
	1545–1380
1.6050H–2	1545–0901
	1545–1339
	1545–1380
1.6050H–1T	1545–0901
1.6050I–2	1545–1449
1.6050J–1T	1545–0877
1.6050K–1	1545–0941
1.6050L–2T	1545–1932
1.6050S–1	1545–1678
1.6050S–2	1545–1729
1.6050S–3	1545–1678
1.6050S–4	1545–1729
1.6052–1	1545–0008
1.6052–2	1545–0008
1.6060–1	1545–0074
1.6061–1	1545–0123

CFR part or section where identified and described	Current OMB control No.
1.6062–1	1545–0123
1.6063–1	1545–0123
1.6065–1	1545–0123
1.6071–1	1545–0123
	1545–0810
1.6072–1	1545–0074
1.6072–2	1545–0123
	1545–0807
1.6073–1	1545–0087
1.6073–2	1545–0087
1.6073–3	1545–0087
1.6073–4	1545–0087
1.6074–1	1545–0123
1.6074–2	1545–0123
1.6081–1	1545–0066
	1545–0148
	1545–0233
	1545–1057
	1545–1081
1.6081–2	1545–0148
	1545–1054
	1545–1036
1.6081–3	1545–0233
1.6081–4	1545–0188
	1545–1479
1.6081–6	1545–0148
	1545–1054
1.6081–7	1545–0148
	1545–1054
1.6091–3	1545–0089
1.6107–1	1545–0074
1.6109–1	1545–0074
1.6109–2	1545–0074
1.6115–1	1545–1464
1.6151–1	1545–0074
1.6153–1	1545–0087
1.6153–4	1545–0087
1.6154–2	1545–0257
1.6154–3	1545–0135
1.6154–5	1545–0976
1.6161–1	1545–0087
1.6162–1	1545–0087
1.6164–1	1545–0135
1.6164–2	1545–0135
1.6164–3	1545–0135
1.6164–5	1545–0135
1.6164–6	1545–0135
1.6164–7	1545–0135
1.6164–8	1545–0135
1.6164–9	1545–0135
1.6302–1	1545–0257
1.6302–2	1545–0098
	1545–0257
1.6411–1	1545–0098
	1545–0135
	1545–0582
1.6411–2	1545–0098
	1545–0582
1.6411–3	1545–0098
	1545–0582
1.6411–4	1545–0582
1.6414–1	1545–0096
1.6425–1	1545–0170
1.6425–2	1545–0170
1.6425–3	1545–0170
1.6654–1	1545–0087
	1545–0140
1.6654–2	1545–0087
1.6654–3	1545–0087
1.6654–4	1545–0087
1.6655–1	1545–0142
1.6655–2	1545–0142
1.6655–3	1545–0142
1.6655–7	1545–0123
1.6655(e)–1	1545–1421
1.6662–3(c)	1545–0889
1.6662–4(e) and (f)	1545–0889
1.6662–6	1545–1426
1.6694–1	1545–0074
1.6694–2	1545–0074
1.6694–2(c)	1545–1231
1.6694–3(e)	1545–1231
1.6695–1	1545–0074
	1545–1385
1.6695–2	1545–1570
1.6696–1	1545–0074
	1545–0240
1.6851–1	1545–0086
	1545–0138
1.6851–2	1545–0086
	1545–0138
1.7476–1	1545–0197
1.7476–2	1545–0197
1.7519–2T	1545–1036
1.7520–1	1545–1343
1.7520–2	1545–1343
1.7520–3	1545–1343
1.7520–4	1545–1343
1.7701(l)–3	1545–1642
1.7872–15	1545–1792
1.9100–1	1545–0074
1.9101–1	1545–0008
2.1–4	1545–0123
2.1–5	1545–0123
2.1–6	1545–0123
2.1–10	1545–0123
2.1–11	1545–0123
2.1–12	1545–0123
2.1–13	1545–0123
2.1–20	1545–0123
2.1–22	1545–0123
2.1–26	1545–0123
3.2	1545–0123
4.954–1	1545–1068
4.954–2	1545–1068
5.6411–1	1545–0098
	1545–0582
	1545–0042
	1545–0074
	1545–0129
	1545–0172
	1545–0619
5c.44F–1	1545–0619
5c.128–1	1545–0123
5c.168(f)(8)–1	1545–0123
5c.168(f)(8)–2	1545–0123
5c.168(f)(8)–6	1545–0123
5c.168(f)(8)–8	1545–0123
5c.305–1	1545–0110
5c.442–1	1545–0152
5f.103–1	1545–0720
5f.103–3	1545–0720
5f.6045–1	1545–0715
6a.103A–2	1545–0123
	1545–0720
6a.103A–3	1545–0720
7.465–1	1545–0712
7.465–2	1545–0712
7.465–3	1545–0712
7.465–4	1545–0712
7.465–5	1545–0712
7.936–1	1545–0217
7.999–1	1545–0216
7.6039A–1	1545–0015

CFR part or section where identified and described	Current OMB control No.
7.6041–1	1545–0115
11.410–1	1545–0710
11.412(c)–7	1545–0710
11.412(c)–11	1545–0710
12.7	1545–0190
12.8	1545–0191
12.9	1545–0195
14a.422A–1	1545–0123
15A.453–1	1545–0228
16.3–1	1545–0159
16A.126–2	1545–0074
16A.1255–1	1545–0184
16A.1255–2	1545–0184
18.1371–1	1545–0130
18.1378–1	1545–0130
18.1379–1	1545–0130
18.1379–2	1545–0130
20.2011–1	1545–0015
20.2014–5	1545–0015
	1545–0260
20.2014–6	1545–0015
20.2016–1	1545–0015
20.2031–2	1545–0015
20.2031–3	1545–0015
20.2031–4	1545–0015
20.2031–6	1545–0015
20.2031–7	1545–0020
20.2031–10	1545–0015
20.2032–1	1545–0015
20.2032A–3	1545–0015
20.2032A–4	1545–0015
20.2032A–8	1545–0015
20.2039–4	1545–0015
20.2051–1	1545–0015
20.2053–3	1545–0015
20.2053–9	1545–0015
20.2053–10	1545–0015
20.2055–1	1545–0015
20.2055–2	1545–0015
	1545–0092
20.2055–3	1545–0015
20.2056(b)–4	1545–0015
20.2056(b)–7	1545–0015
	1545–1612
20.2056A–2	1545–1443
20.2056A–3	1545–1360
20.2056A–4	1545–1360
20.2056A–10	1545–1360
20.2106–1	1545–0015
20.2106–2	1545–0015
20.2204–1	1545–0015
20.2204–2	1545–0015
20.6001–1	1545–0015
20.6011–1	1545–0015
20.6018–1	1545–0015
	1545–0531
20.6018–2	1545–0015
20.6018–3	1545–0015
20.6018–4	1545–0015
	1545–0022
20.6036–2	1545–0015
20.6061–1	1545–0015
20.6065–1	1545–0015
20.6075–1	1545–0015
20.6081–1	1545–0015
	1545–0181
	1545–1707
20.6091–1	1545–0015
20.6161–1	1545–0015
	1545–0181
20.6161–2	1545–0015
	1545–0181
20.6163–1	1545–0015
20.6166–1	1545–0181
20.6166A–1	1545–0015
20.6166A–3	1545–0015
20.6324A–1	1545–0754
20.7520–1	1545–1343
20.7520–2	1545–1343
20.7520–3	1545–1343
20.7520–4	1545–1343
22.0	1545–0015
25.2511–2	1545–0020
25.2512–2	1545–0020
25.2512–3	1545–0020
25.2512–5	1545–0020
25.2512–9	1545–0020
25.2513–1	1545–0020
25.2513–2	1545–0020
	1545–0021
25.2513–3	1545–0020
25.2518–2	1545–0959
25.2522(a)–1	1545–0196
25.2522(c)–3	1545–0020
	1545–0196
25.2523(a)–1	1545–0020
	1545–0196
25.2523(f)–1	1545–0015
25.2701–2	1545–1241
25.2701–4	1545–1241
25.2701–5	1545–1273
25.2702–5	1545–1485
25.2702–6	1545–1273
25.6001–1	1545–0020
	1545–0022
25.6011–1	1545–0020
25.6019–1	1545–0020
25.6019–2	1545–0020
25.6019–3	1545–0020
25.6019–4	1545–0020
25.6061–1	1545–0020
25.6065–1	1545–0020
25.6075–1	1545–0020
25.6081–1	1545–0020
25.6091–1	1545–0020
25.6091–2	1545–0020
25.6151–1	1545–0020
25.6161–1	1545–0020
25.7520–1	1545–1343
25.7520–2	1545–1343
25.7520–3	1545–1343
25.7520–4	1545–1343
26.2601–1	1545–0985
26.2632–1	1545–0985
	1545–1892
26.2642–1	1545–0985
26.2642–2	1545–0985
26.2642–3	1545–0985
26.2642–4	1545–0985
26.2652–2	1545–0985
26.2662–1	1545–0015
	1545–0985
26.2662–2	1545–0985
31.3102–3	1545–0029
	1545–0059
	1545–0065
31.3121(b)(19)–1	1545–0029
31.3121(d)–1	1545–0004
31.3121(i)–1	1545–0034
31.3121(k)–4	1545–0137
31.3121(r)–1	1545–0029
31.3121(s)–1	1545–0029
31.3121(v)(2)–1	1545–1643
31.3302(a)–2	1545–0028

CFR part or section where identified and described	Current OMB control No.
31.3302(a)–3	1545–0028
31.3302(b)–2	1545–0028
31.3302(e)–1	1545–0028
31.3306(c)(18)–1	1545–0029
31.3401(a)–1	1545–0029
31.3401(a)(6)	1545–1484
31.3401(a)(6)–1	1545–0029
	1545–0096
	1545–0795
31.3401(a)(7)–1	1545–0029
31.3401(a)(8)(A)–1	1545–0029
	1545–0666
31.3401(a)(8)(C)–1	1545–0029
31.3401(a)(15)–1	1545–0182
31.3401(c)–1	1545–0004
31.3402(b)–1	1545–0010
31.3402(c)–1	1545–0010
31.3402(f)(1)–1	1545–0010
31.3402(f)(2)–1	1545–0010
	1545–0410
31.3402(f)(3)–1	1545–0010
31.3402(f)(4)–1	1545–0010
31.3402(f)(4)–2	1545–0010
31.3402(f)(5)–1	1545–0010
	1545–1435
31.3402(h)(1)–1	1545–0029
31.3402(h)(3)–1	1545–0010
31.3402(h)(3)–1	1545–0029
31.3402(h)(4)–1	1545–0010
31.3402(i)–(1)	1545–0010
31.3402(i)–(2)	1545–0010
31.3402(k)–1	1545–0065
31.3402(l)–(1)	1545–0010
31.3402(m)–(1)	1545–0010
31.3402(n)–(1)	1545–0010
31.3402(o)–2	1545–0415
31.3402(o)–3	1545–0008
	1545–0010
	1545–0415
	1545–0717
31.3402(p)–1	1545–0415
	1545–0717
31.3402(q)–1	1545–0238
	1545–0239
31.3404–1	1545–0029
31.3405(c)–1	1545–1341
31.3406(a)–1	1545–0112
31.3406(a)–2	1545–0112
31.3406(a)–3	1545–0112
31.3406(a)–4	1545–0112
31.3406(b)(2)–1	1545–0112
31.3406(b)(2)–2	1545–0112
31.3406(b)(2)–3	1545–0112
31.3406(b)(2)–4	1545–0112
31.3406(b)(2)–5	1545–0112
31.3406(b)(3)–1	1545–0112
31.3406(b)(3)–2	1545–0112
31.3406(b)(3)–3	1545–0112
31.3406(b)(3)–4	1545–0112
31.3406(b)(4)–1	1545–0112
31.3406(c)–1	1545–0112
31.3406(d)–1	1545–0112
31.3406(d)–2	1545–0112
31.3406(d)–3	1545–0112
31.3406(d)–4	1545–0112
31.3406(d)–5	1545–0112
31.3406(e)–1	1545–0112
31.3406(f)–1	1545–0112
31.3406(g)–1	1545–0096
	1545–0112
	1545–1819
31.3406(g)–2	1545–0112
31.3406(g)–3	1545–0112
31.3406(h)–1	1545–0112
31.3406(h)–2	1545–0112
31.3406(h)–3	1545–0112
31.3406(i)–1	1545–0112
31.3501(a)–1T	1545–0771
31.3503–1	1545–0024
31.3504–1	1545–0029
31.6001–1	1545–0798
31.6001–2	1545–0034
	1545–0798
31.6001–3	1545–0798
31.6001–4	1545–0028
31.6001–5	1545–0798
31.6001–6	1545–0029
	1459–0798
31.6011(a)–1	1545–0029
	1545–0034
	1545–0035
	1545–0059
	1545–0074
	1545–0718
	1545–0256
31.6011(a)–2	1545–0001
	1545–0002
31.6011(a)–3	1545–0028
31.6011(a)–3A	1545–0955
31.6011(a)–4	1545–0034
	1545–0035
	1545–0718
	1545–1413
31.6011(a)–5	1545–0718
	1545–0028
31.6011(a)–6	1545–0028
31.6011(a)–7	1545–0074
31.6011(a)–8	1545–0028
31.6011(a)–9	1545–0028
31.6011(a)–10	1545–0112
31.6011(b)–1	1545–0003
31.6011(b)–2	1545–0029
31.6051–1	1545–0008
	1545–0182
	1545–0458
	1545–1729
31.6051–2	1545–0008
31.6051–3	1545–0008
31.6053–1	1545–0029
	1545–0062
	1545–0064
	1545–0065
	1545–1603
31.6053–2	1545–0008
31.6053–3	1545–0065
	1545–0714
31.6053–4	1545–0065
	1545–1603
31.6065(a)–1	1545–0029
31.6071(a)–1	1545–0001
	1545–0028
	1545–0029
31.6071(a)–1A	1545–0955
31.6081(a)–1	1545–0008
	1545–0028
31.6091–1	1545–0028
	1545–0029
31.6157–1	1545–0955
31.6205–1	1545–0029
31.6301(c)–1AT	1545–0035
	1545–0112
	1545–0257
31.6302–1	1545–1413
31.6302–2	1545–1413

CFR part or section where identified and described	Current OMB control No.
31.6302–3	1545–1413
31.6302–4	1545–1413
31.6302(c)–2	1545–0001
	1545–0257
31.6302(c)–2A	1545–0955
31.6302(c)–3	1545–0257
31.6402(a)–2	1545–0256
31.6413(a)–1	1545–0029
31.6413(a)–2	1545–0029
	1545–0256
31.6413(c)–1	1545–0029
	1545–0171
31.6414–1	1545–0029
32.1	1545–0029
	1545–0415
32.2	1545–0029
35a.3406–2	1545–0112
35a.9999–5	1545–0029
36.3121(l)(1)–1	1545–0137
36.3121(l)(1)–2	1545–0137
36.3121(l)(3)–1	1545–0123
36.3121(1)(7)–1	1545–0123
36.3121(1)(10)–1	1545–0029
36.3121(1)(10)–3	1545–0029
36.3121(1)(10)–4	1545–0257
40.6302(c)–3(b)(2)(ii)	1545–1296
40.6302(c)–3(b)(2)(iii)	1545–1296
40.6302(c)–3(e)	1545–1296
40.6302(c)–3(f)(2)(ii)	1545–1296
41.4481–1	1545–0143
41.4481–2	1545–0143
41.4483–3	1545–0143
41.6001–1	1545–0143
41.6001–2	1545–0143
41.6001–3	1545–0143
41.6071(a)–1	1545–0143
41.6081(a)–1	1545–0143
41.6091–1	1545–0143
41.6109–1	1545–0143
41.6151(a)–1	1545–0143
41.6156–1	1545–0143
41.6161(a)(1)–1	1545–0143
44.4401–1	1545–0235
44.4403–1	1545–0235
44.4412–1	1545–0236
44.4901–1	1545–0236
44.4905–1	1545–0236
44.4905–2	1545–0236
44.6001–1	1545–0235
44.6011(a)–1	1545–0235
	1545–0236
44.6071–1	1545–0235
44.6091–1	1545–0235
44.6151–1	1545–0235
44.6419–1	1545–0235
44.6419–1	1545–0235
44.6419–2	1545–0235
46.4371–4	1545–0023
46.4374–1	1545–0023
46.4701–1	1545–0023
	1545–0257
48.4041–4	1545–0023
48.4041–5	1545–0023
48.4041–6	1545–0023
48.4041–7	1545–0023
48.4041–9	1545–0023
48.4041–10	1545–0023
48.4041–11	1545–0023
48.4041–12	1545–0023
48.4041–13	1545–0023
48.4041–18	1545–0023
48.4041–19	1545–0023
48.4041–20	1545–0023
48.4041–21	1545–1270
48.4042–2	1545–0023
48.4052–1	1545–1418
48.4061(a)–1	1545–0023
48.4061(a)–2	1545–0023
48.4061(b)–3	1545–0023
48.4064–1	1545–0014
	1545–0242
48.4071–1	1545–0023
48.4073–1	1545–0023
48.4073–3	1545–0023
	1545–1074
	1545–1087
48.4081–2	1545–1270
	1545–1418
48.4081–3	1545–1270
	1545–1418
48.4081–3T	1545–1897
48.4081–4(b)(2)(ii)	1545–1270
48.4081–4(b)(3)(i)	1545–1270
48.4081–4(c)	1545–1270
48.4081–6(c)(1)(ii)	1545–1270
48.4081–7	1545–1270
	1545–1418
48.4082–1T	1545–1418
48.4082–2	1545–1418
48.4082–6	1545–1418
48.4082–7	1545–1418
48.4091–3	1545–1418
48.4101–1	1545–1418
48.4101–1T	1545–1418
48.4101–2	1545–1418
48.4161(a)–1	1545–0723
48.4161(a)–2	1545–0723
48.4161(a)–3	1545–0723
48.4161(b)–1	1545–0723
	1545–0723
48.4216(a)–2	1545–0023
48.4216(a)–3	1545–0023
48.4216(c)–1	1545–0023
48.4221–1	1545–0023
48.4221–2	1545–0023
48.4221–3	1545–0023
48.4221–4	1545–0023
48.4221–5	1545–0023
48.4221–6	1545–0023
48.4221–7	1545–0023
48.4222(a)–1	1545–0023
	1545–0014
48.4223–1	1545–0023
	1545–0723
	1545–0723
	1545–0723
	1545–0257
48.6302(c)–1	1545–0023
	1545–0257
48.6412–1	1545–0723
48.6416(a)–1	1545–0023
	1545–0723
48.6416(a)–2	1545–0723
48.6416(a)–3	1545–0723
48.6416(b)(2)–3	1545–1087
48.6416(b)(1)–1	1545–0723
48.6416(b)(1)–2	1545–0723
48.6416(b)(1)–3	1545–0723
48.6416(b)(1)–4	1545–0723
48.6416(b)(2)–1	1545–0723
48.6416(b)(2)–2	1545–0723
48.6416(b)(2)–3	1545–0723
	1545–1087
48.6416(b)(2)–4	1545–0723

CFR part or section where identified and described	Current OMB control No.
48.6416(b)(3)–1	1545–0723
48.6416(b)(3)–2	1545–0723
48.6416(b)(3)–3	1545–0723
48.6416(b)(4)–1	1545–0723
48.6416(b)(5)–1	1545–0723
48.6416(c)–1	1545–0723
48.6416(e)–1	1545–0023
	1545–0723
48.6416(f)–1	1545–0023
	1545–0723
48.6416(g)–1	1545–0723
48.6416(h)–1	1545–0723
48.6420(c)–2	1545–0023
48.6420(f)–1	1545–0023
48.6420–1	1545–0162
	1545–0723
48.6420–2	1545–0162
	1545–0723
48.6420–3	1545–0162
	1545–0723
48.6420–4	1545–0162
	1545–0723
48.6420–5	1545–0162
	1545–0723
48.6420–6	1545–0162
	1545–0723
48.6421–0	1545–0162
	1545–0723
48.6421–1	1545–0162
	1545–0723
48.6421–2	1545–0162
	1545–0723
48.6421–3	1545–0162
	1545–0723
48.6421–4	1545–0162
	1545–0723
48.6421–5	1545–0162
	1545–0723
48.6421–6	1545–0162
	1545–0723
48.6421–7	1545–0162
	1545–0723
48.6424–0	1545–0723
48.6424–1	1545–0723
48.6424–2	1545–0723
48.6424–3	1545–0723
48.6424–4	1545–0723
48.6424–5	1545–0723
48.6424–6	1545–0723
48.6427–0	1545–0723
48.6427–1	1545–0023
	1545–0162
	1545–0723
48.6427–2	1545–0162
	1545–0723
48.6427–3	1545–0723
48.6427–4	1545–0723
48.6427–5	1545–0723
48.6427–8	1545–1418
48.6427–9	1545–1418
48.6427–10	1545–1418
48.6427–11	1545–1418
49.4251–1	1545–1075
49.4251–2	1545–1075
49.4251–4(d)(2)	1545–1628
49.4253–3	1545–0023
49.4253–4	1545–0023
49.4264(b)–1	1545–0023
	1545–0226
	1545–0226
	1545–0912
	1545–0912

CFR part or section where identified and described	Current OMB control No.
	1545–0257
	1545–0230
	1545–0224
	1545–0225
	1545–0224
	1545–0230
49.4271–1(d)	1545–0685
52.4682–1(b)(2)(iii)	1545–1153
52.4682–2(b)	1545–1153
	1545–1361
52.4682–2(d)	1545–1153
	1545–1361
52.4682–3(c)(2)	1545–1153
52.4682–3(g)	1545–1153
52.4682–4(f)	1545–1153
	1545–0257
52.4682–5(d)	1545–1361
52.4682–5(f)	1545–1361
53.4940–1	1545–0052
	1545–0196
53.4942(a)–1	1545–0052
53.4942(a)–2	1545–0052
53.4942(a)–3	1545–0052
53.4942(b)–3	1545–0052
53.4945–1	1545–0052
53.4945–4	1545–0052
53.4945–5	1545–0052
53.4945–6	1545–0052
53.4947–1	1545–0196
53.4947–2	1545–0196
53.4948–1	1545–0052
53.4958–6	1545–1623
53.4961–2	1545–0024
53.4963–1	1545–0024
53.6001–1	1545–0052
53.6011–1	1545–0049
	1545–0052
	1545–0092
	1545–0196
53.6065–1	1545–0052
53.6071–1	1545–0049
53.6081–1	1545–0066
	1545–0148
53.6161–1	1545–0575
54.4972–1	1545–0197
54.4975–7	1545–0575
54.4977–1T	1545–0771
54.4980B–6	1545–1581
54.4980B–7	1545–1581
54.4980B–8	1545–1581
54.4980F–1	1545–1780
54.4981A–1T	1545–0203
54.6011–1	1545–0575
54.6011–1T	1545–0575
54.9801–3	1545–1537
54.9801–4	1545–1537
54.9801–5	1545–1537
54.9801–6	1545–1537
55.6001–1	1545–0123
55.6011–1	1545–0999
	1545–0123
	1545–1016
55.6061–1	1545–0999
55.6071–1	1545–0999
56.4911–6	1545–0052
56.4911–7	1545–0052
56.4911–9	1545–0052
56.4911–10	1545–0052
56.6001–1	1545–1049
56.6011–1	1545–1049
56.6081–1	1545–1049
56.6161–1	1545–1049

CFR part or section where identified and described	Current OMB control No.
	1545–0257
145.4051–1	1545–0745
145.4052–1	1545–0120
	1545–0745
	1545–1076
	1545–0745
	1545–1076
145.4061–1	1545–0745
	1545–0257
	1545–0230
	1545–0224
156.6001–1	1545–1049
156.6011–1	1545–1049
156.6081–1	1545–1049
156.6161–1	1545–1049
157.6001–1	1545–1824
157.6011–1	1545–1824
157.6081–1	1545–1824
157.6161–1	1545–1824
301.6011–2	1545–0225
	1545–0350
	1545–0387
	1545–0441
	1545–0957
301.6017–1	1545–0090
301.6034–1	1545–0092
301.6035–1	1545–0123
301.6036–1	1545–0013
	1545–0773
301.6047–1	1545–0367
	1545–0957
301.6057–1	1545–0710
301.6057–2	1545–0710
301.6058–1	1545–0710
301.6059–1	1545–0710
301.6103(c)–1	1545–1816
301.6103(n)–1	1545–1841
301.6103(p)(2)(B)–1	1545–1757
301.6104(a)–1	1545–0495
301.6104(a)–5	1545–0056
301.6104(a)–6	1545–0056
301.6104(b)–1	1545–0094
	1545–0742
301.6104(d)–1	1545–1655
301.6104(d)–2	1545–1655
301.6104(d)–3	1545–1655
301.6109–1	1545–0003
	1545–0295
	1545–0367
	1545–0387
	1545–0957
	1545–1461
301.6109–3	1545–1564
301.6110–3	1545–0074
301.6110–5	1545–0074
301.6111–1T	1545–0865
	1545–0881
301.6111–2	1545–0865
	1545–1687
301.6112–1	1545–0865
	1545–1686
301.6112–1T	1545–0865
	1545–1686
301.6114–1	1545–1126
	1545–1484
301.6222(a)–2	1545–0790
301.6222(b)–1	1545–0790
301.6222(b)–2	1545–0790
301.6222(b)–3	1545–0790
301.6223(b)–1	1545–0790
301.6223(c)–1	1545–0790
301.6223(e)–2	1545–0790
301.6223(g)–1	1545–0790
301.6223(h)–1	1545–0790
301.6224(b)–1	1545–0790
301.6224(c)–1	1545–0790
301.6224(c)–3	1545–0790
301.6227(c)–1	1545–0790
301.6227(d)–1	1545–0790
301.6229(b)–2	1545–0790
301.6230(b)–1	1545–0790
301.6230(e)–1	1545–0790
301.6231(a)(1)–1	1545–0790
301.6231(a)(7)–1	1545–0790
301.6231(c)–1	1545–0790
301.6231(c)–2	1545–0790
301.6241–1T	1545–0130
301.6316–4	1545–0074
301.6316–5	1545–0074
301.6316–6	1545–0074
301.6316–7	1545–0029
301.6324A–1	1545–0015
301.6361–1	1545–0074
	1545–0024
301.6361–2	1545–0024
301.6361–3	1545–0074
301.6402–2	1545–0024
	1545–0073
	1545–0091
301.6402–3	1545–0055
	1545–0073
	1545–0091
	1545–0132
	1545–1484
301.6402–5	1545–0928
301.6404–1	1545–0024
301.6404–2T	1545–0024
301.6404–3	1545–0024
301.6405–1	1545–0024
301.6501(c)–1	1545–1241
	1545–1637
301.6501(d)–1	1545–0074
	1545–0430
301.6501(o)–2	1545–0728
301.6511(d)–1	1545–0582
	1545–0024
301.6511(d)–2	1545–0582
	1545–0024
301.6511(d)–3	1545–0024
	1545–0582
301.6652–2	1545–0092
301.6685–1	1545–0092
301.6689–1T	1545–1056
301.6707–1T	1545–0865
	1545–0881
301.6708–1T	1545–0865
301.6712–1	1545–1126
301.6723–1A(d)	1545–0909
301.6903–1	1545–0013
	1545–1783
301.6905–1	1545–0074
301.7001–1	1545–0123
301.7101–1	1545–1029
301.7207–1	1545–0092
301.7216–2	1545–0074
301.7216–2(o)	1545–1209
301.7425–3	1545–0854
301.7430–2(c)	1545–1356
301.7507–8	1545–0123
301.7507–9	1545–0123
301.7513–1	1545–0429
301.7517–1	1545–0015
301.7605–1	1545–0795
301.7623–1	1545–0409

CFR part or section where identified and described	Current OMB control No.
	1545–1534
301.7654–1	1545–0803
301.7701–3	1545–1486
301.7701–4	1545–1465
301.7701–7	1545–1600
301.7701–16	1545–0795
301.7701(b)–1	1545–0089
301.7701(b)–2	1545–0089
301.7701(b)–3	1545–0089
301.7701(b)–4	1545–0089
301.7701(b)–5	1545–0089
301.7701(b)–6	1545–0089
301.7701(b)–7	1545–0089
	1545–1126
301.7701(b)–9	1545–0089
301.7805–1	1545–0805
301.9001–1	1545–0220
301.9000–5	1545–1850
301.9100–2	1545–1488
301.9100–3	1545–1488
301.9100–4T	1545–0016
	1545–0042
	1545–0074
	1545–0129
	1545–0172
	1545–0619
301.9100–6T	1545–0872
301.9100–7T	1545–0982
301.9100–8	1545–1112
301.9100–11T	1545–0123
301.9100–12T	1545–0026
	1545–0074
	1545–0172
	1545–1027
301.9100–14T	1545–0046
301.9100–15T	1545–0046
301.9100–16T	1545–0152
302.1–7	1545–0024
305.7701–1	1545–0823
305.7871–1	1545–0823
404.6048–1	1545–0160
420.0–1	1545–0710
Part 509	1545–0846
Part 513	1545–0834
Part 514	1545–0845
Part 521	1545–0848
601.104	1545–0233
601.105	1545–0091
601.201	1545–0019
	1545–0819
601.204	1545–0152
601.401	1545–0257
601.504	1545–0150
601.601	1545–0800
601.602	1545–0295
	1545–0387
	1545–0957
601.702	1545–0429

(26 U.S.C. 7805)

[T.D. 8011, 50 FR 10222, Mar. 14, 1985]

EDITORIAL NOTE: For FEDERAL REGISTER citations affecting §602.101, see the List of CFR Sections Affected, which appears in the Findings Aids section of the printed volume and on GPO Access.

List of CFR Sections Affected

All changes in sections of part 1 (§1.1401 to end) of title 26 of the Code of Federal Regulations that were made by documents published in the FEDERAL REGISTER since January 1, 2001, are enumerated in the following list. Entries indicate the nature of the changes effected. Page numbers refer to FEDERAL REGISTER pages. The user should consult the entries for chapters and parts as well as sections for revisions.

For the period before January 1, 2001, see the ''List of CFR Sections Affected, 1949–1963, 1964–1972, 1973–1985, 1986–2000'' published in 11 separate volumes.

2001

26 CFR

66 FR Page

Chapter I

1.1441–1 (b)(3)(ii)(C) and (e)(5)(V)(C)(*2*) correctly revised; (b)(3)(vi), (vii)(B), (c)(14), (e)(3)(iii)(D), (iv)(C)(*1*), (*2*), (D)(*2*) and (*3*) corrected 18188

1.1441–5 (e)(5)(*ii*) correctly designated as (e)(5)(ii); new (e)(5)(ii) corrected 18188

1.1441–7 (b)(4)(i) correctly revised; (b)(5)(i)(A)(*1*) and (10)(ii) corrected 18189

1.1461–1 Heading, (c)(1)(ii)(A)(*1*), (2)(i) and (ii)(H) corrected; (c)(2)(i)(M) correctly removed; (c)(2)(i)(N) correctly designated as (c)(2)(i)(M) 18189

(a)(1) amended 33831

1.1502–5 (a)(1) amended 33831

1.1502–34 Amended 32902

1.1502–75 (k) corrected; CFR correction 9651

(k) amended 9929

1.1502–76 (b)(1)(ii)(A)(*1*) amended 9929

(b)(1)(ii)(B)(3) amended 9957

1.1502–78 (e) added 33463

1.1502–78T Added 715

Removed 33464

2002

26 CFR

67 FR Page

Chapter I

1.1441–0 Amended 70312

26 CFR—Continued

67 FR Page

Chapter I—Continued

1.1441–1 (b)(7)(i)(D) added 70312

1.1441–1T Added (temporary) 2328

Removed 70312

1.1441–6 (b)(1) amended (temporary) 2328

(g) redesignated as (h); new (g) added; (b)(1) and new (h)(2) amended; new (h) heading and (1) revised 70312

1.1441–6T Added (temporary) 2328

Removed 70313

1.1502–6 (b) amended 43540

1.1502–13 (a)(3)(i) amended 76985

1.1502–20 (i) added 11037

1.1502–20T Added 11037

(i)(3)(v) and (i)(4) revised 38000

1.1502–21 (b)(3)(ii)(C) added 38002

1.1502–21T Added 38002

1.1502–32 (b)(4)(v) added 11040

1.1502–32T Added 11040

1.1502–41B Undesignated center heading added 43540

1.1502–77 Redesignated as 1.1502–77A; new 1.1502–77 added 43540

1.1502–77A Redesignated from 1.1502–77; Heading revised; (a) through (d) amended; (e) removed; (f) and (g) added 43540

(e) redesignated from 1.1502–77T (a) 43544

1.1502–77T (a) redesignated as 1.1502–77A(e); removed 43544

1.1502–78 (a) revised; (b)(1), (2), (c) *Examples* 1, 2 and 3 amended; (e)(2)(v) removed; (f) added 43544

Regulation at 67 FR 43544 corrected 77678

26 CFR—Continued

67 FR Page

Chapter I—Continued

1.1502–79A Undesignated center heading added 43545

2003

26 CFR

68 FR Page

Chapter I

1.1402(a)–18 Added 54352

1.1445–1 (c)(1), (2)(i)(B), (d)(1)(i), (ii), (2)(i), (iv)(B), (vi)(B), (f)(2) and (3)(i) amended; (g)(9) and (10) revised; (h) added 46084

1.1445–2 (b)(2)(iii) redesignated as (b)(2)(iv); new (b)(2)(iii), (d)(2)(iii), (iv) and (e) added; new (b)(2)(iv)(B) revised; (d)(2)(i)(B), (3)(iii)(A)(*2*) and (*3*) amended 46084

1.1445–3 (a), (b)(1), (f)(1), (2)(iii), (3)(i), (g) introductory text and (1) amended; (b)(2) revised; (b)(5), (6) and (h) added 46085

1.1445–4 (c)(2) amended 46086

1.1445–5 (e)(2) redesignated as (e)(3); (b)(2)(ii), (B), (C), (5)(i), (7), (c)(3)(v) and new (e)(3)(iii)(B) amended; (b)(8)(iii) and (e)(1)(ii) revised; new (e)(2) and (h) added 46086

1.1445–6 Heading and (b)(3) revised; (a), (f)(1), (2)(iii), (f)(3)(i), (g) introductory text and (1) amended; (h) added 46086

1.1445–9T Removed 46087

1.1502–11 (b)(3)(ii) *Example* amended 12290

1.1502–12 (r) amended 12291

1.1502–13 (f)(7) *Example 1* amended 12291

1.1502–15 (b)(2)(iii) amended 12291

1.1502–19 (b)(1), (h)(2) heading and (i) heading revised; (h)(2)(ii) redesignated as (h)(2)(iii); new (h)(2)(ii) added 52490

1.1502–19T Added 52490

1.1502–20T (i)(5) redesignated as (i)(6); (i)(3)(viii) and new (i)(5) added 24353

1.1502–21 (b)(1) revised; (b)(2)(i) amended; (b)(3)(v) and (h)(7) added 12291

(h)(6) and (7) redesignated as (h)(7) and (8); (b)(2)(iv), (c)(2)(vii) and new (h)(8) revised; new (h)(6) added 52491

26 CFR—Continued

68 FR Page

Chapter I—Continued

(b)(2)(iii), (3)(i) and (ii)(B) revised 70706

1.1502–21T Revised 12291

(b)(2) through (b)(3)(iv) corrected 16430

(b)(1) through (3)(ii)(B) and (c) through (h)(7) revised; (h)(8) added 52491

(b)(2)(iii) and (3) through (ii)(B) revised 70706

1.1502–28T Added 52492

(a)(4) and (d) revised 69025

1.1502–32 (a)(2) revised; (b)(3)(iii)(B), (b)(5)(ii) *Example 2*, and (e)(2) *Example 4* amended; (b)(3)(iii)(C), (D), (b)(4)(vi), and (h)(6) added 12291

(b)(3)(ii)(C)(*1*) and (iii)(A) revised; (b)(4)(vii) and (h)(7) added; (b)(5)(ii) *Example 4* amended 52495

1.1502–32T Revised 12291

(b)(4) through (b)(4)(v) corrected 16431

(b)(4)(vii) added 24354

(b) introductory text through (3)(iii)(B), (4) introductory text through (iv) and (c) through (h)(5)(ii) revised; (h)(7) added 52495

1.1502–35T Added 12292

(b)(3)(i)(C), (ii)(B), (6)(ii), (e) and (f)(1) corrected; (b)(3)(ii)(C) correctly designated as (b)(3)(ii)(D); new (b)(3)(ii)(C) correctly added 16431

(b)(2)(ii)(B) corrected 24880

(b)(3)(ii)(B) through (E) corrected 33382

1.1502–75 (h)(2) revised 70707

1.1502–75T Added 70707

1.1502–80 (c) amended 12291

1.1502–91 (h)(2) amended 12291

1.1503–2 (g)(2)(iv)(B)(*1*)(*ii*) removed; (g)(2)(iv)(B)(*1*)(*iii*), (*iv*), (*2*) introductory text and (*iii*) redesignated as new (g)(2)(iv)(B)(*1*)(*ii*), (*iii*), (*3*) introductory text and (*iii*); (g)(2)(iv)(B)(*1*) introductory text, (*i*) introductory text and (*iii*) revised; new (g)(2)(iv)(B)(*2*) and (D) added; (h)(1) amended 44617

(g)(2)(i), (iv)(B)(3)(iii) and (vi)(B) revised 70707

26 CFR—Continued

68 FR
Page

Chapter I—Continued
1.1503–2T Added 70707

2004

26 CFR

69 FR
Page

Chapter I
1.1502–13 (g)(3)(ii)(B) revised 12071
1.1502–13T Added (temporary) 12071
1.1502–20T (i)(4) amended; (i)(6) redesignated as (i)(7); new (i)(6) added 52421
1.1502–21 Corrected 5017
1.1502–21T Corrected 5017
1.1502–28T (b)(4), (5) and (6) added; (d) revised 12071
1.1502–31 (b)(2), (d)(2)(ii), (g) and (h) revised 22400
1.1502–32T (b)(4)(v)(A) and (C) revised 51176
(b)(4)(vii)(C) amended 52421
1.1502–35T (c)(5)(i) corrected 1918
(f)(1) revised 12801
(f)(1) corrected 25315
1.1502–80 (c) amended 12801
1.1502–80T Added 12801
1.1503–2 Corrected 5248

2005

26 CFR

70 FR
Page

Chapter I
1.1402(a)–11 (b) revised 18946
1.1402(a)–12 Revised 18946
1.1402(a)–12T Added 18946
1.1443-1 (a) and (c)(1) revised 28717
1.1446-0 Added 28717
1.1446-1 Added 28717
1.1446-2 Added 28717
1.1446-3 Added 28717
1.1446-4 Added 28717
1.1446-5 Added 28717
1.1446-6T Added 28717
1.1446-7 Added 28717
1.1461-1 (a)(1), (c)(1)(i), (2)(i) and (3) amended; (c)(1)(ii)(A)(*8*) redesignated as (c)(1)(ii)(A)(*9*); new (c)(1)(ii)(A)(*8*) added; (i) revised 28740
1.1461-2 (a)(1) amended; (b) and (d) revised 28741
1.1461-3 Added 28741
1.1462-1 (b) and (c) revised 28741
1.1463-1 (a) amended; (b) revised 28741

26 CFR—Continued

70 FR
Page

Chapter I—Continued
1.1502.11 (b)(3)(ii)(c) amended; eff. 4-4-05 10327
(b)(1) revised; (c) redesignated as (d); new (c) added 14399
(c)(5) *Example 3* amended 20049
1.1502-12 (r) amended; eff. 4-4-05 10327
1.1502–13 (g)(3)(i)(A) amended; (g)(3)(ii)(B) revised; (g)(3)(ii)(C) added 14403
1.1502–13T Removed 14403
1.1502-15 (b)(2)(iii) amended; eff. 4-4-05 10327
1.1502–19 (b)(1) and (h)(2)(ii) revised 14403
1.1502–19T Removed 14403
1.1502-20 (i) revised; eff. 4-4-05 10322
(i)(3)(iii)(D)(*1*), (*2*), (*3*) and (*4*) corrected 12439
(i)(3)(viii) correctly amended 15227
1.1502–20T (i) removed; eff. 4-4-05 10325
1.1502–21 (b)(1), (2)(ii)(A), (iv), (c)(2)(vii) and (h)(6) revised 14403
1.1502–21T (a) through (b)(2)(v) and (c)(1) through (h)(7) revised 14404
1.1502–28 Added 14404
1.1502–28T Removed 14410
1.1502-32 (b)(4)(v) and (vii) revised; eff. 4-4-05 10325
(b)(1)(ii) redesignated as (b)(1)(iii); new (b)(1)(ii) added; (b)(3)(ii)(C)(*1*), (iii)(A) and (h)(7) revised; (b)(5)(ii) *Example 4* amended 14410
1.1502–32T (b)(4)(v) and (vii) revised; eff. 4-4-05 10326
(a)(3) added; (b) through (b)(3)(iii)(B), (5)(i) through (h)(5)(ii) and (7) revised 14411
1.1502–35T (b)(6)(ii) and (c)(9) amended; eff. 4-4-05 10327
1.1502–76 (b)(1)(ii)(B)(*3*) revised 14411
1.1502–80 (c) amended 14411
1.1502–80T (c) amended 14411
1.1502-91 (h)(2) amended; eff. 4-4-05 10327

2006

(Regulations published January 1, 2006, through April 1, 2006)

26 CFR

71 FR Page

Chapter I

1.1441–1 (b)(2)(iv)(A) revised; (b)(3)(iii)(E) and (c)(30) added; (e)(4)(vii)(G) removed; (e)(4)(vii)(H) and (I) redesignated as new (e)(4)(vii)(G) and (H) 13005
1.1441–3 (c)(3) and (e)(2) revised 13006
1.1441–6 (b)(1) revised 13006
1.1502-11 (b)(3)(ii) amended 13018
1.1502–12 (r) amended 13018
1.1502–15 (b)(2)(iii) amended 13018
1.1502–19 (d), (g) *Example 2* and (h) heading revised; (h)(2)(iv) added; (h)(3) amended 4274
(h) technical correction 13767
1.1502–19T Revised 4274

26 CFR—Continued

71 FR Page

Chapter I—Continued

Correctly added 13767
1.1502–21 (b)(1) amended; (b)(3)(v) and (h)(8) revised 13009
(b)(1) amended 13018
1.1502–21T (b)(3)(v) and (h)(8) removed 13009
1.1502–32 (b)(5)(ii) *Example 6* revised; (h)(1) amended; (h)(8) added 4275
(a)(2), (b)(3)(iii)(C), (D), (4)(vi) and (h)(6) revised 13009
(b)(3)(iii)(B) amended 13018
1.1502–32T Removed 13010
1.1502–35 Added 13010
1.1502–35T Removed 13018
1.1502–77 (j) added 13002
1.1502–77T Added 13002
1.1502–80 (c) amended 13018
1.1502–80T (c) amended 13018
1.1502–91 (h)(2) amended 13018