AUTHENTICATED
U.S. GOVERNMENT
INFORMATION
GPO

SUBCHAPTER C—AIR PROGRAMS (CONTINUED)

PART 86—CONTROL OF EMISSIONS FROM NEW AND IN-USE HIGHWAY VEHICLES AND ENGINES

Sec.
86.1 Reference materials.

Subpart A—General Provisions for Emission Regulations for 1977 and Later Model Year New Light-Duty Vehicles, Light-Duty Trucks and Heavy-Duty Engines, and for 1985 and Later Model Year New Gasoline Fueled, Natural Gas-Fueled, Liquefied Petroleum Gas-Fueled and Methanol-Fueled Heavy-Duty Vehicles

86.000–2 Definitions.
86.000–3 Abbreviations.
86.000–7 Maintenance of records; submittal of information; right of entry.
86.000–8 Emission standards for 2000 and later model year light-duty vehicles.
86.000–9 Emission standards for 2000 and later model year light-duty trucks.
86.000–15 NO_X and particulate averaging, trading, and banking for heavy-duty engines.
86.000–16 Prohibition of defeat devices.
86.000–21 Application for certification.
86.000–23 Required data.
86.000–24 Test vehicles and engines.
86.000–25 Maintenance.
86.000–26 Mileage and service accumulation; emission measurements.
86.000–28 Compliance with emission standards.
86.001–1 General applicability.
86.001–2 Definitions.
86.001–9 Emission standards for 2001 and later model year light-duty trucks.
86.001–21 Application for certification.
86.001–22 Approval of application for certification; test fleet selections; determinations of parameters subject to adjustment for certification and Selective Enforcement Audit, adequacy of limits, and physically adjustable ranges.
86.001–23 Required data.
86.001–24 Test vehicles and engines.
86.001–25 Maintenance.
86.001–26 Mileage and service accumulation; emission measurements.
86.001–28 Compliance with emission standards.
86.001–30 Certification.
86.001–35 Labeling.
86.004–2 Definitions.
86.004–9 Emission standards for 2004 and later model year light-duty trucks.
86.004–11 Emission standards for 2004 and later model year diesel heavy-duty engines and vehicles.
86.004–15 NO_X plus NMHC and particulate averaging, trading, and banking for heavy-duty engines.
86.004–16 Prohibition of defeat devices.
86.004–21 Application for certification.
86.004–25 Maintenance.
86.004–26 Mileage and service accumulation; emission measurements.
86.004–28 Compliance with emission standards.
86.004–30 Certification.
86.004–38 Maintenance instructions.
86.004–40 Heavy-duty engine rebuilding practices.
86.005–1 General applicability.
86.005–10 Emission standards for 2005 and later model year Otto-cycle heavy-duty engines and vehicles.
86.005–17 On-board diagnostics.
86.007–11 Emission standards and supplemental requirements for 2007 and later model year diesel heavy-duty engines and vehicles.
86.007–15 NO_X and particulate averaging, trading, and banking for heavy-duty engines.
86.007–21 Application for certification.
86.007–23 Required data.
86.007–25 Maintenance.
86.007–35 Labeling.
86.007–38 Maintenance instructions.
86.008–10 Emission standards for 2008 and later model year Otto-cycle heavy-duty engines and vehicles.
86.078–3 Abbreviations.
86.078–6 Hearings on certification.
86.079–31 Separate certification.
86.079–32 Addition of a vehicle or engine after certification.
86.079–33 Changes to a vehicle or engine covered by certification.
86.079–36 Submission of vehicle identification numbers.
86.079–39 Submission of maintenance instructions.
86.080–12 Alternative certification procedures.
86.082–2 Definitions.
86.082–34 Alternative procedure for notification of additions and changes.
86.084–2 Definitions.
86.084–4 Section numbering; construction.
86.084–40 Automatic expiration of reporting and recordkeeping requirements.
86.085–1 General applicability.
86.085–2 Definitions.
86.085–13 Alternative Durability Program.
86.085–20 Incomplete vehicles, classification.
86.085–37 Production vehicles and engines.
86.087–2 Definitions.

86.087–38 Maintenance instructions.
86.088–2 Definitions.
86.088–10 Emission standards for 1988 and 1989 model year gasoline-fueled heavy-duty engines and vehicles.
86.090–1 General applicability.
86.090–2 Definitions.
86.090–3 Abbreviations.
86.090–5 General standards; increase in emissions; unsafe conditions.
86.090–8 Emission standards for 1990 and later model year light-duty vehicles.
86.090–9 Emission standards for 1990 and later model year light-duty trucks.
86.090–14 Small-volume manufacturers certification procedures.
86.090–21 Application for certification.
86.090–22 Approval of application for certification; test fleet selections; determinations of parameters subject to adjustment for certification and Selective Enforcement Audit, adequacy of limits, and physically adjustable ranges.
86.090–24 Test vehicles and engines.
86.090–25 Maintenance.
86.090–26 Mileage and service accumulation; emission requirements.
86.090–27 Special test procedures.
86.091–2 Definitions.
86.091–7 Maintenance of records; submittal of information; right of entry.
86.091–9 Emission standards for 1991 and later model year light-duty trucks.
86.091–10 Emission standards for 1991 and later model year Otto-cycle heavy-duty engines and vehicles.
86.091–11 Emission standards for 1991 and later model year diesel heavy-duty engines.
86.091–15 NO_x and particulate averaging, trading, and banking for heavy-duty engines.
86.091–21 Application for certification.
86.091–23 Required data.
86.091–28 Compliance with emission standards.
86.091–29 Testing by the Administrator.
86.091–30 Certification.
86.091–35 Labeling.
86.092–1 General applicability.
86.092–2 Definitions.
86.092–14 Small-volume manufacturers certification procedures.
86.092–15 NO_x and particulate averaging, trading, and banking for heavy-duty engines.
86.092–23 Required data.
86.092–24 Test vehicles and engines.
86.092–26 Mileage and service accumulation; emission measurements.
86.092–35 Labeling.
86.093–2 Definitions.
86.093–11 Emission standards for 1993 and later model year diesel heavy-duty engines.
86.093–35 Labeling.
86.094–1 General applicability.
86.094–2 Definitions.
86.094–3 Abbreviations.
86.094–7 Maintenance of records; submittal of information; right of entry.
86.094–8 Emission standards for 1994 and later model year light-duty vehicles.
86.094–9 Emission standards for 1994 and later model year light-duty trucks.
86.094–11 Emission standards for 1994 and later model year diesel heavy-duty engines and vehicles.
86.094–13 Light-duty exhaust durability programs.
86.094–14 Small-volume manufacturers certification procedures.
86.094–15 NO_x and particulate averaging, trading, and banking for heavy-duty engines.
86.094–16 Prohibition of defeat devices.
86.094–17 Emission control diagnostic system for 1994 and later light-duty vehicles and light-duty trucks.
86.094–21 Application for certification.
86.094–22 Approval of application for certification; test fleet selections; determinations of parameters subject to adjustment for certification and Selective Enforcement Audit, adequacy of limits, and physically adjustable ranges.
86.094–23 Required data.
86.094–24 Test vehicles and engines.
86.094–25 Maintenance.
86.094–26 Mileage and service accumulation; emission requirements.
86.094–28 Compliance with emission standards.
86.094–30 Certification.
86.094–35 Labeling.
86.094–38 Maintenance instructions.
86.095–14 Small-volume manufacturers certification procedures.
86.095–23 Required data.
86.095–24 Test vehicles and engines.
86.095–26 Mileage and service accumulation; emission measurements.
86.095–30 Certification.
86.095–35 Labeling.
86.096–2 Definitions.
86.096–3 Abbreviations.
86.096–7 Maintenance of records; submittal of information; right of entry.
86.096–8 Emission standards for 1996 and later model year light-duty vehicles.
86.096–9 Emission standards for 1996 and later model year light-duty trucks.
86.096–10 Emission standards for 1996 and later model year Otto-cycle heavy-duty engines and vehicles.
86.096–11 Emission standards for 1996 and later model year diesel heavy-duty engines and vehicles.
86.096–14 Small-volume manufacturer certification procedures.
86.096–21 Application for certification.
86.096–23 Required data.
86.096–24 Test vehicles and engines.

86.096–26 Mileage and service accumulation; emission measurements.
86.096–30 Certification.
86.096–35 Labeling.
86.096–38 Maintenance instructions.
86.097–9 Emission standards for 1997 and later model year light-duty trucks.
86.098–2 Definitions.
86.098–3 Abbreviations.
86.098–7 Maintenance of records; submittal of information; right of entry.
86.098–8 Emission standards for 1998 and later model year light-duty vehicles.
86.098–10 Emission standards for 1998 and later model year Otto-cycle heavy-duty engines and vehicles.
86.098–11 Emission standards for 1998 and later model year diesel heavy-duty engines and vehicles.
86.098–14 Small-volume manufacturers certification procedures.
86.098–15 NO_x and particulate averaging, trading, and banking for heavy-duty engines.
86.098–17 Emission control diagnostic system for 1998 and later light-duty vehicles and light-duty trucks.
86.098–21 Application for certification.
86.098–22 Approval of application for certification; test fleet selections; determinations of parameters subject to adjustment for certification and Selective Enforcement Audit, adequacy of limits, and physically adjustable ranges.
86.098–23 Required data.
86.098–24 Test vehicles and engines.
86.098–25 Maintenance.
86.098–26 Mileage and service accumulation; emission measurements.
86.098–28 Compliance with emission standards.
86.098–30 Certification.
86.098–35 Labeling.
86.099–1 General applicability.
86.099–8 Emission standards for 1999 and later model year light-duty vehicles.
86.099–9 Emission standards for 1999 and later model year light-duty trucks.
86.099–10 Emission standards for 1999 and later model year Otto-cycle heavy-duty engines and vehicles.
86.099–11 Emission standards for 1999 and later model year diesel heavy-duty engines and vehicles.
86.099–17 Emission control diagnostic system for 1999 and later light-duty vehicles and light-duty trucks.
86.099–30 Certification.

Subpart B—Emission Regulations for 1977 and Later Model Year New Light-Duty Vehicles and New Light-Duty Trucks and New Otto-Cycle Complete Heavy-Duty Vehicles; Test Procedures

86.101 General applicability.
86.102 Definitions.
86.103 Abbreviations.
86.104 Section numbering; construction.
86.105 Introduction; structure of subpart.
86.106–00 Equipment required; overview.
86.106–90 Equipment required; overview.
86.106–94 Equipment required; overview.
86.106–96 Equipment required; overview.
86.107–90 Sampling and analytical system; evaporative emissions.
86.107–96 Sampling and analytical systems; evaporative emissions.
86.107–98 Sampling and analytical system.
86.108–00 Dynamometer.
86.108–79 Dynamometer.
86.109–90 Exhaust gas sampling system; Otto-cycle vehicles.
86.109–94 Exhaust gas sampling system; Otto-cycle vehicles not requiring particulate emission measurements.
86.110–90 Exhaust gas sampling system; diesel vehicles.
86.110–94 Exhaust gas sampling system; diesel-cycle vehicles, and Otto-cycle vehicles requiring particulate emissions measurements.
86.111–90 Exhaust gas analytical system.
86.111–94 Exhaust gas analytical system.
86.112–91 Weighing chamber (or room) and microgram balance specifications.
86.113–04 Fuel specifications.
86.113–07 Fuel specifications.
86.113–91 Fuel specifications.
86.113–94 Fuel specifications.
86.114–79 Analytical gases.
86.114–94 Analytical gases.
86.115–00 EPA urban dynamometer driving schedules.
86.115–78 EPA urban dynamometer driving schedule.
86.116–90 Calibrations, frequency and overview.
86.116–94 Calibrations, frequency and overview.
86.117–90 Evaporative emission enclosure calibrations.
86.117–96 Evaporative emission enclosure calibrations.
86.118–00 Dynamometer calibrations.
86.118–78 Dynamometer calibration.
86.119–90 CVS calibration.
86.120–82 Gas meter or flow instrumentation calibration; particulate measurement.
86.120–94 Gas meter or flow instrumentation calibration; particulate, methanol and formaldehyde measurement.
86.121–82 Hydrocarbon analyzer calibration.
86.121–90 Hydrocarbon analyzer calibration.
86.122–78 Carbon monoxide analyzer calibration.
86.123–78 Oxides of nitrogen analyzer calibration.
86.124–78 Carbon dioxide analyzer calibration.
86.125–94 Methane analyzer calibration.
86.126–90 Calibration of other equipment.
86.127–00 Test procedures; overview.
86.127–90 Test procedures; overview.

86.127–94 Test procedures; overview.
86.127–96 Test procedures; overview.
86.128–00 Transmissions.
86.128–79 Transmissions.
86.129–00 Road load power, test weight, and inertia weight class determination.
86.129–80 Road load power, test weight, and inertia weight class determination.
86.129–94 Road load power, test weight, inertia weight class determination, and fuel temperature profile.
86.130–00 Test sequence; general requirements.
86.130–78 Test sequence; general requirements.
86.130–96 Test sequence; general requirements.
86.131–00 Vehicle preparation.
86.131–90 Vehicle preparation.
86.131–96 Vehicle preparation.
86.132–00 Vehicle preconditioning.
86.132–90 Vehicle preconditioning.
86.132–96 Vehicle preconditioning.
86.133–90 Diurnal breathing loss test.
86.133–96 Diurnal emission test.
86.134–96 Running loss test.
86.135–00 Dynamometer procedure.
86.135–90 Dynamometer procedure.
86.135–94 Dynamometer procedure.
86.136–90 Engine starting and restarting.
86.137–90 Dynamometer test run, gaseous and particulate emissions.
86.137–94 Dynamometer test run, gaseous and particulate emissions.
86.137–96 Dynamometer test run, gaseous and particulate emissions.
86.138–90 Hot-soak test.
86.138–96 Hot soak test.
86.139–90 Particulate filter handling and weighing.
86.140–82 Exhaust sample analysis.
86.140–90 Exhaust sample analysis.
86.140–94 Exhaust sample analysis.
86.142–90 Records required.
86.143–90 Calculations; evaporative emissions.
86.143–96 Calculations; evaporative emissions.
86.144–90 Calculations; exhaust emissions.
86.144–94 Calculations; exhaust emissions.
86.145–82 Calculations; particulate emissions.
86.146–96 Fuel dispensing spitback procedure.
86.150–98 Refueling test procedure; overview.
86.151–98 General requirements; refueling test.
86.152–98 Vehicle preparation; refueling test.
86.153–98 Vehicle and canister preconditioning; refueling test.
86.154–98 Measurement procedure; refueling test.
86.155–98 Records required; refueling test.
86.156–98 Calculations; refueling test.
86.157–98 Refueling test procedures for liquefied petroleum gas-fueled vehicles.
86.158–00 Supplemental Federal Test Procedures; overview.
86.159–00 Exhaust emission test procedures for US06 emissions.
86.160–00 Exhaust emission test procedure for SC03 emissions.
86.161–00 Air conditioning environmental test facility ambient requirements.
86.162–00 Approval of alternative air conditioning test simulations and descriptions of AC1 and AC2.
86.162–03 Approval of alternative air conditioning test simulations.
86.163–00 Spot check correlation procedures for vehicles tested using a simulation of the environmental test cell for air conditioning emission testing.
86.164–00 Supplemental Federal Test Procedure calculations.

Subpart C—Emission Regulations for 1994 and Later Model Year Gasoline-Fueled New Light-Duty Vehicles, New Light-Duty Trucks and New Medium-Duty Passenger Vehicles; Cold Temperature Test Procedures

86.201–94 General applicability.
86.202–94 Definitions.
86.203–94 Abbreviations.
86.204–94 Section numbering; construction.
86.205–94 Introduction; structure of this subpart.
86.206–94 Equipment required; overview.
86.207–94 [Reserved]
86.208–94 Dynamometer.
86.209–94 Exhaust gas sampling system; gasoline-fueled vehicles.
86.210–94 [Reserved]
86.211–94 Exhaust gas analytical system.
86.212–94 [Reserved]
86.213–04 Fuel specifications.
86.213–94 Fuel specifications.
86.214–94 Analytical gases.
86.215–94 EPA urban dynamometer driving schedule.
86.216–94 Calibrations, frequency and overview.
86.217–94 [Reserved]
86.218–94 Dynamometer calibration.
86.219–94 CVS calibration.
86.220–94 [Reserved]
86.221–94 Hydrocarbon analyzer calibration.
86.222–94 Carbon monoxide analyzer calibration.
86.223–94 Oxides of nitrogen analyzer calibration.
86.224–94 Carbon dioxide analyzer calibration.
86.225–94 [Reserved]
86.226–94 Calibration of other equipment.
86.227–94 Test procedures; overview.
86.228–94 Transmissions.
86.229–94 Road load force, test weight, and inertia weight class determination.
86.230–94 Test sequence; general requirements.

86.231–94 Vehicle preparation.
86.232–94 Vehicle preconditioning.
86.233–94—86.234–94 [Reserved]
86.235–94 Dynamometer procedure.
86.236–94 Engine starting and restarting.
86.237–94 Dynamometer test run, gaseous emissions.
86.238–94—86.239–94 [Reserved]
86.240–94 Exhaust sample analysis.
86.241–94 [Reserved]
86.242–94 Records required.
86.243–94 [Reserved]
86.244–94 Calculations; exhaust emissions.
86.245–94 [Reserved]
86.246–94 Intermediate temperature testing.

Subpart D—Emission Regulations for New Gasoline-Fueled and Diesel-Fueled Heavy-Duty Engines; Gaseous Exhaust Test Procedures

86.301–79 Scope; applicability.
86.302–79 Definitions.
86.303–79 Abbreviations.
86.304–79 Section numbering; construction.
86.305–79 Introduction; structure of subpart.
86.306–79 Equipment required and specifications; overview.
86.307–82 Fuel specifications.
86.308–79 Gas specifications.
86.309–79 Sampling and analytical system; schematic drawing.
86.310–79 Sampling and analytical system; component specifications.
86.311–79 Miscellaneous equipment; specifications.
86.312–79 Dynamometer and engine equipment specifications.
86.313–79 Air flow measurement specifications; diesel engines.
86.314–79 Fuel flow measurement specifications.
86.315–79 General analyzer specifications.
86.316–79 Carbon monoxide and carbon dioxide analyzer specifications.
86.317–79 Hydrocarbon analyzer specifications.
86.318–79 Oxides of nitrogen analyzer specifications.
86.319–79 Analyzer checks and calibrations; frequency and overview.
86.320–79 Analyzer bench check.
86.321–79 NDIR water rejection ratio check.
86.322–79 NDIR CO_2 rejection ratio check.
86.327–79 Quench check; NO_X analyzer.
86.328–79 Leak checks.
86.329–79 System response time; check procedure.
86.330–79 NDIR analyzer calibration.
86.331–79 Hydrocarbon analyzer calibration.
86.332–79 Oxides of nitrogen analyzer calibration.
86.333–79 Dynamometer calibration.
86.334–79 Test procedure overview.
86.335–79 Gasoline-fueled engine test cycle.
86.336–79 Diesel engine test cycle.
86.337–79 Information.
86.338–79 Exhaust measurement accuracy.
86.339–79 Pre-test procedures.
86.340–79 Gasoline-fueled engine dynamometer test run.
86.341–79 Diesel engine dynamometer test run.
86.342–79 Post-test procedures.
86.343–79 Chart reading.
86.344–79 Humidity calculations.
86.345–79 Emission calculations.
86.346–79 Alternative NO_X measurement technique.
86.347–79 Alternative calculations for diesel engines.
86.348–79 Alternative to fuel H/C analysis.

Subpart E—Emission Regulations for 1978 and Later New Motorcycles, General Provisions

86.401–90 General applicability.
86.401–97 General applicability.
86.401–2006 General applicability.
86.402–78 Definitions.
86.402–98 Definitions.
86.403–78 Abbreviations.
86.404–78 Section numbering.
86.405–78 Measurement system.
86.406–78 Introduction, structure of subpart, further information.
86.407–78 Certificate of conformity required.
86.408–78 General standards; increase in emissions; unsafe conditions.
86.409–78 Defeat devices, prohibition.
86.410–80 Emission standards for 1980 and later model year motorcycles.
86.410–90 Emission standards for 1990 and later model year motorcycles.
86.410–2006 Emission standards for 2006 and later model year motorcycles.
86.411–78 Maintenance instructions, vehicle purchaser.
86.412–78 Maintenance instructions, submission to Administrator.
86.413–78 Labeling.
86.413–2006 Labeling.
86.414–78 Submission of vehicle identification number.
86.415–78 Production vehicles.
86.416–80 Application for certification.
86.417–78 Approval of application for certification.
86.418–78 Test fleet selection.
86.419–78 Engine displacement, motorcycle classes.
86.419–2006 Engine displacement, motorcycle classes.
86.420–78 Engine families.
86.421–78 Test fleet.
86.422–78 Administrator's fleet.
86.423–78 Test vehicles.
86.425–78 Test procedures.
86.426–78 Service accumulation.
86.427–78 Emission tests.
86.428–80 Maintenance, scheduled; test vehicles.

86.429–78 Maintenance, unscheduled; test vehicles.
86.430–78 Vehicle failure.
86.431–78 Data submission.
86.432–78 Deterioration factor.
86.434–78 Testing by the Administrator.
86.435–78 Extrapolated emission values.
86.436–78 Additional service accumulation.
86.437–78 Certification.
86.438–78 Amendments to the application.
86.439–78 Alternative procedure for notification of additions and changes.
86.440–78 Maintenance of records.
86.441–78 Right of entry.
86.442–78 Denial, revocation, or suspension of certification.
86.443–78 Request for hearing.
86.444–78 Hearings on certification.
86.445–2006 What temporary provisions address hardship due to unusual circumstances?
86.446–2006 What are the provisions for extending compliance deadlines for small-volume manufacturers under hardship?
86.447–2006 What provisions apply to motorcycle engines below 50 cc that are certified under the Small SI program or the Recreational-vehicle program?
86.448–2006 What provisions apply to vehicles certified under the Recreational-vehicle program?
86.449 Averaging provisions.

Subpart F—Emission Regulations for 1978 and Later New Motorcycles, Test Procedures

86.501–78 Applicability.
86.502–78 Definitions.
86.503–78 Abbreviations.
86.504–78 Section numbering.
86.505–78 Introduction; structure of subpart.
86.505–2004 Introduction; structure of subpart.
86.508–78 Dynamometer.
86.509–90 Exhaust gas sampling system.
86.511–90 Exhaust gas analytical system.
86.513–87 Fuel and engine lubricant specifications.
86.513–90 Fuel and engine lubricant specifications.
86.513–94 Fuel and engine lubricant specifications.
86.513–2004 Fuel and engine lubricant specifications.
86.514–78 Analytical gases.
86.515–78 EPA urban dynamometer driving schedule.
86.516–90 Calibrations, frequency and overview.
86.518–78 Dynamometer calibration.
86.519–78 Constant volume sampler calibration.
86.519–90 Constant volume sampler calibration.
86.521–90 Hydrocarbon analyzer calibration.
86.522–78 Carbon monoxide analyzer calibration.
86.523–78 Oxides of nitrogen analyzer calibration.
86.524–78 Carbon dioxide analyzer calibration.
86.526–90 Calibration of other equipment.
86.527–90 Test procedures, overview.
86.528–78 Transmissions.
86.529–78 Road load force and inertia weight determination.
86.529–98 Road load force and inertia weight determination.
86.530–78 Test sequence, general requirements.
86.531–78 Vehicle preparation.
86.532–78 Vehicle preconditioning.
86.535–90 Dynamometer procedure.
86.536–78 Engine starting and restarting.
86.537–90 Dynamometer test runs.
86.540–90 Exhaust sample analysis.
86.542–90 Records required.
86.544–90 Calculations; exhaust emissions.

AUTHORITY: 42 U.S.C. 7401–7671q.

EDITORIAL NOTE: Nomenclature changes to part 86 appear at 60 FR 34377, June 30, 1995 and 69 FR 18803, Apr. 9, 2004.

§ 86.1 Reference materials.

(a) The documents in paragraph (b) of this section have been incorporated by reference. The incorporation by reference was approved by the Director of the Federal Register in accordance with 5 U.S.C. 552(a) and 1 CFR part 51. Copies may be inspected at U.S. EPA, OAR, 401 M St., SW., Washington, DC 20460, or at the National Archives and Records Administration (NARA). For information on the availability of this material at NARA, call 202–741–6030, or go to: *http://www.archives.gov/federal_register/code_of_federal_regulations/ibr_locations.html.*

(b) The following paragraphs and tables set forth the material that has been incorporated by reference in this part.

(1) *ASTM material.* The following table sets forth material from the American Society for Testing and Materials that has been incorporated by reference. The first column lists the number and name of the material. The second column lists the section(s) of this part, other than this section, in which the matter is referenced. Copies of these materials may be obtained from American Society for Testing and

Materials, 100 Barr Harbor Drive, West Conshohocken, PA 19428–2959.

Document number and name	40 CFR part 86 reference
ASTM E29–67 (Reapproved 1980), Standard Recommended Practice for Indicating Which Places of Figures Are To Be Considered Significant in Specified Limiting Values.	86.1105–87.
ASTM E29–90, Standard Practice for Using Significant Digits in Test Data to Determine Conformance with Specifications.	86.609–84; 86.609–96; 86.609–97; 86.609–98; 86.1009–84; 86.1009–96; 86.1442; 86.1708–99; 86.1709–99; 86.1710–99; 86.1728–99.
ASTM D5186–91, Standard Test Method for Determination of Aromatic Content of Diesel Fuels by Supercritical Fluid Chromatography.	86.113–07; 86.1313–91; 86.1313–94; 86.1313–98; 1313–2007.
ASTM D2163–91, Standard Test Method for Analysis of Liquefied Petroleum (LP) Gases and Propane Concentrates by Gas Chromatography.	86.113–94; 86.1213–94; 86.1313–94.
ASTM D1945–91, Standard Test Method for Analysis of Natural Gas By Gas Chromatography.	86.113–94; 86.513–94; 86.1213–94; 86.1313–94.
ASTM E29–93a, Standard Practice for Using Significant Digits in Test Data to Determine Conformance with Specifications.	86.098–15; 86.004–15; 86.007–11; 86.007–15; 86.1803–01; 86.1823–01; 86.1824–01; 86.1825–01; 86.1837–01.
ASTM D2986–95a, (Reapproved 1999) Standard Practice for Evaluation of Air Assay Media by the Monodisperse DOP (Dioctyl Phthalate) Smoke Test.	86.1310–2007.
ASTM F1471–93, Standard Test Method for Air Cleaning Performance of a High-Efficiency Particulate Air-Filter System.	86.1310–2007.
ASTM D 975–04c Standard Specification for Diesel Fuel Oils	86.1910

(2) *SAE material*. The following table sets forth material from the Society of Automotive Engineers that has been incorporated by reference. The first column lists the number and name of the material. The second column lists the section(s) of this part, other than §86.1, in which the matter is referenced. The second column is presented for information only and may not be all inclusive. Copies of these materials may be obtained from Society of Automotive Engineers International, 400 Commonwealth Dr., Warrendale, PA, 15096–0001.

Document No. and name	40 CFR part 86 reference
SAE J1349, June 1990, Engine Power Test Code—Spark Ignition and Compression Ignition.	86.094–8; 86.096–8
SAE J1850 July 1995, Class B Data Communication Network Interface.	86.099–17; 86.1806–01
SAE J1877, July 1994 Recommended Practice for Bar-Coded Vehicle Identification Number Label.	86.095–35; 86.1806–01
SAE J1892 October 1993, Recommended Practice for Bar-Coded Vehicle Emission Configuration Label.	86.095–35; 86.1806–01
SAE J1939–11, December 1994, Physical Layer-250K bits/s, Shielded Twisted Pair.	86.005–17; 86.1806–05
SAE J1939–13, July 1999, Off-Board Diagnostic Connector.	86.005–17; 86.1806–05
SAE J1939–21, July 1994, Data Link Layer.	86.005–17; 86.1806–05
SAE J1939–31, December 1997, Network Layer.	86.005–17; 86.1806–05
SAE J1939–71, May 1996, Vehicle Application Layer.	86.005–17; 86.1806–05
SAE J1939–73, February 1996, Application Layer-Diagnostics.	86.005–17; 86.1806–05
SAE J1939–81, July 1997, Recommended Practice for Serial Control and Communications Vehicle Network—Part 81—Network Management.	86.005–17; 86.1806–05
SAE J1962 January 1995, Diagnostic Connector.	86.099–17; 86.1806–01
SAE J1979 July 1996, E/E Diagnostic Test Modes.	86.099–17; 86.1806–01
SAE J2012 July 1996, Recommended Practice for Diagnostic Trouble Code Definitions.	86.099–17; 86.1806–01
SAE Recommended Practice J1151, December 1991, Methane Measurement Using Gas Chromatography, 1994 SAE Handbook—SAE International Cooperative Engineering Program, Volume 1: Materials, Fuels, Emissions, and Noise; Section 13 and page 170 (13.170).	86.111–94; 86.1311–94.
SAE Recommended Practice J1937, November 1989, Engine Testing with Low Temperature Charge Air Cooler Systems in a Dynamometer Test Cell.	86.1330–84; 86.1330–90.
SAE J1850, Class B Data Communication Network Interface. (Revised, May 2001).	86.005–17; 86.1806–04; 86.1806–05

Document No. and name	40 CFR part 86 reference
SAE J1930, Electrical/Electronic Systems Diagnostic Terms, Definitions, Abbreviations, and Acronyms—Equivalent to ISO/TR 15031–2: April 30, 2002. (Revised, April 2002).	86.005–17; 86.1806–04; 86.1806–05
SAE J1939–11, Physical Layer—250K bits/s, Shielded Twisted Pair. (Revised, October 1999).	86.005–17; 86.1806–04; 86.1806–05
SAE J1939–13, Off-Board Diagnostic Connector. (July 1999).	86.005–17; 86.1806–04; 86.1806–05
SAE J1939–21, Data Link Layer. (Revised, April 2001).	86.005–17; 86.1806–04; 86.1806–05
SAE J1939–31, Network Layer. (Revised, December 1997).	86.005–17; 86.1806–04; 86.1806–05
SAE J1939–71, Vehicle Application Layer—J1939–71 (through 1999). (Revised, August 2002).	86.005–17; 86.1806–04; 86.1806–05
SAE J1939–73, Application Layer-Diagnostics. (Revised, June 2001).	86.005–17; 86.1806–04; 86.1806–05
SAE J1939–81, Recommended Practice for Serial Control and Communications Vehicle Network Part 81—Network Management. (July 1997).	86.005–17; 86.1806–04;— 86.1806–05
SAE J1962, Diagnostic Connector—Equivalent to ISO/DIS 15031–3:December 14, 2001. (Revised, April 2002).	86.005–17;86.1806–04; 86.1806–05
SAE J1978, OBD II Scan Tool—Equivalent to ISO/DIS 15031–4; December 14, 2001. (Revised, April 2002).	86.005–17;86.1806–04; 86.1806–05
SAE J1979, E/E Diagnostic Test Modes—Equivalent to ISO/DIS 15031–5: April 30, 2002. (Revised, April 2002).	86.099–17;86.005–17; 86.1806–01; 86.1806–04; 86.1806–05
SAE J2012, Diagnostic Trouble Code Definitions—Equivalent to ISO/DIS 15031–6: April 30, 2002. (Revised, April 2002,).	86.005–17; 86.1806–04; 86.1806–05
SAE Recommended Practice J1930 (Revised, May, 1998), Electrical/ Electronic Systems Diagnostic Terms, Definitions, Abbreviations, and Acronyms.	86.096–38; 86.004–38; 86.007–38; 86.1808–01; 86.1808–07.
SAE Recommended Practice J1979 (Revised, September, 1997), E/E Diagnostic Test Modes.	86.096–38; 86.004–38; 86.007–38; 86.1808–01; 86.1808–07.
SAE Recommended Practice J2284–3 (May, 2001), High Speed CAN (HSC) for Vehicle Applications at 500 KBPS.	86.096–38; 86.004–38; 86.007–38; 86.1808–01; 86.1808–07.
SAE Recommended Practice J2534 (February, 2002), Recommended Practice for Pass-Thru Vehicle Programming.	86.096–38; 86.004–38; 86.007–38; 86.1808–01; 86.1808–07.

(3) *ANSI material*. The following table sets forth material from the American National Standards Institute that has been incorporated by reference. The first column lists the number and name of the material. The second column lists the section(s) of this part, other than § 86.1, in which the matter is referenced. The second column is presented for information only and may not be all inclusive. Copies of these materials may be obtained from the American National Standards Institute, 11 West 42nd Street, 13th Floor, New York, NY 10036.

Document number and name	40 CFR part 86 reference
ANSI/AGA NGV1–1994, Standard for Compressed Natural Gas Vehicle (NGV) Fueling Connection Devices.	86.001–9; 86.004–9; 86.098–8; 86.099–8; 86.099–9; 86.1810–01

(4) *California regulatory requirements*. The following table sets forth California regulatory requirements that have been incorporated by reference. The first column lists the name and date of the material. The second column lists the sections of the part, other than § 86.1, in which the matter is referenced. The second column is presented for information only and may not be all-inclusive. Copies of these materials may be obtained from U.S. EPA, Office of Air and Radiation, 1200 Pennsylvania Ave., NW., Washington, DC 20460.

Document No. and name	40 CFR part 86 reference
California Regulatory Requirements Applicable to the ''LEV II'' Program, including:.	
1. California Exhaust Emission Standards and Test Procedures for 2003 and Subsequent Model Zero-Emission Vehicles and 2001 and Subsequent Model Hybrid Electric Vehicles, in the Passenger Car, Light-duty Truck and Medium-duty Vehicle Classes. August 5, 1999.	86.1806–01; 86.1811–04; 86.1844–01.
2. California Non-Methane Organic Gas Test Procedures. August 5, 1999.	86.1803–01; 86.1810–01; 86.1811–04.

Document No. and name	40 CFR part 86 reference
California Regulatory Requirements Applicable to the National Low Emission Vehicle Program, October 1996.	86.113–004; 86.612–97; 86.1012–97; 86.1702–99; 86.1708–99; 86.1709–99; 86.1717–99; 86.1735–99; 86.1771–99; 86.1775–99; 86.1776–99; 86.1777–99; Appendix XVI; Appendix XVII.

(5) *ISO material*. The following table sets forth material from the International Organization of Standardization that has been incorporated by reference. The first column lists the number and name of the material. The second column lists the section(s) of this part, other than § 86.1, in which the matter is referenced. The second column is presented for information only and may not be all inclusive. Copies of these materials may be obtained from the International Organization for Standardization, Case Postale 56, CH–1211 Geneva 20, Switzerland.

Document No. and name	40 CFR part 86 reference
ISO 9141–2, February 1, 1994, Road vehicles—Diagnostic systems—Part 2: CARB requirements for interchange of digital information.	86.099–17; 86.1806–01; 86.1806–04; 86.005–17; 86.1806–05
ISO 14230–4:2000(E) ''Road vehicles—Diagnostic systems—KWP 2000 requirements for Emission-related systems'', (June 1, 2000).	86.099–17; 86.1806–01; 86.1806–04; 86.005–17; 86.1806–05
ISO 15765–4.3:2001, December 14, 2001, Road Vehicles—Diagnostics on Controller Area Network (CAN)—Part 4: Requirements for emission-related systems.	86.005–17; 86.1806–04; 86.1806–05

(6) *NIST material*. The following table lists material from the National Institute of Standards and Technology that we have incorporated by reference. The first column lists the number and name of the material. The second column lists the sections of this part where we reference it. Anyone may purchase copies of these materials from the Government Printing Office, Washington, DC 20402 or download them from the Internet at *http://www.nist.gov/*.

Document No. and name	Part 86 reference
NIST Special Publication 811, Guide for the Use of the International System of Units (SI), 1995 Edition.	86.1901

[58 FR 16019, Mar. 24, 1993, as amended at 58 FR 58417, Nov. 1, 1993; 59 FR 48491, 59 FR 48491, Sept. 21, 1994; 59 FR 50073, Sept. 30, 1994; 60 FR 43887, Aug. 23, 1995; 61 FR 54877, Oct. 22, 1996; 62 FR 31232, June 6, 1997; 62 FR 47119, Sept. 5, 1997; 62 FR 54715, Oct. 21, 1997; 63 FR 965, Jan. 7, 1998; 63 FR 70694, Dec. 22, 1998; 64 FR 23920, May 4, 1999; 65 FR 6848, Feb. 10, 2000; 65 FR 59944, Oct. 6, 2000; 66 FR 5159, Jan. 18, 2001; 68 FR 35798, June 17, 2003; 68 FR 35798, June 17, 2003; 70 FR 34619, June 14, 2005]

Subpart A—General Provisions for Emission Regulations for 1977 and Later Model Year New Light-Duty Vehicles, Light-Duty Trucks and Heavy-Duty Engines, and for 1985 and Later Model Year New Gasoline Fueled, Natural Gas-Fueled, Liquefied Petroleum Gas-Fueled and Methanol-Fueled Heavy-Duty Vehicles

SOURCE: 42 FR 32907, June 28, 1977, unless otherwise noted.

§ 86.000–2 Definitions.

The definitions of § 86.098–2 continue to apply to 1998 and later model year vehicles. The definitions listed in this section apply beginning with the 2000 model year.

AC1 means a test procedure as described in § 86.162–00 which simulates testing with air conditioning operating in an environmental test cell by adding the air conditioning compressor load to the normal dynamometer forces.

AC2 means a test procedure as described in § 86.162–00 which simulates testing with air conditioning operating in an environmental test cell by adding

a heat load to the passenger compartment.

Alternative fuels means any fuel other than gasoline and diesel fuels, such as methanol, ethanol, and gaseous fuels.

866 Cycle means the test cycle that consists of the last 866 seconds (seconds 505 to 1372) of the EPA Urban Dynamometer Driving Schedule, described in § 86.115–00 and listed in appendix I, paragraph (a), of this part.

Environmental test cell means a test cell capable of wind-speed, solar thermal load, ambient temperature, and humidity control or simulation which meets the requirements of § 86.161–00 for running emission tests with the air conditioning operating.

Federal Test Procedure, or FTP means the test procedure as described in § 86.130–00 (a) through (d) and (f) which is designed to measure urban driving tail pipe exhaust emissions and evaporative emissions over the Urban Dynamometer Driving Schedule as described in appendix I to this part.

505 Cycle means the test cycle that consists of the first 505 seconds (seconds 1 to 505) of the EPA Urban Dynamometer Driving Schedule, described in § 86.115–00 and listed in appendix I, paragraph (a), of this part.

SC03 means the test cycle, described in § 86.160–00 and listed in appendix I, paragraph (h), of this part, which is designed to represent driving immediately following startup.

Supplemental FTP, or SFTP means the additional test procedures designed to measure emissions during aggressive and microtransient driving, as described in § 86.159–00 over the US06 cycle, and also the test procedure designed to measure urban driving emissions while the vehicle's air conditioning system is operating, as described in § 86.160–00 over the SC03 cycle.

US06 means the test cycle, described in § 86.159–00 and listed in appendix I, paragraph (g), of this part, which is designed to evaluate emissions during aggressive and microtransient driving.

[61 FR 54878, Oct. 22, 1996]

§ 86.000–3 Abbreviations.

The abbreviations in § 86.098–3 continue to apply to 1998 and later model year vehicles. The abbreviations in this section apply beginning with the 2000 model year:

A/C—Air conditioning
FTP—Federal Test Procedure
SFTP—Supplemental Federal Test Procedure
WOT—Wide Open Throttle

[61 FR 54878, Oct. 22, 1996]

§ 86.000–7 Maintenance of records; submittal of information; right of entry.

Section 86.000–7 includes text that specifies requirements that differ from § 86.091–7, § 86.094–7 or § 86.096–7. Where a paragraph in § 86.091–7, § 86.094–7 or § 86.096–7 is identical and applicable to § 86.000–7, this may be indicated by specifying the corresponding paragraph and the statement ''[Reserved]. For guidance see § 86.091–7.'' or ''[Reserved]. For guidance see § 86.094–7.'' or ''[Reserved]. For guidance see § 86.096–7.''

(a) introductory text through (a)(2) [Reserved]. For guidance see § 86.091–7.

(a)(3) [Reserved]. For guidance see § 86.094–7.

(b)–(c)(2) [Reserved]. For guidance see § 86.091–7.

(c)(3) [Reserved]. For guidance see § 86.094–7.

(c)(4)–(d)(1)(v) [Reserved]. For guidance see § 86.091–7.

(d)(1)(vi)–(d)(2)(iv) [Reserved]. For guidance see § 86.094–7.

(d)(3)–(g) [Reserved]. For guidance see § 86.091–7.

(h)(1) The manufacturer (or contractor for the manufacturer, if applicable) of any model year 2000 through 2002 light-duty vehicle or light light-duty truck or model year 2002 through 2004 heavy light-duty truck that is certified shall establish, maintain, and retain the following adequately organized and indexed records for each such vehicle:

(i) EPA engine family;

(ii) Vehicle identification number;

(iii) Model year and production date;

(iv) Shipment date;

(v) Purchaser; and

(vi) Purchase contract.

(h)(2)–(h)(5) [Reserved]. For guidance see § 86.094–7.

(h)(6) Voiding a certificate. (i) EPA may void ab initio a certificate for a vehicle certified to Tier 1 certification

standards or to the respective evaporative and/or refueling test procedure and accompanying evaporative and/or refueling standards as set forth or otherwise referenced in §§ 86.000–8, 86.000–9, or 86.098–10 for which the manufacturer fails to retain the records required in this section or to provide such information to the Administrator upon request.

(h)(6)(ii)–(h)(7)(vi) [Reserved]. For guidance see § 86.096–7.

(h)(7)(vii) EPA evaporative/refueling family.

[61 FR 54878, Oct. 22, 1996]

§ 86.000–8 Emission standards for 2000 and later model year light-duty vehicles.

Section 86.000–8 includes text that specifies requirements that differ from § 86.096–8 or § 86.099–8. Where a paragraph in § 86.096–8 or § 86.099–8 is identical and applicable to § 86.000–8, this may be indicated by specifying the corresponding paragraph and the statement ''[Reserved]. For guidance see § 86.096–8.'' or ''[Reserved]. For guidance see § 86.099–8.''

(a)(1) introductory text through (a)(1)(ii)(B) [Reserved]. For guidance see § 86.096–8.

(a)(1)(iii)–(b)(4) [Reserved]. For guidance see § 86.099–8.

(b)(5) [Reserved]. For guidance see § 86.096–8.

(b)(6) [Reserved]. For guidance see § 86.099–8.

(c) [Reserved]. For guidance see § 86.096–8.

(d) [Reserved]. For guidance see § 86.099–8.

(e) SFTP Standards. (1) Exhaust emissions from 2000 and later model year light-duty vehicles shall meet the additional SFTP standards of table A00–2 (defined by useful life, fuel type, and test type) according to the implementation schedule in table A00–1. The standards set forth in table A00–2 refer to exhaust emissions emitted over the Supplemental Federal Test Procedure (SFTP) as set forth in subpart B of this part and collected and calculated in accordance with those procedures. Compliance with these standards are an additional requirement to the required compliance with Tier 1 standards as defined in §§ 86.096–8 (a)(1) introductory text through (a)(1)(ii)(B) and 86.099–8 (a)(1)(iii)–(a)(3):

TABLE A00–1—IMPLEMENTATION SCHEDULE FOR LIGHT-DUTY VEHICLES FOR ($NMHC=NO_X$) AND CO

Model year	Percentage
2000	40
2001	80
2002	100

TABLE A00–2—USEFUL LIFE STANDARDS (G/MI) FOR LIGHT-DUTY VEHICLES FOR ($NMHC=NO_X$) AND CO

Useful life	Fuel type	$NMHC=NO_X$ composite	CO		
			A/C test	US06 test	Composite option
Intermediate	Gasoline	0.65	3.0	9.0	3.4
	Diesel	1.48	NA	9.0	3.4
Full	Gasoline	0.91	3.7	11.1	4.2
	Diesel	2.07	NA	11.1	4.2

(i) A minimum of the percentage shown in table A00–1 of a manufacturer's sales of the applicable model year's light-duty vehicles shall not exceed the applicable SFTP standards in table A00–2 when tested under the procedures in subpart B of this part indicated for 2000 and later model year light-duty vehicles.

(ii) Optionally, a minimum of the percentage shown in table A00–1 of a manufacturer's combined sales of the applicable model year's light-duty vehicles and light light-duty trucks shall not exceed the applicable SFTP standards. Under this option, the light-duty vehicles shall not exceed the applicable SFTP standards in table A00–2, and the light light-duty trucks shall not exceed

the applicable SFTP standards in table A00–4 of § 86.000–9.

(iii) Sales percentages for the purposes of determining compliance with this paragraph (e)(1) shall be based on total actual U.S. sales of light-duty vehicles of the applicable model year by a manufacturer to a dealer, distributor, fleet operator, broker, or any other entity which comprises the point of first sale. If the option of paragraph (e)(1)(ii) of this section is taken, such sales percentages shall be based on the total actual combined U.S. sales of light-duty vehicles and light light-duty trucks of the applicable model year by a manufacturer to a dealer, distributor, fleet operator, broker, or any other entity which comprises the point of first sale.

(iv) The manufacturer may petition the Administrator to allow actual volume produced for U.S. sale to be used in lieu of actual U.S. sales for purposes of determining compliance with the implementation schedule sales percentages of table A00–1. Such petition shall be submitted within 30 days of the end of the model year to the Vehicle Programs and Compliance Division. For the petition to be granted, the manufacturer must establish to the satisfaction of the Administrator that actual production volume is functionally equivalent to actual sales volume.

(2) These SFTP standards do not apply to vehicles certified on alternative fuels, but the standards do apply to the gasoline and diesel fuel operation of flexible fuel vehicles and dual fuel vehicles.

(3) These SFTP standards do not apply to vehicles tested at high altitude.

(4) The air to fuel ratio shall not be richer at any time than the leanest air to fuel mixture required to obtain maximum torque (lean best torque), plus a tolerance of six (6) percent. The Administrator may approve a manufacturer's request for additional enrichment if it can be shown that additional enrichment is needed to protect the engine or emissions control hardware.

(5) The requirement to use a single roll dynamometer (or a dynamometer which produces equivalent results), discussed in §§ 86.108–00, 86.118–00, and 86.129–00, applies to all SFTP and FTP test elements as set forth in subpart B of this part for families which are designated as SFTP compliant under the implementation schedule in table A00–1.

(6) Small volume manufacturers, as defined in § 86.094–14(b)(1) and (2), are exempt from the requirements of this paragraph (e) until model year 2002, when 100 percent compliance with the standards of this paragraph (e) is required. This exemption does not apply to small volume engine families as defined in § 86.094–14(b)(5).

(7) The manufacturer must state at the time of Application for Certification, based on projected U.S. sales or projected production for U.S. sale, which families will be used to attain the required implementation schedule sales percentages for certification purposes.

(8) A manufacturer cannot use one set of engine families to meet its intermediate useful life standards and another to meet its full useful life standards. The same families which are used to meet the intermediate useful life standards will be required without deviation to meet the corresponding full useful life standards.

(9) Compliance with composite standards shall be demonstrated using the calculations set forth in § 86.164–00.

(f) [Reserved]

(g)–(k) [Reserved]. For guidance see § 86.096–8.

[61 FR 54878, Oct. 22, 1996]

§ 86.000–9 Emission standards for 2000 and later model year light-duty trucks.

Section 86.000–9 includes text that specifies requirements that differ from § 86.097–9 or § 86.099–9. Where a paragraph in § 86.097–9 or § 86.099–9 is identical and applicable to § 86.000–9, this may be indicated by specifying the corresponding paragraph and the statement ''[Reserved]. For guidance see § 86.097–9.'' or ''[Reserved]. For guidance see § 86.099–9.''

(a)(1) introductory text through (a)(1)(iii) [Reserved]. For guidance see § 86.097–9.

(a)(1)(iv)–(b)(4) [Reserved]. For guidance see § 86.099–9.

(b)(5) [Reserved]

(c) [Reserved]. For guidance see § 86.097–9.

(d) [Reserved]

(e) *SFTP Standards.* (1) Light light-duty trucks. (i) Exhaust emissions from 2000 and later model year light light-duty trucks shall meet the additional SFTP standards of table A00–4 (defined by useful life, fuel type, truck type, loaded vehicle weight (LVW), and test type) according to the implementation schedule in table A00–3. The standards set forth in table A00–4 refer to exhaust emissions emitted over the Supplemental Federal Test Procedure (SFTP) as set forth in subpart B of this part and collected and calculated in accordance with those procedures. Compliance with these standards are an additional requirement to the required compliance with Tier 1 standards as defined in §§ 86.097–9(a)(1) introductory text through (a)(1)(iii) and 86.099–9(a)(1)(iv)–(a)(3):

TABLE A00–3—IMPLEMENTATION SCHEDULE FOR LIGHT LIGHT-DUTY TRUCKS FOR ($NMHC+NO_X$) AND CO

Model year	Percentage
2000	40
2001	80
2002	100

TABLE A00–4—USEFUL LIFE STANDARDS (G/MI) FOR LIGHT LIGHT-DUTY TRUCKS FOR ($NMHC+NO_X$) AND CO

Useful life	Fuel type	Truck type	LVW (lbs)	$NMHC+NO_X$ Composite	CO		
					A/C test	US06 test	Composite option
Intermediate	Gasoline	LDT1	0–3750	0.65	3.0	9.0	3.4
		LDT2	3751–5750	1.02	3.9	11.6	4.4
	Diesel	LDT1	0–3750	1.48	NA	9.0	3.4
		LDT2	3751–5750	NA	NA	NA	NA
Full	Gasoline	LDT1	0–3750	0.91	3.7	11.1	4.2
		LDT2	3751–5750	1.37	4.9	14.6	5.5
	Diesel	LDT1	0–3750	2.07	NA	11.1	4.2
		LDT2	3751–5750	NA	NA	NA	NA

(A) A minimum of the percentage shown in table A00–3 of a manufacturer's sales of the applicable model year's light light-duty trucks shall not exceed the applicable SFTP standards in table A00–4 when tested under the procedures in subpart B of this part indicated for 2000 and later model year light light-duty trucks.

(B) Optionally, a minimum of the percentage shown in table A00–3 of a manufacturer's combined sales of the applicable model year's light-duty vehicles and light light-duty trucks shall not exceed the applicable SFTP standards. Under this option, the light-duty vehicles shall not exceed the applicable SFTP standards in table A00–2 of § 86.000–8, and the light light-duty trucks shall not exceed the applicable SFTP standards in table A00–4.

(C) Sales percentages for the purposes of determining compliance with paragraph (e)(1)(i)(A) of this section shall be based on total actual U.S. sales of light light-duty trucks of the applicable model year by a manufacturer to a dealer, distributor, fleet operator, broker, or any other entity which comprises the point of first sale. If the option of § 86.097–9(a)(1)(i)(B) is taken, such sales percentages shall be based on the total actual combined U.S. sales of light-duty vehicles and light light-duty trucks of the applicable model year by a manufacturer to a dealer, distributor, fleet operator, broker, or any other entity which comprises the point of first sale.

(D) The manufacturer may petition the Administrator to allow actual volume produced for U.S. sale to be used in lieu of actual U.S. sales for purposes of determining compliance with the implementation schedule sales percentages of table A000–3. Such petition shall be submitted within 30 days of the end of the model year to the Vehicle Programs and Compliance Division. For the petition to be granted, the manufacturer must establish to the satisfaction of the Administrator that actual production volume is functionally equivalent to actual sales volume.

(ii) These SFTP standards do not apply to light light-duty trucks certified on alternative fuels, but the standards do apply to the gasoline and diesel fuel operation of flexible fuel vehicles and dual fuel vehicles.

(iii) These SFTP standards do not apply to light light-duty trucks tested at high altitude.

(iv) The air to fuel ratio shall not be richer at any time than the leanest air to fuel mixture required to obtain maximum torque (lean best torque), plus a tolerance of six (6) percent. The Administrator may approve a manufacturer's request for additional enrichment if it can be shown that additional enrichment is needed to protect the engine or emissions control hardware.

(v) The requirement to use a single roll dynamometer (or a dynamometer which produces equivalent results), discussed in §§ 86.108–00, 86.118–00, and 86.129–00, applies to all SFTP and FTP test elements as set forth in subpart B of this part for engine families which are designated as SFTP compliant under the implementation schedule in table A00–3.

(vi) Small volume manufacturers, as defined in § 86.094–14(b) (1) and (2), are exempt from the requirements of this paragraph (e) until model year 2002, when 100 percent compliance with the standards of this paragraph (e) is required. This exemption does not apply to small volume engine families as defined in § 86.094–14(b)(5).

(vii) The manufacturer must state at the time of Application for Certification, based on projected U.S. sales or projected production for U.S. sale, which engine families will be used to attain the required implementation schedule sales percentages for certification purposes.

(viii) A manufacturer cannot use one set of engine families to meet its intermediate useful life standards and another to meet its full useful life standards. The same engine families which are used to meet the intermediate useful life standards will be required without deviation to meet the corresponding full useful life standards.

(ix) Compliance with composite standards shall be demonstrated using the calculations set forth in § 86.164–00.

(2) Heavy light-duty trucks. (i) Exhaust emissions from 2002 and later model year heavy light-duty trucks shall meet the SFTP standards of table A00–6 (defined by useful life, fuel type, truck type, adjusted loaded vehicle weight (ALVW), and test type) according to the implementation schedule in table A00–5. The standards set forth in table A00–6 refer to exhaust emissions emitted over the Supplemental Federal Test Procedure (SFTP) as set forth in subpart B of this part and collected and calculated in accordance with those procedures. Compliance with these standards are an additional requirement to the required compliance with Tier 1 standards as defined in §§ 86.097–9(a)(1) introductory text through (a)(1)(iii) and 86.099–9(a)(1)(iv)–(a)(3):

TABLE A00–5—IMPLEMENTATION SCHEDULE FOR HEAVY LIGHT-DUTY TRUCKS FOR ($NMHC+NO_X$) AND CO

Model year	Percentage
2002	40
2003	80
2004	100

TABLE A00–6—USEFUL LIFE STANDARDS (G/MI) FOR HEAVY LIGHT-DUTY TRUCKS FOR ($NMHC+NO_X$) AND CO

Useful life	Fuel type	Truck type	ALVW (lbs)	$NMHC+NO_X$ composite	CO		
					A/C test	US06 test	Composite option
Intermediate	Gasoline	LDT3	3751–5750	1.02	3.9	11.6	4.4
		LDT4	>5750	1.49	4.4	13.2	5.0
	Diesel	LDT3	3751–5750	NA	NA	NA	NA
		LDT4	>5750	NA	NA	NA	NA
Full	Gasoline	LDT3	3751–5750	1.44	5.6	16.9	6.4
		LDT4	>5750	2.09	6.4	19.3	7.3
	Diesel	LDT3	3751–5750	NA	NA	NA	NA
		LDT4	>5750	NA	NA	NA	NA

(A) A minimum of the percentage shown in table A00–5 of a manufacturer's sales of the applicable model year's heavy light-duty trucks shall not exceed the applicable SFTP standards in table A00–6 when tested under the procedures in subpart B of this part indicated for 2002 and later model year heavy light-duty trucks.

(B) Sales percentages for the purposes of determining compliance with paragraph (e)(1)(ii)(A) of this section shall be based on total actual U.S. sales of heavy light-duty trucks of the applicable model year by a manufacturer to a dealer, distributor, fleet operator, broker, or any other entity which comprises the point of first sale.

(C) The manufacturer may petition the Administrator to allow actual volume produced for U.S. sale to be used in lieu of actual U.S. sales for purposes of determining compliance with the implementation schedule sales percentages of table A00–5. Such petition shall be submitted within 30 days of the end of the model year to the Vehicle Programs and Compliance Division. For the petition to be granted, the manufacturer must establish to the satisfaction of the Administrator that actual production volume is functionally equivalent to actual sales volume.

(ii) These SFTP standards do not apply to heavy light-duty trucks certified on alternative fuels, but the standards do apply to the gasoline fuel operation of flexible fuel vehicles and dual fuel vehicles.

(iii) These SFTP standards do not apply to heavy light-duty trucks tested at high altitude.

(iv) The air to fuel ratio shall not be richer at any time than the leanest air to fuel mixture required to obtain maximum torque (lean best torque), plus a tolerance of six (6) percent. The Administrator may approve a manufacturer's request for additional enrichment if it can be shown that additional enrichment is needed to protect the engine of emissions control hardware.

(v) The requirement to use a single roll dynamometer (or a dynamometer which produces equivalent results), discussed in §§ 86.108–00, 86.118–00, and 86.129–00, applies to all SFTP and FTP test elements for families which are designated as SFTP compliant under the implementation schedule in table A00–5.

(vi) Small volume manufacturers, as defined in § 86.094–14(b) (1) and (2), are exempt from the requirements of paragraph (e) of this section until model year 2004, when 100 percent compliance with the standards of this paragraph (e) is required. This exemption does not apply to small volume engine families as defined in § 86.094–14(b)(5).

(vii) The manufacturer must state at the time of Application for Certification, based on projected U.S. sales or projected production for U.S. sale, which families will be used to attain the required implementation schedule sales percentages for certification purposes.

(viii) A manufacturer cannot use one set of engine families to meet its intermediate useful life standards and another to meet its full useful life standards. The same families which are used to meet the intermediate useful life standards will be required without deviation to meet the corresponding full useful life standard.

(ix) The NO_X averaging program is not applicable for determining compliance with the standards of table A00–6.

(x) Compliance with composite standards shall be demonstrated using the calculations set forth in § 86.164–00.

(f) [Reserved]

(g)–(k) [Reserved]. For guidance see § 86.097–9.

[61 FR 54879, Oct. 22, 1996]

§ 86.000–15 NO_X and particulate averaging, trading, and banking for heavy-duty engines.

Section 86.000–15 includes text that specifies requirements that differ from § 86.094–15 or § 86.098–15. Where a paragraph in § 86.094–15 or § 86.098–15 is identical and applicable to § 86.000–15, this may be indicated by specifying the corresponding paragraph and the statement ''[Reserved]. For guidance see § 86.094–15.'' or ''[Reserved]. For guidance see § 86.098–15.''.

(a)(1) Heavy-duty engines eligible for NO_X and particulate averaging, trading and banking programs are described in the applicable emission standards sections in this subpart. All heavy-duty

engine families which include any engines labeled for use in clean-fuel vehicles as specified in 40 CFR part 88 are not eligible for these programs. For manufacturers selecting Option 1 Otto-cycle engine standards contained in § 86.005–10(f)(1), the ABT program requirements in § 86.004–15 apply for 2003 model year Otto-cycle engines, rather than the provisions contained in this § 86.000–15. Participation in these programs is voluntary.

(a)(2)–(b) [Reserved]. For guidance see § 86.094–15.

(c) [Reserved]. For guidance see § 86.098–15.

(d)–(i) [Reserved]. For guidance see § 86.094–15.

(j) *Optional program for early banking for diesel engines.* Provisions set forth in §§ 86.094–15 (a), (b), (d)–(i), and 86.098–15 (c) apply except as specifically stated otherwise in § 86.098–15 (j)(1)–(j)(3)(iii).

(j)(1)–(j)(3)(iii) [Reserved]. For guidance see § 86.098–15.

(k) *Optional program for early banking for Otto-cycle engines.* Provisions set forth in §§ 86.094–15(a), (b), (d)–(i), and 86.098–15(c) apply except as specifically stated otherwise in this paragraph (k).

(1) To be eligible for the optional program described in this paragraph (k), the following must apply:

(i) Credits are generated from Otto-cycle heavy-duty engines which have been certified using certification durability demonstration procedures which meet the criteria contained in § 86.004–26 and with deterioration factors calculated in accordance with § 86.004–28.

(ii) During certification, the manufacturer shall declare its intent to include specific engine families in the program described in this paragraph. Separate declarations are required for each program and no engine families may be included in both programs in the same model year.

(2) *Credit generation and use.* (i) Credits shall only be generated by 2000 and later model year engine families.

(ii) Except as provided in paragraph (k)(2)(iii) of this section, credits generated under this paragraph (k) may only be used for 2003 and later model year heavy-duty Otto-cycle engines subject to NO_X or NO_X plus NMHC standards more stringent than 4.0 g/bhp-hr. When used with 2003 and later model year engines, NO_X credits may be used to meet an applicable NO_X plus NMHC standard, except as otherwise provided in § 86.004–10(a)(1)(i)(C).

(iii) If a manufacturer chooses to use credits generated under this paragraph (k) for engine families subject to the NO_X standard contained in § 86.098–10 (4.0 g/bhp-hr) the averaging, trading, and banking of such credits shall be governed by the program provided in §§ 86.094–15(a), (b), (d)–(i) and 86.098–15(c) and shall be subject to all discounting, credit life limits and all other provisions contained in §§ 86.094–15(a), (b), (d)–(i) and 86.098–15(c). In the case where the manufacturer can demonstrate that the credits were discounted under the program provided in this paragraph (k), that discount may be accounted for in the calculation of credits described in § 86.098–15(c).

(iv) For NO_X credits generated under this paragraph (k), a Std value of 2.0 grams per brake horsepower-hour shall be used in place of the current and applicable NO_X standard in the credit availability equation in § 86.098–15(c)(1).

(3) *Program flexibilities.* (i) NO_X credits that are banked under this paragraph (k) and not used as provided by paragraph (k)(2)(iii) of this section may be used without being forfeited due to credit age. The requirement in this paragraph (k)(3) applies instead of the requirements in § 86.094–15(f)(2)(i).

(ii) There are no regional category restraints for averaging, trading, and banking of credits generated under the program described in this paragraph (k) except if they are used under paragraph (k)(2)(iii) of this section. This applies instead of the regional category provisions described in the introductory text of § 86.094–15(d) and (e).

(iii) *Credit discounting.* (A) For NO_X credits generated under this paragraph (k) from engine families with NO_X FELs greater than 1.0 grams per brake horsepower-hour for oxides of nitrogen, a Discount value of 0.9 shall be used instead of 0.8 in the credit availability equation in § 86.098–15(c)(1).

(B) For NO_X credits generated under this paragraph (k) from engine families with NO_X FELs less than or equal to 1.0 grams per brake horsepower-hour for oxides of nitrogen, a Discount value of

1.0 shall be used in place of 0.8 in the credit availability equation in § 86.098–15 (c)(1).

(4) *2003 model year*. Manufacturers selecting Option 1, described in § 86.005–10(f)(1), may not generate or bank early credits under this paragraph (k) for the 2003 model year. Credit generation and banking provisions contained in § 86.004–15 apply for the 2003 model year.

(l) *Credit apportionment*. At the manufacturer's option, credits generated under the provisions described in paragraph (j) or (k) of this section may be sold to or otherwise provided to another party for use in programs other than the averaging, trading and banking program described in this section.

(1) The manufacturer shall pre-identify two emission levels per engine family for the purposes of credit apportionment. One emission level shall be the FEL and the other shall be the level of the standard that the engine family is required to certify to under § 86.098–10 or § 86.098–11, as applicable. For each engine family, the manufacturer may report engine sales in two categories, ''ABT-only credits'' and ''non-manufacturer-owned credits.''

(i) For engine sales reported as ''ABT-only credits'', the credits generated must be used solely in the ABT program described in this section.

(ii) The engine manufacturer may declare a portion of engine sales ''non-manufacturer-owned credits'' and this portion of the credits generated between the standard and the FEL, based on the calculation in § 86.098–15(c)(1), would belong to another party. For ABT, the manufacturer may not generate any credits for the engine sales reported as ''non-manufacturer-owned credits.'' Engines reported as ''non-manufacturer-owned credits'' shall comply with the FEL and the requirements of the ABT program in all other respects.

(2) Only manufacturer-owned credits reported as ''ABT-only credits'' shall be used in the averaging, trading, and banking provisions described in this section.

(3) Credits shall not be double-counted. Credits used in the ABT program may not be provided to an engine purchaser for use in another program.

(4) Manufacturers shall determine and state the number of engines sold as ''ABT-only credits'' and ''non-manufacturer-owned credits'' in the end-of-model year reports required under § 86.098–23.

[65 FR 59944, Oct. 6, 2000]

§ 86.000–16 Prohibition of defeat devices.

Section 86.000–16 includes text that specifies requirements that differ from § 86.094–16. Where a paragraph in § 86.094–16 is identical and applicable to § 86.000–16, this may be indicated by specifying the corresponding paragraph and the statement ''[Reserved]. For guidance see § 86.094–16.''

(a) No new light-duty vehicle, light-duty truck, heavy-duty vehicle, or heavy-duty engine shall be equipped with a defeat device.

(b) The Administrator may test or require testing on any vehicle or engine at a designated location, using driving cycles and conditions which may reasonably be expected to be encountered in normal operation and use, for the purpose of investigating a potential defeat device.

(c) [Reserved]. For guidance see § 86.094–16.

(d) For vehicle and engine designs designated by the Administrator to be investigated for possible defeat devices:

(1) The manufacturer must show to the satisfaction of the Administrator that the vehicle or engine design does not incorporate strategies that unnecessarily reduce emission control effectiveness exhibited during the Federal emissions test procedure when the vehicle or engine is operated under conditions which may reasonably be expected to be encountered in normal operation and use.

(d)(2)–(d)(2)(ii) [Reserved]. For guidance see § 86.094–16.

[61 FR 54881, Oct. 22, 1996, as amended at 65 FR 59945, Oct. 6, 2000]

§ 86.000–21 Application for certification.

Section 86.000–21 includes text that specifies requirements that differ from § 86.094–21, § 86.096–21 or § 86.098–21. Where a paragraph in § 86.094–21, § 86.096–21 or § 86.098–21 is identical and

applicable to § 86.000–21, this may be indicated by specifying the corresponding paragraph and the statement ''[Reserved]. For guidance see § 86.094–21.'' or ''[Reserved]. For guidance see § 86.096–21.'' or ''[Reserved]. For guidance see § 86.098–21.''

(a)–(b)(1)(i)(B) [Reserved]. For guidance see § 86.094–21.

(b)(1)(i)(C) The manufacturer must submit a Statement of Compliance in the application for certification which attests to the fact that they have assured themselves that the engine family is designed to comply with the intermediate temperature cold testing criteria of subpart C of this part, and does not unnecessarily reduce emission control effectiveness of vehicles operating at high altitude or other conditions not experienced within the US06 (aggressive driving) and SC03 (air conditioning) test cycles.

(b)(1)(i)(C)(*I*)–(b)(1)(ii)(C) [Reserved]. For guidance see § 86.094–21.

(b)(2) Projected U.S. sales data sufficient to enable the Administrator to select a test fleet representative of the vehicles (or engines) for which certification is requested, and data sufficient to determine projected compliance with the standards implementation schedules of §§ 86.000–8 and 86.000–9. Volume projected to be produced for U.S. sale may be used in lieu of projected U.S. sales.

(b)(3) A description of the test equipment and fuel proposed to be used.

(b)(4)(i) [Reserved]. For guidance see § 86.098–21.

(b)(4)(ii)–(b)(5)(iv) [Reserved]. For guidance see § 86.094–21.

(b)(5)(v) [Reserved]. For guidance see § 86.098–21.

(b)(6)–(b)(8) [Reserved]. For guidance see § 86.094–21.

(b)(9)–(b)(10)(iii) [Reserved]. For guidance see § 86.098–21.

(c)–(j) [Reserved]. For guidance see § 86.094–21.

(k) and (l) [Reserved]. For guidance see § 86.096–21.

[61 FR 54882, Oct. 22, 1996]

§ 86.000–23 Required data.

Section 86.000–23 includes text that specifies requirements that differ from § 86.095–23 or § 86.098–23. Where a paragraph in § 86.095–23 or § 86.098–23 is identical and applicable to § 86.000–23, this may be indicated by specifying the corresponding paragraph and the statement ''[Reserved]. For guidance see § 86.095–23.'' or ''[Reserved]. For guidance see § 86.098–23.''

(a)–(b)(1)(ii) [Reserved]. For guidance see § 86.095–23.

(b)(2) [Reserved]. For guidance see § 86.098–23.

(b)(3)–(b)(4)(ii) [Reserved]. For guidance see § 86.095–23.

(b)(4)(iii) [Reserved]. For guidance see § 86.098–23.

(c)–(e)(1) [Reserved]. For guidance see § 86.095–23.

(e)(2)–(e)(3) [Reserved]. For guidance see § 86.098–23.

(f)–(k) [Reserved]. For guidance see § 86.095–23.

(l) Additionally, manufacturers certifying vehicles shall submit for each model year 2000 through 2002 light-duty vehicle and light light-duty truck engine family and each model year 2002 through 2004 heavy light-duty truck engine family the information listed in paragraphs (l) (1) and (2) of this section.

(1) Application for certification. In the application for certification, the manufacturer shall submit the projected sales volume of engine families certifying to the respective standards. Volume projected to be produced for U.S. sale may be used in lieu of projected U.S. sales.

(2) End-of-year reports for each engine family.

(i) These end-of-year reports shall be submitted within 90 days of the end of the model year to: Director, Vehicle Programs and Compliance Division, U.S. Environmental Protection Agency, 1200 Pennsylvania Ave., NW., Washington, DC 20460.

(ii) These reports shall indicate the model year, engine family, and the actual U.S. sales volume. The manufacturer may petition the Administrator to allow volume produced for U.S. sale to be used in lieu of U.S. sales. Such petition shall be submitted within 30 days of the end of the model year to the Manufacturers Operations Division. For the petition to be granted, the manufacturer must establish to the satisfaction of the Administrator that

production volume is functionally equivalent to sales volume.

(iii) The U.S. sales volume for end-of-year reports shall be based on the location of the point of sale to a dealer, distributor, fleet operator, broker, or any other entity which comprises the point of first sale.

(iv) Failure by a manufacturer to submit the end-of-year report within the specified time may result in certificate(s) for the engine family(ies) certified to Tier 1 certification standards being voided ab initio plus any applicable civil penalties for failure to submit the required information to the Agency.

(v) These reports shall include the information required under § 86.000–7(h)(1). The information shall be organized in such a way as to allow the Administrator to determine compliance with the SFTP standards implementation schedules of §§ 86.000–8 and 86.000–9.

(m) [Reserved]. For guidance see § 86.098–23.

[61 FR 54882, Oct. 22, 1996]

§ 86.000–24 Test vehicles and engines.

Section 86.000–24 includes text that specifies requirements that differ from § 86.096–24 or § 86.098–24. Where a paragraph in § 86.096–24 or § 86.098–24 is identical and applicable to § 86.000–24, this may be indicated by specifying the corresponding paragraph and the statement ''[Reserved]. For guidance see § 86.096–24.'' or ''[Reserved]. For guidance see § 86.098–24.''

(a) introductory text through (a)(4) [Reserved]. For guidance see § 86.096–24.

(a)(5)–(a)(7) [Reserved]. For guidance see § 86.098–24.

(a)(8)–(b)(1) introductory text [Reserved]. For guidance see § 86.096–24.

(b)(1)(i) Vehicles are chosen to be operated and tested for emission data based upon engine family groupings. Within each engine family, one test vehicle is selected. If air conditioning is projected to be available on any vehicles within the engine family, the Administrator will limit selections to engine codes which have air conditioning available and will require that any vehicle selected under this section has air conditioning installed and operational. The Administrator selects as the test vehicle the vehicle with the heaviest equivalent test weight (including options) within the family which meets the air conditioning eligibility requirement discussed earlier in this section. If more than one vehicle meets this criterion, then within that vehicle grouping, the Administrator selects, in the order listed, the highest road-load power, largest displacement, the transmission with the highest numerical final gear ratio (including overdrive), the highest numerical axle ratio offered in that engine family, and the maximum fuel flow calibration.

(ii) The Administrator selects one additional test vehicle from within each engine family. The additional vehicle selected is the vehicle expected to exhibit the highest emissions of those vehicles remaining in the engine family. The selected vehicle will include an air conditioning engine code unless the Administrator chooses a worst vehicle configuration that is not available with air conditioning. If all vehicles within the engine family are similar, the Administrator may waive the requirements of this paragraph.

(b)(1)(iii)–(b)(1)(vi) [Reserved]. For guidance see § 86.096–24.

(b)(1)(vii)(A)–(b)(1)(viii)(A) [Reserved]. For guidance see § 86.098–24.

(b)(1)(viii)(B)–(e)(2) [Reserved]. For guidance see § 86.096–24.

(f) [Reserved]. For guidance see § 86.098–24.

(g)(1)–(g)(2) [Reserved]. For guidance see § 86.096–24.

(g)(3) Except for air conditioning, where it is expected that 33 percent or less of a carline, within an engine-system combination, will be equipped with an item (whether that item is standard equipment or an option) that can reasonably be expected to influence emissions, that item may not be installed on any emission data vehicle or durability data vehicle of that carline within that engine-system combination, unless that item is standard equipment on that vehicle or specifically required by the Administrator.

(4) Air conditioning must be installed and operational on any emission data vehicle of any vehicle configuration that is projected to be available with air conditioning regardless of the rate of installation of air conditioning within the carline. Section 86.096–24(g) (1)

and (2) and paragraph (g)(3) of this section will be used to determine whether the weight of the air conditioner will be included in equivalent test weight calculations for emission testing.

(h) [Reserved]. For guidance see § 86.096–24.

[61 FR 54882, Oct. 22, 1996]

§ 86.000–25 Maintenance.

Section 86.000–25 includes text that specifies requirements that differ from § 86.094–25 or § 86.098–25. Where a paragraph in § 86.094–25 or § 86.098–25 is identical and applicable to § 86.000–25, this may be indicated by specifying the corresponding paragraph and the statement ''[Reserved]. For guidance see § 86.094–25.'' or ''[Reserved]. For guidance see § 86.098–25.''

(a)(1) Applicability. This section applies to light-duty vehicles, light-duty trucks, and heavy-duty engines.

(a)(2) Maintenance performed on vehicles, engines, subsystems, or components used to determine exhaust, evaporative or refueling emission deterioration factors is classified as either emission-related or non-emission-related and each of these can be classified as either scheduled or unscheduled. Further, some emission-related maintenance is also classified as critical emission-related maintenance.

(b) introductory text through (b)(3)(vi)(D) [Reserved]. For guidance see § 86.094–25.

(b)(3)(vi)(E)–(b)(3)(vi)(J) [Reserved]. For guidance see § 86.098–25.

(b)(3)(vii)–(b)(6)(i)(E) [Reserved]. For guidance see § 86.094–25.

(b)(6)(i)(F) [Reserved]. For guidance see § 86.098–25.

(b)(6)(i)(G)–(H) [Reserved]. For guidance see § 86.094–25.

(i) When air conditioning SFTP exhaust emission tests are required, the manufacturer must document that the vehicle's air conditioning system is operating properly and that system parameters are within operating design specifications prior to test. Required air conditioning system maintenance is performed as unscheduled maintenance and does not require the Administrator's approval.

[61 FR 54883, Oct. 22, 1996]

§ 86.000–26 Mileage and service accumulation; emission measurements.

Section 86.000–26 includes text that specifies requirements that differ from § 86.094–26, § 86.095–26, § 86.096–26 or § 86.098–26. Where a paragraph in § 86.094–26, § 86.095–26, § 86.096–26 or § 86.098–26 is identical and applicable to § 86.000–26, this may be indicated by specifying the corresponding paragraph and the statement ''[Reserved]. For guidance see § 86.094–26.'' or ''[Reserved]. For guidance see § 86.095–26.'' or ''[Reserved]. For guidance see § 86.096–26.'' or ''[Reserved]. For guidance see § 86.098–26.''

(a)(1) [Reserved]. For guidance see § 86.094–26.

(a)(2) The standard method of whole-vehicle service accumulation for durability data vehicles and for emission data vehicles shall be mileage accumulation using the Durability Driving Schedule as specified in appendix IV to this part. A modified procedure may also be used if approved in advance by the Administrator. Except with the advance approval of the Administrator, all vehicles will accumulate mileage at a measured curb weight which is within 100 pounds of the estimated curb weight. If the loaded vehicle weight is within 100 pounds of being included in the next higher inertia weight class as specified in § 86.129, the manufacturer may elect to conduct the respective emission tests at higher loaded vehicle weight.

(3) Emission data vehicles. Unless otherwise provided for in § 86.000–23(a), emission-data vehicles shall be operated and tested as described in paragraph (a)(3)(i)(A) of this section; § 86.094–26(a)(3)(i)(B) and (D), § 86.098–26(a)(3)(i)(C) and (a)(3)(ii)(C), and § 86.094–26(a)(3)(ii) (A), (B) and (D).

(i) Otto-cycle. (A) The manufacturer shall determine, for each engine family, the mileage at which the engine-system combination is stabilized for emission-data testing. The manufacturer shall maintain, and provide to the Administrator if requested, a record of the rationale used in making this determination. The manufacturer may elect to accumulate 4,000 miles on each test vehicle within an engine family without making a determination. The manufacturer must accumulate a

minimum of 2,000 miles (3,219 kilometers) on each test vehicle within an engine family. All test vehicle mileage must be accurately determined, recorded, and reported to the Administrator. Any vehicle used to represent emission-data vehicle selections under § 86.000–24(b)(1) shall be equipped with an engine and emission control system that has accumulated the mileage the manufacturer chose to accumulate on the test vehicle. Fuel economy data generated from certification vehicles selected in accordance with § 86.000–24(b)(1) with engine-system combinations that have accumulated more than 10,000 kilometers (6,200 miles) shall be factored in accordance with 40 CFR 600.006–87(c). Complete exhaust (FTP and SFTP tests), evaporative and refueling (if required) emission tests shall be conducted for each emission-data vehicle selection under § 86.000–24(b)(1). The Administrator may determine under § 86.000–24(f) that no testing is required.

(a)(3)(i)(B) [Reserved]. For guidance see § 86.094–26.

(a)(3)(i)(C) [Reserved]. For guidance see § 86.098–26.

(a)(3)(i)(D)–(a)(3)(ii)(B)[Reserved]. For guidance see § 86.094–26.

(a)(3)(ii)(C) [Reserved]. For guidance see § 86.098–26.

(a)(3)(ii)(D)–(a)(4)(i)(B)(*4*)[Reserved]. For guidance see § 86.094–26.

(a)(4)(i)(C) Complete exhaust emission tests shall be made at nominal test point mileage intervals that the manufacturer determines. Unless the Administrator approves a manufacturer's request to develop specific deterioration factors for aggressive driving (US06) and air conditioning (SC03) test cycle results, tail pipe exhaust emission deterioration factors are determined from only FTP test cycle data. At a minimum, two complete exhaust emission tests shall be made. The first test shall be made at a distance not greater than 6,250 miles. The last shall be made at the mileage accumulation endpoint determined in § 86.094–26 (a)(4)(i) (A) or (B), whichever is applicable.

(a)(4)(i)(D)–(a)(6)(ii) [Reserved]. For guidance see § 86.094–26.

(a)(6)(iii) The results of all emission tests shall be rounded to the number of places to the right of the decimal point indicated by expressing the applicable emission standard of this subpart to one additional significant figure, in accordance with the Rounding-Off Method specified in ASTM E29–90, Standard Practice for Using Significant Digits in Test Data to Determine Conformance with Specifications (incorporated by reference; see § 86.1).

(a)(7)–(a)(9)(i) [Reserved]. For guidance see § 86.094–26.

(a)(9)(ii) The test procedures in §§ 86.106 through 86.149 and § 86.158 will be followed by the Administrator. The Administrator may test the vehicles at each test point. Maintenance may be performed by the manufacturer under such conditions as the Administrator may prescribe.

(a)(9)(iii)–(b)(2) introductory text [Reserved]. For guidance see § 86.094–26.

(b)(2)(i) This paragraph (b)(2)(i) applies to service accumulation conducted under the Standard Self-Approval Durability Program of § 86.094–13(f). The manufacturer determines the form and extent of this service accumulation, consistent with good engineering practice, and describes it in the application for certification. Service accumulation under the Standard Self-Approval Durability Program is conducted on vehicles, engines, subsystems, or components selected by the manufacturer under § 86.000–24(c)(2)(i).

(ii) This paragraph (b)(2)(ii) applies to service accumulation conducted under the Alternative Service Accumulation Durability Program of § 86.094–13(e). The service accumulation method is developed by the manufacturer to be consistent with good engineering practice and to accurately predict the deterioration of the vehicle's emissions in actual use over its full useful life. The method is subject to advance approval by the Administrator and to verification by an in-use verification program conducted by the manufacturer under § 86.094–13(e)(5).

(b)(2)(iii)–(b)(4)(i)(C) [Reserved]. For guidance see § 86.094–26.

(b)(4)(i)(D)–(b)(4)(ii)(D) [Reserved]. For guidance see § 86.095–26.

(b)(4)(iii) [Reserved]

(b)(4)(iv)–(c)(3) [Reserved]. For guidance see § 86.094–26.

(c)(4) [Reserved]. For guidance see § 86.096–26.

(d) introductory text through (d)(2)(i) [Reserved]. For guidance see § 86.094–26.

(d)(2)(ii) The results of all emission tests shall be recorded and reported to the Administrator. These test results shall be rounded, in accordance with the Rounding-Off Method specified in ASTM E29–90, Standard Practice for Using Significant Digits in Test Data to Determine Conformance with Specifications (incorporated by reference; see § 86.1), to the number of decimal places contained in the applicable emission standard expressed to one additional significant figure.

(d)(3)–(d)(6) [Reserved]. For guidance see § 86.094–26.

[61 FR 54883, Oct. 22, 1996]

§ 86.000–28 Compliance with emission standards.

Section 86.000–28 includes text that specifies requirements that differ from § 86.094–28 or § 86.098–28. Where a paragraph in § 86.094–28 or § 86.098–28 is identical and applicable to § 86.000–28, this may be indicated by specifying the corresponding paragraph and the statement ''[Reserved]. For guidance see § 86.094–28.'' or ''[Reserved]. For guidance see § 86.098–28.''

(a)(1) This paragraph (a) applies to light duty vehicles.

(2) Each exhaust, evaporative and refueling emission standard (and family particulate emission limits, as appropriate) of § 86.000–8 applies to the emissions of vehicles for the appropriate useful life as defined in §§ 86.000–2 and 86.000–8.

(a)(3) [Reserved]. For guidance see § 86.094–28.

(a)(4) Introductory text [Reserved]. For guidance see § 86.098–28.

(a)(4)(i) Separate emission deterioration factors for each regulated exhaust constituent shall be determined from the FTP exhaust emission results of the durability-data vehicle(s) for each engine-system combination. Unless the Administrator approves a manufacturer's request to develop specific deterioration factors for US06 and air conditioning (SC03) test results, applicable FTP deterioration factors will also be used to estimate intermediate and full useful life emissions for all SFTP regulated emission levels. Separate evaporative and/or refueling emission deterioration factors shall be determined for each evaporative/refueling emission family-emission control system combination from the testing conducted by the manufacturer (gasoline-fueled and methanol-fueled vehicles only). Separate refueling emission deterioration factors shall be determined for each evaporative/refueling emission family-emission control system combination from the testing conducted by the manufacturer (petroleum-fueled diesel cycle vehicles not certified under the provisions of § 86.098–28(g) only).

(a)(4)(i)(A)–(a)(4)(i)(B)(*2*)(*i*) [Reserved]. For guidance see § 86.094–28.

(a)(4)(i)(B)(*2*)(*ii*) These interpolated values shall be carried out to a minimum of four places to the right of the decimal point before dividing one by the other to determine the deterioration factor. The results shall be rounded to three places to the right of the decimal point in accordance with the Rounding-Off Method specified in ASTM E29–90, Standard Practice for Using Significant Digits in Test Data to Determine Conformance with Specifications (incorporated by reference; see § 86.1).

(a)(4)(i)(B)(*2*)(*iii*)–(a)(4)(i)(B)(*2*)(*iv*) [Reserved]. For guidance see § 86.094–28.

(a)(4)(i)(C)–(a)(4)(i)(D)(*2*) [Reserved]. For guidance see § 86.098–28.

(a)(4)(ii)(A)(*1*) The official exhaust emission test results for each applicable exhaust emission standard for each emission data vehicle at the selected test point shall be multiplied by the appropriate deterioration factor: *Provided*, that if a deterioration factor as computed in paragraph (a)(4)(i)(B)(*2*)(*ii*) of this section is less than one, that deterioration factor shall be one for the purposes of this paragraph. For the SFTP composite standard of ($NMHC+NO_X$), the measured results of NMHC and NO_X must each be multiplied by their corresponding deterioration factors before the composite ($NMHC+NO_X$) standard is calculated.

(*2*) The calculation specified in paragraph (a)(4)(ii)(A)(*1*) of this section may be modified with advance approval of the Administrator for engine-system combinations which are certified under the Alternative Service Accumulation

Durability Program specified in § 86.094–13(e).

(a)(4)(ii)(B)–(a)(4)(ii)(C) [Reserved]. For guidance see § 86.098–28.

(a)(4)(iii) The emissions to compare with the standard (or the family particulate emission limit, as appropriate) shall be the adjusted emissions of § 86.098–28 (a)(4)(ii)(B) and (C) and paragraph (a)(4)(ii)(A) of this section 211a for each emission-data vehicle. For the SFTP composite (NMHC+NO_X) results, the individual deterioration factors must be applied to the applicable NMHC and NO_X test results prior to calculating the adjusted composite (NMHC+NO_X) level that is compared with the standard. The additional composite calculations that are required by the SFTP are discussed in § 86.164–00 (Supplemental federal test procedure calculations). Before any emission value is compared with the standard (or the family particulate emission limit, as appropriate), it shall be rounded to two significant figures in accordance with the Rounding-Off Method specified in ASTM E29–90, Standard Practice for Using Significant Digits in Test Data to Determine Conformance with Specifications (incorporated by reference; see § 86.1). The rounded emission values may not exceed the standard (or the family particulate emission limit, as appropriate).

(a)(4)(iv) [Reserved]. For guidance see § 86.094–28.

(a)(4)(v) [Reserved]. For guidance see § 86.098–28.

(a)(5)–(a)(6) [Reserved]. For guidance see § 86.094–28.

(a)(7) introductory text [Reserved]. For guidance see § 86.098–28.

(a)(7)(i) Separate deterioration factors shall be determined from the exhaust emission results of the durability data vehicles for each emission standard applicable under § 86.000–8, for each engine family group. Unless the Administrator approves a manufacturer's request to develop specific deterioration factors for US06 and air conditioning (SC03) test results, applicable deterioration factors determined from FTP exhaust emission results will also be used to estimate intermediate and full useful life emissions for all SFTP regulated emission levels. The evaporative and/or refueling emission deterioration factors for each evaporative/refueling family will be determined and applied in accordance with § 86.098–28 (a)(4) introductory text, (a)(4)(i)(C) and (D), (a)(4)(ii)(B) and (C), and (a)(4)(v) and § 86.094–28 (a)(4)(i)(A)–(a)(4)(i)(B)(*2*)(*i*), (a)(4)(i)(B)(*2*)(*iii*) and (*iv*), and (a)(4)(iv) and paragraphs (a)(4)(i) introductory, (a)(4)(i)(B)(*2*)(*ii*), (a)(4)(ii)(A), and (a)(4)(iii) of this section.

(a)(7)(ii)–(b)(4)(i) [Reserved]. For guidance see § 86.094–28.

(b)(4)(ii) Separate exhaust emission deterioration factors for each regulated exhaust constituent, determined from tests of vehicles, engines, subsystems, or components conducted by the manufacturer, shall be supplied for each standard and for each engine-system combination. Unless the Administrator approves a manufacturer's request to develop specific deterioration factors for US06 and air conditioning (SC03) test results, applicable deterioration factors determined from FTP exhaust emission results will also be used to estimate intermediate and full useful life emissions for all SFTP regulated emission levels.

(iii) The official exhaust emission results for each applicable exhaust emission standard for each emission data vehicle at the selected test point shall be adjusted by multiplication by the appropriate deterioration factor. However, if the deterioration factor supplied by the manufacturer is less than one, it shall be one for the purposes of this paragraph (b)(4)(iii).

(iv) The emissions to compare with the standard(s) (or the family particulate emission limit, as appropriate) shall be the adjusted emissions of paragraph (b)(4)(iii) of this section for each emission-data vehicle. For the SFTP composite (NMHC+NO_X) results, the individual deterioration factors must be applied to the applicable NMHC and NO_X test results prior to calculating the adjusted composite (NMHC+NO_X) level that is compared with the standard. The additional composite calculations that are required by the SFTP are discussed in § 86.164–00 (Supplemental federal test procedure calculations). Before any emission value is compared with the standard, it shall be rounded to two significant figures in

accordance with the Rounding-Off Method specified in ASTM E29–90, Standard Practice for Using Significant Digits in Test Data to Determine Conformance with Specifications (incorporated by reference; see § 86.1).

(5)(i) Paragraphs (b)(5)(i) (A) and (B) of this section apply only to manufacturers electing to participate in the particulate averaging program.

(A) If a manufacturer chooses to change the level of any family particulate emission limit(s), compliance with the new limit(s) must be based upon existing certification data.

(B) The production-weighted average of the family particulate emission limits of all applicable engine families, rounded to two significant figures in accordance with the Rounding-Off Method specified in ASTM E29–90, Standard Practice for Using Significant Digits in Test Data to Determine Conformance with Specifications (incorporated by reference; see § 86.1), must comply with the particulate standards in § 86.099–9 (a)(1)(iv) or (d)(1)(iv), or the composite particulate standard as defined in § 86.094–2, as appropriate, at the end of the product year.

(ii) Paragraphs (b)(5)(ii) (A) and (B) of this section apply only to manufacturers electing to participate in the NO_X averaging program.

(A) If a manufacturer chooses to change the level of any family NO_X emission limit(s), compliance with the new limit(s) must be based upon existing certification data.

(B) The production-weighted average of the family FTP NO_X emission limits of all applicable engine families, rounded to two significant figures in accordance with the Rounding-Off Method specified in ASTM E29–90, Standard Practice for Using Significant Digits in Test Data to Determine Conformance with Specifications (incorporated by reference; see § 86.1), must comply with the NO_X standards of § 86.099–9(a)(1)(iii) (A) or (B), or the composite NO_X standard as defined in § 86.094–2, at the end of the product year.

(b)(6) [Reserved]

(b)(7)(i)–(b)(7)(iii) [Reserved]. For guidance see § 86.094–28.

(b)(7)(iv) The emission value for each evaporative emission data vehicle to compare with the standards shall be the adjusted emission value of § 86.094–28 (b)(7)(iii) rounded to two significant figures in accordance with the Rounding-Off Method specified in ASTM E29–90, Standard Practice for Using Significant Digits in Test Data to Determine Conformance with Specifications (incorporated by reference; see § 86.1).

(b)(8)–(c)(4)(iii)(B)(*3*) [Reserved]. For guidance see § 86.094–28.

(c)(4)(iv) The emission values for each emission data engine to compare with the standards (or family emission limits, as appropriate) shall be the adjusted emission values of § 86.094–28 (c)(4)(iii), rounded to the same number of significant figures as contained in the applicable standard in accordance with the Rounding-Off Method specified in ASTM E29–90, Standard Practice for Using Significant Digits in Test Data to Determine Conformance with Specifications (incorporated by reference; see § 86.1).

(c)(5)–(d)(4) [Reserved]. For guidance see § 86.094–28.

(d)(5) The emission level to compare with the standard shall be the adjusted emission level of § 86.094–28 (d)(4). Before any emission value is compared with the standard it shall be rounded to two significant figures, in accordance with the Rounding-Off Method specified in ASTM E29–90, Standard Practice for Using Significant Digits in Test Data to Determine Conformance with Specifications (incorporated by reference; see § 86.1). The rounded emission values may not exceed the standard.

(6) Every test vehicle of an evaporative emission family must comply with the evaporative emission standard, as determined in paragraph (d)(5) of this section, before any vehicle in that family may be certified.

(e)–(h) [Reserved]. For guidance see § 86.098–28.

[61 FR 54884, Oct. 22, 1996]

§ 86.001–1 General applicability.

(a) The provisions of this subpart generally apply to 2001 and later model year new Otto-cycle and diesel-cycle heavy-duty engines. In cases where a provision applies only to a certain vehicle group based on its model year, vehicle class, motor fuel, engine type, or

other distinguishing characteristics, the limited applicability is cited in the appropriate section or paragraph. The provisions of this subpart continue to generally apply to 2000 and earlier model year new Otto-cycle and diesel-cycle light-duty vehicles and 2000 and earlier model year new Otto-cycle and diesel-cycle light-duty trucks produced. Provisions generally applicable to all 2001 and later model year new Otto-cycle and diesel-cycle light-duty vehicles and 2001 and later model year new Otto-cycle and diesel-cycle light-duty trucks are located in Subpart S of this part.

(b) *Optional applicability*. (1) A manufacturer may request to certify any heavy-duty vehicle of 14,000 pounds Gross Vehicle Weight Rating or less in accordance with the light-duty truck provisions located in subpart S of this part through the 2004 model year (through the 2003 model year for manufacturers choosing Otto-cycle HDE Option 2 in § 86.005–1(c)(2), or through the 2002 model year for manufacturers choosing Otto-cycle HDE Option 1 in § 86.005–1(c)(1)). Heavy-duty engine or vehicle provisions of this subpart A do not apply to such a vehicle.

(2) Beginning with the 2000 model year, a manufacturer may certify any Otto-cycle heavy-duty vehicle of 14,000 pounds Gross Vehicle Weight Rating or less in accordance with the provisions for Otto-cycle complete heavy-duty vehicles located in subpart S of this part for purposes of generating credits in the heavy-duty vehicle averaging, banking, and trading program contained in § 86.1817–05. Heavy-duty engine or heavy-duty vehicle provisions of this subpart A do not apply to such a vehicle.

(c)–(d) [Reserved]

(e) *Small volume manufacturers*. Special certification procedures are available for any manufacturer whose projected combined U.S. sales of light-duty vehicles, light-duty trucks, heavy-duty vehicles, and heavy-duty engines in its product line (including all vehicles and engines imported under the provisions of §§ 85.1505 and 85.1509 of this chapter) are fewer than 10,000 units for the model year in which the manufacturer seeks certification. To certify its product line under these optional procedures, the small-volume manufacturer must first obtain the Administrator's approval. The manufacturer must meet the eligibility criteria specified in § 86.092–14(b) before the Administrator's approval will be granted. The small-volume manufacturer's certification procedures are described in § 86.092–14.

(f) *Optional procedures for determining exhaust opacity*. (1) The provisions of subpart I of this part apply to tests which are performed by the Administrator, and optionally, by the manufacturer.

(2) Measurement procedures, other than those described in subpart I of this part, may be used by the manufacturer provided the manufacturer satisfies the requirements of § 86.091–23(f).

(3) When a manufacturer chooses to use an alternative measurement procedure it has the responsibility to determine whether the results obtained by the procedure will correlate with the results which would be obtained from the measurement procedure in subpart I of this part. Consequently, the Administrator will not routinely approve or disapprove any alternative opacity measurement procedure or any associated correlation data which the manufacturer elects to use to satisfy the data requirements for subpart I of this part.

(4) If a confirmatory test(s) is performed and the results indicate there is a systematic problem suggesting that the data generated under an optional alternative measurement procedure do not adequately correlate with data obtained in accordance with the procedures described in subpart I of this part, EPA may require that all certificates of conformity not already issued be based on data obtained from procedures described in subpart I of this part.

[64 FR 23920, May 4, 1999, as amended at 65 FR 59945, Oct. 6, 2000]

§ 86.001–2 Definitions.

The definitions of § 86.000–2 continue to apply to 2000 and later model year vehicles. The definitions listed in this section apply beginning with the 2001 model year.

Useful life means:

(1) For light-duty vehicles, and for light light-duty trucks not subject to the Tier 0 standards of § 86.094–9(a), intermediate useful life and/or full useful life. Intermediate useful life is a period of use of 5 years or 50,000 miles, whichever occurs first. Full useful life is a period of use of 10 years or 100,000 miles, whichever occurs first, except as otherwise noted in § 86.094–9. The useful life of evaporative and/or refueling emission control systems on the portion of these vehicles subject to the evaporative emission test requirements of § 86.130–96, and/or the refueling emission test requirements of § 86.151–2001, is defined as a period of use of 10 years or 100,000 miles, whichever occurs first.

(2) For light light-duty trucks subject to the Tier 0 standards of § 86.094–9(a), and for heavy light-duty truck engine families, intermediate and/or full useful life. Intermediate useful life is a period of use of 5 years or 50,000 miles, whichever occurs first. Full useful life is a period of use of 11 years or 120,000 miles, whichever occurs first. The useful life of evaporative emission and/or refueling control systems on the portion of these vehicles subject to the evaporative emission test requirements of § 86.130–96, and/or the refueling emission test requirements of § 86.151–2001, is also defined as a period of 11 years or 120,000 miles, whichever occurs first.

(3) For an Otto-cycle heavy-duty engine family:

(i) For hydrocarbon and carbon monoxide standards, a period of use of 8 years or 110,000 miles, whichever first occurs.

(ii) For the oxides of nitrogen standard, a period of use of 10 years or 110,000 miles, whichever first occurs.

(iii) For the portion of evaporative emission control systems subject to the evaporative emission test requirements of § 86.1230–96, a period of use of 10 years or 110,000 miles, whichever occurs first.

(4) For a diesel heavy-duty engine family:

(i) For light heavy-duty diesel engines, for hydrocarbon, carbon monoxide, and particulate standards, a period of use of 8 years or 110,000 miles, whichever first occurs.

(ii) For light heavy-duty diesel engines, for the oxides of nitrogen standard, a period of use of 10 years or 110,000 miles, whichever first occurs.

(iii) For medium heavy-duty diesel engines, for hydrocarbon, carbon monoxide, and particulate standards, a period of use of 8 years or 185,000 miles, whichever first occurs.

(iv) For medium heavy-duty diesel engines, for the oxides of nitrogen standard, a period of use of 10 years or 185,000 miles, whichever first occurs.

(v) For heavy heavy-duty diesel engines, for hydrocarbon, carbon monoxide, and particulate standards, a period of use of 8 years or 290,000 miles, whichever first occurs, except as provided in paragraph (4)(vii) of this definition.

(vi) For heavy heavy-duty diesel engines, for the oxides of nitrogen standard, a period of use of 10 years or 290,000 miles, whichever first occurs.

(vii) For heavy heavy-duty diesel engines used in urban buses, for the particulate standard, a period of use of 10 years or 290,000 miles, whichever first occurs.

[59 FR 16281, Apr. 6, 1994, as amended at 61 FR 54886, Oct. 22, 1996]

§ 86.001–9 Emission standards for 2001 and later model year light-duty trucks

Section 86.001–9 includes text that specifies requirements that differ from § 86.097–9, § 86.099–9 or § 86.000–9. Where a paragraph in § 86.097–9, § 86.099–9 or § 86.000–9 is identical and applicable to § 86.001–9, this may be indicated by specifying the corresponding paragraph and the statement ''[Reserved]. For guidance see § 86.097–9.'' or ''[Reserved]. For guidance see § 86.099–9.'' or ''[Reserved]. For guidance see § 86.000–9.''

(a)(1) introductory text through (a)(1)(iii) [Reserved]. For guidance see § 86.097–9.

(a)(1)(iv)–(b)(4) [Reserved]. For guidance see § 86.099–9.

(b)(5) [Reserved]

(b)(6) Vehicles certified to the refueling standards set forth in paragraph (d) of this section are not required to demonstrate compliance with the fuel dispensing spitback standards contained in § 86.096–9 (b)(1)(iii) and (b)(2)(iii): Provided, that they meet the requirements of § 86.001–28(f).

(c) [Reserved]. For guidance see § 86.097–9.

(d) Refueling emissions from 2001 and later model year gasoline-fueled and methanol-fueled Otto-cycle and petroleum-fueled and methanol-fueled diesel-cycle light duty trucks of 6,000 pounds or less GVWR shall not exceed the following standards. The standards apply equally to certification and in-use vehicles.

(1) Standards—(i) Hydrocarbons (for gasoline-fueled Otto-cycle and petroleum-fueled diesel-cycle vehicles). 0.20 gram per gallon (0.053 gram per liter) of fuel dispensed.

(ii) Total Hydrocarbon Equivalent (for methanol-fueled vehicles). 0.20 gram per gallon (0.053 gram per liter) of fuel dispensed.

(iii) Hydrocarbons (for liquefied petroleum gas-fueled vehicles). 0.15 gram per gallon (0.04 gram per liter) of fuel dispensed.

(iv) Refueling receptacle (for natural gas-fueled vehicles). Refueling receptacles on natural gas-fueled vehicles shall comply with the receptacle provisions of the ANSI/AGA NGV1–1994 standard (as incorporated by reference in § 86.1).

(2)(i) The standards set forth in paragraphs (d)(1)(i) and (ii) of this section refer to a sample of refueling emissions collected under the conditions as set forth in subpart B of this part and measured in accordance with those procedures.

(ii) For vehicles powered by petroleum-fueled diesel-cycle engines, the provisions set forth in paragraph (d)(1)(i) of this section may be waived: Provided, that the manufacturer complies with the provisions of § 86.001–28(f).

(3) A minimum of the percentage shown in table A01–09 of a manufacturer's sales of the applicable model year's gasoline- and methanol-fueled Otto-cycle and petroleum-fueled and methanol-fueled diesel-cycle light-duty trucks of 6,000 pounds or less GVWR shall be tested under the procedures in subpart B of this part indicated for 2001 and later model years, and shall not exceed the standards described in paragraph (d)(1) of this section. Vehicles certified in accordance with paragraph (d)(2)(ii) of this section, as determined by the provisions of § 86.001–28(g), shall not be counted in the calculation of the percentage of compliance:

TABLE A01–09—IMPLEMENTATION SCHEDULE FOR LIGHT-DUTY TRUCK REFUELING EMISSION TESTING

Model year	Sales percentage
2001	40
2002	80
2003 and subsequent	100

(e) [Reserved]. For guidance see § 86.000–9.

(f) [Reserved]

(g)–(k) [Reserved]. For guidance see § 86.097–9.

[61 FR 54886, Oct. 22, 1996]

§ 86.001–21 Application for certification.

Section 86.001–21 includes text that specifies requirements that differ from § 86.094–21 or § 86.096–21. Where a paragraph in § 86.094–21 or § 86.096–21 is identical and applicable to § 86.001–21, this may be indicated by specifying the corresponding paragraph and the statement ''[Reserved]. For guidance see § 86.094–21.'' or ''[Reserved]. For guidance see § 86.096–21.''

(a)–(b)(1)(i)(B) [Reserved]. For guidance see § 86.094–21.

(b)(1)(i)(C) The manufacturer must submit a Statement of Compliance in the application for certification which attests to the fact that they have assured themselves that the engine family is designed to comply with the intermediate temperature cold testing criteria of subpart C of this part, and does not unnecessarily reduce emission control effectiveness of vehicles operating at high altitude or other conditions not experienced within the US06 (aggressive driving) and SC03 (air conditioning) test cycles.

(b)(1)(i)(C)(*1*)–(b)(1)(ii)(C) [Reserved]. For guidance see § 86.094–21.

(b)(2) Projected U.S. sales data sufficient to enable the Administrator to select a test fleet representative of the vehicles (or engines) for which certification is requested, and data sufficient to determine projected compliance with the standards implementation schedules of § 86.000–8 and 86.000–9. Volume projected to be produced for U.S.

sale may be used in lieu of projected U.S. sales.

(b)(3) A description of the test equipment and fuel proposed to be used.

(b)(4)(i) For light-duty vehicles and light-duty trucks, a description of the test procedures to be used to establish the evaporative emission and/or refueling emission deterioration factors, as appropriate, required to be determined and supplied in § 86.001–23(b)(2).

(b)(4)(ii)–(b)(5)(iv) [Reserved]. For guidance see § 86.094–21.

(b)(5)(v) For light-duty vehicles and applicable light-duty trucks with non-integrated refueling emission control systems, the number of continuous UDDS cycles, determined from the fuel economy on the UDDS applicable to the test vehicle of that evaporative/refueling emission family-emission control system combination, required to use a volume of fuel equal to 85% of fuel tank volume.

(b)(6)–(b)(8) [Reserved]. For guidance see § 86.094–21.

(b)(9) For each light-duty vehicle, light-duty truck, evaporative/refueling emission family or heavy-duty vehicle evaporative emission family, a description of any unique procedures required to perform evaporative and/or refueling emission tests, as applicable, (including canister working capacity, canister bed volume, and fuel temperature profile for the running loss test) for all vehicles in that evaporative and/or evaporative/refueling emission family, and a description of the method used to develop those unique procedures.

(10) For each light-duty vehicle or applicable light-duty truck evaporative/refueling emission family, or each heavy-duty vehicle evaporative emission family:

(i) Canister working capacity, according to the procedures specified in § 86.132–96(h)(1)(iv);

(ii) Canister bed volume; and

(iii) Fuel temperature profile for the running loss test, according to the procedures specified in § 86.129–94(d).

(c)–(j) [Reserved]. For guidance see § 86.094–21.

(k) and (l) [Reserved]. For guidance see § 86.096–21.

[61 FR 54886, Oct. 22, 1996]

§ 86.001–22 Approval of application for certification; test fleet selections; determinations of parameters subject to adjustment for certification and Selective Enforcement Audit, adequacy of limits, and physically adjustable ranges.

Section 86.001–22 includes text that specifies requirements that differ from § 86.094–22. Where a paragraph in § 86.094–22 is identical and applicable to § 86.001–22, this may be indicated by specifying the corresponding paragraph and the statement ''[Reserved]. For guidance see § 86.094–22.''.

(a)–(c) [Reserved]. For guidance see § 86.094–22.

(d) *Approval of test procedures.* (1) The Administrator does not approve the test procedures for establishing the evaporative or refueling emission deterioration factors for light-duty vehicles and light-duty trucks. The manufacturer shall submit the procedures as required in § 86.098–21(b)(4)(i) prior to the Administrator's selection of the test fleet under § 86.098–24(b)(1), and if such procedures will involve testing of durability data vehicles selected by the Administrator or elected by the manufacturer under § 86.098–24(c)(1), prior to initiation of such testing.

(d)(2)–(g) [Reserved]. For guidance see § 86.094–22.

[59 FR 16283, Apr. 6, 1994]

§ 86.001–23 Required data.

Section 86.001–23 includes text that specifies requirements that differ from § 86.095–23, § 86.098–23 or § 86.000–23. Where a paragraph in § 86.095–23, § 86.098–23 or § 86.000–23 is identical and applicable to § 86.001–23, this may be indicated by specifying the corresponding paragraph and the statement ''[Reserved]. For guidance see § 86.095–23.'' or ''[Reserved]. For guidance see § 86.098–23.'' or ''[Reserved]. For guidance see § 86.000–23.''

(a)–(b)(1) [Reserved]. For guidance see § 86.098–23.

(b)(2) For light-duty vehicles and light-duty trucks, the manufacturer shall submit evaporative emission and/or refueling emission deterioration factors for each evaporative/refueling emission family-emission control system combination and all test data that are derived from testing described

under § 86.001–21(b)(4)(i) designed and conducted in accordance with good engineering practice to assure that the vehicles covered by a certificate issued under § 86.001–30 will meet the evaporative and/or refueling emission standards in § 86.099–8 or § 86.001–9, as appropriate, for the useful life of the vehicle.

(b)(3) and (b)(4) [Reserved]. For guidance see § 86.098–23.

(c)(1) [Reserved]. For guidance see § 86.095–23.

(c)(2)–(e)(1) [Reserved]. For guidance see § 86.098–23.

(e)(2) For evaporative and refueling emissions durability, or light-duty truck or HDE exhaust emissions durability, a statement of compliance with paragraph (b)(2) of this section or § 86.098–23 (b)(1)(ii), (b)(3), or (b)(4) as applicable.

(3) For certification of vehicles with non-integrated refueling systems, a statement that the drivedown used to purge the refueling canister was the same as described in the manufacturer's application for certification. Furthermore, a description of the procedures used to determine the number of equivalent UDDS miles required to purge the refueling canisters, as determined by the provisions of § 86.001–21(b)(5)(v) and subpart B of this part. Furthermore, a written statement to the Administrator that all data, analyses, test procedures, evaluations and other documents, on which the above statement is based, are available to the Administrator upon request.

(f)–(g) [Reserved]. For guidance see § 86.095–23.

(h)–(m) [Reserved]. For guidance see § 86.098–23.

[61 FR 54887, Oct. 22, 1996, as amended at 62 FR 54720, Oct. 21, 1997]

§ 86.001–24 Test vehicles and engines.

Section 86.001–24 includes text that specifies requirements that differ from § 86.096–24, § 86.098–24 or § 86.000–24. Where a paragraph in § 86.096–24, § 86.098–24 or § 86.000–9 is identical and applicable to § 86.001–24, this may be indicated by specifying the corresponding paragraph and the statement ''[Reserved]. For guidance see § 86.096–24.'' or ''[Reserved]. For guidance see § 86.098–24.'' or ''[Reserved]. For guidance see § 86.000–24.''

(a)–(a)(4) [Reserved]. For guidance see § 86.096–24.

(a)(5)–(a)(7) [Reserved]. For guidance see § 86.098–24.

(a)(8)–(b)(1) introductory text [Reserved]. For guidance see § 86.096–24.

(b)(1)(i)–(b)(1)(ii) [Reserved]. For guidance see § 86.000–24.

(b)(1)(iii)–(b)(1)(vi) [Reserved]. For guidance see § 86.096–24.

(b)(1)(vii)(A)–(b)(1)(viii)(A) [Reserved]. For guidance see § 86.098–24.

(b)(1)(viii)(B)–(e)(2) [Reserved]. For guidance see § 86.096–24.

(f) Carryover and carryacross of durability and emission data. In lieu of testing an emission-data or durability vehicle (or engine) selected under § 86.096–24(b)(1) introductory text, (b)(1)(iii)–(b)(1)(vi) and § 86.000–24(b)(1)(i)–(b)(1)(ii) and § 86.098–24(b)(1)(vii)(A)–(b)(1)(viii)(A) or § 86.096–24(c), and submitting data therefor, a manufacturer may, with the prior written approval of the Administrator, submit exhaust emission data, evaporative emission data and/or refueling emission data, as applicable, on a similar vehicle (or engine) for which certification has been obtained or for which all applicable data required under § 86.001–23 has previously been submitted.

(g)(1)–(g)(2) [Reserved]. For guidance see § 86.096–24.

(g)(3)–(g)(4) [Reserved]. For guidance see § 86–000–24.

(h) [Reserved]. For guidance see § 86.096–24.

[61 FR 54887, Oct. 22, 1996]

§ 86.001–25 Maintenance.

Section 86.001–25 includes text that specifies requirements that differ from § 86.094–25 or § 86.098–25. Where a paragraph in § 86.094–25 or § 86.098–25 is identical and applicable to § 86.001–25, this may be indicated by specifying the corresponding paragraph and the statement ''[Reserved]. For guidance see § 86.094–25.'' or ''[Reserved]. For guidance see § 86.098–25.''

(a)(1) Applicability. This section applies to light-duty vehicles, light-duty trucks, and heavy-duty engines.

(2) Maintenance performed on vehicles, engines, subsystems, or components used to determine exhaust, evaporative or refueling emission deterioration factors, as appropriate, is classified as either emission-related or non-emission-related and each of these can be classified as either scheduled or unscheduled. Further, some emission-related maintenance is also classified as critical emission-related maintenance.

(b) introductory text through (b)(3)(vi)(D) [Reserved]. For guidance see § 86.094–25.

(b)(3)(vi)(E)–(b)(3)(vi)(J) [Reserved]. For guidance see § 86.098–25.

(b)(3)(vii)–(b)(6)(i)(E) [Reserved]. For guidance see § 86.094–25.

(b)(6)(i)(F) [Reserved]. For guidance see § 86.098–25.

(b)(6)(i)(G)–(H) [Reserved]. For guidance see § 86.094–25.

(i) [Reserved]. For guidance see § 86.000–25.

[61 FR 54887, Oct. 22, 1996]

§ 86.001–26 Mileage and service accumulation; emission measurements.

Section 86.001–26 includes text that specifies requirements that differ from § 86.094–26, § 86.095–26, § 86.096–26, § 86.098–26 or § 86.000–26. Where a paragraph in § 86.094–26, § 86.095–26, § 86.096–26, § 86.098–26 or § 86.000–26 is identical and applicable to § 86.001–26, this may be indicated by specifying the corresponding paragraph and the statement ''[Reserved]. For guidance see § 86.094–26.'' or ''[Reserved]. For guidance see § 86.095–26.'' or ''[Reserved]. For guidance see § 86.096–26.'' or ''[Reserved]. For guidance see § 86.098–26.'' or ''[Reserved]. For guidance see § 86.000–26.''

(a)(1) [Reserved]. For guidance see § 86.094–26.

(a)(2)–(a)(3)(i)(A) [Reserved]. For guidance see § 86.000–26.

(a)(3)(i)(B) [Reserved]. For guidance see § 86.094–26.

(a)(3)(i)(C) [Reserved]. For guidance see § 86.098–26.

(a)(3)(i)(D)–(a)(3)(ii)(B) [Reserved]. For guidance see § 86.094–26.

(a)(3)(ii)(C) [Reserved]. For guidance see § 86.098–26.

(a)(3)(ii)(D)–(a)(4)(i)(B)(*4*) [Reserved]. For guidance see § 86.094–26.

(a)(4)(i)(C) [Reserved]. For guidance see § 86.000–26.

(a)(4)(i)(D)–(a)(6)(ii) [Reserved]. For guidance see § 86.094–26.

(a)(6)(iii) [Reserved]. For guidance see § 86.000–26.

(a)(7)–(a)(9)(i) [Reserved]. For guidance see § 86.094–26.

(a)(9)(ii) [Reserved]. For guidance see § 86.000–26.

(a)(9)(iii)–(b)(2) introductory text [Reserved]. For guidance see § 86.094–26.

(b)(2)(i)–(b)(2)(ii) [Reserved]. For guidance see § 86.000–26.

(b)(2)(iii) [Reserved]. For guidance see § 86.094–26.

(b)(2)(iv) Service or mileage accumulation which may be part of the test procedures used by the manufacturer to establish evaporative and/or refueling emission deterioration factors.

(b)(3)–(b)(4)(i)(B) [Reserved]. For guidance see § 86.094–26.

(b)(4)(i)(C) Exhaust, evaporative and/or refueling emission tests for emission-data vehicle(s) selected for testing under § 86.096–24(b)(1)(ii), (iii) or (iv)(A) or § 86.098–24(b)(1)(vii) shall be conducted at the mileage (2,000 mile minimum) at which the engine-system combination is stabilized for emission testing or at 6,436 kilometer (4,000 mile) test point under low-altitude conditions.

(b)(4)(i)(D)–(b)(4)(ii)(B) [Reserved]. For guidance see § 86.095–26.

(b)(4)(ii)(C) Exhaust, evaporative and/or refueling emission tests for emission data vehicle(s) selected for testing under § 86.094–24(b)(1)(ii), (iii), and (iv) shall be conducted at the mileage (2,000 mile minimum) at which the engine-system combination is stabilized for emission testing or at the 6,436 kilometer (4,000 mile) test point under low-altitude conditions.

(b)(4)(ii)(D) [Reserved]. For guidance see § 86.095–26.

(b)(4)(iii) [Reserved]

(b)(4)(iv)–(c)(3) [Reserved]. For guidance see § 86.094–26.

(c)(4) [Reserved]. For guidance see § 86.096–26.

(d)–(d)(2)(i) [Reserved]. For guidance see § 86.094–26.

(d)(2)(ii) [Reserved]. For guidance see § 86.000–26.

(d)(3)–(d)(6) [Reserved]. For guidance see § 86.094–26.

[61 FR 54888, Oct. 22, 1996]

§ 86.001–28 Compliance with emission standards.

Section 86.001–28 includes text that specifies requirements that differ from § 86.094–28, § 86.098–28 or § 86.000–28. Where a paragraph in § 86.094–28, § 86.098–28 or § 86.000–28 is identical and applicable to § 86.001–28, this may be indicated by specifying the corresponding paragraph and the statement ''[Reserved]. For guidance see § 86.094–28.'' or ''[Reserved]. For guidance see § 86.098–28.'' or ''[Reserved]. For guidance see § 86.000–28.''

(a)(1)–(a)(2) [Reserved]. For guidance see § 86.000–28.

(a)(3) [Reserved]. For guidance see § 86.094–28.

(a)(4) [Reserved]. For guidance see § 86.098–28.

(a)(4)(i) introductory text [Reserved]. For guidance see § 86.000–28.

(a)(4)(i)(A)–(a)(4)(i)(B)(*2*)(*i*) [Reserved]. For guidance see § 86.094–28.

(a)(4)(i)(B)(*2*)(*ii*) [Reserved]. For guidance see § 86.000–28.

(a)(4)(i)(B)(*2*)(*iii*)–(a)(4)(i)(B)(*2*)(*iv*) [Reserved]. For guidance see § 86.094–28.

(a)(4)(i)(C)–(a)(4)(i)(D)(*2*) [Reserved]. For guidance see § 86.098–28.

(a)(4)(ii)(A)(*1*)–(a)(4)(ii)(A)(*2*) [Reserved]. For guidance see § 86.000–28.

(a)(4)(ii)(B)–(a)(4)(ii)(C) [Reserved]. For guidance see § 86.098–28.

(a)(4)(iii) [Reserved]. For guidance see § 86.000–28.

(a)(4)(iv) [Reserved]. For guidance see § 86.094–28.

(a)(4)(v) [Reserved]. For guidance see § 86.098–28.

(a)(5)–(a)(6) [Reserved]. For guidance see § 86.094–28.

(a)(7) introductory text [Reserved]. For guidance see § 86.098–28.

(a)(7)(i) [Reserved]. For guidance see § 86.000–28.

(a)(7)(ii) [Reserved]. For guidance see § 86.094–28.

(b)(1) This paragraph (b) applies to light-duty trucks.

(2) Each exhaust, evaporative and refueling emission standard (and family emission limits, as appropriate) of § 86.001–9 applies to the emissions of vehicles for the appropriate useful life as defined in §§ 86.098–2 and 86.001–9.

(b)(3)–(b)(4)(i) [Reserved]. For guidance see § 86.094–28.

(b)(4)(ii)–(b)(6) [Reserved]. For guidance see § 86.000–28.

(b)(7)(i) This paragraph (b)(7) describes the procedure for determining compliance of a new vehicle with evaporative emission standards. The procedure described here shall be used for all vehicles in applicable model years.

(ii) The manufacturer shall determine, based on testing described in § 86.001–21(b)(4)(i)(A), and supply an evaporative emission deterioration factor for each evaporative/refueling emission family-emission control system combination. The factor shall be calculated by subtracting the emission level at the selected test point from the emission level at the useful life point.

(iii) The official evaporative emission test results for each evaporative/refueling emission-data vehicle at the selected test point shall be adjusted by the addition of the appropriate deterioration factor. However, if the deterioration factor supplied by the manufacturer is less than zero, it shall be zero for the purposes of this paragraph (b)(7)(iii).

(iv) The evaporative emission value for each emission-data vehicle to compare with the standards shall be the adjusted emission value of paragraph (b)(7)(iii) of this section rounded to two significant figures in accordance with the Rounding-Off Method specified in ASTM E29–90, Standard Practice for Using Significant Digits in Test Data to Determine Conformance with Specifications (incorporated by reference; see § 86.1).

(8)(i) This paragraph (b)(8) describes the procedure for determining compliance of a new vehicle with refueling emission standards. The procedure described here shall be used for all applicable vehicles in the applicable model years.

(ii) The manufacturer shall determine, based on testing described in § 86.001–21(b)(4)(i)(B), and supply a refueling emission deterioration factor for each evaporative/refueling emission family-emission control system combination. The factor shall be calculated by subtracting the emission level at the selected test point from the emission level at the useful life point.

(iii) The official refueling emission test results for each evaporative/refueling emission-data vehicle at the selected test point shall be adjusted by the addition of the appropriate deterioration factor. However, if the deterioration factor supplied by the manufacturer is less than zero, it shall be zero for the purposes of this paragraph (b)(8)(iii).

(iv) The emission value for each evaporative emission-data vehicle to compare with the standards shall be the adjusted emission value of paragraph (b)(8)(iii) of this section rounded to two significant figures in accordance with the Rounding-Off Method specified in ASTM E29–90, Standard Practice for Using Significant Digits in Test Data to Determine Conformance with Specifications (incorporated by reference; see § 86.1).

(9) Every test vehicle of an engine family must comply with all applicable standards (and family emission limits, as appropriate), as determined in § 86.000–28(b)(4)(iv) and paragraphs (b)(7)(iv) and (b)(8)(iv) of this section, before any vehicle in that family will be certified.

(c) Introductory text through (c)(4)(iii)(B)(*3*) [Reserved]. For guidance see § 86.094–28.

(c)(4)(iv) [Reserved]. For guidance see § 86.000–28.

(c)(5)–(d)(4) [Reserved]. For guidance see § 86.094–28.

(d)(5)–(d)(6) [Reserved]. For guidance see § 86.000–28.

(e) [Reserved]

(f) Fuel dispensing spitback testing waiver. (1) Vehicles certified to the refueling emission standards set forth in § 86.098–8, 86.099–8 and 86.001–9 are not required to demonstrate compliance with the fuel dispensing spitback standards contained in these sections: Provided, that—

(i) The manufacturer certifies that the vehicle inherently meets the Dispensing Spitback Standard as part of compliance with the refueling emission standard.

(ii) This certification is provided in writing and applies to the full useful life of the vehicle.

(2) EPA retains the authority to require testing to enforce compliance and to prevent non-compliance with the Fuel Dispensing Spitback Standard.

(g) Inherently low refueling emission testing waiver. (1) Vehicles using fuels/fuel systems inherently low in refueling emissions are not required to conduct testing to demonstrate compliance with the refueling emission standards set forth in §§ 86.098–8, 86.099–8 or 86.001–9: Provided, that—

(i) This provision is only available for petroleum diesel fuel. It is only available if the Reid Vapor Pressure of in-use diesel fuel is equal to or less than 1 psi (7 Kpa) and for diesel vehicles whose fuel tank temperatures do not exceed 130 °F (54 °C); and

(ii) To certify using this provision the manufacturer must attest to the following evaluation: ''Due to the low vapor pressure of diesel fuel and the vehicle tank temperatures, hydrocarbon vapor concentrations are low and the vehicle meets the 0.20 grams/gallon refueling emission standard without a control system.''

(2) The certification required in paragraph (g)(1)(ii) of this section must be provided in writing and must apply for the full useful life of the vehicle.

(3) EPA reserves the authority to require testing to enforce compliance and to prevent noncompliance with the refueling emission standard.

(4) Vehicles certified to the refueling emission standard under this provision shall not be counted in the sales percentage compliance determinations for the 2001, 2002 and subsequent model years.

(h) Fixed liquid level gauge waiver. Liquefied petroleum gas-fueled vehicles which contain fixed liquid level gauges or other gauges or valves which can be opened to release fuel or fuel vapor during refueling, and which are being tested for refueling emissions, are not required to be tested with such gauges or valves open, as outlined in § 86.157–98(d)(2), provided the manufacturer can demonstrate, to the satisfaction of the Administrator, that such gauges or valves would not be opened during refueling in-use due to inaccessibility or other design features that would prevent or make it very unlikely that such gauges or valves could be opened.

[61 FR 54888, Oct. 22, 1996]

§ 86.001–30 Certification.

Section 86.001–30 includes text that specifies requirements that differ from § 86.094–30, § 86.095–30 or § 86.098–30. Where a paragraph in § 86.094–30, § 86.095–30 or § 86.098–30 is identical and applicable to § 86.001–30, this may be indicated by specifying the corresponding paragraph and the statement ''[Reserved]. For guidance see § 86.094–30.'' or ''[Reserved]. For guidance see § 86.095–30.'' or ''[Reserved]. For guidance see § 86.098–30.''.

(a)(1) and (a)(2) [Reserved]. For guidance see § 86.094–30.

(a)(3)(i) [Reserved]. For guidance see § 86.098–30.

(a)(3)(ii)–(a)(4)(ii) [Reserved]. For guidance see § 86.095–30.

(a)(4)(iii) introductory text through (a)(4)(iii)(C) [Reserved]. For guidance see § 86.094–30.

(a)(4)(iv) introductory text [Reserved]. For guidance see § 86.095–30.

(a)(4)(iv)(A)–(a)(9) [Reserved]. For guidance see § 86.094–30.

(a)(10) and (a)(11) [Reserved]. For guidance see § 86.098–30.

(a)(12) [Reserved]. For guidance see § 86.094–30.

(a)(13) [Reserved]. For guidance see § 86.095–30.

(a)(14) [Reserved]. For guidance see § 86.094–30.

(a) (15)–(18) [Reserved]. For guidance see § 86.096–30.

(a)(19) [Reserved]. For guidance see § 86.098–30.

(a)(20) For all light-duty trucks certified to refueling emission standards under § 86.001–9, the provisions of paragraphs (a)(20) (i)–(iii) this section apply.

(i) All certificates issued are conditional upon the manufacturer complying with all provisions of § 86.001–9 both during and after model year production.

(ii) Failure to meet the required implementation schedule sales percentages as specified in § 86.001–9 will be considered to be a failure to satisfy the conditions upon which the certificate(s) was issued and the individual vehicles sold in violation of the implementation schedule shall not be covered by the certificate.

(iii) The manufacturer shall bear the burden of establishing to the satisfaction of the Administrator that the conditions upon which the certificate was issued were satisfied.

(b)(1) introductory text through (b)(1)(i) [Reserved]. For guidance see § 86.094–30.

(b)(1)(ii)(A) [Reserved]. For guidance see § 86.094–30.

(b)(1)(ii)(B) The emission data vehicle(s) selected under § 86.001–24(b)(vii) (A) and (B) shall represent all vehicles of the same evaporative/refueling control system within the evaporative/refueling family.

(b)(1)(ii)(C) [Reserved]. For guidance see § 86.094–30.

(b)(1)(ii)(D) The emission-data vehicle(s) selected under § 86.098–24(b)(1)(viii) shall represent all vehicles of the same evaporative/refueling control system within the evaporative/refueling emission family, as applicable.

(b)(1) (iii) and (iv) [Reserved]. For guidance see § 86.094–30.

(b)(2) [Reserved]. For guidance see § 86.098–30.

(b)(3)–(b)(4)(i) [Reserved]. For guidance see § 86.094–30.

(b)(4)(ii) introductory text [Reserved]. For guidance see § 86.098–30.

(b)(4)(ii)(A) [Reserved]. For guidance see § 86.094–30.

(b)(4)(ii)(B)–(iv) [Reserved]. For guidance see § 86.098–30.

(b)(5)–(e) [Reserved]. For guidance see § 86.094–30.

(f) introductory text through (f)(3) [Reserved]. For guidance see § 86.095–30.

(f)(4) [Reserved]. For guidance see § 86.098–30.

[59 FR 16285, Apr. 6, 1994, as amended at 62 FR 54720, Oct. 21, 1997]

§ 86.001–35 Labeling.

Section 86.001–35 includes text that specifies requirements that differ from § 86.095–35, § 86.096–35 and § 86.098–35. Where a paragraph in § 86.095–35, § 86.096–35 or § 86.098–35 is identical and applicable to § 86.001–35, this may be indicated by specifying the corresponding paragraph and the statement ''[Reserved]. For guidance see § 86.095–35.'' or [Reserved]. For guidance see § 86.096–35. or ''[Reserved]. For guidance see § 86.098–28.''.

(a) introductory text through (a)(1)(iii)(B) [Reserved]. For guidance see § 86.095–35.

(a)(1)(iii)(C) [Reserved]. For guidance see § 86.098–35.

(a)(1)(iii)(D)–(L) [Reserved]. For guidance see § 86.095–35.

(a)(1)(iii)(M) [Reserved]. For guidance see § 86.098–35.

(a)(1)(iii)(N) [Reserved]. For guidance see § 86.096–35.

(a)(2) heading through (a)(2)(iii)(B) [Reserved]. For guidance see § 86.095–35.

(a)(2)(iii)(C) Engine displacement (in cubic inches or liters), engine family identification and evaporative/refueling family identification.

(a)(2)(iii)(D)–(a)(2)(iii)(E) [Reserved]. For guidance see § 86.095–35.

(a)(2)(iii)(F) [Reserved]

(a)(2)(iii)(G)–(a)(2)(iii)(K) [Reserved]. For guidance see § 86.095–35.

(a)(2)(iii)(L) [Reserved]

(a)(2)(iii)(M)–(a)(2)(iii)(N) [Reserved]. For guidance see § 86.095–35.

(a)(2)(iii) (O)–(P) [Reserved]. For guidance see § 86.096–35.

(a)(3) heading through (a)(4)(iii)(F) [Reserved]. For guidance see § 86.095–35.

(a)(4)(ii)(G) [Reserved]. For guidance see § 86.096–35.

(b)–(i) [Reserved]. For guidance see § 86.095–35.

[59 FR 16285, Apr. 6, 1994]

§ 86.004–2 Definitions.

The definitions of § 86.001–2 continue to apply to 2001 and later model year vehicles. The definitions listed in this section apply beginning with the 2004 model year.

Defeat device means an auxiliary emission control device (AECD) that reduces the effectiveness of the emission control system under conditions which may reasonably be expected to be encountered in normal vehicle operation and use, unless:

(1) Such conditions are substantially included in the applicable Federal emission test procedure for heavy-duty vehicles and heavy-duty engines described in subpart N of this part;

(2) The need for the AECD is justified in terms of protecting the vehicle against damage or accident; or

(3) The AECD does not go beyond the requirements of engine starting.

U.S.-directed production means the engines and/or vehicles (as applicable) produced by a manufacturer for which the manufacturer has reasonable assurance that sale was or will be made to ultimate purchasers in the United States, excluding engines and/or vehicles that are certified to state emission standards different than the emission standards in this part.

Useful life means:

(1) For light-duty vehicles, and for light light-duty trucks not subject to the Tier 0 standards of § 86.094–9(a), intermediate useful life and/or full useful life. Intermediate useful life is a period of use of 5 years or 50,000 miles, whichever occurs first. Full useful life is a period of use of 10 years or 100,000 miles, whichever occurs first, except as otherwise noted in § 86.094–9. The useful life of evaporative and/or refueling emission control systems on the portion of these vehicles subject to the evaporative emission test requirements of § 86.130–96, and/or the refueling emission test requirements of § 86.151–98, is defined as a period of use of 10 years or 100,000 miles, whichever occurs first.

(2) For light light-duty trucks subject to the Tier 0 standards of § 86.094–9(a), and for heavy light-duty truck engine families, intermediate and/or full useful life. Intermediate useful life is a period of use of 5 years or 50,000 miles, whichever occurs first. Full useful life is a period of use of 11 years or 120,000 miles, whichever occurs first. The useful life of evaporative emission and/or refueling control systems on the portion of these vehicles subject to the evaporative emission test requirements of § 86.130–96, and/or the refueling emission test requirements of § 86.151–98, is also defined as a period of 11 years or 120,000 miles, whichever occurs first.

(3) For an Otto-cycle HDE family:

(i) For hydrocarbon and carbon monoxide standards, a period of use of 10 years or 110,000 miles, whichever first occurs.

(ii) For the oxides of nitrogen standard, a period of use of 10 years or 110,000 miles, whichever first occurs.

(iii) For the portion of evaporative emission control systems subject to the evaporative emission test requirements of § 86.1230–96, a period of use of 10 years or 110,000 miles, whichever first occurs.

(4) For a diesel HDE family:

(i) For light heavy-duty diesel engines, for carbon monoxide, particulate, and oxides of nitrogen plus nonmethane hydrocarbons emissions standards, a period of use of 10 years or 110,000 miles, whichever first occurs.

(ii) For medium heavy-duty diesel engines, for carbon monoxide, particulate, and oxides of nitrogen plus nonmethane hydrocarbons emission standards, a period of use of 10 years or 185,000 miles, whichever first occurs.

(iii) For heavy heavy-duty diesel engines, for carbon monoxide, particulate, and oxides of nitrogen plus nonmethane hydrocarbon emissions standards, a period of use of 10 years or 435,000 miles, or 22,000 hours, whichever first occurs, except as provided in paragraphs (4)(iv) and (4)(v) of this definition.

(iv) The useful life limit of 22,000 hours in paragraph (4)(iii) of this definition is effective as a limit to the useful life only when an accurate hours meter is provided by the manufacturer with the engine and only when such hours meter can reasonably be expected to operate properly over the useful life of the engine.

(v) For an individual engine, if the useful life hours limit of 22,000 hours is reached before the engine reaches 10 years or 100,000 miles, the useful life shall become 10 years or 100,000 miles, whichever occurs first, as required under Clean Air Act section 202(d).

(5) As an option for both light-duty trucks under certain conditions and HDE families, an alternative useful life period may be assigned by the Administrator under the provisions of § 86.094–21(f).

Warranty period, for purposes of HDE emissions defect warranty and emissions performance warranty, shall be a period of 5 years/50,000 miles, whichever occurs first, for Otto-cycle HDEs and light heavy-duty diesel engines. For all other heavy-duty diesel engines the aforementioned period shall be 5 years/100,000 miles, whichever occurs first. However, in no case may this period be less than the basic mechanical warranty period that the manufacturer provides (with or without additional charge) to the purchaser of the engine. Extended warranties on select parts do not extend the emissions warranty requirements for the entire engine but only for those parts. In cases where responsibility for an extended warranty is shared between the owner and the manufacturer, the emissions warranty shall also be shared in the same manner as specified in the warranty agreement.

[62 FR 54720, Oct. 21, 1997, as amended at 65 FR 59945, Oct. 6, 2000; 66 FR 5159, Jan. 18, 2001]

§ 86.004–9 Emission standards for 2004 and later model year light-duty trucks.

Section 86.004–9 includes text that specifies requirements that differ from § 86.097–9, § 86.099–9, § 86.000–9 or § 86.001–9. Where a paragraph in § 86.097–9, § 86.099–9, § 86.000–9 or § 86.001–9 is identical and applicable to § 86.004–9, this may be indicated by specifying the corresponding paragraph and the statement ''[Reserved]. For guidance see § 86.097–9.'' or ''[Reserved]. For guidance see § 86.099–9.'' or ''[Reserved]. For guidance see § 86.000–9.'' or ''[Reserved]. For guidance see § 86.001–9.''

(a)(1) introductory text through (a)(1)(iii) [Reserved]. For guidance see § 86.097–9.

(a)(1)(iv)–(b)(4) [Reserved]. For guidance see § 86.099–9.

(b)(5) [Reserved]

(b)(6) [Reserved]. For guidance see § 86.001–9.

(c) [Reserved]. For guidance see § 86.097–9.

(d) Refueling emissions from 2004 and later model year gasoline-fueled and methanol-fueled Otto-cycle and petroleum-fueled and methanol-fueled diesel-cycle light-duty trucks shall not exceed the following standards. The standards apply equally to certification and in-use vehicles.

(d)(1)–(d)(2)(ii) [Reserved]. For guidance see § 86.001–9.

(d)(2)(iii) Heavy-duty vehicles certified as light-duty trucks under the provisions of § 86.085–1 shall comply with the provisions of § 86.001–9 (d)(1)(i) and (ii).

(3)(i) All light-duty trucks of a GVWR equal to 6,000 pounds or less (100%) must meet the refueling emission standard.

(ii) A minimum of the percentage shown in table A04–09 of a manufacturer's sales of the applicable model year's gasoline- and methanol-fueled Otto-cycle and petroleum-fueled and methanol-fueled diesel-cycle light-duty trucks of 6,001 to 8,500 pounds GVWR shall be tested under the procedures in subpart B of this part indicated for 2004 and later model years, and shall not exceed the standards described in § 86.001–9 (d)(1). Vehicles certified in accordance with § 86.001–9 (d)(2)(ii), as determined by the provisions of § 86.001–28(g), shall not be counted in the calculation of the percentage of compliance:

TABLE A04–09—IMPLEMENTATION SCHEDULE FOR LIGHT-DUTY TRUCK REFUELING EMISSION TESTING

Model year	Sales percentage
2004	40
2005	80
2006 and subsequent	100

(e) [Reserved]. For guidance see § 86.000–9.

(f) [Reserved]

(g)–(k) [Reserved]. For guidance see § 86.097–9.

[61 FR 54889, Oct. 22, 1996]

§ 86.004–11 Emission standards for 2004 and later model year diesel heavy-duty engines and vehicles.

This section applies to 2004 and later model year diesel HDEs.

(a)(1) Exhaust emissions from new 2004 and later model year diesel HDEs shall not exceed the following:

(i)(A) Oxides of Nitrogen plus Non-methane Hydrocarbons (NO_X +NMHC) for engines fueled with either petroleum fuel, natural gas, or liquefied petroleum gas, 2.4 grams per brake horsepower-hour (0.89 gram per megajoule), as measured under transient operating conditions.

(B) Oxides of Nitrogen plus Non-methane Hydrocarbon Equivalent (NO_X+NMHCE) for engines fueled with methanol, 2.4 grams per brake horsepower-hour (0.89 gram per megajoule), as measured under transient operating conditions.

(C) *Optional standard.* Manufacturers may elect to certify to an Oxides of Nitrogen plus Non-methane Hydrocarbons (or equivalent for methanol-fueled engines) standard of 2.5 grams per brake horsepower-hour (0.93 gram per megajoule), as measured under transient operating conditions, provided that Non-methane Hydrocarbons (or equivalent for methanol-fueled engines) do not exceed 0.5 grams per brake horsepower-hour (0.19 gram per megajoule) NMHC (or NMHCE for methanol-fueled engines), as measured under transient operating conditions.

(D) A manufacturer may elect to include any or all of its diesel HDE families in any or all of the emissions ABT programs for HDEs, within the restrictions described in § 86.004–15 or superseding applicable sections. If the manufacturer elects to include engine families in any of these programs, the NO_X plus NMHC (or NO_X plus NMHCE for methanol-fueled engines) FELs may not exceed 4.5 grams per brake horsepower-hour (1.7 grams per megajoule). This ceiling value applies whether credits for the family are derived from averaging, banking, or trading programs. Additionally, families certified to the optional standard contained in paragraph (a)(1)(i)(C) of this section shall not exceed 0.50 grams per brake horsepower-hour (0.19 gram per megajoule) NMHC (or NMHCE for methanol-fueled engines) through the use of credits.

(E) [Reserved]

(ii) *Carbon monoxide.* (A) 15.5 grams per brake horsepower-hour (5.77 grams per megajoule), as measured under transient operating conditions.

(B) 0.50 percent of exhaust gas flow at curb idle (methanol-, natural gas-, and liquefied petroleum gas-fueled diesel HDEs only).

(iii) *Particulate.* (A) For diesel engines to be used in urban buses, 0.05 gram per brake horsepower-hour (0.019 gram per megajoule) for certification testing and selective enforcement audit testing, and 0.07 gram per brake horsepower-hour (0.026 gram per megajoule) for in-use testing, as measured under transient operating conditions.

(B) For all other diesel engines, 0.10 gram per brake horsepower-hour (0.037 gram per megajoule), as measured under transient operating conditions.

(C) A manufacturer may elect to include any or all of its diesel HDE families in any or all of the particulate ABT programs for HDEs, within the restrictions described in § 86.004–15 or superseding applicable sections. If the manufacturer elects to include engine families in any of these programs, the particulate FEL may not exceed 0.25 gram per brake horsepower-hour (0.093 gram per megajoule).

(2) The standards set forth in paragraph (a)(1) of this section refer to the exhaust emitted over the operating schedule set forth in paragraph (f)(2) of appendix I to this part, and measured and calculated in accordance with the procedures set forth in subpart N or P of this part, except as noted in § 86.098–23(c)(2) or superceding sections.

(b)(1) The opacity of smoke emission from new 2004 and later model year diesel HDEs shall not exceed:

(i) 20 percent during the engine acceleration mode.

(ii) 15 percent during the engine lugging mode.

(iii) 50 percent during the peaks in either mode.

(2) The standards set forth in paragraph (b)(1) of this section refer to exhaust smoke emissions generated under the conditions set forth in subpart I of this part and measured and calculated in accordance with those procedures.

(3) Evaporative emissions (total of non-oxygenated hydrocarbons plus methanol) from heavy-duty vehicles equipped with methanol-fueled diesel engines shall not exceed the following standards. The standards apply equally to certification and in-use vehicles. The spitback standard also applies to newly assembled vehicles.

(i) For vehicles with a Gross Vehicle Weight Rating of up to 14,000 lbs:

(A)(*1*) For the full three-diurnal test sequence described in § 86.1230–96, diurnal plus hot soak measurements: 3.0 grams per test.

(*2*) For the supplemental two-diurnal test sequence described in § 86.1230–96, diurnal plus hot soak measurements: 3.5 grams per test.

(B) Running loss test: 0.05 grams per mile.

(C) Fuel dispensing spitback test: 1.0 gram per test.

(ii) For vehicles with a Gross Vehicle Weight Rating of greater than 14,000 lbs:

(A)(*1*) For the full three-diurnal test sequence described in § 86.1230–96, diurnal plus hot soak measurements: 4.0 grams per test.

(*2*) For the supplemental two-diurnal test sequence described in § 86.1230–96, diurnal plus hot soak measurements: 4.5 grams per test.

(B) Running loss test: 0.05 grams per mile.

(iii)(A) For vehicles with a Gross Vehicle Weight Rating of up to 26,000 lbs, the standards set forth in paragraph (b)(3) of this section refer to a composite sample of evaporative emissions collected under the conditions and measured in accordance with the procedures set forth in subpart M of this part. For certification vehicles only, manufacturers may conduct testing to quantify a level of nonfuel background emissions for an individual test vehicle. Such a demonstration must include a description of the source(s) of emissions and an estimated decay rate. The demonstrated level of nonfuel background emissions may be subtracted from emission test results from certification vehicles if approved in advance by the Administrator.

(B) For vehicles with a Gross Vehicle Weight Rating of greater than 26,000 lbs., the standards set forth in paragraph (b)(3)(ii) of this section refer to the manufacturer's engineering design evaluation using good engineering practice (a statement of which is required in § 86.091–23(b)(4)(ii)).

(iv) All fuel vapor generated during in-use operations shall be routed exclusively to the evaporative control system (e.g., either canister or engine purge). The only exception to this requirement shall be for emergencies.

(4) Evaporative emissions from 2004 and later model year heavy-duty vehicles equipped with natural gas-fueled or liquefied petroleum gas-fueled HDEs shall not exceed the following standards. The standards apply equally to certification and in-use vehicles.

(i) For vehicles with a Gross Vehicle Weight Rating of up to 14,000 pounds for the full three-diurnal test sequence described in § 86.1230–96, diurnal plus

hot soak measurements: 3.0 grams per test.

(ii) For vehicles with a Gross Vehicle Weight Rating of greater than 14,000 pounds for the full three-diurnal test sequence described in § 86.1230–96, diurnal plus hot soak measurements: 4.0 grams per test.

(iii)(A) For vehicles with a Gross Vehicle Weight Rating of up to 26,000 pounds, the standards set forth in paragraph (b)(4) of this section refer to a composite sample of evaporative emissions collected under the conditions set forth in subpart M of this part and measured in accordance with those procedures.

(B) For vehicles with a Gross Vehicle Weight Rating greater than 26,000 pounds, the standards set forth in paragraphs (b)(3)(ii) and (b)(4)(ii) of this section refer to the manufacturer's engineering design evaluation using good engineering practice (a statement of which is required in § 86.091–23(b)(4)(ii)).

(c) No crankcase emissions shall be discharged into the ambient atmosphere from any new 2004 or later model year methanol-, natural gas-, or liquefied petroleum gas-fueled diesel, or any naturally-aspirated diesel HDE. For petroleum-fueled engines only, this provision does not apply to engines using turbochargers, pumps, blowers, or superchargers for air induction.

(d) Every manufacturer of new motor vehicle engines subject to the standards prescribed in this section shall, prior to taking any of the actions specified in section 203(a)(1) of the Act, test or cause to be tested motor vehicle engines in accordance with applicable procedures in subpart I or N of this part to ascertain that such test engines meet the requirements of this section.

(e) The standards described in this section do not apply to diesel-fueled medium-duty passenger vehicles (MDPVs) that are subject to regulation under subpart S of this part, except as specified in subpart S of this part. The standards described in this section also do not apply to diesel engines used in such MDPVs, except as specified in the regulations in subpart S of this part. The term ''medium-duty passenger vehicle'' is defined in § 86.1803.

[62 FR 54721, Oct. 21, 1997, as amended at 65 FR 6848, Feb. 10, 2000; 65 FR 59945, Oct. 6, 2000]

§ 86.004–15 NO_X plus NMHC and particulate averaging, trading, and banking for heavy-duty engines.

(a)(1) Heavy-duty engines eligible for NO_X plus NMHC and particulate averaging, trading and banking programs are described in the applicable emission standards sections in this subpart. All heavy-duty engine families which include any engines labeled for use in clean-fuel vehicles as specified in 40 CFR part 88 are not eligible for these programs. For manufacturers not selecting Options 1 or 2 contained in § 86.005–10(f), the ABT program requirements contained in § 86.000–15 apply for 2004 model year Otto-cycle engines, rather than the provisions contained in this § 86.004–15. Participation in these programs is voluntary.

(2)(i) Engine families with FELs exceeding the applicable standard shall obtain emission credits in a mass amount sufficient to address the shortfall. Credits may be obtained from averaging, trading, or banking, within the averaging set restrictions described in this section.

(ii) Engine families with FELs below the applicable standard will have emission credits available to average, trade, bank or a combination thereof. Credits may not be used for averaging or trading to offset emissions that exceed an FEL. Credits may not be used to remedy an in-use nonconformity determined by a Selective Enforcement Audit or by recall testing. However, credits may be used to allow subsequent production of engines for the family in question if the manufacturer elects to recertify to a higher FEL.

(b) Participation in the NO_X plus NMHC and/or particulate averaging, trading, and banking programs shall be done as follows:

(1) During certification, the manufacturer shall:

(i) Declare its intent to include specific engine families in the averaging, trading and/or banking programs. Separate declarations are required for each

program and for each pollutant (*i.e.*, NO_X plus NMHC, and particulate).

(ii) Declare an FEL for each engine family participating in one or more of these two programs.

(A) The FEL must be to the same level of significant digits as the emission standard (one-tenth of a gram per brake horsepower-hour for NO_X plus NMHC emissions and one-hundredth of a gram per brake horsepower-hour for particulate emissions).

(B) In no case may the FEL exceed the upper limit prescribed in the section concerning the applicable heavy-duty engine NO_X plus NMHC and particulate emission standards.

(iii) Calculate the projected emission credits (positive or negative) based on quarterly production projections for each participating family and for each pollutant, using the applicable equation in paragraph (c) of this section and the applicable factors for the specific engine family.

(iv)(A) Determine and state the source of the needed credits according to quarterly projected production for engine families requiring credits for certification.

(B) State where the quarterly projected credits will be applied for engine families generating credits.

(C) Credits may be obtained from or applied to only engine families within the same averaging set as described in paragraph (d) or (e) of this section. Credits available for averaging, trading, or banking as defined in § 86.090–2, may be applied exclusively to a given engine family, or reserved as defined in § 86.091–2.

(2) Based on this information each manufacturer's certification application must demonstrate:

(i) That at the end of model year production, each engine family has a net emissions credit balance of zero or more using the methodology in paragraph (c) of this section with any credits obtained from averaging, trading or banking.

(ii) The source of the credits to be used to comply with the emission standard if the FEL exceeds the standard, or where credits will be applied if the FEL is less than the emission standard. In cases where credits are being obtained, each engine family involved must state specifically the source (manufacturer/engine family) of the credits being used. In cases where credits are being generated/supplied, each engine family involved must state specifically the designated use (manufacturer/engine family or reserved) of the credits involved. All such reports shall include all credits involved in averaging, trading or banking.

(3) During the model year manufacturers must:

(i) Monitor projected versus actual production to be certain that compliance with the emission standards is achieved at the end of the model year.

(ii) Provide the end-of-model year reports required under § 86.001–23.

(iii) For manufacturers participating in emission credit trading, maintain the quarterly records required under § 86.091–7(c)(8).

(4) Projected credits based on information supplied in the certification application may be used to obtain a certificate of conformity. However, any such credits may be revoked based on review of end-of-model year reports, follow-up audits, and any other compliance measures deemed appropriate by the Administrator.

(5) Compliance under averaging, banking, and trading will be determined at the end of the model year. Engine families without an adequate amount of NO_X. NO_X plus NMHC, and/or particulate emission credits will violate the conditions of the certificate of conformity. The certificates of conformity may be voided ab initio for engine families exceeding the emission standard.

(6) If EPA or the manufacturer determines that a reporting error occurred on an end-of-year report previously submitted to EPA under this section, the manufacturer's credits and credit calculations will be recalculated. Erroneous positive credits will be void. Erroneous negative balances may be adjusted by EPA for retroactive use.

(i) If EPA review of a manufacturer's end-of-year report indicates a credit shortfall, the manufacturer will be permitted to purchase the necessary credits to bring the credit balance for that engine family to zero, using the discount specified in paragraph (c)(1) of

this section on the ratio of credits purchased for every credit needed to bring the balance to zero. If sufficient credits are not available to bring the credit balance for the family in question to zero, EPA may void the certificate for that engine family ab initio.

(ii) If within 180 days of receipt of the manufacturer's end-of-year report, EPA review determines a reporting error in the manufacturer's favor (i.e., resulting in a positive credit balance) or if the manufacturer discovers such an error within 180 days of EPA receipt of the end-of-year report, the credits will be restored for use by the manufacturer.

(c)(1) For each participating engine family, NO_X plus NMHC, and particulate emission credits (positive or negative) are to be calculated according to one of the following equations and rounded, in accordance with ASTM E29–93a (incorporated by reference at § 86.1), to the nearest one-tenth of a Megagram (Mg). Consistent units are to be used throughout the equation.

(i) For determining credit need for all engine families and credit availability for engine families generating credits for averaging programs only:

$$\text{Emission credits} = (\text{Std} - \text{FEL}) \times (\text{CF}) \times (\text{UL}) \times (\text{Production}) \times (10^{-6})$$

(ii) For determining credit availability for engine families generating credits for trading or banking programs:

$$\text{Emission credits} = (\text{Std} - \text{FEL}) \times (\text{CF}) \times (\text{UL}) \times (\text{Production}) \times (10^{-6}) \times (\text{Discount})$$

(iii) For purposes of the equation in paragraphs (c)(1)(i) and (ii) of this section:

Std = the current and applicable heavy-duty engine NO_X plus NMHC or particulate emission standard in grams per brake horsepower hour or grams per Megajoule.

FEL = the NO_X plus NMHC, or particulate family emission limit for the engine family in grams per brake horsepower hour or grams per Megajoule.

CF = a transient cycle conversion factor in BHP-hr/mi or MJ/mi, as given in paragraph (c)(2) of this section.

UL = the useful life described in § 86.004–2, or alternative life as described in § 86.004–21(f), for the given engine family in miles.

Production = the number of engines produced for U.S. sales within the given engine family during the model year. Quarterly production projections are used for initial certification. Actual production is used for end-of-year compliance determination.

Discount = a one-time discount applied to all credits to be banked or traded within the model year generated. Except as otherwise allowed in paragraphs (k) and (l) of this section, the discount applied here is 0.9. Banked credits traded in a subsequent model year will not be subject to an additional discount. Banked credits used in a subsequent model year's averaging program will not have the discount restored.

(2)(i) The transient cycle conversion factor is the total (integrated) cycle brake horsepower-hour or Megajoules, divided by the equivalent mileage of the applicable transient cycle. For Otto-cycle heavy-duty engines, the equivalent mileage is 6.3 miles. For diesel heavy-duty engines, the equivalent mileage is 6.5 miles.

(ii) When more than one configuration is chosen by EPA to be tested in the certification of an engine family (as described in § 86.085–24), the conversion factor used is to be based upon a production weighted average value of the configurations in an engine family to calculate the conversion factor.

(d) *Averaging sets for NO_X plus NMHC emission credits.* The averaging and trading of NO_X plus NMHC emission credits will only be allowed between heavy-duty engine families in the same averaging set. The averaging sets for the averaging and trading of NO_X plus NMHC emission credits for heavy-duty engines are defined as follows:

(1) For NO_X+NMHC credits from Otto-cycle heavy-duty engines:

(i) Otto-cycle heavy-duty engines constitute an averaging set. Averaging and trading among all Otto-cycle heavy-duty engine families is allowed. There are no subclass restrictions.

(ii) Otto-cycle heavy-duty vehicles certified under the chassis-based provisions of Subpart S of this Part may not average or trade with heavy-duty Otto-cycle engines except as allowed in § 86.1817–05(o).

(2) For NO_X plus NMHC credits from diesel-cycle heavy-duty engines:

(i) Each of the three primary intended service classes for heavy-duty diesel engines, as defined in § 86.004–2, constitute an averaging set. Averaging

and trading among all diesel-cycle engine families within the same primary service class is allowed.

(ii) Urban buses are treated as members of the primary intended service class where they otherwise would fall.

(e) *Averaging sets for particulate emission credits.* The averaging and trading of particulate emission credits will only be allowed between diesel cycle heavy-duty engine families in the same averaging set. The averaging sets for the averaging and trading of particulate emission credits for diesel cycle heavy-duty engines are defined as follows:

(1) Engines intended for use in urban buses constitute a separate averaging set from all other heavy-duty engines. Averaging and trading between diesel cycle bus engine families is allowed.

(2) For heavy-duty engines, exclusive of urban bus engines, each of the three primary intended service classes for heavy-duty diesel cycle engines, as defined in § 86.004–2, constitute an averaging set. Averaging and trading between diesel-cycle engine families within the same primary service class is allowed.

(3) Otto cycle engines may not participate in particulate averaging, trading, or banking.

(f) *Banking of NO_X plus NMHC, and particulate emission credits*—(1) *Credit deposits.* (i) NO_X plus NMHC, and particulate emission credits may be banked from engine families produced in any model year.

(ii) Manufacturers may bank credits only after the end of the model year and after actual credits have been reported to EPA in the end-of-year report. During the model year and before submittal of the end-of-year report, credits originally designated in the certification process for banking will be considered reserved and may be redesignated for trading or averaging.

(2) *Credit withdrawals.* (i) NO_X plus NMHC and particulate credits generated in 2004 and later model years do not expire. NO_X plus NMHC credits generated by Otto-cycle engines in the 2003 model year for manufacturers selecting Option 1 contained in § 86.005–10(f)(1) also do not expire.

(ii) Manufacturers withdrawing banked NO_X plus NMHC, and/or particulate credits shall indicate so during certification and in their credit reports, as described in § 86.091–23.

(3) *Use of banked emission credits.* The use of banked credits shall be within the averaging set and other restrictions described in paragraphs (d) and (e) of this section, and only for the following purposes:

(i) Banked credits may be used in averaging, or in trading, or in any combination thereof, during the certification period. Credits declared for banking from the previous model year but not reported to EPA may also be used. However, if EPA finds that the reported credits can not be proven, they will be revoked and unavailable for use.

(ii) Banked credits may not be used for NO_X plus NMHC or particulate averaging and trading to offset emissions that exceed an FEL. Banked credits may not be used to remedy an in-use nonconformity determined by a Selective Enforcement Audit or by recall testing. However, banked credits may be used for subsequent production of the engine family if the manufacturer elects to recertify to a higher FEL.

(iii) NO_X credits banked under paragraph § 86.098–15(j) or § 86.000–15(k) may be used in place of NO_X plus NMHC credits in 2004 and later model years provided that they are used in the correct averaging set. NO_X credits banked under paragraph § 86.000–15(k) may also be used in place of NO_X plus NMHC credits in the 2003 model year for manufacturers selecting Option 1 contained in § 86.005–10(f)(1), provided that they are used in the correct averaging set.

(iv) Except for early credits banked under § 86.000–15(k), NO_X credits banked in accordance with § 86.000–15 may not be used to meet the Otto-cycle engine standards contained in § 86.005–10.

(g)(1) This paragraph (g) assumes NO_X plus NMHC, and particulate nonconformance penalties (NCPs) will be available for the 2004 and later model year HDEs.

(2) Engine families using NO_X plus NMHC and/or particulate NCPs but not involved in averaging:

(i) May not generate NO_X plus NMHC or particulate credits for banking and trading.

(ii) May not use NO_X plus NMHC or particulate credits from banking and trading.

(3) If a manufacturer has any engine family to which application of NCPs and banking and trading credits is desired, that family must be separated into two distinct families. One family, whose FEL equals the standard, must use NCPs only while the other, whose FEL does not equal the standard, must use credits only.

(4) If a manufacturer has any engine family in a given averaging set which is using NO_X plus NMHC and/or particulate NCPs, none of that manufacturer's engine families in that averaging set may generate credits for banking and trading.

(h) In the event of a negative credit balance in a trading situation, both the buyer and the seller would be liable.

(i) Certification fuel used for credit generation must be of a type that is both available in use and expected to be used by the engine purchaser. Therefore, upon request by the Administrator, the engine manufacturer must provide information acceptable to the Administrator that the designated fuel is readily available commercially and would be used in customer service.

(j) *Credit apportionment.* At the manufacturer's option, credits generated under the provisions described in this section may be sold to or otherwise provided to another party for use in programs other than the averaging, trading and banking program described in this section.

(1) The manufacturer shall pre-identify two emission levels per engine family for the purposes of credit apportionment. One emission level shall be the FEL and the other shall be the level of the standard that the engine family is required to certify to under § 86.005–10 or § 86.004–11. For each engine family, the manufacturer may report engine sales in two categories, ''ABT-only credits'' and ''nonmanufacturer-owned credits''.

(i) For engine sales reported as ''ABT-only credits'', the credits generated must be used solely in the ABT program described in this section.

(ii) The engine manufacturer may declare a portion of engine sales ''nonmanufacturer-owned credits'' and this portion of the credits generated between the standard and the FEL, based on the calculation in (c)(1) of this section, would belong to the engine purchaser. For ABT, the manufacturer may not generate any credits for the engine sales reported as ''nonmanufacturer-owned credits''. Engines reported as ''nonmanufacturer-owned credits'' shall comply with the FEL and the requirements of the ABT program in all other respects.

(2) Only manufacturer-owned credits reported as ''ABT-only credits'' shall be used in the averaging, trading, and banking provisions described in this section.

(3) Credits shall not be double-counted. Credits used in the ABT program may not be provided to an engine purchaser for use in another program.

(4) Manufacturers shall determine and state the number of engines sold as ''ABT-only credits'' and ''nonmanufacturer-owned credits'' in the end-of-model year reports required under § 86.001–23.

(k) *Additional flexibility for diesel-cycle engines.* If a diesel-cycle engine family meets the conditions of either paragraph (k)(1) or (2) of this section, a Discount of 1.0 may be used in the trading and banking calculation, for both NO_X plus NMHC and for particulate, described in paragraph (c)(1) of this section.

(1) The engine family certifies with a certification level of 1.9 g/bhp-hr NO_X plus NMHC or lower for all diesel-cycle engine families.

(2) All of the following must apply to the engine family:

(i) Diesel-cycle engines only;

(ii) 2004, 2005, and 2006 model years only;

(iii) Must be an engine family using carry-over certification data from prior to model year 2004 where the NO_X plus the HC certification level prior to model year 2004 is below the NO_X plus NMHC or NO_X plus NMHCE standard set forth in § 86.004–11. Under this option, the NO_X credits generated from this engine family prior to model year 2004 may be used as NO_X plus NMHC credits.

(l) *Additional flexibility for Otto-cycle engines.* If an Otto-cycle engine family meets the conditions of paragraph (l)(1)

or (2) of this section, a discount of 1.0 may be used in the trading and banking credits calculation for NO_X plus NMHC described in paragraph (c)(1) of this section, as follows:

(1) The engine family has a FEL of 0.5 g/bhp-hr NO_X plus NMHC or lower;

(2) All of the following conditions are met:

(i) For first three consecutive model years that the engine family is certified to a NO_X plus NMHC standard contained in § 86.005–10;

(ii) The engine family is certified using carry-over data from an engine family which was used to generate early NO_X credits per § 86.000–15(k) where the sum of the NO_X FEL plus the HC (or hydrocarbon equivalent where applicable) certification level is below 1.0 g/bhp-hr.

[62 FR 54722, Oct. 21, 1997, as amended at 65 FR 59946, Oct. 6, 2000]

§ 86.004–16 Prohibition of defeat devices.

(a) No new heavy-duty vehicle or heavy-duty engine shall be equipped with a defeat device.

(b) The Administrator may test or require testing on any vehicle or engine at a designated location, using driving cycles and conditions which may reasonably be expected to be encountered in normal operation and use, for the purpose of investigating a potential defeat device.

(c) [Reserved]

(d) For vehicle and engine designs designated by the Administrator to be investigated for possible defeat devices:

(1) *General*. The manufacturer must show to the satisfaction of the Administrator that the vehicle or engine design does not incorporate strategies that reduce emission control effectiveness exhibited during the applicable Federal emissions test procedures when the vehicle or engine is operated under conditions which may reasonably be expected to be encountered in normal operation and use, unless one of the specific exceptions set forth in the definition of ''defeat device'' in § 86.004–2 has been met.

(2) *Information submissions required*. The manufacturer will provide an explanation containing detailed information (including information which the Administrator may request to be submitted) regarding test programs, engineering evaluations, design specifications, calibrations, on-board computer algorithms, and design strategies incorporated for operation both during and outside of the applicable Federal emission test procedure.

[65 FR 59947, Oct. 6, 2000, as amended at 70 FR 40432, July 13, 2005]

§ 86.004–21 Application for certification.

Section 86.004–21 includes text that specifies requirements that differ from § 86.094–21 or § 86.096–21. Where a paragraph in § 86.094–21 or § 86.096–21 is identical and applicable to § 86.004–21, this may be indicated by specifying the corresponding paragraph and the statement ''[Reserved]. For guidance see § 86.094–21.'' or ''[Reserved]. For guidance see § 86.096–21.''.

(a)–(b)(3) [Reserved]. For guidance see § 86.094–21.

(b)(4)(i) For light-duty vehicles and light-duty trucks, a description of the test procedures to be used to establish the evaporative emission and/or refueling emission deterioration factors, as appropriate, required to be determined and supplied in § 86.001–23(b)(2).

(b)(4)(ii)–(b)(5)(iv) [Reserved]. For guidance see § 86.094–21.

(b)(5)(v) For light-duty vehicles and applicable light-duty trucks with non-integrated refueling emission control systems, the number of continuous UDDS cycles, determined from the fuel economy on the UDDS applicable to the test vehicle of that evaporative/ refueling emission family-emission control system combination, required to use a volume of fuel equal to 85% of fuel tank volume.

(6) *Participation in averaging programs*—(i) *Particulate averaging*. (A) If the manufacturer elects to participate in the particulate averaging program for diesel light-duty vehicles and/or diesel light-duty trucks or the particulate averaging program for heavy-duty diesel engines, the application must list the family particulate emission limit and the projected U.S. production volume of the family for the model year.

(B) The manufacturer shall choose the level of the family particulate

emission limits, accurate to hundredth of a gram per mile or hundredth of a gram per brake horsepowerhour for HDEs.

(C) The manufacturer may at any time during production elect to change the level of any family particulate emission limit(s) by submitting the new limit(s) to the Administrator and by demonstrating compliance with the limit(s) as described in §§ 86.090–2 and 86.094–28(b)(5)(i).

(ii) *NO_X and NO_X plus NMHC averaging.* (A) If the manufacturer elects to participate in the NO_X averaging program for light-duty trucks or otto-cycle HDEs or the NO_X plus NMHC averaging program for diesel-cycle HDEs, the application must list the family emission limit and the projected U.S. production volume of the family for the model year.

(B) The manufacturer shall choose the level of the family emission limits, accurate to one-tenth of a gram per mile or to one-tenth of a gram per brake horsepower-hour for HDEs.

(C) The manufacturer may at any time during production elect to change the level of any family emission limit(s) by submitting the new limits to the Administrator and by demonstrating compliance with the limit(s) as described in §§ 86.088–2 and 86.094–28(b)(5)(ii).

(b)(7) and (b)(8) [Reserved]. For guidance see § 86.094–21.

(b)(9) For each light-duty vehicle, light-duty truck, evaporative/refueling emission family or heavy-duty vehicle evaporative emission family, a description of any unique procedures required to perform evaporative and/or refueling emission tests, as applicable, (including canister working capacity, canister bed volume, and fuel temperature profile for the running loss test) for all vehicles in that evaporative and/or evaporative/refueling emission family, and a description of the method used to develop those unique procedures.

(10) For each light-duty vehicle or applicable light-duty truck evaporative/refueling emission family, or each heavy-duty vehicle evaporative emission family:

(i) Canister working capacity, according to the procedures specified in § 86.132–96(h)(1)(iv);

(ii) Canister bed volume; and

(iii) Fuel temperature profile for the running loss test, according to the procedures specified in § 86.129–94(d).

(c)–(j) [Reserved]. For guidance see § 86.094–21.

(k) and (l) [Reserved]. For guidance see § 86.096–21.

(m) For model years 2004 through 2007, within 180 days after submission of the application for certification of a heavy-duty diesel engine, the manufacturer must provide emission test results from the Load Response Test conducted according to § 86.1380–2004, including, at a minimum, test results conducted at each of the speeds identified in § 86.1380–2004. Load Response Test data submissions are not necessary for carry-over engine families for which Load Response Test data has been previously submitted. In addition, upon approval of the Administrator, manufacturers may carry Load Response Test data across from one engine family to other engine families, provided that the carry-across engine families use similar emission control technology hardware which would be expected to result in the generation of similar emission data when run over the Load Response Test.

(n) Upon request from EPA, a manufacturer must provide to EPA any hardware (including scan tools), passwords, and/or documentation necessary for EPA to read, interpret, and store (in engineering units if applicable) any information broadcast by an engine's on-board computers and electronic control modules which relates in any way to emission control devices and auxiliary emission control devices, provided that such hardware, passwords, or documentation exists and is not otherwise commercially available. Passwords include any information necessary to enable generic scan tools or personal computers access to proprietary emission related information broadcast by an engine's on-board computer, if such passwords exist. This requirement includes access by EPA to any proprietary code information which may be broadcast by an engine's on-board computer and electronic control modules. Information which is confidential business information must be marked as such. Engineering units refers to the

ability to read, interpret, and store information in commonly understood engineering units, for example, engine speed in revolutions per minute or per second, injection timing parameters such as start of injection in degree's before top-dead center, fueling rates in cubic centimeters per stroke, vehicle speed in miles per hour or kilometers per hour. This paragraph (n) does not restrict EPA authority to take any action authorized by section 208 of the Clean Air Act.

[62 FR 54724, Oct. 21, 1997, as amended at 65 FR 59947, Oct. 6, 2000]

§ 86.004–25 Maintenance.

Section 86.004–25 includes text that specifies requirements that differ from § 86.094–25 or § 86.098–25. Where a paragraph in § 86.094–25 or § 86.098–25 is identical and applicable to § 86.004–25, this may be indicated by specifying the corresponding paragraph and the statement ''[Reserved]. For guidance see § 86.094–25.'' or ''[Reserved]. For guidance see § 86.098–25.''.

(a)(1) Applicability. This section applies to light-duty vehicles, light-duty trucks, and HDEs.

(2) Maintenance performed on vehicles, engines, subsystems, or components used to determine exhaust, evaporative or refueling emission deterioration factors, as appropriate, is classified as either emission-related or non-emission-related and each of these can be classified as either scheduled or unscheduled. Further, some emission-related maintenance is also classified as critical emission-related maintenance.

(b) Introductory text through (b)(3)(ii) [Reserved]. For guidance see § 86.094–25.

(b)(3)(iii) For otto-cycle heavy-duty engines, the adjustment, cleaning, repair, or replacement of the items listed in paragraphs (b)(3)(iii) (A)–(E) of this section shall occur at 50,000 miles (or 1,500 hours) of use and at 50,000-mile (or 1,500-hour) intervals thereafter.

(A) Positive crankcase ventilation valve.

(B) Emission-related hoses and tubes.

(C) Ignition wires.

(D) Idle mixture.

(E) Exhaust gas recirculation system related filters and coolers.

(iv) For otto-cycle light-duty vehicles, light-duty trucks and otto-cycle heavy-duty engines, the adjustment, cleaning, repair, or replacement of the oxygen sensor shall occur at 80,000 miles (or 2,400 hours) of use and at 80,000-mile (or 2,400-hour) intervals thereafter.

(v) For otto-cycle heavy-duty engines, the adjustment, cleaning, repair, or replacement of the items listed in paragraphs (b)(3)(v) (A)–(H) of this section shall occur at 100,000 miles (or 3,000 hours) of use and at 100,000-mile (or 3,000-hour) intervals thereafter.

(A) Catalytic converter.

(B) Air injection system components.

(C) Fuel injectors.

(D) Electronic engine control unit and its associated sensors (except oxygen sensor) and actuators.

(E) Evaporative emission canister.

(F) Turbochargers.

(G) Carburetors.

(H) Exhaust gas recirculation system (including all related control valves and tubing) except as otherwise provided in paragraph (b)(3)(iii)(E) of this section.

(b)(3)(vi)(A)–(b)(3)(vi)(D) [Reserved]. For guidance see § 86.094–25.

(b)(3)(vi)(E)–(b)(3)(vi)(J) [Reserved]. For guidance see § 86.098–25.

(4) For diesel-cycle light-duty vehicles, light-duty trucks, and HDEs, emission-related maintenance in addition to or at shorter intervals than that listed in paragraphs (b)(4) (i)–(iv) of this section will not be accepted as technologically necessary, except as provided in paragraph (b)(7) of this section.

(i) For diesel-cycle heavy-duty engines, the adjustment, cleaning, repair, or replacement of the items listed in paragraphs (b)(4)(i) (A)–(C) of this section shall occur at 50,000 miles (or 1,500 hours) of use and at 50,000-mile (or 1,500-hour) intervals thereafter.

(A) Exhaust gas recirculation system related filters and coolers.

(B) Positive crankcase ventilation valve.

(C) Fuel injector tips (cleaning only).

(ii) For diesel-cycle light-duty vehicles and light-duty trucks, the adjustment, cleaning, repair, or replacement of the positive crankcase ventilation

valve shall occur at 50,000 miles of use and at 50,000-mile intervals thereafter.

(iii) The adjustment, cleaning, repair, or replacement of items listed in paragraphs (b)(4)(iii) (A)–(G) of this section shall occur at 100,000 miles (or 3,000 hours) of use and at 100,000-mile (or 3,000-hour) intervals thereafter for light heavy-duty diesel engines, or, at 150,000 miles (or 4,500 hours) intervals thereafter for medium and heavy heavy-duty diesel engines.

(A) Fuel injectors.

(B) Turbocharger.

(C) Electronic engine control unit and its associated sensors and actuators.

(D) Particulate trap or trap-oxidizer system (including related components).

(E) Exhaust gas recirculation system (including all related control valves and tubing) except as otherwise provided in paragraph (b)(4)(i)(A) of this section.

(F) Catalytic converter.

(G) Any other add-on emissions-related component (i.e., a component whose sole or primary purpose is to reduce emissions or whose failure will significantly degrade emissions control and whose function is not integral to the design and performance of the engine.)

(iv) For disel-cycle light-duty vehicles and light-duty trucks, the adjustment, cleaning, repair, or replacement shall occur at 100,000 miles of use and at 100,000-mile intervals thereafter of the items listed in paragraphs (b)(4)(iv) (A)–(G) of this section.

(A) Fuel injectors.

(B) Turbocharger.

(C) Electronic engine control unit and its associated sensors and actuators.

(D) Particulate trap or trap-oxidizer system (including related components).

(E) Exhaust gas recirculation system including all related filters and control valves.

(F) Catalytic converter.

(G) Superchargers.

(5) [Reserved]

(6)(i) The components listed in paragraphs (b)(6)(i) (A)–(H) of this section are currently defined as critical emission-related components.

(A) Catalytic converter.

(B) Air injection system components.

(C) Electronic engine control unit and its associated sensors (including oxygen sensor if installed) and actuators.

(D) Exhaust gas recirculation system (including all related filters, coolers, control valves, and tubing).

(E) Positive crankcase ventilation valve.

(F) Evaporative and refueling emission control system components (excluding canister air filter).

(G) Particulate trap or trap-oxidizer system.

(H) Any other add-on emissions-related component (i.e., a component whose sole or primary purpose is to reduce emissions or whose failure will significantly degrade emissions control and whose function is not integral to the design and performance of the engine.)

(ii) All critical emission-related scheduled maintenance must have a reasonable likelihood of being performed in-use. The manufacturer shall be required to show the reasonable likelihood of such maintenance being performed in-use, and such showing shall be made prior to the performance of the maintenance on the durability data vehicle. Critical emission-related scheduled maintenance items which satisfy one of the conditions defined in paragraphs (b)(6)(ii) (A)–(F) of this section will be accepted as having a reasonable likelihood of the maintenance item being performed in-use.

(A) Data are presented which establish for the Administrator a connection between emissions and vehicle performance such that as emissions increase due to lack of maintenance, vehicle performance will simultaneously deteriorate to a point unacceptable for typical driving.

(B) Survey data are submitted which adequately demonstrate to the Administrator that, at an 80 percent confidence level, 80 percent of such engines already have this critical maintenance item performed in-use at the recommended interval(s).

(C) A clearly displayed visible signal system approved by the Administrator is installed to alert the vehicle driver that maintenance is due. A signal bearing the message ''maintenance needed''

or ''check engine'', or a similar message approved by the Administrator, shall be actuated at the appropriate mileage point or by component failure. This signal must be continuous while the engine is in operation and not be easily eliminated without performance of the required maintenance. Resetting the signal shall be a required step in the maintenance operation. The method for resetting the signal system shall be approved by the Administrator. For HDEs, the system must not be designed to deactivate upon the end of the useful life of the engine or thereafter.

(D) A manufacturer may desire to demonstrate through a survey that a critical maintenance item is likely to be performed without a visible signal on a maintenance item for which there is no prior in-use experience without the signal. To that end, the manufacturer may in a given model year market up to 200 randomly selected vehicles per critical emission-related maintenance item without such visible signals, and monitor the performance of the critical maintenance item by the owners to show compliance with paragraph (b)(6)(ii)(B) of this section. This option is restricted to two consecutive model years and may not be repeated until any previous survey has been completed. If the critical maintenance involves more than one engine family, the sample will be sales weighted to ensure that it is representative of all the families in question.

(E) The manufacturer provides the maintenance free of charge, and clearly informs the customer that the maintenance is free in the instructions provided under § 86.087–38.

(F) Any other method which the Administrator approves as establishing a reasonable likelihood that the critical maintenance will be performed in-use.

(iii) Visible signal systems used under paragraph (b)(6)(ii)(C) of this section are considered an element of design of the emission control system. Therefore, disabling, resetting, or otherwise rendering such signals inoperative without also performing the indicated maintenance procedure is a prohibited act under section 203(a)(3) of the Clean Air Act (42 U.S.C. 7522(a)(3)).

(b)(7)–(h) [Reserved]. For guidance see § 86.094–25.

[62 FR 54725, Oct. 21, 1997]

§ 86.004–26 Mileage and service accumulation; emission measurements.

Section 86.004–26 includes text that specifies requirements that differ from § 86.094–26, § 86.095–26, § 86.096–26, § 86.098–26, § 86.000–26, or § 86.001–26. Where a paragraph in § 86.094–26, § 86.095–26, § 86.096–26, § 86.098–26, § 86.000–26 or § 86.001–26 is identical and applicable to § 86.004–26, this may be indicated by specifying the corresponding paragraph and the statement ''[Reserved]. For guidance see § 86.094–26.'' or [Reserved]. For guidance see § 86.095–26.'' or ''[Reserved]. For guidance see § 86.096–26.'' or ''[Reserved]. For guidance see § 86.098–26.'' or ''[Reserved]. For guidance see § 86.000–26.'' or ''[Reserved]. For guidance see § 86.001–26.''.

(a)(1) [Reserved]. For guidance see § 86.094–26.

(a)(2)–(a)(3)(i)(A) [Reserved]. For guidance see § 86.000–26.

(a)(3)(i)(B) [Reserved]. For guidance see § 86.094–26.

(a)(3)(i)(C) [Reserved]. For guidance see § 86.098–26.

(a)(3)(i)(D)–(a)(3)(ii)(B) [Reserved]. For guidance see § 86.094–26.

(a)(3)(ii)(C) [Reserved]. For guidance see § 86.098–26.

(a)(3)(ii)(D)–(a)(4)(i)(B)(*4*) [Reserved]. For guidance see § 86.094–26.

(a)(4)(i)(C) [Reserved]. For guidance see § 86.000–26.

(a)(4)(i)(D)–(a)(6)(ii) [Reserved]. For guidance see § 86.094–26.

(a)(6)(iii) [Reserved]. For guidance see § 86.000–26.

(a)(7)–(a)(9)(i) [Reserved]. For guidance see § 86.094–26.

(a)(9)(ii) [Reserved]. For guidance see § 86.000–26.

(a)(9)(iii)–(b)(2) introductory text [Reserved]. For guidance see § 86.094–26.

(b)(2)(i)–(b)(2)(ii) [Reserved]. For guidance see § 86.000–26.

(b)(2)(iii) [Reserved]. For guidance see § 86.094–26.

(b)(2)(iv) [Reserved]. For guidance see § 86.001–26.

(b)(3)–(b)(4)(i)(B) [Reserved]. For guidance see § 86.094–26.

(b)(4)(i)(C) [Reserved]. For guidance see § 86.001–26.

(b)(4)(i)(D)–(b)(4)(ii)(B) [Reserved]. For guidance see § 86.095–26.

(b)(4)(ii)(C) [Reserved]. For guidance see § 86.001–26.

(b)(4)(ii)(D) [Reserved]. For guidance see § 86.095–26.

(b)(4)(iii) [Reserved]

(b)(4)(iv) [Reserved]. For guidance see § 86.094–26.

(c)(1) Paragraph (c) of this section applies to heavy-duty engines.

(2) Two types of service accumulation are applicable to heavy-duty engines, as described in paragraphs (c)(2)(i) and (ii) of this section. For Otto-cycle heavy-duty engines exhaust emissions, the service accumulation method used by a manufacturer must be designed to effectively predict the deterioration of emissions in actual use over the full useful life of the of the candidate in-use vehicles and must cover the breadth of the manufacturer's product line that will be covered by the durability procedure. Manufacturers not selecting Options 1 or 2 described in § 86.005–10(f) may certify Otto-cycle engines using the provisions contained in § 86.094–26(c)(2) rather than those contained in this paragraph (c)(2) for 2004 model year engine families certified using carry-over durability data, except for those engines used for early credit banking as allowed in § 86.000–15(k).

(i) Service accumulation on engines, subsystems, or components selected by the manufacturer under § 86.094–24(c)(3)(i). The manufacturer determines the form and extent of this service accumulation, consistent with good engineering practice, and describes it in the application for certification.

(ii) Dynamometer service accumulation on emission data engines selected under § 86.094–24(b)(2) or (3). The manufacturer determines the engine operating schedule to be used for dynamometer service accumulation, consistent with good engineering practice. A single engine operating schedule shall be used for all engines in an engine family-control system combination. Operating schedules may be different for different combinations.

(3) Exhaust emission deterioration factors will be determined on the basis of the service accumulation described in § 86.000–26(b)(2)(i) and related testing, according to the manufacturer's procedures.

(4) The manufacturer shall determine, for each engine family, the number of hours at which the engine system combination is stabilized for emission-data testing. The manufacturer shall maintain, and provide to the Administrator if requested, a record of the rationale used in making this determination. The manufacturer may elect to accumulate 125 hours on each test engine within an engine family without making a determination. Any engine used to represent emission-data engine selections under § 86.094–24(b)(2) shall be equipped with an engine system combination that has accumulated at least the number of hours determined under this paragraph. Complete exhaust emission tests shall be conducted for each emission-data engine selection under § 86.094–24(b)(2). Evaporative emission controls must be connected, as described in 40 CFR part 1065, subpart F. The Administrator may determine under § 86.094–24(f) that no testing is required.

(d)(1)–(d)(2)(i) [Reserved]. For guidance see § 86.094–26.

(d)(2)(ii) [Reserved]. For guidance see § 86.000–26.

(d)(3) [Reserved]. For guidance see § 86.094–26.

(d)(4) and (5) [Reserved].

(d)(6) [Reserved]. For guidance see § 86.094–26.

[65 FR 59947, Oct. 6, 2000, as amended at 70 FR 40432, July 13, 2005]

§ 86.004–28 Compliance with emission standards.

Section 86.004–28 includes text that specifies requirements that differ from § 86.094–28, § 86.098–28, § 86.000–28 or § 86.001–28. Where a paragraph in § 86.094–28, § 86.098–28, § 86.000–28 or § 86.001–28 is identical and applicable to § 86.004–28, this may be indicated by specifying the corresponding paragraph and the statement ''[Reserved]. For guidance see § 86.094–28.'' or ''[Reserved]. For guidance see § 86.098–28.'' or ''[Reserved]. For guidance see § 86.000–28.'' or ''[Reserved]. For guidance see § 86.001–28.''

(a)(1)–(a)(2) [Reserved. For guidance see § 86.000–28.

(a)(3) [Reserved]. For guidance see § 86.094–28.

(a)(4) introductory text [Reserved]. For guidance see § 86.098–28.

(a)(4)(i) [Reserved]. For guidance see § 86.000–28.

(a)(4)(i)(A)–(a)(4)(i)(B)(*2*)(*i*) [Reserved. For guidance see § 86.094–28.

(a)(4)(i)(B)(*2*)(*ii*) [Reserved]. For guidance see § 86.000–28.

(a)(4)(i)(B)(*2*)(*iii*)–(a)(4)(i)(B)(*2*)(*iv*) [Reserved]. For guidance see § 86.094–28.

(a)(4)(i)(C)–(a)(4)(i)(D)(*2*) [Reserved]. For guidance see § 86.098–28.

(a)(4)(ii)(A)(*1*)–(a)(4)(ii)(A)(*2*) [Reserved]. For guidance see § 86.000–28.

(a)(4)(ii)(B)–(a)(4)(ii)(C) [Reserved]. For guidance see § 86.098–28.

(a)(4)(iii) [Reserved]. For guidance see § 86.000–28.

(a)(4)(iv) [Reserved]. For guidance see § 86.094–28.

(a)(4)(v) [Reserved]. For guidance see § 86.098–28.

(a)(5)–(a)(6) [Reserved]. For guidance see § 86.094–28.

(a)(7) introductory text [Reserved]. For guidance see § 86.098–28.

(a)(7)(i) [Reserved]. For guidance see § 86.000–28.

(a)(7)(ii) [Reserved]. For guidance see § 86.094–28.

(b)(1) This paragraph (b) applies to light-duty trucks.

(2) Each exhaust, evaporative and refueling emission standard (and family emission limits, as appropriate) of § 86.004–9 applies to the emissions of vehicles for the appropriate useful life as defined in §§ 86.098–2 and 86.004–9.

(b)(3)–(b)(4)(i) [Reserved]. For guidance see § 86.094–28.

(b)(4)(ii)–(b)(6) [Reserved]. For guidance see § 86.000–28.

(b)(7)(i)–(b)(9) [Reserved]. For guidance see § 86.001–28.

(c)(1) Paragraph (c) of this section applies to heavy-duty engines.

(2) The applicable exhaust emission standards (or family emission limits, as appropriate) for Otto-cycle engines and for diesel-cycle engines apply to the emissions of engines for their useful life.

(3) Since emission control efficiency generally decreases with the accumulation of service on the engine, deterioration factors will be used in combination with emission data engine test results as the basis for determining compliance with the standards.

(4)(i) Paragraph (c)(4) of this section describes the procedure for determining compliance of an engine with emission standards (or family emission limits, as appropriate), based on deterioration factors supplied by the manufacturer. Deterioration factors shall be established using applicable emissions test procedures. NO_X plus NMHC deterioration factors shall be established based on the sum of the pollutants. When establishing deterioration factors for NO_X plus NMHC, a negative deterioration (emissions decrease from the official exhaust emissions test result) for one pollutant may not offset deterioration of the other pollutant. Where negative deterioration occurs for NO_X and/or NMHC, the official exhaust emission test result shall be used for purposes of determining the NO_X plus NMHC deterioration factor.

(ii) Separate exhaust emission deterioration factors, determined from tests of engines, subsystems, or components conducted by the manufacturer, shall be supplied for each engine-system combination. For Otto-cycle engines, separate factors shall be established for transient NMHC (NMHCE), CO, NO_X. NO_X plus NMHC, and idle CO, for those engines utilizing aftertreatment technology (e.g., catalytic converters). For diesel-cycle engines, separate factors shall be established for transient NMHC (NMHCE), CO, NO_X. NO_X plus NMHC and exhaust particulate. For diesel-cycle smoke testing, separate factors shall also be established for the acceleration mode (designated as ''A''), the lugging mode (designated as ''B''), and peak opacity (designated as ''C'').

(iii)(A) Paragraphs (c)(4)(iii)(A) (*1*) and (*2*) of this section apply to Otto-cycle HDEs.

(*1*) Otto-cycle HDEs not utilizing aftertreatment technology (e.g., catalytic converters). For transient NMHC (NMHCE), CO, NO_X. the official exhaust emission results for each emission data engine at the selected test point shall be adjusted by the addition of the appropriate deterioration factor. However, if the deterioration factor supplied by the manufacturer is less than

zero, it shall be zero for the purposes of this paragraph.

(*2*) Otto-cycle HDEs utilizing aftertreatment technology (*e.g.*, catalytic converters). For transient NMHC (NMHCE), CO, NO_X. and for idle CO, the official exhaust emission results for each emission data engine at the selected test point shall be adjusted by multiplication by the appropriate deterioration factor, except as otherwise provided in paragraph (c)(4)(iii)(A)(*3*) of this section. The deterioration factor must be calculated by dividing the exhaust emissions at full useful life by the stabilized mileage emission level (reference § 86.096–26(c)(4), *e.g.*, 125 hours). However, if the deterioration factor supplied by the manufacturer is less than one, it shall be one for purposes of this paragraph (c)(4)(iii)(A)(*2*).

(*3*) An Otto-cycle heavy-duty engine manufacturer who believes that a deterioration factor derived using the calculation methodology described in paragraph (c)(4)(iii)(4)(A)(*2*) of this section are significantly unrepresentative for one or more engine families (either too high or too low) may petition the Administrator to allow for the use of an additive rather than a multiplicative deterioration factor. This petition must include full rationale behind the request together with any supporting data or other evidence. Based on this or other information the Administration may allow for an alternative procedure. Any petition should be submitted in a timely manner, to allow adequate time for a thorough evaluation. Manufacturers using an additive deterioration factor under this paragraph (c)(4)(iii)(A)(*3*) must perform in-use verification testing to determine if the additive deterioration factor reasonably predicts actual in-use emissions. The plan for the in-use verification testing must be approved by the Administrator as part of the approval process described in this paragraph (c)(4)(iii)(4)(A)(*3*) prior to the use of the additive deterioration factor. The Administrator may consider the results of the in-use verification testing both in certification and in-use compliance programs.

(B) Paragraph (c)(4)(iii)(B) of this section applies to diesel-cycle HDEs.

(*1*) Diesel-cycle HDEs not utilizing aftertreatment technology (e.g., particulate traps). For transient NMHC (NMHCE), CO, NO_X. NO_X plus NMHC, and exhaust particulate, the official exhaust emission results for each emission data engine at the selected test point shall be adjusted by the addition of the appropriate deterioration factor. However, if the deterioration factor supplied by the manufacturer is less than zero, it shall be zero for the purposes of this paragraph.

(*2*) Diesel-cycle HDEs utilizing aftertreatment technology (e.g., particulate traps). For transient NMHC (NMHCE), CO, NO_X. NO_X plus NMHC, and exhaust particulate, the official exhaust emission results for each emission data engine at the selected test point shall be adjusted by multiplication by the appropriate deterioration factor. However, if the deterioration factor supplied by the manufacturer is less than one, it shall be one for the purposes of this paragraph.

(*3*) Diesel-cycle HDEs only. For acceleration smoke (''A''), lugging smoke (''B''), and peak smoke (''C''), the official exhaust emission results for each emission data engine at the selected test point shall be adjusted by the addition of the appropriate deterioration factor. However, if the deterioration factor supplied by the manufacturer is less than zero, it shall be zero for the purposes of this paragraph.

(iv) The emission values to compare with the standards (or family emission limits, as appropriate) shall be the adjusted emission values of paragraph (c)(4)(iii) of this section, rounded to the same number of significant figures as contained in the applicable standard in accordance with ASTM E 29–93a (as referenced in § 86.094–28 (a)(4)(i)(B)(2)(ii)), for each emission data engine.

(*5*) and (*6*) [Reserved]

(*7*) Every test engine of an engine family must comply with all applicable standards (or family emission limits, as appropriate), as determined in paragraph (c)(4)(iv) of this section, before any engine in that family will be certified.

(*8*) For the purposes of setting an NMHC plus NO_X certification level or FEL for a diesel-fueled engine family, the manufacturer may use one of the

following options for the determination of NMHC for an engine family. The manufacturer must declare which option is used in its application for certification of that engine family.

(i) THC may be used in lieu of NMHC for the standards set forth in § 86.004–11.

(ii) The manufacturer may choose its own method to analyze methane with prior approval of the Administrator.

(iii) The manufacturer may assume that two percent of the measured THC is methane (NMHC $=0.98 \times$ THC).

(d)(1) Paragraph (d) of this section applies to heavy-duty vehicles equipped with gasoline-fueled or methanol-fueled engines.

(2) The applicable evaporative emission standards in this subpart apply to the emissions of vehicles for their useful life.

(3)(i) For vehicles with a GVWR of up to 26,000 pounds, because it is expected that emission control efficiency will change during the useful life of the vehicle, an evaporative emission deterioration factor shall be determined from the testing described in § 86.098–23(b)(3) for each evaporative emission family-evaporative emission control system combination to indicate the evaporative emission control system deterioration during the useful life of the vehicle (minimum 50,000 miles). The factor shall be established to a minimum of two places to the right of the decimal.

(ii) For vehicles with a GVWR of greater than 26,000 pounds, because it is expected that emission control efficiency will change during the useful life of the vehicle, each manufacturer's statement as required in § 86.098–23(b)(4)(ii) shall include, in accordance with good engineering practice, consideration of control system deterioration.

(4) The evaporative emission test results, if any, shall be adjusted by the addition of the appropriate deterioration factor, provided that if the deterioration factor as computed in paragraph (d)(3) of this section is less than zero, that deterioration factor shall be zero for the purposes of this paragraph.

(5) The emission level to compare with the standard shall be the adjusted emission level of paragraph (d)(4) of this section. Before any emission value is compared with the standard, it shall be rounded, in accordance with ASTM E 29–93a (as referenced in § 86.094–28 (a)(4)(i)(B)(2)(ii)), to two significant figures. The rounded emission values may not exceed the standard.

(6) Every test vehicle of an evaporative emission family must comply with the evaporative emission standard, as determined in paragraph (d)(5) of this section, before any vehicle in that family may be certified.

(e) [Reserved]

(f)–(g)(3) [Reserved]. For guidance see § 86.001–28.

(g)(4) Vehicles certified to the refueling emission standard under this provision shall not be counted in the sales percentage compliance determinations for the 2004, 2005 and subsequent model years.

(h) [Reserved]. For guidance see § 86.001–28.

(i) Emission results from heavy-duty engines equipped with exhaust aftertreatment may need to be adjusted to account for regeneration events. This provision only applies for engines equipped with emission controls that are regenerated on an infrequent basis. For the purpose of this paragraph (i), the term ''regeneration'' means an event during which emissions levels change while the aftertreatment performance is being restored by design. Examples of regenerations are increasing exhaust gas temperature to remove sulfur from an adsorber or increasing exhaust gas temperature to oxidize PM in a trap. For the purpose of this paragraph (i), the term ''infrequent'' means having an expected frequency of less than once per transient test cycle. Calculation and use of adjustment factors are described in paragraphs (i)(1)–(i)(5) of this section.

(1) *Development of adjustment factors.* Manufacturers must develop separate pairs of adjustment factors (an upward adjustment factor and a downward adjustment factor) for each pollutant based on measured emission data and observed regeneration frequency. Adjustment factors may be carried-over to subsequent model years or carried-across to other engine families only where the Administrator determines that such carry-over or carry-across is

consistent with good engineering judgment. Adjustment factors should generally apply to an entire engine family, but manufacturers may develop separate adjustment factors for different engine configurations within an engine family. All adjustment factors for regeneration are additive.

(2) *Calculation of adjustment factors.* The adjustment factors are calculated from the following parameters: the measured emissions from a test in which the regeneration occurs (EF_H), the measured emissions from a test in which the regeneration does not occur (EF_L), and the frequency of the regeneration event in terms of fraction of tests during which the regeneration occurs (F). The average emission rate (EF_A) is calculated as:

$$EF_A = (F)(EF_H) + (1 - F)(EF_L)$$

(i) The upward adjustment factor (UAF) is calculated as: $UAF = EF_A - EF_L$.

(ii) The downward adjustment factor (DAF) is calculated as: $DAF = EF_A - EF_H$.

(3) *Use of adjustment factors.* Upward adjustment factors are added to measured emission rates for all tests in which the regeneration does not occur. Downward adjustment factors are added to measured emission rates for all tests in which the regeneration occurs. The occurrence of the regeneration must be identified in a manner that is readily apparent during all testing. Where no regeneration is identified, the upward adjustment factor shall be applied.

(4) *Sample calculation.* If EF_L is 0.10 g/bhp-hr, EF_H is 0.50 g/bhp-hr, and F is 0.1 (*i.e.,* the regeneration occurs once for each ten tests), then:

$$EF_A = (0.1)(0.5 \text{ g/bhp-hr}) + (1.0 - 0.1)(0.1 \text{ g/bhp-hr}) = 0.14 \text{ g/bhp-hr}$$

$$UAF = 0.14 \text{ g/bhp-hr} - 0.10 \text{ g/bhp-hr} = 0.04 \text{ g/bhp-hr}$$

$$DAF = 0.14 \text{ g/bhp-hr} - 0.50 \text{ g/bhp-hr} = -0.36 \text{ g/bhp-hr}$$

(5) *Options.* (i) A manufacturer may elect to omit adjustment factors for one or more of its engine families (or configurations) because the effect of the regeneration is small, or because it is not practical to identify when regenerations occur. In these cases, no upward or downward adjustment factor shall be added, and the manufacturer is liable for compliance with the emission standards for all tests, without regard to whether a regeneration occurs.

(ii) Upon request by the manufacturer, the Administrator may account for regeneration events differently than is provided in this paragraph (i). However, this option only applies for events that occur extremely infrequently, and which cannot be practically addressed using the adjustment factors described in this paragraph (i).

[61 FR 54890, Oct. 22, 1996, as amended at 62 FR 54726, Oct. 21, 1997; 65 FR 59948, Oct. 6, 2000; 66 FR 5159, Jan. 18, 2001]

§ 86.004–30 Certification.

Section 86.004–30 includes text that specifies requirements that differ from §§ 86.094–30, 86.095–30, 86.096–30, 86.098–30 or 86.001–30. Where a paragraph in § 86.094–30, § 86.095–30, § 86.096–30, § 86.098–30 or § 86.001–30 is identical and applicable to § 86.004–30, this may be indicated by specifying the corresponding paragraph and the statement ''[Reserved]. For guidance see § 86.094–30.'' or ''[Reserved]. For guidance see § 86.095–30.'' or ''[Reserved]. For guidance see § 86.096–30.'' or ''[Reserved]. For guidance see § 86.098–30.'' or ''[Reserved]. For guidance see § 86.001–30.''.

(a)(1) and (a)(2) [Reserved]. For guidance see § 86.094–30.

(a)(3)(i) One such certificate will be issued for each engine family. For gasoline-fueled and methanol-fueled light-duty vehicles and light-duty trucks, and petroleum-fueled diesel cycle light-duty vehicles and light-duty trucks not certified under § 86.098–28(g), one such certificate will be issued for each engine family-evaporative/refueling emission family combination. Each certificate will certify compliance with no more than one set of in-use and certification standards (or family emission limits, as appropriate).

(ii) For gasoline-fueled and methanol fueled heavy-duty vehicles, one such certificate will be issued for each manufacturer and will certify compliance for those vehicles previously identified in that manufacturer's statement(s) of compliance as required in § 86.098–23(b)(4) (i) and (ii).

(iii) For diesel light-duty vehicles and light-duty trucks, or diesel HDEs, included in the applicable particulate averaging program, the manufacturer may at any time during production elect to change the level of any family particulate emission limit by demonstrating compliance with the new limit as described in § 86.094–28(a)(6), § 86.094–28(b)(5)(i), or § 86.004–28(c)(5)(i). New certificates issued under this paragraph will be applicable only for vehicles (or engines) produced subsequent to the date of issuance.

(iv) For light-duty trucks or HDEs included in the applicable NO_X averaging program, the manufacturer may at any time during production elect to change the level of any family NO_X emission limit by demonstrating compliance with the new limit as described in § 86.094–28(b)(5)(ii) or § 86.004–28(c)(5)(ii). New certificates issued under this paragraph will be applicable only for vehicles (or engines) produced subsequent to the day of issue.

(4)(i) For exempt light-duty vehicles and light-duty trucks under the provisions of § 86.094–8(j) or § 86.094–9(j), an adjustment or modification performed in accordance with instructions provided by the manufacturer for the altitude where the vehicle is principally used will not be considered a violation of section 203(a)(3) of the Clean Air Act (42 U.S.C. 7522(a)(3)).

(ii) A violation of section 203(a)(1) of the Clean Air Act (42 U.S.C. 7522(a)(1)) occurs when a manufacturer sells or delivers to an ultimate purchaser any light-duty vehicle or light-duty truck, subject to the regulations under the Act, under any of the conditions specified in paragraph (a)(4)(ii) of this section.

(A) When a light-duty vehicle or light-duty truck is exempted from meeting high-altitude requirements as provided in § 86.090–8(h) or § 86.094–9(h):

(*1*) At a designated high-altitude location, unless such manufacturer has reason to believe that such vehicle will not be sold to an ultimate purchaser for principal use at a designated high-altitude location; or

(*2*) At a location other than a designated high-altitude location, when such manufacturer has reason to believe that such motor vehicle will be sold to an ultimate purchaser for principal use at a designated high-altitude location.

(B) When a light-duty vehicle or light-duty truck is exempted from meeting low-altitude requirements as provided in § 86.094–8(i) or § 86.094–9(i):

(*1*) At a designated low-altitude location, unless such manufacturer has reason to believe that such vehicle will not be sold to an ultimate purchaser for principal use at a designated low-altitude location; or

(*2*) At a location other than a designated low-altitude location, when such manufacturer has reason to believe that such motor vehicle will be sold to an ultimate purchaser for principal use at a designated low-altitude location.

(a)(4)(iii) introductory text through (a)(4)(iii)(C) [Reserved]. For guidance see § 86.094–30.

(a)(4)(iv) introductory text [Reserved]. For guidance see § 86.095–30.

(a)(4)(iv)(A)–(a)(9) [Reserved]. For guidance see § 86.094–30.

(10)(i) For diesel-cycle light-duty vehicle and diesel-cycle light-duty truck families which are included in a particulate averaging program, the manufacturer's production-weighted average of the particulate emission limits of all engine families in a participating class or classes shall not exceed the applicable diesel-cycle particulate standard, or the composite particulate standard defined in § 86.090–2 as appropriate, at the end of the model year, as determined in accordance with this part. The certificate shall be void ab initio for those vehicles causing the production-weighted FEL to exceed the particulate standard.

(ii) For all heavy-duty diesel-cycle engines which are included in the particulate ABT programs under § 86.098–15 or superseding ABT sections as applicable, the provisions of paragraphs (a)(10)(ii) (A)–(C) of this section apply.

(A) All certificates issued are conditional upon the manufacturer complying with the provisions of § 86.098–15 or superseding ABT sections as applicable and the ABT related provisions of other applicable sections, both during and after the model year production.

(B) Failure to comply with all provisions of § 86.098–15 or superseding ABT

sections as applicable will be considered to be a failure to satisfy the conditions upon which the certificate was issued, and the certificate may be deemed void ab initio.

(C) The manufacturer shall bear the burden of establishing to the satisfaction of the Administrator that the conditions upon which the certificate was issued were satisfied or excused.

(11)(i) For light-duty truck families which are included in a NO_X averaging program, the manufacturer's production-weighted average of the NO_X emission limits of all such engine families shall not exceed the applicable NO_X emission standard, or the composite NO_X emission standard defined in § 86.088–2, as appropriate, at the end of the model year, as determined in accordance with this part. The certificate shall be void ab initio for those vehicles causing the production-weighted FEL to exceed the NO_X standard.

(ii) For all HDEs which are included in the NO_X plus NMHC ABT programs contained in § 86.098–15, or superseding ABT sections as applicable, the provisions of paragraphs (a)(11)(ii) (A)–(C) of this section apply.

(A) All certificates issued are conditional upon the manufacturer complying with the provisions of § 86.098–15 or superseding ABT sections as applicable and the ABT related provisions of other applicable sections, both during and after the model year production.

(B) Failure to comply with all provisions of § 86.098–15 or superseding ABT sections as applicable will be considered to be a failure to satisfy the conditions upon which the certificate was issued, and the certificate may be deemed void ab initio.

(C) The manufacturer shall bear the burden of establishing to the satisfaction of the Administrator that the conditions upon which the certificate was issued were satisfied or excused.

(a)(12) [Reserved]. For guidance see § 86.094–30.

(a)(13) [Reserved]. For guidance see § 86.095–30.

(a)(14) [Reserved]. For guidance see § 86.094–30.

(a) (15)–(18) [Reserved]. For guidance see § 86.096–30.

(a)(19) [Reserved]. For guidance see § 86.098–30.

(a)(20) [Reserved]. For guidance see § 86.001–30.

(a)(21) For all light-duty trucks certified to refueling emission standards under § 86.004–9, the provisions of paragraphs (a)(21) (i)–(iii) of this section apply.

(i) All certificates issued are conditional upon the manufacturer complying with all provisions of § 86.004–9 both during and after model year production.

(ii) Failure to meet the required implementation schedule sales percentages as specified in § 86.004–9 will be considered to be a failure to satisfy the conditions upon which the certificate(s) was issued and the individual vehicles sold in violation of the implementation schedule shall not be covered by the certificate.

(iii) The manufacturer shall bear the burden of establishing to the satisfaction of the Administrator that the conditions upon which the certificate was issued were satisfied.

(b)(1) introductory text through (b)(1)(ii)(A) [Reserved]. For guidance see § 86.094–30.

(b)(1)(ii)(B) The emission data vehicle(s) selected under § 86.001–24(b)(vii) (A) and (B) shall represent all vehicles of the same evaporative/refueling control system within the evaporative/refueling family.

(b)(1)(ii)(C) [Reserved]. For guidance see § 86.094–30.

(b)(1)(ii)(D) The emission-data vehicle(s) selected under § 86.098–24(b)(1)(viii) shall represent all vehicles of the same evaporative/refueling control system within the evaporative/refueling emission family, as applicable.

(b)(1)(iii) and (b)(1)(iv) [Reserved]. For guidance see § 86.094–30.

(b)(2) [Reserved]. For guidance see § 86.098–30.

(b)(3)–(b)(4)(i) [Reserved]. For guidance see § 86.094–30.

(b)(4)(ii) introductory text [Reserved]. For guidance see § 86.098–30.

(b)(4)(ii)(A) [Reserved]. For guidance see § 86.094–30.

(b)(4)(ii)(B)–(b)(4)(iv) [Reserved]. For guidance see § 86.098–30.

(b)(5)–(e) [Reserved]. For guidance see § 86.094–30.

(f) For engine families required to have an OBD system, certification will

not be granted if, for any test vehicle approved by the Administrator in consultation with the manufacturer, the malfunction indicator light does not illuminate under any of the following circumstances, unless the manufacturer can demonstrate that any identified OBD problems discovered during the Administrator's evaluation will be corrected on production vehicles.

(1)(i) *Otto-cycle.* A catalyst is replaced with a deteriorated or defective catalyst, or an electronic simulation of such, resulting in an increase of 1.5 times the NMHC+NO_X standard or FEL above the NMHC+NO_X emission level measured using a representative 4000 mile catalyst system.

(ii) *Diesel.* (A) If monitored for emissions performance—a catalyst is replaced with a deteriorated or defective catalyst, or an electronic simulation of such, resulting in exhaust emissions exceeding 1.5 times the applicable standard or FEL for NMHC+NO_X or PM.

(B) If monitored for performance—a particulate trap is replaced with a trap that has catastrophically failed, or an electronic simulation of such.

(2)(i) *Otto-cycle.* An engine misfire condition is induced resulting in exhaust emissions exceeding 1.5 times the applicable standards or FEL for NMHC+NO_X or CO.

(ii) *Diesel.* An engine misfire condition is induced and is not detected.

(3) If so equipped, any oxygen sensor is replaced with a deteriorated or defective oxygen sensor, or an electronic simulation of such, resulting in exhaust emissions exceeding 1.5 times the applicable standard or FEL for NMHC+NO_X or CO.

(4) If so equipped, a vapor leak is introduced in the evaporative and/or refueling system (excluding the tubing and connections between the purge valve and the intake manifold) greater than or equal in magnitude to a leak caused by a 0.040 inch diameter orifice, or the evaporative purge air flow is blocked or otherwise eliminated from the complete evaporative emission control system.

(5) A malfunction condition is induced in any emission-related engine system or component, including but not necessarily limited to, the exhaust gas recirculation (EGR) system, if equipped, the secondary air system, if equipped, and the fuel control system, singularly resulting in exhaust emissions exceeding 1.5 times the applicable emission standard or FEL for NMHC+NO_X. CO or PM.

(6) A malfunction condition is induced in an electronic emission-related engine system or component not otherwise described above that either provides input to or receives commands from the on-board computer resulting in a measurable impact on emissions.

[59 FR 16287, Apr. 6, 1994, as amended at 62 FR 54727, Oct. 21, 1997; 65 FR 59948, Oct. 6, 2000]

§ 86.004–38 Maintenance instructions.

This section includes text that specifies requirements that differ from those specified in § 86.096–38. Where a paragraph in § 86.096–38 is identical and applicable to § 86.004–38, this may be indicated by specifying the corresponding paragraph and the statement ''[Reserved]. For guidance *see* § 86.096–38.''.

(a) The manufacturer shall furnish or cause to be furnished to the purchaser of each new motor vehicle (or motor vehicle engine) subject to the standards prescribed in § 86.099–8, § 86.004–9, § 86.004–10, or § 86.004–11, as applicable, written instructions for the proper maintenance and use of the vehicle (or engine), by the purchaser consistent with the provisions of § 86.004–25, which establishes what scheduled maintenance the Administrator approves as being reasonable and necessary.

(1) The maintenance instructions required by this section shall be in clear, and to the extent practicable, nontechnical language.

(2) The maintenance instructions required by this section shall contain a general description of the documentation which the manufacturer will require from the ultimate purchaser or any subsequent purchaser as evidence of compliance with the instructions.

(b) Instructions provided to purchasers under paragraph (a) of this section shall specify the performance of all scheduled maintenance performed by the manufacturer on certification durability vehicles and, in cases where

the manufacturer performs less maintenance on certification durability vehicles than the allowed limit, may specify the performance of any scheduled maintenance allowed under § 86.004–25.

(c) Scheduled emission-related maintenance in addition to that performed under § 86.004–25(b) may only be recommended to offset the effects of abnormal in-use operating conditions, except as provided in paragraph (d) of this section. The manufacturer shall be required to demonstrate, subject to the approval of the Administrator, that such maintenance is reasonable and technologically necessary to assure the proper functioning of the emission control system. Such additional recommended maintenance shall be clearly differentiated, in a form approved by the Administrator, from that approved under § 86.004–25(b).

(d) Inspections of emission-related parts or systems with instructions to replace, repair, clean, or adjust the parts or systems if necessary, are not considered to be items of scheduled maintenance which insure the proper functioning of the emission control system. Such inspections, and any recommended maintenance beyond that approved by the Administrator as reasonable and necessary under paragraphs (a), (b), and (c) of this section, may be included in the written instructions furnished to vehicle owners under paragraph (a) of this section: Provided, That such instructions clearly state, in a form approved by the Administrator, that the owner need not perform such inspections or recommended maintenance in order to maintain the emissions defect and emissions performance warranty or manufacturer recall liability.

(e) The manufacturer may choose to include in such instructions an explanation of any distinction between the useful life specified on the label, and the emissions defect and emissions performance warranty period. The explanation must clearly state that the useful life period specified on the label represents the average period of use up to retirement or rebuild for the engine family represented by the engine used in the vehicle. An explanation of how the actual useful lives of engines used in various applications are expected to differ from the average useful life may be included. The explanation(s) shall be in clear, non-technical language that is understandable to the ultimate purchaser.

(f) If approved by the Administrator, the instructions provided to purchasers under paragraph (a) of this section shall indicate what adjustments or modifications, if any, are necessary to allow the vehicle to meet applicable emission standards at elevations above 4,000 feet, or at elevations of 4,000 feet or less.

(g) [Reserved]. For guidance see § 86.096–38. For incorporation by reference *see* §§ 86.1 and 86.096–38.

(h) The manufacturer shall furnish or cause to be furnished to the purchaser of each new motor engine subject to the standards prescribed in § 86.004–10 or § 86.004–11, as applicable, the following:

(1) Instructions for all maintenance needed after the end of the useful life of the engine for critical emissions-related components as provided in § 86.004–25(b), including recommended practices for diagnosis, cleaning, adjustment, repair, and replacement of the component (or a statement that such component is maintenance free for the life of the engine) and instructions for accessing and responding to any emissions-related diagnostic codes that may be stored in on-board monitoring systems;

(2) A copy of the engine rebuild provisions contained in § 86.004–40.

[62 FR 54728, Oct. 21, 1997, as amended at 68 FR 38455, June 27, 2003]

§ 86.004–40 Heavy-duty engine rebuilding practices.

The provisions of this section are applicable to heavy-duty engines subject to model year 2004 or later standards and are applicable to the process of engine rebuilding (or rebuilding a portion of an engine or engine system). The process of engine rebuilding generally includes disassembly, replacement of multiple parts due to wear, and reassembly, and also may include the removal of the engine from the vehicle and other acts associated with rebuilding an engine. Any deviation from the provisions contained in this section is

a prohibited act under section 203(a)(3) of the Clean Air Act (42 U.S.C. 7522(a)(3)).

(a) When rebuilding an engine, portions of an engine, or an engine system, there must be a reasonable technical basis for knowing that the resultant engine is equivalent, from an emissions standpoint, to a certified configuration (i.e., tolerances, calibrations, specifications) and the model year(s) of the resulting engine configuration must be identified. A reasonable basis would exist if:

(1) Parts installed, whether the parts are new, used, or rebuilt, are such that a person familiar with the design and function of motor vehicle engines would reasonably believe that the parts perform the same function with respect to emissions control as the original parts; and

(2) Any parameter adjustment or design element change is made only:

(i) In accordance with the original engine manufacturer's instructions; or

(ii) Where data or other reasonable technical basis exists that such parameter adjustment or design element change, when performed on the engine or similar engines, is not expected to adversely affect in-use emissions.

(b) When an engine is being rebuilt and remains installed or is reinstalled in the same vehicle, it must be rebuilt to a configuration of the same or later model year as the original engine. When an engine is being replaced, the replacement engine must be an engine of (or rebuilt to) a configuration of the same or later model year as the original engine.

(c) At time of rebuild, emissions-related codes or signals from on-board monitoring systems may not be erased or reset without diagnosing and responding appropriately to the diagnostic codes, regardless of whether the systems are installed to satisfy requirements in § 86.004–25 or for other reasons and regardless of form or interface. Diagnostic systems must be free of all such codes when the rebuilt engine is returned to service. Such signals may not be rendered inoperative during the rebuilding process.

(d) When conducting a rebuild without removing the engine from the vehicle, or during the installation of a rebuilt engine, all critical emissions-related components listed in § 86.004–25(b) not otherwise addressed by paragraphs (a) through (c) of this section must be checked and cleaned, adjusted, repaired, or replaced as necessary, following manufacturer recommended practices.

(e) Records shall be kept by parties conducting activities included in paragraphs (a) through (d) of this section. The records shall include at minimum the mileage and/or hours at time of rebuild, a listing of work performed on the engine and emissions-related control components including a listing of parts and components used, engine parameter adjustments, emissions-related codes or signals responded to and reset, and work performed under paragraph (d) of this section.

(1) Parties may keep records in whatever format or system they choose as long as the records are understandable to an EPA enforcement officer or can be otherwise provided to an EPA enforcement officer in an understandable format when requested.

(2) Parties are not required to keep records of information that is not reasonably available through normal business practices including information on activities not conducted by themselves or information that they cannot reasonably access.

(3) Parties may keep records of their rebuilding practices for an engine family rather than on each individual engine rebuilt in cases where those rebuild practices are followed routinely.

(4) Records must be kept for a minimum of two years after the engine is rebuilt.

[62 FR 54729, Oct. 21, 1997, as amended at 66 FR 5160, Jan. 18, 2001]

§ 86.005–1 General applicability.

Section 86.005–1 includes text that specifies requirements that differ from § 86.001–1. Where a paragraph in § 86.001–1 is identical and applicable to § 86.005–1, this may be indicated by specifying the corresponding paragraph and the statement ''[Reserved]. For guidance see § 86.001–1.''.

(a) *Applicability*. The provisions of this subpart generally apply to 2005 and later model year new Otto-cycle heavy-

duty engines used in incomplete vehicles and vehicles above 14,000 pounds GVWR and 2005 and later model year new diesel-cycle heavy-duty engines. In cases where a provision applies only to a certain vehicle group based on its model year, vehicle class, motor fuel, engine type, or other distinguishing characteristics, the limited applicability is cited in the appropriate section or paragraph. The provisions of this subpart continue to generally apply to 2000 and earlier model year new Otto-cycle and diesel-cycle light-duty vehicles, 2000 and earlier model year new Otto-cycle and diesel-cycle light-duty trucks, and 2004 and earlier model year new Otto-cycle complete heavy-duty vehicles at or below 14,000 pounds GVWR. Provisions generally applicable to 2001 and later model year new Otto-cycle and diesel-cycle light-duty vehicles, 2001 and later model year new Otto-cycle and diesel-cycle light-duty trucks, and 2005 and later model year Otto-cycle complete heavy-duty vehicles at or below 14,000 pounds GVWR are located in subpart S of this part.

(b) *Optional applicability*. (1) A manufacturer may request to certify any 2003 or 2004 model year heavy-duty vehicle of 14,000 pounds Gross Vehicle Weight Rating or less in accordance with the light-duty truck provisions located in subpart S of this part. Heavy-duty engine or vehicle provisions of this subpart A do not apply to such a vehicle. This option is not available in the 2003 model year for manufacturers choosing Otto-cycle HDE option 1 in paragraph (c)(1) of this section, or in the 2004 model year for manufacturers choosing Otto-cycle HDE option 2 in paragraph (c)(2) of this section.

(2) For 2005 and later model years, a manufacturer may request to certify any incomplete Otto-cycle heavy-duty vehicle of 14,000 pounds Gross Vehicle Weight Rating or less in accordance with the provisions for Otto-cycle complete heavy-duty vehicles located in subpart S of this part. Heavy-duty engine or heavy-duty vehicle provisions of this subpart A do not apply to such a vehicle. This option is available starting with the 2003 model year to manufacturers choosing Otto-cycle HDE option 1 in paragraph (c)(1) of this section. This option is available starting with the 2004 model year to manufacturers choosing Otto-cycle HDE option 2 in paragraph (c)(1) of this section.

(c) *Otto-cycle heavy-duty engines and vehicles*. The manufacturer must select one of the three options for Otto-cycle heavy-duty engines and vehicles in paragraphs (c)(1) through (c)(3) of this section. The emission standards and other requirements that apply under a given option shall apply to all Otto-cycle heavy-duty engines and vehicles certified by the manufacturer (*e.g.*, a manufacturer may not select one option for certain engine families and the other option for other engine families). The requirements under each option shall remain effective, once selected, for subsequent model years, until superceded or otherwise revised by the Administrator (*e.g.*, a manufacturer may not select one option prior to the 2004 model year and change to another option in the 2006 model year). The complete requirements under each option are contained in subparts A and S of this part.

(1) *Otto-cycle HDE Option 1*. The following requirements apply to Otto-cycle heavy-duty engines and vehicles certified by manufacturers selecting this option:

(i) Emission standards for 2003 and later model year Otto-cycle heavy-duty engines, according to the provisions of § 86.005–10(f)(1).

(ii) Emission standards for 2003 and later model year Otto-cycle complete heavy-duty vehicles, according to the provisions of § 86.1816–05, except that, for 2003 through 2006 model year Otto-cycle complete heavy-duty vehicles, manufacturers may optionally comply with the standards in either 86.005–10 or 86.1816–05.

(iii) Averaging, banking, and trading provisions that allow transfer of credits between a manufacturer's complete vehicle averaging set and their heavy-duty Otto-cycle engine averaging set, according to the provisions of § 86.1817–05(o).

(iv) On-board diagnostics requirements effective starting with the 2004 model year for Otto-cycle engines and complete vehicles, according to the provisions of §§ 86.005–17 and 86.1806–05.

(v) Refueling emissions requirements effective starting with the 2004 model year for Otto-cycle complete vehicles, according to the provisions of §§ 86.1810–01 and 86.1816–05.

(2) *Otto-cycle HDE Option 2*. The following requirements apply to Otto-cycle heavy-duty engines and vehicles certified by manufacturers selecting this option:

(i) Emission standards for 2004 and later model year Otto-cycle heavy-duty engines, according to the provisions of § 86.005–10(f)(2).

(ii) Emission standards for 2004 and later model year Otto-cycle complete heavy-duty vehicles, according to the provisions of § 86.1816–05.

(iii) Averaging, banking, and trading provisions that allow transfer of credits between a manufacturer's complete vehicle averaging set and their heavy-duty Otto-cycle engine averaging set, according to the provisions of § 86.1817–05(o).

(iv) On-board diagnostics requirements effective starting with the 2004 model year for Otto-cycle engines and complete vehicles, according to the provisions of §§ 86.005–17 and 86.1806–05.

(v) Refueling emissions requirements effective starting with the 2004 model year for Otto-cycle complete vehicles, according to the provisions of §§ 86.1810–01 and 86.1816–05.

(3) *Otto-cycle HDE Option 3*. The following requirements apply to Otto-cycle heavy-duty engines and vehicles certified by manufacturers that do not select one of the options for 2003 or 2004 model year compliance in paragraph (c)(1) or (c)(2) of this section:

(i) Emission standards for 2005 and later model year Otto-cycle heavy-duty engines, according to the provisions of § 86.005–10.

(ii) Emission standards for 2005 and later model year Otto-cycle complete heavy-duty vehicles, according to the provisions of § 86.1816–05.

(iii) On-board diagnostics requirements effective starting with the 2005 model year for Otto-cycle engines and complete vehicles, according to the provisions of §§ 86.005–17 and 86.1806–05.

(iv) Refueling emissions requirements effective starting with the 2005 model year for Otto-cycle complete vehicles, according to the provisions of §§ 86.1810–01 and 86.1816–05.

(v) Manufacturers selecting this option may exempt 2005 model year Otto-cycle heavy-duty engines and vehicles whose model year commences before July 31, 2004 from the requirements in paragraphs (c)(3)(i) through (iv) of this section.

(vi) For 2005 model year engines or vehicles exempted under paragraph (c)(3)(v) of this section, a manufacturer shall certify such Otto-cycle heavy-duty engines and vehicles to all requirements in this subpart applicable to 2004 model year Otto-cycle heavy-duty engines. The averaging, banking, and trading provisions contained in § 86.000–15 remain effective for these engines.

(d) [Reserved]

(e)–(f) [Reserved]. For guidance see § 86.001–1.

[65 FR 59949, Oct. 6, 2000]

§ 86.005–10 Emission standards for 2005 and later model year Otto-cycle heavy-duty engines and vehicles.

Section 86.005–10 includes text that specifies requirements that differ from § 86.098–10 or § 86.099–10. Where a paragraph in § 86.098–10 or § 86.099–10 is identical and applicable to § 86.005–10, this may be indicated by specifying the corresponding paragraph and the statement ''[Reserved]. For guidance see § 86.098–10.'' or ''[Reserved]. For guidance see § 86.099–10.''.

(a)(1) Exhaust emissions from new 2005 and later model year Otto-cycle HDEs, except for Otto-cycle HDEs subject to the alternative standards in paragraph (f) of this section, shall not exceed:

(i)(A) *Oxides of Nitrogen plus Non-methane Hydrocarbons (NO_X + NMHC) for engines fueled with either gasoline, natural gas, or liquefied petroleum gas.* 1.0 grams per brake horsepower-hour (0.37 grams per megajoule).

(B) *Oxides of Nitrogen plus Non-methane Hydrocarbon Equivalent (NO_X + NMHCE) for engines fueled with methanol.* 1.0 grams per brake horsepower-hour (0.37 grams per megajoule).

(C) A manufacturer may elect to include any or all of its Otto-cycle HDE families in any or all of the emissions

ABT programs for HDEs, within the restrictions described in § 86.098–15. If the manufacturer elects to include engine families in any of these programs, the NO_X plus NMHC (or NO_X plus NMHCE for methanol-fueled engines) FELs may not exceed 4.5 grams per brake horsepower-hour (1.7 grams per megajoule). This ceiling value applies whether credits for the family are derived from averaging, banking, or trading programs.

(ii)(A) *Carbon monoxide for engines intended for use in all vehicles, except as provided in paragraph (a)(3) of this section.* 14.4 grams per brake horsepower-hour (5.36 grams per megajoule), as measured under transient operating conditions.

(B) *Carbon monoxide for engines intended for use only in vehicles with a Gross Vehicle Weight Rating of greater than 14,000 pounds.* 37.1 grams per brake horsepower-hour (13.8 grams per megajoule), as measured under transient operating conditions.

(C) *Idle carbon monoxide.* For all Otto-cycle HDEs utilizing aftertreatment technology, and not certified to the on-board diagnostics requirements of § 86.005–17: 0.50 percent of exhaust gas flow at curb idle.

(2) The standards set forth in paragraphs (a)(1) and (f) of this section refer to the exhaust emitted over the operating schedule set forth in paragraph (f)(1) of appendix I to this part, and measured and calculated in accordance with the procedures set forth in subpart N or P of this part.

(3)(i) A manufacturer may certify one or more Otto-cycle HDE configurations intended for use in all vehicles to the emission standard set forth in paragraph (a)(1)(ii)(B) of this section: Provided, that the total model year sales of such configuration(s), segregated by fuel type, being certified to the emission standard in paragraph (a)(1)(ii)(B) of this section represent no more than five percent of total model year sales of each fuel type Otto-cycle HDE intended for use in vehicles with a Gross Vehicle Weight Rating of up to 14,000 pounds by the manufacturer.

(ii) The configurations certified to the emission standards of paragraph (a)(1)(ii)(B) of this section under the provisions of paragraph (a)(3)(i) of this section shall still be required to meet the evaporative emission standards set forth in § 86.099–10(b)(1)(i), (b)(2)(i) and (b)(3)(i).

(4) The manufacturer may exempt 2005 model year HDE engine families whose model year begins before July, 31, 2004 from the requirements in this paragraph (a). Exempted engine families shall be subject to the requirements in § 86.099–10.

(5) For certification purposes, where the applicable California evaporative emission standard is as stringent or more stringent than the applicable federal evaporative emission standard, the Administrator may accept California certification test data indicating compliance with the California standard to demonstrate compliance with the appropriate federal certification evaporative emission standard. The Administrator may require the manufacturer to provide comparative test data which clearly demonstrates that a vehicle meeting the California evaporative standard (when tested under California test conditions/test procedures) will also meet the appropriate federal evaporative emission standard when tested under federal test conditions/test procedures described in this Part 86.

(b) [Reserved]. For guidance see § 86.099–10.

(c) [Reserved]. For guidance see § 86.098–10.

(d) Every manufacturer of new motor vehicle engines subject to the standards prescribed in this section shall, prior to taking any of the actions specified in section 203(a)(1) of the Act, test or cause to be tested motor vehicle engines in accordance with applicable procedures in subpart N or P of this part to ascertain that such test engines meet the requirements of this section.

(e) [Reserved]. For guidance see § 86.099–10.

(f) *Alternative exhaust emission standards.* In lieu of the exhaust emission standards in paragraph (a)(1)(i)(A) or (B) of this section, the manufacturer may select the standards and provisions in either paragraph (f)(1) or (f)(2) of this section.

(1) *Otto-cycle HDE Option 1.* The alternative exhaust emission standards in this paragraph (f)(1) shall apply to new 2003 through 2007 model year Otto-cycle

HDEs and, at the manufacturers option, to new 2003 through 2006 model year Otto-cycle complete heavy-duty vehicles less than or equal to 14,000 pounds GVWR

(i) *Oxides of Nitrogen plus Non-methane Hydrocarbons (NO_X + NMHC) for engines fueled with either gasoline, natural gas, or liquefied petroleum gas.* 1.5 grams per brake horsepower-hour (0.55 grams per megajoule).

(ii) *Oxides of Nitrogen plus Non-methane Hydrocarbon Equivalent (NO_X + NMHCE) for engines fueled with methanol.* 1.5 grams per brake horsepower-hour (0.55 grams per megajoule).

(2) *Otto-cycle HDE Option 2.* The alternative exhaust emission standards in this paragraph (f)(2) shall apply to new 2004 through 2007 model year Otto-cycle HDEs.

(i) *Oxides of Nitrogen plus Non-methane Hydrocarbons ($NO,_X$ + NMHC) for engines fueled with either gasoline, natural gas, or liquefied petroleum gas.* 1.5 grams per brake horsepower-hour (0.55 grams per megajoule).

(ii) *Oxides of Nitrogen plus Non-methane Hydrocarbon Equivalent (NO_X + NMHCE) for engines fueled with methanol.* 1.5 grams per brake horsepower-hour (0.55 grams per megajoule).

[65 FR 59950, Oct. 6, 2000, as amended at 66 FR 5160, Jan. 18, 2001; 70 FR 72927, Dec. 8, 2005]

§ 86.005–17 On-board diagnostics.

(a) *General.* (1) All heavy-duty engines intended for use in a heavy-duty vehicle weighing 14,000 pounds GVWR or less must be equipped with an on-board diagnostic (OBD) system capable of monitoring all emission-related engine systems or components during the applicable useful life. Heavy-duty engines intended for use in a heavy-duty vehicle weighing 14,000 pounds GVWR or less must meet the OBD requirements of this section according to the phase-in schedule in paragraph (k) of this section. All monitored systems and components must be evaluated periodically, but no less frequently than once per applicable certification test cycle as defined in Appendix I, paragraph (f), of this part, or similar trip as approved by the Administrator.

(2) An OBD system demonstrated to fully meet the requirements in § 86.1806–05 may be used to meet the requirements of this section, provided that the Administrator finds that a manufacturer's decision to use the flexibility in this paragraph (a)(2) is based on good engineering judgement.

(b) *Malfunction descriptions.* The OBD system must detect and identify malfunctions in all monitored emission-related engine systems or components according to the following malfunction definitions as measured and calculated in accordance with test procedures set forth in subpart N of this part (engine-based test procedures) excluding the test procedure referred to as the ''Supplemental emission test; test cycle and procedures'' contained in § 86.1360, and excluding the test procedure referred to as the ''Not-To-Exceed Test Procedure'' contained in § 86.1370, and excluding the test procedure referred to as the ''Load Response Test'' contained in § 86.1380.

(1) *Catalysts and particulate traps.* (i) *Otto-cycle.* Catalyst deterioration or malfunction before it results in an increase in NMHC (or NO_X+NMHC, as applicable) emissions 1.5 times the NMHC (or NO_X+NMHC, as applicable) standard or FEL, as compared to the NMHC (or NO_X+NMHC, as applicable) emission level measured using a representative 4000 mile catalyst system.

(ii) *Diesel.* (A) If equipped, catalyst deterioration or malfunction before it results in exhaust emissions exceeding 1.5 times the applicable standard or FEL for NO_X (or NO_X+NMHC, as applicable) or PM. This requirement applies only to reduction catalysts; monitoring of oxidation catalysts is not required. This monitoring need not be done if the manufacturer can demonstrate that deterioration or malfunction of the system will not result in exceedance of the threshold.

(B) If equipped with a particulate trap, catastrophic failure of the device must be detected. Any particulate trap whose complete failure results in exhaust emissions exceeding 1.5 times the applicable standard or FEL for NMHC (or NO_X+NMHC, as applicable) or PM must be monitored for such catastrophic failure. This monitoring need not be done if the manufacturer can demonstrate that a catastrophic failure of the system will not result in exceedance of the threshold.

(2) *Engine Misfire.* (i) *Otto-cycle.* Engine misfire resulting in exhaust emissions exceeding 1.5 times the applicable standard or FEL for NMHC, NO_X (or NO_X+NMHC, as applicable) or CO; and any misfire capable of damaging the catalytic converter.

(ii) *Diesel.* Lack of cylinder combustion must be detected.

(3) Oxygen sensors. If equipped, oxygen sensor deterioration or malfunction resulting in exhaust emissions exceeding 1.5 times the applicable standard or FEL for NMHC, NO_X (or NO_X+NMHC, as applicable) or CO.

(4) *Evaporative leaks.* If equipped, any vapor leak in the evaporative and/or refueling system (excluding the tubing and connections between the purge valve and the intake manifold) greater than or equal in magnitude to a leak caused by a 0.040 inch diameter orifice; an absence of evaporative purge air flow from the complete evaporative emission control system. Where fuel tank capacity is greater than 25 gallons, the Administrator may, following a request from the manufacturer, revise the size of the orifice to the smallest orifice feasible, based on test data, if the most reliable monitoring method available cannot reliably detect a system leak equal to a 0.040 inch diameter orifice.

(5) *Other emission control systems.* Any deterioration or malfunction occurring in an engine system or component directly intended to control emissions, including but not necessarily limited to, the exhaust gas recirculation (EGR) system, if equipped, the secondary air system, if equipped, and the fuel control system, singularly resulting in exhaust emissions exceeding 1.5 times the applicable emission standard or FEL for NMHC, NO_X (or NO_X+NMHC, as applicable), CO or diesel PM. For engines equipped with a secondary air system, a functional check, as described in paragraph (b)(6) of this section, may satisfy the requirements of this paragraph (b)(5) provided the manufacturer can demonstrate that deterioration of the flow distribution system is unlikely. This demonstration is subject to Administrator approval and, if the demonstration and associated functional check are approved, the diagnostic system must indicate a malfunction when some degree of secondary airflow is not detectable in the exhaust system during the check. For engines equipped with positive crankcase ventilation (PCV), monitoring of the PCV system is not necessary provided the manufacturer can demonstrate to the Administrator's satisfaction that the PCV system is unlikely to fail.

(6) *Other emission-related engine components.* Any other deterioration or malfunction occurring in an electronic emission-related engine system or component not otherwise described above that either provides input to or receives commands from the on-board computer and has a measurable impact on emissions; monitoring of components required by this paragraph (b)(6) must be satisfied by employing electrical circuit continuity checks and rationality checks for computer input components (input values within manufacturer specified ranges based on other available operating parameters), and functionality checks for computer output components (proper functional response to computer commands) except that the Administrator may waive such a rationality or functionality check where the manufacturer has demonstrated infeasibility. Malfunctions are defined as a failure of the system or component to meet the electrical circuit continuity checks or the rationality or functionality checks.

(7) *Performance of OBD functions.* Oxygen sensor or any other component deterioration or malfunction which renders that sensor or component incapable of performing its function as part of the OBD system must be detected and identified on vehicles so equipped.

(c) *Malfunction indicator light (MIL).* The OBD system must incorporate a malfunction indicator light (MIL) readily visible to the vehicle operator. When illuminated, the MIL must display ''Check Engine,'' ''Service Engine Soon,'' a universally recognizable engine symbol, or a similar phrase or symbol approved by the Administrator. More than one general purpose malfunction indicator light for emission-related problems should not be used; separate specific purpose warning lights (*e.g.*, brake system, fasten seat belt, oil pressure, etc.) are permitted.

The use of red for the OBD-related malfunction indicator light is prohibited.

(d) *MIL illumination*. The MIL must illuminate and remain illuminated when any of the conditions specified in paragraph (b) of this section are detected and verified, or whenever the engine control enters a default or secondary mode of operation considered abnormal for the given engine operating conditions. The MIL must blink once per second under any period of operation during which engine misfire is occurring and catalyst damage is imminent. If such misfire is detected again during the following driving cycle (*i.e.*, operation consisting of, at a minimum, engine start-up and engine shut-off) or the next driving cycle in which similar conditions are encountered, the MIL must maintain a steady illumination when the misfire is not occurring and then remain illuminated until the MIL extinguishing criteria of this section are satisfied. The MIL must also illuminate when the vehicle's ignition is in the ''key-on'' position before engine starting or cranking and extinguish after engine starting if no malfunction has previously been detected. If a fuel system or engine misfire malfunction has previously been detected, the MIL may be extinguished if the malfunction does not reoccur during three subsequent sequential trips during which similar conditions are encountered and no new malfunctions have been detected. Similar conditions are defined as engine speed within 375 rpm, engine load within 20 percent, and engine warm-up status equivalent to that under which the malfunction was first detected. If any malfunction other than a fuel system or engine misfire malfunction has been detected, the MIL may be extinguished if the malfunction does not reoccur during three subsequent sequential trips during which the monitoring system responsible for illuminating the MIL functions without detecting the malfunction, and no new malfunctions have been detected. Upon Administrator approval, statistical MIL illumination protocols may be employed, provided they result in comparable timeliness in detecting a malfunction and evaluating system performance, *i.e.*, three to six driving cycles would be considered acceptable.

(e) *Storing of computer codes*. The OBD system shall record and store in computer memory diagnostic trouble codes and diagnostic readiness codes indicating the status of the emission control system. These codes shall be available through the standardized data link connector per specifications as referenced in paragraph (h) of this section.

(1) A diagnostic trouble code must be stored for any detected and verified malfunction causing MIL illumination. The stored diagnostic trouble code must identify the malfunctioning system or component as uniquely as possible. At the manufacturer's discretion, a diagnostic trouble code may be stored for conditions not causing MIL illumination. Regardless, a separate code should be stored indicating the expected MIL illumination status (*i.e.*, MIL commanded ''ON,'' MIL commanded ''OFF'').

(2) For a single misfiring cylinder, the diagnostic trouble code(s) must uniquely identify the cylinder, unless the manufacturer submits data and/or engineering evaluations which adequately demonstrate that the misfiring cylinder cannot be reliably identified under certain operating conditions. For diesel engines only, the specific cylinder for which combustion cannot be detected need not be identified if new hardware would be required to do so. The diagnostic trouble code must identify multiple misfiring cylinder conditions; under multiple misfire conditions, the misfiring cylinders need not be uniquely identified if a distinct multiple misfire diagnostic trouble code is stored.

(3) The diagnostic system may erase a diagnostic trouble code if the same code is not re-registered in at least 40 engine warm-up cycles, and the malfunction indicator light is not illuminated for that code.

(4) Separate status codes, or readiness codes, must be stored in computer memory to identify correctly functioning emission control systems and those emission control systems which require further engine operation to complete proper diagnostic evaluation. A readiness code need not be stored for

those monitors that can be considered continuously operating monitors (*e.g.*, misfire monitor, fuel system monitor, etc.). Readiness codes should never be set to ''not ready'' status upon key-on or key-off; intentional setting of readiness codes to ''not ready'' status via service procedures must apply to all such codes, rather than applying to individual codes. Subject to Administrator approval, if monitoring is disabled for a multiple number of driving cycles (*i.e.*, more than one) due to the continued presence of extreme operating conditions (*e.g.*, ambient temperatures below 40 °F, or altitudes above 8000 feet), readiness for the subject monitoring system may be set to ''ready'' status without monitoring having been completed. Administrator approval shall be based on the conditions for monitoring system disablement, and the number of driving cycles specified without completion of monitoring before readiness is indicated.

(f) *Available diagnostic data.* (1) Upon determination of the first malfunction of any component or system, ''freeze frame'' engine conditions present at the time must be stored in computer memory. Should a subsequent fuel system or misfire malfunction occur, any previously stored freeze frame conditions must be replaced by the fuel system or misfire conditions (whichever occurs first). Stored engine conditions must include, but are not limited to: engine speed, open or closed loop operation, fuel system commands, coolant temperature, calculated load value, fuel pressure, vehicle speed, air flow rate, and intake manifold pressure if the information needed to determine these conditions is available to the computer. For freeze frame storage, the manufacturer must include the most appropriate set of conditions to facilitate effective repairs. If the diagnostic trouble code causing the conditions to be stored is erased in accordance with paragraph (d) of this section, the stored engine conditions may also be erased.

(2) The following data in addition to the required freeze frame information must be made available on demand through the serial port on the standardized data link connector, if the information is available to the on-board computer or can be determined using information available to the on-board computer: Diagnostic trouble codes, engine coolant temperature, fuel control system status (closed loop, open loop, other), fuel trim, ignition timing advance, intake air temperature, manifold air pressure, air flow rate, engine RPM, throttle position sensor output value, secondary air status (upstream, downstream, or atmosphere), calculated load value, vehicle speed, and fuel pressure. The signals must be provided in standard units based on SAE specifications incorporated by reference in paragraph (h) of this section. Actual signals must be clearly identified separately from default value or limp home signals.

(3) For all OBD systems for which specific on-board evaluation tests are conducted (catalyst, oxygen sensor, etc.), the results of the most recent test performed by the vehicle, and the limits to which the system is compared must be available through the standardized data link connector per the appropriate standardized specifications as referenced in paragraph (h) of this section.

(4) Access to the data required to be made available under this section shall be unrestricted and shall not require any access codes or devices that are only available from the manufacturer.

(g) *Exceptions.* The OBD system is not required to evaluate systems or components during malfunction conditions if such evaluation would result in a risk to safety or failure of systems or components. Additionally, the OBD system is not required to evaluate systems or components during operation of a power take-off unit such as a dump bed, snow plow blade, or aerial bucket, etc.

(h) *Reference materials.* The OBD system shall provide for standardized access and conform with the following Society of Automotive Engineers (SAE) standards and/or the following International Standards Organization (ISO) standards. The following documents are incorporated by reference, see § 86.1:

(1) SAE material. Copies of these materials may be obtained from the Society of Automotive Engineers, Inc., 400

Commonwealth Drive, Warrendale, PA 15096–0001.

(i) SAE J1850 ''Class B Data Communication Network Interface,'' (Revised, May 2001) shall be used as the on-board to off-board communications protocol. All emission related messages sent to the scan tool over a J1850 data link shall use the Cyclic Redundancy Check and the three byte header, and shall not use inter-byte separation or check sums.

(ii) Basic diagnostic data (as specified in § 86.094–17(e) and (f)) shall be provided in the format and units in SAE J1979 ''E/E Diagnostic Test Modes—Equivalent to ISO/DIS 15031–5: April 30, 2002'', (Revised, April 2002).

(iii) Diagnostic trouble codes shall be consistent with SAE J2012 ''Diagnostic Trouble Code Definitions—Equivalent to ISO/DIS 15031–6: April 30, 2002'', (Revised, April 2002).

(iv) The connection interface between the OBD system and test equipment and diagnostic tools shall meet the functional requirements of SAE J1962 ''Diagnostic Connector—Equivalent to ISO/DIS 15031–3: December 14, 2001'' (Revised, April 2002).

(v) All acronyms, definitions and abbreviations shall be formatted according to SAE J1930 ''Electrical/Electronic Systems Diagnostic Terms, Definitions, Abbreviations, and Acronyms'' Equivalent to ISO/TR 15031–2: April 30, 2002'', (Revised, April 2002).

(vi) All equipment used to interface, extract and display OBD-related information shall meet SAE J1978 ''OBD II Scan Tool'' Equivalent to ISO 15031–4: December 14, 2001'', (Revised, April 2002).

(vii) As an alternative to the above standards, heavy-duty vehicles may conform to the specifications of the SAE J1939 series of standards (SAE J1939–11, J1939–13, J1939–21, J1939–31, J1939–71, J1939–73, J1939–81).

(2) ISO materials. Copies of these materials may be obtained from the International Organization for Standardization, Case Postale 56, CH–1211 Geneva 20, Switzerland.

(i) ISO 9141–2 ''Road vehicles—Diagnostic systems—Part 2: CARB requirements for interchange of digital information,'' (February 1, 1994) may be used as an alternative to SAE J1850 as the on-board to off-board communications protocol.

(ii) ISO 14230–4:2000(E) ''Road vehicles—Diagnostic systems—KWP 2000 requirements for Emission-related systems'', (June 1, 2000) may also be used as an alternative to SAE J1850.

(iii) ISO 15765–4.3:2001 ''Road Vehicles-Diagnostics on Controller Area Network (CAN)—Part 4: Requirements for emission-related systems'', (December 14, 2001) may also be used as an alternative to SAE J1850.

(3) Beginning with the 2008 model year and beyond, ISO 15765–4.3:2001 ''Road Vehicles-Diagnostics on Controller Area Network (CAN)—Part 4: Requirements for emission-related systems'', (December 14, 2001) shall be the only acceptable protocol used for standardized on-board to off-board communications for vehicles below 8500 pounds. For vehicles 8500 to 14000 pounds ISO 15765–4.3 or the SAE J1939 series of standards (SAE J1939–11, J1939–13, J1939–21, J1939–31, J1939–71, J1939–73, J1939–81). All other standardized on-board to off-board communications protocols: SAE J1850 ''Class B Data Communication Network Interface,'' (Revised, May 2001) in (h)(1)(i), ISO 9141–2 ''Road vehicles—Diagnostic systems—Part 2: CARB requirements for interchange of digital information,'' (February 1, 1994) in (h)(2)(i), and ISO 14230–4 ''Road vehicles—Diagnostic systems—KWP 2000 requirements for Emission-related systems'', (June 1, 2000) in paragraph (h)(2)(ii) of this section will at that time no longer be accepted.

(i) *Deficiencies and alternate fueled engines.* Upon application by the manufacturer, the Administrator may accept an OBD system as compliant even though specific requirements are not fully met. Such compliances without meeting specific requirements, or deficiencies, will be granted only if compliance would be infeasible or unreasonable considering such factors as, but not limited to: technical feasibility of the given monitor and lead time and production cycles including phase-in or phase-out of engines or vehicle designs and programmed upgrades of computers. Unmet requirements should not be carried over from the previous model year except where unreasonable

hardware or software modifications would be necessary to correct the deficiency, and the manufacturer has demonstrated an acceptable level of effort toward compliance as determined by the Administrator. Furthermore, EPA will not accept any deficiency requests that include the complete lack of a major diagnostic monitor (''major'' diagnostic monitors being those for exhaust aftertreatment devices, oxygen sensor, engine misfire, evaporative leaks, and diesel EGR, if equipped), with the possible exception of the special provisions for alternate fueled engines. For alternate fueled heavy-duty engines (*e.g.* natural gas, liquefied petroleum gas, methanol, ethanol), beginning with the model year for which alternate fuel emission standards are applicable and extending through the 2006 model year, manufacturers may request the Administrator to waive specific monitoring requirements of this section for which monitoring may not be reliable with respect to the use of the alternate fuel. At a minimum, alternate fuel engines must be equipped with an OBD system meeting OBD requirements to the extent feasible as approved by the Administrator.

(j) *California OBDII compliance option.* For heavy-duty engines weighing 14,000 pounds GVWR or less, demonstration of compliance with California OBD II requirements (Title 13 California Code of Regulations § 1968.2 (13 CCR 1968.2)), as modified, approved and filed on April 21, 2003, shall satisfy the requirements of this section, except that compliance with 13 CCR 1968.2(e)(4.2.2)(C), pertaining to 0.02 inch evaporative leak detection, and 13 CCR 1968.2(d)(1.4), pertaining to tampering protection, are not required to satisfy the requirements of this section. Also, the deficiency provisions of 13 CCR 1968.2(i) do not apply. The deficiency provisions of paragraph (i) of this section and the evaporative leak detection requirement of paragraph (b)(4) of this section apply to manufacturers selecting this paragraph for demonstrating compliance. In addition, demonstration of compliance with 13 CCR 1968.2(e)(16.2.1)(C), to the extent it applies to the verification of proper alignment between the camshaft and crankshaft, applies only to vehicles equipped with variable valve timing.

(k) *Phase-in for heavy-duty engines.* Manufacturers of heavy-duty engines must comply with the OBD requirements in this section according to the following phase-in schedule, based on the percentage of projected engine sales within each category. The 2004 model year requirements in the following phase-in schedule are applicable only to heavy-duty Otto-cycle engines where the manufacturer has selected Otto-cycle Option 1 or Option 2 for alternative 2004 compliance according to § 86.005–01(c)(1) or (2). The 2005 through 2007 requirements in the following phase-in schedule apply to all heavy-duty engines intended for use in a heavy-duty vehicle weighing 14,000 pounds GVWR or less. Manufacturers may exempt 2005 model year diesel heavy-duty engines from the requirements of this section if the 2005 model year commences before July 31, 2004 from the requirements of this section. Manufacturers may exempt 2005 model year Otto-cycle heavy-duty engines and vehicles from the requirements of this section if the manufacturer has selected Otto-cycle Option 3 and if the 2005 model year commences before July 31, 2004. For the purposes of calculating compliance with the phase-in provisions of this paragraph (k), heavy-duty engines may be combined with heavy-duty vehicles subject to the phase-in requirements of paragraph § 86.1806–05(l). The OBD Compliance phase-in table follows:

OBD COMPLIANCE PHASE-IN FOR HEAVY-DUTY ENGINES INTENDED FOR USE IN A HEAVY-DUTY VEHICLE WEIGHING 14,000 POUNDS GVWR OR LESS

Model year	Otto-cycle phase-in based on projected sales	Diesel Phase-in based on projected sales
2004 MY	Applicable only to Otto-cycle engines complying with Options 1 or 2; 40% compliance; alternative fuel waivers available.	
2005 MY	60% compliance; alternative fuel waivers available.	50% compliance; alternative fuel waivers available.

OBD COMPLIANCE PHASE-IN FOR HEAVY-DUTY ENGINES INTENDED FOR USE IN A HEAVY-DUTY VEHICLE WEIGHING 14,000 POUNDS GVWR OR LESS—Continued

Model year	Otto-cycle phase-in based on projected sales	Diesel Phase-in based on projected sales
2006 MY	80% compliance; alternative fuel waivers available.	50% compliance; alternative fuel waivers available.
2007 MY	80% compliance; alternative fuel waivers available.	100% compliance.
2008+ MY	100% compliance	100% compliance.

[65 FR 59951, Oct. 6, 2000, as amended at 66 FR 5160, Jan. 18, 2001; 70 FR 75410, Dec. 20, 2005]

§ 86.007–11 Emission standards and supplemental requirements for 2007 and later model year diesel heavy-duty engines and vehicles.

This section applies to new 2007 and later model year diesel HDEs. Section 86.007–11 includes text that specifies requirements that differ from § 86.004–11. Where a paragraph in § 86.004–11 is identical and applicable to § 86.007–11, this may be indicated by specifying the corresponding paragraph and the statement ''[Reserved]. For guidance see § 86.004–11.''.

(a)(1) Exhaust emissions from new 2007 and later model year diesel HDEs shall not exceed the following:

(i) *Oxides of Nitrogen (NO_X).* (A) 0.20 grams per brake horsepower-hour (0.075 grams per megajoule).

(B) A manufacturer may elect to include any or all of its diesel HDE families in any or all of the NO_X and NO_X plus NMHC emissions ABT programs for HDEs, within the restrictions described in § 86.007–15 or § 86.004–15. If the manufacturer elects to include engine families in any of these programs, the NO_X FELs may not exceed the following FEL caps: 2.00 grams per brake horsepower-hour (0.75 grams per megajoule) for model years before 2010; 0.50 grams per brake horsepower-hour (0.19 grams per megajoule) for model years 2010 and later. This ceiling value applies whether credits for the family are derived from averaging, banking, or trading programs.

(ii)(A) *Non-Methane Hydrocarbons (NMHC) for engines fueled with either diesel fuel, natural gas, or liquefied petroleum gas.* 0.14 grams per brake horsepower-hour (0.052 grams per megajoule).

(B) *Non-Methane Hydrocarbon Equivalent (NMHCE) for engines fueled with methanol.* 0.14 grams per brake horsepower-hour (0.052 grams per megajoule).

(iii) *Carbon monoxide.* (A) 15.5 grams per brake horsepower-hour (5.77 grams per megajoule).

(B) 0.50 percent of exhaust gas flow at curb idle (methanol-, natural gas-, and liquefied petroleum gas-fueled diesel HDEs only). This does not apply for vehicles certified to the requirements of § 86.005–17

(iv) *Particulate.* (A) 0.01 grams per brake horsepower-hour (0.0037 grams per megajoule).

(B) A manufacturer may elect to include any or all of its diesel HDE families in any or all of the particulate ABT programs for HDEs, within the restrictions described in § 86.007–15 or other applicable sections. If the manufacturer elects to include engine families in any of these programs, the particulate FEL may not exceed 0.02 grams per brake horsepower-hour (0.0075 grams per megajoule).

(2) The standards set forth in paragraph (a)(1) of this section refer to the exhaust emitted over the duty cycle specified in paragraphs (a)(2)(i) through (iii) of this section, where exhaust emissions are measured and calculated as specified in paragraphs (a)(2)(iv) and (v) of this section in accordance with the procedures set forth in 40 CFR part 1065, except as noted in § 86.007–23(c)(2):

(i) Perform the test interval set forth in paragraph (f)(2) of Appendix I of this part with a cold-start according to 40 CFR part 1065, subpart F. This is the cold-start test interval.

(ii) Shut down the engine after completing the test interval and allow 20 minutes to elapse. This is the hot-soak.

(iii) Repeat the test interval. This is the hot-start test interval.

(iv) Calculate the total emission mass of each constituent, m, and the

total work, W, over each test interval according to 40 CFR 1065.650.

(v) Determine your engine's brake-specific emissions using the following calculation, which weights the emissions from the cold-start and hot-start test intervals:

$$\text{brake-specific emissions} = \frac{m_{\text{cold-start}} + 6\square m_{\text{hot-start}}}{W_{\text{cold-start}} + 6\square W_{\text{hot-start}}}$$

(3) *SET* (i) Exhaust emissions, as determined under § 86.1360–2007(b) pertaining to the supplemental emission test cycle, for each regulated pollutant shall not exceed 1.0 times the applicable emission standards or FELs specified in paragraph (a)(1) of this section.

(ii) For engines not having a NO_X FEL less than1.5 g/bhp-hr, gaseous exhaust emissions shall not exceed the steady-state interpolated values determined by the Maximum Allowable Emission Limits (for the corresponding speed and load), as determined under § 86.1360–2007(f), when the engine is operated in the steady-state control area defined under § 86.1360–2007(d).

(4) *NTE* (i)(A) The brake-specific exhaust NMHC or NO_X emissions in g/bhp-hr, as determined under § 86.1370–2007 pertaining to the not-to-exceed test procedures, shall not exceed 1.5 times the applicable NMHC or NO_X emission standards or FELs specified in paragraph (a)(1) of this section, during engine and vehicle operation specified in paragraph (a)(4)(ii) of this section except as noted in paragraph (a)(4)(iii) of this section.

(B) For engines not having a NO_X FEL less than1.50 g/bhp-hr, the brake-specific NO_X and NMHC exhaust emissions in g/bhp-hr, as determined under § 86.1370–2007 pertaining to the not-to-exceed test procedures, shall not exceed 1.25 times the applicable emission standards or FELs specified in paragraph (a)(1) of this section (or of § 86.004–11, as allowed by paragraph (g) of this section), during engine and vehicle operation specified in paragraph (a)(4)(ii) of this section except as noted in paragraph (a)(4)(iii) of this section.

(C) The brake-specific exhaust PM emissions in g/bhp-hr, as determined under § 86.1370–2007 pertaining to the not-to-exceed test procedures, shall not exceed 1.5 times the applicable PM emission standards or FEL (for FELs above the standard only) specified in paragraph (a)(1) of this section, during engine and vehicle operation specified in paragraph (a)(4)(ii) of this section except as noted in paragraph (a)(4)(iii) of this section.

(D) The brake-specific exhaust CO emissions in g/bhp-hr, as determined under § 86.1370–2007 pertaining to the not-to-exceed test procedures, shall not exceed 1.25 times the applicable CO emission standards or FEL specified in paragraph (a)(1) of this section, during engine and vehicle operation specified in paragraph (a)(4)(ii) of this section except as noted in paragraph (a)(4)(iii) of this section.

(ii) For each engine family, the not-to-exceed emission limits must apply during one of the following two ambient operating regions:

(A) The not-to-exceed limits apply for all altitudes less than or equal to 5,500 feet above sea-level, during all ambient conditions (temperature and humidity). Temperature and humidity ranges for which correction factors are allowed are specified in § 86.1370–2007(e); or

(B)(*1*) The not-to-exceed emission limits apply at all altitudes less than or equal to 5,500 feet above sea-level, for temperatures less than or equal to the temperature determined by the following equation at the specified altitude:

$$T = -0.00254 \times A + 100$$

Where:

T = ambient air temperature in degrees Fahrenheit.

A = altitude in feet above sea-level (A is negative for altitudes below sea-level).

(*2*) Temperature and humidity ranges for which correction factors are allowed are specified in § 86.1370–2007(e);

(iii) For engines equipped with exhaust gas recirculation, the not-to-exceed emission limits specified in paragraph (a)(4)(i) of this section do not apply to engine or vehicle operation during cold operating conditions as specified in § 86.1370–2007(f).

(iv) *Deficiencies for NTE emission standards.* (A) For model years 2007 through 2009, upon application by the manufacturer, the Administrator may accept a HDDE as compliant with the NTE standards even though specific requirements are not fully met. Such compliances without meeting specific requirements, or deficiencies, will be granted only if compliance would be infeasible or unreasonable considering such factors as, but not limited to: Technical feasibility of the given hardware and lead time and production cycles including phase-in or phase-out of engines or vehicle designs and programmed upgrades of computers. Deficiencies will be approved on an engine model and/or horsepower rating basis within an engine family, and each approval is applicable for a single model year. A manufacturer's application must include a description of the auxiliary emission control device(s) which will be used to maintain emissions to the lowest practical level, considering the deficiency being requested, if applicable. An application for a deficiency must be made during the certification process; no deficiency will be granted to retroactively cover engines already certified.

(B) Unmet requirements should not be carried over from the previous model year except where unreasonable hardware or software modifications would be necessary to correct the deficiency, and the manufacturer has demonstrated an acceptable level of effort toward compliance as determined by the Administrator. The NTE deficiency should only be seen as an allowance for minor deviations from the NTE requirements. The NTE deficiency provisions allow a manufacturer to apply for relief from the NTE emission requirements under limited conditions. EPA expects that manufacturers should have the necessary functioning emission control hardware in place to comply with the NTE.

(C) For model years 2010 through 2013, the Administrator may allow up to three deficiencies per engine family. The provisions of paragraphs (a)(4)(iv)(A) and (B) of this section apply for deficiencies allowed by this paragraph (a)(4)(iv)(C). In determining whether to allow the additional deficiencies, the Administrator may consider any relevant factors, including the factors identified in paragraph (a)(4)(iv)(A) of this section. If additional deficiencies are approved, the Administrator may set any additional conditions that he/she determines to be appropriate.

(v) The emission limits specified in paragraphs (a)(3) and (a)(4) of this section shall be rounded to the same number of significant figures as the applicable standards in paragraph (a)(1) of this section using ASTM E29–93a (Incorporated by reference at § 86.1).

(vi) Manufacturers are not required to provide engine information exclusively related to in-use testing as part of initial certification. However, upon request from EPA the manufacturers must provide the information which clearly identifies parameters defining all NTE deficiencies described under paragraph (a)(4)(iv) of this section and parameters defining all NTE limited testing regions described under § 86.1370–2007(b)(6) and (7) that are requested. When requested, deficiencies and limited testing regions must be reported for all engine families and power ratings in English with sufficient detail for us to determine if a particular deficiency or limited testing region will be encountered in the emission test data from the portable emission-sampling equipment and field-testing procedures referenced in § 86.1375. Such information is to be provided within 60 days of the request from EPA.

(b)(1) introductory text through (b)(1)(iii) [Reserved]. For guidance see § 86.004–11.

(b)(1)(iv) Operation within the NTE zone (defined in § 86.1370–2007) must comply with a filter smoke number of 1.0 under steady-state operation, or the following alternate opacity limits:

(A) A 30 second transient test average opacity limit of 4% for a 5 inch path; and

(B) A 10 second steady state test average opacity limit of 4% for a 5 inch path.

(2)(i) The standards set forth in § 86.004–11 (b)(1)(i)–(iii) refer to exhaust smoke emissions generated under the conditions set forth in subpart I of this part and measured and calculated in accordance with those procedures.

(ii) The standards set forth in paragraph (b)(1)(iv) of this section refer to exhaust smoke emissions generated under the conditions set forth in § 86.1370–2007 and calculated in accordance with the procedures set forth in § 86.1372–2007.

(b)(3) and (b)(4) [Reserved]. For guidance see § 86.004–11.

(c) No crankcase emissions shall be discharged directly into the ambient atmosphere from any new 2007 or later model year diesel HDE, with the following exception: HDEs equipped with turbochargers, pumps, blowers, or superchargers for air induction may discharge crankcase emissions to the ambient atmosphere if the emissions are added to the exhaust emissions (either physically or mathematically) during all emission testing. Manufacturers taking advantage of this exception must manufacture the engines so that all crankcase emission can be routed into a dilution tunnel (or other sampling system approved in advance by the Administrator), and must account for deterioration in crankcase emissions when determining exhaust deterioration factors. For the purpose of this paragraph (c), crankcase emissions that are routed to the exhaust upstream of exhaust aftertreatment during all operation are not considered to be ''discharged directly into the ambient atmosphere.''

(d) Every manufacturer of new motor vehicle engines subject to the standards prescribed in this section shall, prior to taking any of the actions specified in section 203(a)(1) of the Act, test or cause to be tested motor vehicle engines in accordance with applicable procedures in subpart I or N of this part to ascertain that such test engines meet the requirements of paragraphs (a), (b), (c), and (d) of this section.

(e) [Reserved]. For guidance see § 86.004–11.

(f) (1) Model year 2007 and later diesel-fueled heavy-duty engines and vehicles for sale in Guam, American Samoa, or the Commonwealth of the Northern Mariana Islands shall be subject to the same standards and requirements as apply to 2006 model year diesel heavy-duty engines and vehicles, but only if the vehicle or engine bears a permanently affixed label stating:

THIS ENGINE (or VEHICLE, as applicable) CONFORMS TO US EPA EMISSION STANDARDS APPLICABLE TO MODEL YEAR 2006. THIS ENGINE (or VEHICLE, as applicable) DOES NOT CONFORM TO US EPA EMISSION REQUIREMENTS IN EFFECT AT TIME OF PRODUCTION AND MAY NOT BE IMPORTED INTO THE UNITED STATES OR ANY TERRITORY OF THE UNITED STATES EXCEPT GUAM, AMERICAN SAMOA, OR THE COMMONWEALTH OF THE NORTHERN MARIANA ISLANDS.

(2) The importation or sale of such a vehicle or engine for use at any location U.S. other than Guam, American Samoa, or the Commonwealth of the Northern Mariana Islands shall be considered a violation of section 203(a)(1) of the Clean Air Act. In addition, vehicles or vehicle engines subject to this exemption may not subsequently be imported or sold into any state or territory of the United States other than Guam, American Samoa, or Commonwealth of the Northern Mariana Islands.

(g) Phase-in options. (1) For model years 2007, 2008, and 2009, manufacturers may certify some of their engine families to the combined NO_X plus NMHC standard applicable to model year 2006 engines under § 86.004–11, in lieu of the separate NO_X and NMHC standards specified in paragraph (a)(1) of this section. These engines must comply with all other requirements applicable to model year 2007 engines. The combined number of engines in the engine families certified to the 2006 combined NO_X plus NMHC standard may not exceed 50 percent of the manufacturer's U.S.-directed production of heavy-duty diesel motor vehicle engines for model year 2007, 2008, or 2009, except as explicitly allowed by this paragraph (g).

(2)(i) Manufacturers certifying engines to all of the applicable standards listed in paragraph (a) and (c) of this section (without using credits) prior to

model year 2007 may reduce the number of engines that are required to meet the standards listed in paragraph (a) of this section in model year 2007, 2008 and/or 2009, taking into account the phase-in option provided in paragraph (g)(1) of this section. For every two engines that are certified early, the manufacturer may reduce the number of engines that are required by paragraph (g)(1) of this section to meet standards listed in paragraph (a)(1) of this section by three engines. For example, if a manufacturer produces 100 heavy-duty diesel engines in 2006 that meet all of the applicable standards listed in paragraph (a) of this section, and it produced 10,000 heavy-duty diesel engines in 2007, then only 4,850 ((10,000)(0.50) − (100)(1.5)) of the engines would need to comply with the standards listed in paragraph (a) of this section.

(ii) Manufacturers certifying engines to the PM standards listed in paragraph (a), and to all of the applicable standards in paragraph (c) of this section (without using credits) prior to model year 2007 may reduce the number of engines that are required to meet the PM standard listed in paragraph (a) of this section in model year 2007, 2008 and/or 2009. For every two engines that are certified to the PM standard early, the manufacturer may reduce the number of engines that are otherwise required to meet the PM standard listed in paragraph (a)(1) of this section by three engines.

(3) Manufacturers may initially base compliance with the phase-in requirements of paragraph (g)(1) or (g)(2) of this section on projected U.S.-directed production estimates. This is allowed for model year 2007 and/or 2008. However, if a manufacturer's actual U.S. directed production volume of engines that comply with the model year 2007 NO_X and NMHC standards is less than the required amount, the shortfall (in terms of number of engines) must be made up prior to 2010. For example, if a manufacturer plans in good faith to produce 50 percent of its projected 10,000 2007 engines (i.e., 5,000 engines) in compliance with the 2007 NO_X and NMHC standard, but is only able to produce 4,500 such engines of an actual 10,000 2007 engines, the manufacturer would need to produce an extra 500 engines in 2008 or 2009 in compliance with the 2007 NO_X and NMHC standard. The deficit allowed by this paragraph (g)(3) may not exceed 25 percent of the U.S. directed production volume.

(4) Manufacturers certifying engines to a voluntary NO_X standard of 0.10 g/bhp-hr (without using credits) in addition to all of the other applicable standards listed in paragraphs (a) and (c) of this section prior to model year 2007 may reduce the number of engines that are required to meet the standards listed in paragraph (a)(1) of this section in model year 2007, 2008 and/or 2009, taking into account the phase-in option provided in paragraph (g)(1) of this section. For every engine that is certified early under this provision, the manufacturer may reduce the number of engines that are required by paragraph (g)(1) of this section to meet the standards listed in paragraph (a)(1) of this section by two engines.

(5) For engines certified under paragraph (g)(1) of this section to the NO_X+NMHC standard in § 86.004–11, the standards or FELs to which they are certified shall be used for the purposes of paragraphs (a)(3) and (a)(4) of this section.

(6) Manufacturers may determine the number of engines and vehicles that are required to certify to the NO_X standard in this section (including the phase-out engines certified to the NO_X+NMHC standard referenced in this paragraph(g)) based on calendar years 2007, 2008, and 2009, rather than model years 2007, 2008, and 2009.

(h)(1) For model years prior to 2012, for purposes of determining compliance after title or custody has transferred to the ultimate purchaser, for engines having a NO_X FEL no higher than 1.30 g/bhp-hr, the applicable compliance limit shall be determined by adding the applicable adjustment from paragraph (h)(2) of this section to the otherwise applicable standard or FEL for NO_X.

(2)(i) For engines with 110,000 or fewer miles, the adjustment is 0.10 g/bhp-hr.

(ii) For engines with 110,001 to 185,000 miles, the adjustment is 0.15 g/bhp-hr.

(iii) For engines with 185,001 or more miles, the adjustment is 0.20 g/bhp-hr.

(3) For model years prior to 2012, for purposes of determining compliance after title or custody has transferred to the ultimate purchaser, the applicable compliance limit shall be determined by adding 0.01 g/bhp-hr to the otherwise applicable standard or FEL for PM.

[65 FR 59954, Oct. 6, 2000, as amended at 66 FR 5161, Jan. 18, 2001; 70 FR 34619, June 14, 2005; 70 FR 40432, July 13, 2005]

§ 86.007–15 NO_X and particulate averaging, trading, and banking for heavy-duty engines.

Section 86.007–15 includes text that specifies requirements that differ from § 86.004–15. Where a paragraph in § 86.004–15 is identical and applicable to § 86.007–15, this may be indicated by specifying the corresponding paragraph and the statement ''[Reserved]. For guidance see § 86.004–15.''

(a)–(l) [Reserved]. For guidance see § 86.004–15.

(m) The following provisions apply for model year 2007 and later engines (including engines certified during years 2007–2009 under the phase-in provisions of § 86.007–11(g)(1), § 86.005–10(a), or § 86.008–10(f)(1)). These provisions apply instead of the provisions of paragraphs § 86.004–15 (a) through (k) to the extent that they are in conflict.

(1) Manufacturers of Otto-cycle engines may participate in an NMHC averaging, banking and trading program to show compliance with the standards specified in § 86.008–10. The generation and use of NMHC credits are subject to the same provisions in paragraphs § 86.004–15 (a) through (k) that apply for NO_X plus NMHC credits, except as otherwise specified in this section.

(2) Credits are calculated as NO_X or NMHC credits for engines certified to separate NO_X and NMHC standards. NO_X plus NMHC credits (including banked credits and credits that are generated during years 2007–2009 under the phase-in provisions of § 86.007–11(g)(1), § 86.005–10(a), or § 86.008–10(f)(1)) may be used to show compliance with 2007 or later NO_X standards (NO_X or NMHC standards for Otto-cycle engines), subject to an 0.8 discount factor (e.g., 100 grams of NO_X plus NMHC credits is equivalent to 80 grams of NO_X credits).

(3) NO_X or NMHC (or NO_X plus NMHC) credits may be exchanged between heavy-duty Otto-cycle engine families certified to the engine standards of this subpart and heavy-duty Otto-cycle engine families certified to the chassis standards of subpart S of this part, subject to an 0.8 discount factor (e.g., 100 grams of NO_X (or NO_X plus NMHC) credits generated from engines would be equivalent to 80 grams of NO_X credits if they are used in the vehicle program of subpart S, and vice versa).

(4) Credits that were previously discounted when they were banked according to paragraph (c) of § 86.004–15, are subject to an additional discount factor of 0.888 instead of the 0.8 discount factor otherwise required by paragraph (m)(2) or (m)(3) of this section. This results in a total discount factor of 0.8 ($0.9 \times 0.888 = 0.8$).

(5) For diesel engine families, the combined number of engines certified to FELs higher than 0.50 g/bhp-hr using banked NO_X (and/or NO_X plus NMHC) credits in any given model year may not exceed 10 percent of the manufacturer's U.S.-directed production of engines in all heavy-duty diesel engine families for that model year.

(6) The FEL must be expressed to the same number of decimal places as the standard (generally, one-hundredth of a gram per brake horsepower-hour). For engines certified to standards expressed only one-tenth of a gram per brake horsepower-hour, if the FEL is below 1.0, then add a zero to the standard in the second decimal place and express the FEL to nearest one-hundredth of a gram per brake horsepower-hour.

(7) Credits are to be rounded to the nearest one-hundredth of a Megagram using ASTM E29–93a (Incorporated by reference at § 86.1).

(8) Credits generated for 2007 and later model year diesel engine families, or generated for 2008 and later model year Otto-cycle engine families are not discounted (except as specified in paragraph (m)(2) or (m)(3) of this section), and do not expire.

(9) For the purpose of using or generating credits during a phase-in of new standards, a manufacturer may elect to split an engine family into two subfamilies (e.g., one which uses credits

and one which generates credits). The manufacturer must indicate in the application for certification that the engine family is to be split, and may assign the numbers and configurations of engines within the respective subfamilies at any time prior to the submission of the end-of-year report required by § 86.001–23.

(i) Manufacturers certifying a split diesel engine family to both the Phase 1 and Phase 2 standards with equally sized subfamilies may exclude the engines within that split family from end-of-year NO_X (or NO_X+NMHC) ABT calculations, provided that neither subfamily generates credits for use by other engine families, or uses banked credits, or uses averaging credits from other engine families. All of the engines in that split family must be excluded from the phase-in calculations of § 86.007–11(g)(1) (both from the number of engines complying with the standards being phased-in and from the total number of U.S.-directed production engines.)

(ii) Manufacturers certifying a split Otto-cycle engine family to both the Phase 1 and Phase 2 standards with equally sized subfamilies may exclude the engines within that split family from end-of-year NO_X (or NO_X+NMHC) ABT calculations, provided that neither subfamily generates credits for use by other engine families, or uses banked credits, or uses averaging credits from other engine families. All of the engines in that split family must be excluded from the phase-in calculations of § 86.008–10(f)(1) (both from the number of engines complying with the standards being phased-in and from the total number of U.S.-directed production engines.)

(iii) Manufacturers certifying a split engine family may label all of the engines within that family with a single NO_X or NO_X+NMHC FEL. The FEL on the label will apply for all SEA or other compliance testing.

(iv) Notwithstanding the provisions of paragraph (m)(9)(iii) of this section, for split families, the NO_X FEL shall be used to determine applicability of the provisions of § 86.007–11(a)(3)(ii), (a)(4)(i)(B), and (h)(1), and § 86.008–10(g).

(10) For model years 2007 through 2009, to be consistent with the phase-in provisions of § 86.007–11(g)(1), credits generated from engines in one diesel engine service class (e.g., light-heavy duty diesel engines) may be used for averaging by engines in a different diesel engine service class, provided the credits are calculated for both engine families using the conversion factor and useful life of the engine family using the credits, and the engine family using the credits is certified to the standards listed in § 86.007–11(a)(1). Banked or traded credits may not be used by any engine family in a different service class than the service class of the engine family generating the credits.

[66 FR 5163, Jan. 18, 2001]

§ 86.007–21 Application for certification.

Section 86.007–21 includes text that specifies requirements that differ from § 86.004–21, 86.094–21 or 86.096–21. Where a paragraph in § 86.004–21, 86.094–21 or 86.096–21 is identical and applicable to § 86.007–21, this may be indicated by specifying the corresponding paragraph and the statement ''[Reserved]. For guidance see § 86.004–21.'', ''[Reserved]. For guidance see § 86.094–21.'', or ''[Reserved]. For guidance see § 86.096–21.''.

(a)–(b)(3) [Reserved]. For guidance see § 86.094–21.

(b)(4)(i) [Reserved]. For guidance see § 86.004–21.

(b)(4)(ii)–(b)(5)(iv) [Reserved]. For guidance see § 86.094–21.

(b)(5)(v)–(b)(6) [Reserved]. For guidance see § 86.004–21.

(b)(7) and (b)(8) [Reserved]. For guidance see § 86.094–21.

(b)(9) and (b)(10) [Reserved]. For guidance see § 86.004–21.

(c)–(j) [Reserved]. For guidance see § 86.094–21.

(k) and (l) [Reserved]. For guidance see § 86.096–21.

(m) and (n) [Reserved]. For guidance see § 86.004–21.

(o) For diesel heavy-duty engines, the manufacturer must provide the following additional information pertaining to the supplemental emission test conducted under § 86.1360–2007:

(1) Weighted brake-specific emissions data (*i.e.*, in units of g/bhp-hr), calculated according to 40 CFR 1065.650 for

all pollutants for which a brake-specific emission standard is established in this subpart;

(2) For engines subject to the MAEL (see § 86.007–11(a)(3)(ii)), brake specific gaseous emission data for each of the 12 non-idle test points (identified under § 86.1360–2007(b)(1)) and the 3 EPA-selected test points (identified under § 86.1360–2007(b)(2));

(3) For engines subject to the MAEL (see § 86.007–11(a)(3)(ii)), concentrations and mass flow rates of all regulated gaseous emissions plus carbon dioxide;

(4) Values of all emission-related engine control variables at each test point;

(5) A statement that the test results correspond to the test engine selection criteria in 40 CFR 1065.401. The manufacturer also must maintain records at the manufacturer's facility which contain all test data, engineering analyses, and other information which provides the basis for this statement, where such information exists. The manufacturer must provide such information to the Administrator upon request;

(6) For engines subject to the MAEL (see § 86.007–11(a)(3)(ii)), a statement that the engines will comply with the weighted average emissions standard and interpolated values comply with the Maximum Allowable Emission Limits specified in § 86.007–11(a)(3) for the useful life of the engine where applicable. The manufacturer also must maintain records at the manufacturer's facility which contain a detailed description of all test data, engineering analyses, and other information which provides the basis for this statement, where such information exists. The manufacturer must provide such information to the Administrator upon request.

(7) [Reserved]

(p)(1) The manufacturer must provide a statement in the application for certification that the diesel heavy-duty engine for which certification is being requested will comply with the applicable Not-To-Exceed Limits specified in § 86.007–11(a)(4) when operated under all conditions which may reasonably be expected to be encountered in normal vehicle operation and use. The manufacturer also must maintain records at the manufacturers facility which contain all test data, engineering analyses, and other information which provides the basis for this statement, where such information exists. The manufacturer must provide such information to the Administrator upon request.

(2) For engines equipped with exhaust gas recirculation, the manufacturer must provide a detailed description of the control system the engine will use to comply with the requirements of § 86.007–11(a)(4)(iii) and § 86.1370–2007(f) for NTE cold temperature operating exclusion, including but not limited to the method the manufacturer will use to access this exclusion during normal vehicle operation.

(3) For each engine model and/or horsepower rating within an engine family for which a manufacturer is applying for an NTE deficiency(ies) under the provisions of § 86.007–11(a)(4)(iv), the manufacturer's application for an NTE deficiency(ies) must include a complete description of the deficiency, including but not limited to: the specific description of the deficiency; what pollutant the deficiency is being applied for, all engineering efforts the manufacturer has made to overcome the deficiency, what specific operating conditions the deficiency is being requested for (i.e., temperature ranges, humidity ranges, altitude ranges, etc.), a full description of the auxiliary emission control device(s) which will be used to maintain emissions to the lowest practical level; and what the lowest practical emission level will be.

[65 FR 59954, Oct. 6, 2000, as amended at 70 FR 40433, July 13, 2005]

§ 86.007–23 Required data.

Section 86.007–23 includes text that specifies requirements that differ from § 86.095–23, § 86.098–23, or § 86.001–23. Where a paragraph in § 86.095–23, § 86.098–23, or § 86.001–23 is identical and applicable to § 86.007–23, this may be indicated by specifying the corresponding paragraph and the statement ''[Reserved]. For guidance see § 86.095–23.'', ''[Reserved]. For guidance see § 86.098–23.'', or ''[Reserved]. For guidance see § 86.001–23.''.

(a)–(b)(1) [Reserved]. For guidance see § 86.098–23.

(b)(2) [Reserved]. For guidance see § 86.001–23.

(b)(3) and (b)(4) [Reserved]. For guidance see § 86.098–23.

(c) *Emission data.*—(1) *Certification vehicles.* The manufacturer shall submit emission data (including, methane, methanol, formaldehyde, and hydrocarbon equivalent, as applicable) on such vehicles tested in accordance with applicable test procedures and in such numbers as specified. These data shall include zero-mile data, if generated, and emission data generated for certification as required under § 86.000–26(a)(3). In lieu of providing emission data the Administrator may, on request of the manufacturer, allow the manufacturer to demonstrate (on the basis of previous emission tests, development tests, or other information) that the engine will conform with certain applicable emission standards of this part. Standards eligible for such manufacturer requests are those for idle CO emissions, smoke emissions, or particulate emissions from methanol-fueled or gaseous-fueled diesel-cycle certification vehicles, those for particulate emissions from Otto-cycle certification vehicles or gaseous-fueled vehicles, and those for formaldehyde emissions from petroleum-fueled vehicles. Also eligible for such requests are standards for total hydrocarbon emissions from model year 1994 and later certification vehicles. By separate request, including appropriate supporting test data, the manufacturer may request that the Administrator also waive the requirement to measure particulate or formaldehyde emissions when conducting Selective Enforcement Audit testing of Otto-cycle vehicles.

(2) *Certification engines.* The manufacturer shall submit emission data on such engines tested in accordance with applicable emission test procedures of this subpart and in such numbers as specified. These data shall include zero-hour data, if generated, and emission data generated for certification as required under § 86.000–26(c)(4). In lieu of providing emission data on idle CO emissions or particulate emissions from methanol-fueled or gaseous-fueled diesel-cycle certification engines, on particulate emissions from Otto-cycle engines, or on CO emissions from diesel-cycle certification engines, the Administrator may, on request of the manufacturer, allow the manufacturer to demonstrate (on the basis of previous emission tests, development tests, or other information) that the engine will conform with the applicable emission standards of this part. In lieu of providing emission data on smoke emissions from methanol-fueled or petroleum-fueled diesel certification engines, the Administrator may, on the request of the manufacturer, allow the manufacturer to demonstrate (on the basis of previous emission tests, development tests, or other information) that the engine will conform with the applicable emissions standards of this part. In lieu of providing emissions data on smoke emissions from diesel-cycle engines when conducting Selective Enforcement Audit testing under subpart K of this part, the Administrator may, on separate request of the manufacturer, allow the manufacturer to demonstrate (on the basis of previous emission tests, development tests, or other information) that the engine will conform with the applicable smoke emissions standards of this part .

(d)–(e)(1) [Reserved]. For guidance see § 86.098–23.

(e)(2) and (e)(3) [Reserved]. For guidance see § 86.001–23.

(f)–(g) [Reserved]. For guidance see § 86.095–23.

(h)–(k) [Reserved]. For guidance see § 86.098–23.

(l) [Reserved]. For guidance see § 86.095–23.

(m) [Reserved]. For guidance see § 86.098–23.

[66 FR 5164, Jan. 18, 2001]

§ 86.007–25 Maintenance.

Section 86.007–25 includes text that specifies requirements that differ from § 86.094–25, § 86.098–25, or § 86.004–25. Where a paragraph in § 86.094–25, § 86.098–25, or § 86.004–25 is identical and applicable to § 86.007–25, this may be indicated by specifying the corresponding paragraph and the statement ''[Reserved]. For guidance see § 86.094–25.'', ''[Reserved]. For guidance see § 86.098–25.'', or ''[Reserved]. For guidance see § 86.004–25.''.

(a)–(a)(2) [Reserved]. For guidance see § 86.004–25.

(b) introductory text through (b)(3)(ii) [Reserved]. For guidance see § 86.094–25.

(b)(3)(iii)–(b)(3)(v)(H) [Reserved]. For guidance see § 86.004–25.

(b)(3)(vi)(A)–(b)(3)(vi)(D) [Reserved]. For guidance see § 86.094–25.

(b)(3)(vi)(E)–(b)(3)(vi)(J) [Reserved]. For guidance see § 86.098–25.

(b)(4) introductory text through (b)(4)(iii)(C) [Reserved]. For guidance see § 86.004–25.

(b)(4)(iii)(D) Particulate trap or trap oxidizer systems including related components (adjustment and cleaning only for filter element, replacement of the filter element is not allowed during the useful life).

(b)(4)(iii)(E) [Reserved]. For guidance see § 86.004–25.

(F) Catalytic converter (adjustment and cleaning only for catalyst beds, replacement of the bed is not allowed during the useful life).

(b)(4)(iii)(G)–(b)(6) [Reserved]. For guidance see § 86.004–25.

(b)(7)–(h) [Reserved]. For guidance see § 86.094–25.

(i) Notwithstanding the provisions of § 86.004–25(b)(4)(iii) introductory text through (b)(4)(iii)(C), paragraph (b)(4)(iii)(D) of this section, § 86.004–25(b)(4)(iii)(E), paragraph (b)(4)(iii)(F) of this section, § 86.004–25(b)(4)(iii)(G), and § 86.004–25(b)(6), manufacturers of heavy-duty engines may schedule replacement or repair of particulate trap (or trap oxidizer) systems or catalytic converters (including NO_X adsorbers), provided:

(1) The manufacturer demonstrates to the Administrator's satisfaction that the repair or replacement will be performed according to the schedule; and

(2) The manufacturer pays for the repair or replacement.

[66 FR 5164, Jan. 18, 2001]

§ 86.007–35 Labeling.

Section 86.007–35 includes text that specifies requirements that differ from § 86.095–35. Where a paragraph in § 86.095–35 is identical and applicable to § 86.007–35, this may be indicated by specifying the corresponding paragraph and the statement ''[Reserved]. For guidance see § 86.095–35.''.

(a) Introductory text through (a)(1)(iii)(L) [Reserved]. For guidance see § 86.095–35.

(a)(1)(iii)(M) [Reserved.]

(a)(1)(iii)(N)(*1*) For vehicles exempted from compliance with certain revised performance warranty procedures, as specified in § 86.096–21(j), a statement indicating the specific performance warranty test(s) of 40 CFR part 85, subpart W, not to be performed.

(*2*) For vehicles exempted from compliance with all revised performance warranty procedures, as specified in § 86.096–21(k), a statement indicating:

(*i*) That none of the performance warranty tests of 40 CFR part 85, subpart W, is to be performed; and

(*ii*) The name of the Administrator-approved alternative test procedure to be performed.

(2) Light-duty truck and heavy-duty vehicles optionally certified in accordance with the light-duty truck provisions.

(i) A legible, permanent label shall be affixed in a readily visible position in the engine compartment.

(ii) The label shall be affixed by the vehicle manufacturer who has been issued the certificate of conformity for such vehicle, in such a manner that it cannot be removed without destroying or defacing the label. The label shall not be affixed to any equipment which is easily detached from such vehicle.

(iii) The label shall contain the following information lettered in the English language in block letters and numerals, which shall be of a color that contrasts with the background of the label:

(A) The label heading: Important Vehicle Information;

(B) Full corporate name and trademark of the manufacturer;

(C) Engine displacement (in cubic inches or liters), engine family identification, and evaporative/refueling family;

(a)(2)(iii)(D)–(a)(2)(iii)(E) [Reserved]. For guidance see § 86.095–35.

(a)(2)(iii)(F) [Reserved]

(a)(2)(iii)(G)–(a)(2)(iii)(K) [Reserved]. For guidance see § 86.095–35.

(a)(2)(iii)(L) [Reserved]

(a)(2)(iii)(M)–(a)(2)(iii)(N) [Reserved]. For guidance see § 86.095–35.

(a)(2)(iii)(O)(1) For vehicles exempted from compliance with certain revised performance warranty procedures, as specified in § 86.096–21(j), a statement indicating the specific performance warranty test(s) of 40 CFR part 85, subpart W, not to be performed.

(*2*) For vehicles exempted from compliance with all revised performance warranty procedures, as specified in § 86.096–21(k), a statement indicating:

(*i*) That none of the performance warranty tests of 40 CFR part 85, subpart W, is to be performed, and

(*ii*) The name of the Administrator-approved alternative test procedure to be performed.

(a)(3) heading through (b) [Reserved]. For guidance see § 86.095–35.

(c) Vehicles powered by model year 2007 and later diesel-fueled engines must include permanent, readily visible labels on the dashboard (or instrument panel) and near all fuel inlets that state ''Use Ultra Low Sulfur Diesel Fuel Only''; or ''Ultra Low Sulfur Diesel Fuel Only''.

(d)–(i) [Reserved]. For guidance see § 86.095–35.

[66 FR 5165, Jan. 18, 2001, as amended at 69 FR 39212, June 29, 2004; 70 FR 40433, July 13, 2005]

§ 86.007–38 Maintenance instructions.

This section includes text that specifies requirements that differ from those specified in § 86.096–38 or § 86.004–38. Where a paragraph in § 86.096–38 or § 86.004–38 is identifical and applicable to § 86.007–38, this may be indicated by specifying the corresponding paragraph and the statement ''[Reserved]. For guidance *see* § 86.096–38., or [Reserved]. For guidance *see* § 86.004–38.''.

(a)–(f) [Reserved]. For guidance see § 86.004–38.

(g) [Reserved]. For guidance see § 86.096–38. For incorporation by reference see §§ 86.1 and 86.096–38.

(h) [Reserved]. For guidance see § 86.004–38.

(i) For each new diesel-fueled engine subject to the standards prescribed in § 86.007–11, as applicable, the manufacturer shall furnish or cause to be furnished to the ultimate purchaser a statement that ''This engine must be operated only with ultra low-sulfur diesel fuel (meeting EPA specifications for highway diesel fuel, including a 15 ppm sulfur cap).''

[66 FR 5165, Jan. 18, 2001, as amended at 68 FR 38455, June 27, 2003; 69 FR 39212, June 29, 2004]

§ 86.008–10 Emission standards for 2008 and later model year Otto-cycle heavy-duty engines and vehicles.

Section 86.008–10 includes text that specifies requirements that differ from § 86.099–10. Where a paragraph in § 86.099–10 is identical and applicable to § 86.008–10, this may be indicated by specifying the corresponding paragraph and the statement ''[Reserved]. For guidance see § 86.099–10.''.

(a)(1) Exhaust emissions from new 2008 and later model year Otto-cycle HDEs shall not exceed:

(i)(A) *Oxides of Nitrogen (NO_X).* 0.20 grams per brake horsepower-hour (0.075 grams per megajoule).

(B) A manufacturer may elect to include any or all of its Otto-cycle HDE families in any or all of the NO_X and NO_X plus NMHC emissions ABT programs for HDEs, within the restrictions described in § 86.008–15 or § 86.004–15. If the manufacturer elects to include engine families in any of these programs, the NO_X FEL may not exceed 0.50 grams per brake horsepower-hour (0.26 grams per megajoule). This ceiling value applies whether credits for the family are derived from averaging, banking, or trading programs. The NO_X FEL cap is 0.80 for model years before 2011 for manufacturers choosing to certify to the 1.5 g/bhp-hr NO_X+NMHC standard in 2003 or 2004, in accordance with § 86.005–10(f).

(ii)(A) *Non-methane Hydrocarbons (NMHC) for engines fueled with either gasoline, natural gas, or liquefied petroleum gas.* 0.14 grams per brake horsepower-hour (0.052grams per megajoule).

(B) *Non-methane Hydrocarbon Equivalent (NMHCE) for engines fueled with methanol.* 0.14 grams per brake horsepower-hour (0.052grams per megajoule).

(C) A manufacturer may elect to include any or all of its Otto-cycle HDE families in any or all of the NMHC emissions ABT programs for HDEs, within the restrictions described in

§ 86.008–15 or § 86.004–15. If the manufacturer elects to include engine families in any of these programs, the NMHC FEL may not exceed 0.30 grams per brake horsepower-hour. This ceiling value applies whether credits for the family are derived from averaging, banking, or trading programs. The NMHC FEL cap is 0.40 for model years before 2011 for manufacturers choosing to certify to the 1.5 g/bhp-hr NO_X+NMHC in 2004, as allowed in § 86.005–10.

(iii)(A) *Carbon monoxide.* 14.4 grams per brake horsepower-hour (5.36 grams per megajoule).

(B) *Idle Carbon Monoxide.* For all Otto-cycle HDEs utilizing aftertreatment technology, and not certified to the onboard diagnostics requirements of § 86.005–17: 0.50 percent of exhaust gas flow at curb idle.

(iv) *Particulate.* 0.01grams per brake horsepower-hour (0.0037grams per megajoule).

(2) The standards set forth in paragraph (a)(1) of this section refer to the exhaust emitted over the operating schedule set forth in paragraph (f)(1) of appendix I to this part, and measured and calculated in accordance with the procedures set forth in subpart N or P of this part.

(3)–(4) [Reserved]

(b) Evaporative emissions from heavy-duty vehicles shall not exceed the following standards. The standards apply equally to certification and in-use vehicles. The spitback standard also applies to newly assembled vehicles. For certification vehicles only, manufacturers may conduct testing to quantify a level of nonfuel background emissions for an individual test vehicle. Such a demonstration must include a description of the source(s) of emissions and an estimated decay rate. The demonstrated level of nonfuel background emissions may be subtracted from emission test results from certification vehicles if approved in advance by the Administrator.

(1) Hydrocarbons (for vehicles equipped with gasoline-fueled, natural gas-fueled or liquefied petroleum gas-fueled engines).

(i) For vehicles with a Gross Vehicle Weight Rating of up to 14,000 lbs:

(A)(*1*) For the full three-diurnal test sequence described in § 86.1230–96, diurnal plus hot soak measurements: 1.4 grams per test.

(*2*) For the supplemental two-diurnal test sequence described in § 86.1230–96, diurnal plus hot soak measurements (gasoline-fueled vehicles only): 1.75 grams per test.

(B) Running loss test (gasoline-fueled vehicles only): 0.05 grams per mile.

(C) Fuel dispensing spitback test (gasoline-fueled vehicles only): 1.0 grams per test.

(ii) For vehicles with a Gross Vehicle Weight Rating of greater than 14,000 lbs:

(A)(*1*) For the full three-diurnal test sequence described in § 86.1230–96, diurnal plus hot soak measurements: 1.9 grams per test.

(*2*) For the supplemental two-diurnal test sequence described in § 86.1230–96, diurnal plus hot soak measurements (gasoline-fueled vehicles only): 2.3 grams per test.

(B) Running loss test (gasoline-fueled vehicles only): 0.05 grams per mile.

(2) Total Hydrocarbon Equivalent (for vehicles equipped with methanol-fueled engines).

(i) For vehicles with a Gross Vehicle Weight Rating of up to 14,000 lbs:

(A)(*1*) For the full three-diurnal test sequence described in § 86.1230–96, diurnal plus hot soak measurements: 1.4 grams carbon per test.

(*2*) For the supplemental two-diurnal test sequence described in § 86.1230–96, diurnal plus hot soak measurements: 1.75 grams carbon per test.

(B) Running loss test: 0.05 grams carbon per mile.

(C) Fuel dispensing spitback test: 1.0 grams carbon per test.

(ii) For vehicles with a Gross Vehicle Weight Rating of greater than 14,000 lbs:

(A)(*1*) For the full three-diurnal test sequence described in § 86.1230–96, diurnal plus hot soak measurements: 1.9 grams carbon per test.

(*2*) For the supplemental two-diurnal test sequence described in § 86.1230–96, diurnal plus hot soak measurements: 2.3 grams carbon per test.

(B) Running loss test: 0.05 grams carbon per mile.

(3)(i) For vehicles with a Gross Vehicle Weight Rating of up to 26,000 lbs, the standards set forth in paragraphs (b)(1) and (b)(2) of this section refer to a composite sample of evaporative emissions collected under the conditions and measured in accordance with the procedures set forth in subpart M of this part.

(ii) For vehicles with a Gross Vehicle Weight Rating of greater than 26,000 lbs., the standards set forth in paragraphs (b)(1)(ii) and (b)(2)(ii) of this section refer to the manufacturer's engineering design evaluation using good engineering practice (a statement of which is required in § 86.098–23(b)(4)(ii)).

(4) All fuel vapor generated in a gasoline- or methanol-fueled heavy-duty vehicle during in-use operations shall be routed exclusively to the evaporative control system (e.g., either canister or engine purge). The only exception to this requirement shall be for emergencies.

(c) No crankcase emissions shall be discharged into the ambient atmosphere from any new 2008 or later model year Otto-cycle HDE.

(d) Every manufacturer of new motor vehicle engines subject to the standards prescribed in this section shall, prior to taking any of the actions specified in section 203(a)(1) of the Act, test or cause to be tested motor vehicle engines in accordance with applicable procedures in subpart N or P of this part to ascertain that such test engines meet the requirements of this section.

(e) [Reserved]. For guidance see § 86.099–10.

(f) Phase-in options. (1)(i) For model year 2008, manufacturers may certify some of their engine families to the exhaust standards applicable to model year 2007 engines under § 86.005–10, in lieu of the exhaust standards specified in this section. These engines must comply with all other requirements applicable to model year 2008 engines, except as allowed by paragraph (f)(1)(ii) of this section. The combined number of engines in the engine families certified to the 2007 combined NO_X plus NMHC standard may not exceed 50 percent of the manufacturer's U.S.-directed production of heavy-duty Otto-cycle motor vehicle engines for model year 2008, except as explicitly allowed by paragraph (f)(2) of this section.

(ii) For model year 2008, manufacturers may certify some of their engine families to the evaporative standards applicable to model year 2007 engines under § 86.005–10, in lieu of the standards specified in this section. These engines must comply with all other requirements applicable to model year 2008 engines, except as allowed by paragraph (f)(1)(i) of this section. The combined number of engines in the engine families certified to the 2007 standards may not exceed 50 percent of the manufacturer's U.S.-directed production of heavy-duty Otto-cycle motor vehicle engines for model year 2008.

(2)(i) Manufacturers certifying engines to all of the applicable exhaust standards listed in paragraph (a) of this section prior to model year 2008 (without using credits) may reduce the number of engines that are required to meet the NO_X and NMHC exhaust standards listed in paragraph (a) of this section in model year 2008 and/or 2009, taking into account the phase-in option provided in paragraph (f)(1) of this section. For every engine that is certified early, the manufacturer may reduce the number of engines that are required by paragraph (f)(1) of this section to meet the NO_X and NMHC standards listed in paragraph (a) of this section by one engine. For example, if a manufacturer produces 100 heavy-duty Otto-cycle engines in 2007 that meet all of the applicable standards listed in paragraph (a) of this section, and it produced 10,000 heavy-duty Otto-cycle engines in 2009, then only 9,900 of the engines would need to comply with the NO_X and NMHC standards listed in paragraph (a) of this section.

(ii) Manufacturers certifying engines to all of the applicable evaporative standards listed in paragraph (b) of this section prior to model year 2008 may reduce the number of engines that are required to meet the evaporative standards listed in paragraph (a) of this section in model year 2008 and/or 2009, taking into account the phase-in option provided in paragraph (f)(1) of this

section. For every engine that is certified early, the manufacturer may reduce the number of engines that are required by paragraph (f)(1) of this section to meet evaporative standards listed in paragraph (b) of this section by one engine.

(3) Manufacturers certifying engines to a voluntary NO_X standard of 0.10 g/bhp-hr (without using credits) in addition to all of the applicable standards listed in paragraphs (a) and (b) of this section prior to model year 2008 may reduce the number of engines that are required to meet the NO_X and NMHC standards listed in paragraph (a) of this section in model year 2008 and/or 2009, taking into account the phase-in option provided in paragraph (f)(1) of this section. For such every engine that is certified early, the manufacturer may reduce the number of engines that are required by paragraph (f)(1) of this section to meet the NO_X and NMHC standards listed in paragraph (a) of this section by two engines.

(g) For model years prior to 2012, for purposes of determining compliance after title or custody has transferred to the ultimate purchaser, for engines having a NO_X FEL no higher than 0.50 g/bhp-hr, the applicable compliance limits for NO_X and NMHC shall be determined by adding 0.10 g/bhp-hr to the otherwise applicable standards or FELs for NO_X and NMHC.

[66 FR 5165, Jan. 18, 2001]

§ 86.078–3 Abbreviations.

(a) The abbreviations in this section apply to this subpart and also to subparts B, D, H, I, J, N, O and P of this part and have the following meanings:

accel.—acceleration.
AECD—Auxiliary emission control device.
API—American Petroleum Institute.
ASTM—American Society for Testing and Materials.
BHP—Brake horsepower.
BSCO—Brake specific carbon monoxide.
BSHC—Brake specific hydrocarbons.
$BSNO_X$—Brake specific oxides of nitrogen.
C—Celsius.
cfh—cubic feet per hour.
CFV—Critical flow venturi.
CFV-CVS—Critical flow venturi—constant volume sampler.
CL—Chemiluminescence.
CO_2—carbon dioxide.
CO—Carbon monoxide.
conc.—concentration.
cfm—cubic feet per minute.
CT—Closed throttle.
cu. in.—cubic inch(es).
CVS—Constant volume sampler.
decel.—deceleration.
EP—End point.
evap.—evaporative.
F—Fahrenheit.
FID—Flame ionization detector.
FL—Full load.
ft.—feet.
g—gram(s).
gal.—U.S. gallon(s).
GVW—Gross vehicle weight.
GVWR—Gross vehicle weight rating.
h—hour(s).
H_2O—water.
HC—hydrocarbon(s).
HFID—Heated flame ionization detector.
Hg—mercury.
hi—high.
hp.—horsepower.
IBP—Initial boiling point.
ID—Internal diameter.
in.—inch(es).
K—kelvin.
kg—kilogram(s).
km—kilometer(s).
kPa—kilopascal(s).
lb.—pound(s).
lb.-ft.—pound-feet.
m—meter(s).
max.—maximum.
mg—milligram(s).
mi.—mile(s).
min.—minute(s).
ml—milliliter(s).
mm—millimeter(s).
mph—miles per hour.
mv—millivolt(s).
N_2—nitrogen.
NDIR—Nondispersive infrared.
NO—nitric oxide.
NO_2—nitrogen dioxide.
NO_X—oxides of nitrogen.
No.—Number.
O_2—oxygen.
Pb—lead.
pct.—percent.
PDP-CVS—Positive displacement pump—constant volume sampler.
ppm—parts per million by volume.
ppm C—parts per million, carbon.
psi—pounds per square inch.
psig—pounds per square inch gauge.
PTA—Part throttle acceleration.
PTD—Part throttle deceleration.
R—Rankin.
rpm—revolutions per minute.
RVP—Reid vapor pressure.
s—second(s).
SAE—Society of Automotive Engineers.
SI—International system of units.
sp.—speed.
TEL—Tetraethyl lead.
TML—Tetramethyl lead.

UDDS—Urban dynamometer driving schedule.
V—volt(s).
vs—versus.
W—watt(s).
WF—Weighting factor.
WOT—Wide open throttle.
wt.—weight.
′—feet.
″—inch(es).
°—degree(s).
Σ—summation.

[42 FR 32907, June 28, 1977, as amended at 45 FR 4149, Jan. 21, 1980]

§ 86.078–6 Hearings on certification.

(a)(1) After granting a request for a hearing under § 86.084–22, § 86.084–30(b), or § 86.084–30(c), the Administrator shall designate a Presiding Officer for the hearing.

(2) The General Counsel will represent the Environmental Protection Agency in any hearing under this section.

(3) If a time and place for the hearing have not been fixed by the Administrator under § 86.084.22, § 86.084–30(b), or § 86.084–30(c), the hearing shall be held as soon as practicable at a time and place fixed by the Administrator or by the Presiding Officer.

(4) In the case of any hearing requested pursuant to § 86.078–30(c)(5)(i), the Administrator may in his discretion direct that all argument and presentation of evidence be concluded within such fixed period not less than 30 days as he may establish from the date that the first written offer of a hearing is made to the manufacturer. To expedite proceedings, the Administrator may direct that the decision of the Presiding Officer (who may, but need not be the Administrator himself) shall be the final EPA decision.

(b)(1) Upon his appointment pursuant to paragraph (a) of this section, the Presiding Officer will establish a hearing file. The file shall consist of the notice issued by the Administrator under § 86.084–22, § 86.084–30(b), or § 86.084–30(c) together with any accompanying material, the request for a hearing and the supporting data submitted therewith, and all documents relating to the request for certification and all documents submitted therewith, and correspondence and other data material to the hearing.

(2) The hearing file will be available for inspection by the applicant at the office of the Presiding Officer.

(c) An applicant may appear in person, or may be represented by counsel or by any other duly authorized representative.

(d)(1) The Presiding Officer upon the request of any party, or in his discretion, may arrange for a prehearing conference at a time and place specified by him to consider the following:

(i) Simplification of the issues;

(ii) Stipulations, admissions of fact, and the introduction of documents;

(iii) Limitation of the number of expert witnesses;

(iv) Possibility of agreement disposing of all or any of the issues in dispute;

(v) Such other matters as may aid in the disposition of the hearing, including such additional tests as may be agreed upon by the parties.

(2) The results of the conference shall be reduced to writing by the Presiding Officer and made part of the record.

(e)(1) Hearings shall be conducted by the Presiding Officer in an informal but orderly and expeditious manner. The parties may offer oral or written evidence, subject to the exclusion by the Presiding Officer of irrelevant, immaterial and repetitious evidence.

(2) Witnesses will not be required to testify under oath. However, the Presiding Officer shall call to the attention of witnesses that their statements may be subject to the provisions of title 18 U.S.C. 1001 which imposes penalties for knowingly making false statements or representations, or using false documents in any matter within the jurisdiction of any department or agency of the United States.

(3) Any witness may be examined or cross-examined by the Presiding Officer, the parties, or their representatives.

(4) Hearings shall be reported verbatim. Copies of transcripts of proceedings may be purchased by the applicant from the reporter.

(5) All written statements, charts, tabulations, and similar data offered in evidence at the hearings shall, upon a showing satisfactory to the Presiding Officer of their authenticity, relevancy, and materiality, be received in

evidence and shall constitute a part of the record.

(6) Oral argument may be permitted in the discretion of the Presiding Officer and shall be reported as part of the record unless otherwise ordered by him.

(f)(1) The Presiding Officer shall make an initial decision which shall include written findings and conclusions and the reasons or basis therefor on all the material issues of fact, law, or discretion presented on the record. The findings, conclusions, and written decision shall be provided to the parties and made a part of the record. The initial decision shall become the decision of the Administrator without further proceedings unless there is an appeal to the Administrator or motion for review by the Administrator within 20 days of the date the initial decision was filed.

(2) On appeal from or review of the initial decision the Administrator shall have all the powers which he would have in making the initial decision including the discretion to require or allow briefs, oral argument, the taking of additional evidence or the remanding to the Presiding Officer for additional proceedings. The decision by the Administrator shall include written findings and conclusions and the reasons or basis therefor on all the material issues of fact, law, or discretion presented on the appeal or considered in the review.

[42 FR 32907, June 28, 1977, as amended at 49 FR 48479, Dec. 12, 1984]

§ 86.079–31 Separate certification.

Where possible a manufacturer should include in a single application for certification all vehicles (or engines) for which certification is required. A manufacturer may, however, choose to apply separately for certification of part of his product line. The selection of test vehicles (or test engines) and the computation of test results will be determined separately for each application.

[42 FR 45149, Sept. 8, 1977]

§ 86.079–32 Addition of a vehicle or engine after certification.

(a) If a manufacturer proposes to add to his product line a vehicle (or engine) of the same engine-system combination as vehicles (or engines) previously certified but which was not described in the application for certification when the test vehicle(s) (or test engine(s)) representing other vehicles (or engines) of that combination was certified, he shall notify the Administrator. Such notification shall be in advance of the addition unless the manufacturer elects to follow the procedure described in § 86.079–34. This notification shall include a full description of the vehicle (or engine) to be added.

(b) The Administrator may require the manufacturer to perform such tests on the test vehicle(s) (or test engine(s)) representing the vehicle (or engine) to be added which would have been required if the vehicle (or engine) had been included in the original application for certification.

(c) If, after a review of the test reports and data submitted by the manufacturer, and data derived from any testing conducted under § 86.079–29, the Administrator determines that the test vehicle(s) or test engine(s) meets all applicable standards, the appropriate certificate will be amended accordingly. If the Administrator determines that the test vehicle(s) (or test engine(s)) does not meet applicable standards, he will proceed under § 86.079–30(b).

[42 FR 45149, Sept. 8, 1977]

§ 86.079–33 Changes to a vehicle or engine covered by certification.

(a) The manufacturer shall notify the Administrator of any change in production vehicles (or production engines) in respect to any of the parameters listed in § 86.079–24(a)(3), § 86.079–24(b)(1)(iii), § 86.079–24(b)(2) (iii) or § 86.079–24(b)(3)(iii) as applicable, giving a full description of the change. Such notification shall be in advance of the change unless the manufacturer elects to follow the procedure described in § 86.079–34.

(b) Based upon the description of the change, and data derived from such

testing as the Administrator may require or conduct. The Administrator will determine whether the vehicle (or engine), as modified, would still be covered by the certificate of conformity then in effect.

(c) If the Administrator determines that the outstanding certificate would cover the modified vehicles (or engines) he will notify the manufacturer in writing. Except as provided in § 86.079–34 the change may not be put into effect prior to the manufacturer's receiving this notification. If the Administrator determines that the modified vehicles (or engines) would not be covered by the certificate then in effect, the modified vehicles (or engines) shall be treated as additions to the product line subject to § 86.079–32.

[42 FR 45149, Sept. 8, 1977]

§ 86.079–36 Submission of vehicle identification numbers.

(a) Upon request of the Administrator, the manufacturer of any light-duty vehicle or light-duty truck covered by a certificate of conformity shall, within 30 days, identify by vehicle identification number, the vehicle(s) covered by the certificate of conformity.

(b) The manufacturer of any light-duty vehicle or light-duty truck covered by a certificate of conformity shall provide to the Administrator, within 60 days of the issuance of a certificate of conformity, an explanation of the elements in any vehicle identification coding system in sufficient detail to enable the Administrator to identify those vehicles which are covered by a certificate of conformity.

[43 FR 52920, Nov. 14, 1978]

§ 86.079–39 Submission of maintenance instructions.

(a) The manufacturer shall provide to the Administrator, no later than the time of the submission required by § 86.079–23, a copy of the maintenance instructions which the manufacturer proposes to supply to the ultimate purchaser in accordance with § 86.079–38(a). The Administrator will review such instructions to determine whether they are reasonable and necessary to assure the proper functioning of the vehicle's (or engine's) emission control systems. The Administrator will notify the manufacturer of his determination whether such instructions are reasonable and necessary to assure the proper functioning of the emission control systems.

(b) Any revision to the maintenance instructions which will affect emissions shall be supplied to the Administrator at least 30 days before being supplied to the ultimate purchaser unless the Administrator consents to a lesser period of time.

[42 FR 45151, Sept. 8, 1977]

§ 86.080–12 Alternative certification procedures.

(a)(1) The Administrator will determine which of the following certification procedures (paragraph (a)(3) or (a)(4) of this section) may be used to demonstrate compliance for each heavy-duty engine, light-duty vehicle, and light-duty truck engine family for which certification is sought.

(2) The families selected for the procedure described in paragraph (a)(3) of this section will be subject to this procedure at the option of the manufacturer.

(3) The following provisions apply to those heavy-duty engine, light-duty vehicle, and light-duty truck engine families which the Administrator has specified may be subject to the abbreviated certification review procedure.

(i) The manufacturer shall satisfy all applicable requirements of part 86 necessary to demonstrate compliance with the applicable standards for each class of new motor vehicles or new motor vehicle engines for which certification is sought.

(ii) As specifically allowed by the Administrator, the manufacturer shall assume the responsibility for part or all of the decisions applicable to the family for which certification is sought and which are within the jurisdiction of the Administrator, with the exception that the Administrator will determine whether a test vehicle, or test engine, has met the applicable emission standards.

(iii) The manufacturer shall maintain, update, and correct all records and information required.

(iv) The Administrator may review a manufacturer's records at any time. At the Administrator's discretion, this review may take place either at the manufacturer's facility or at another facility designated by the Administrator.

(v) At the Administrator's request, the manufacturer shall notify the Administrator of the status of the certification program including projected schedules of those significant accomplishments specified by the Administrator.

(vi) The manufacturer shall permit the Administrator to inspect any facilities, records, and vehicles from which data are obtained under the abbreviated certification review procedure.

(vii) Upon completing all applicable requirements of part 86, the manufacturer shall submit a separate application for a certificate of conformity for each set of standards and each class of new motor vehicles or new motor vehicle engines for which certification is sought. Such application shall be made in writing to the Administrator by the manufacturer.

(A) The Administrator may approve or disapprove, in whole or in part, an application for certification according to the procedures specified in § 86.080–22(b).

(B) If, after a review of the application for certification, test reports and data submitted by the manufacturer, data obtained during an inspection, and any other pertinent data or information, the Administrator determines that a test vehicle(s) or test engine(s) has not met the requirements of the Act and the applicable subpart, he will notify the manufacturer in writing and set forth the reason(s) for the determination as specified in § 86.080–22(c).

(4) Those families which are to be subjected to the complete EPA review procedure will follow the procedures specified in this subpart with the exception of § 86.080–12(a)(3).

(b) The manufacturer may request that an engine family be subject to the abbreviated certification review procedure.

(c) The Administrator may require that an engine family previously allowed to be subject to the abbreviated certification review procedure be transferred to the complete review procedure.

[45 FR 26045, Apr. 17, 1980]

§ 86.082–2 Definitions.

(a) The definitions of this section apply to this subpart and also to subparts B, D, I, and R of this part.

(b) As used in this subpart, all terms not defined herein shall have the meaning given them in the Act:

Accuracy means the difference between a measurement and true value.

Act means part A of title II of the Clean Air Act, 42 U.S.C. as amended, 7521, *et seq*.

Administrator means the Administrator of the Environmental Protection Agency or his authorized representative.

Auxiliary Emission Control Device (AECD) means any element of design which senses temperature, vehicle speed, engine RPM, transmission gear, manifold vacuum, or any other parameter for the purpose of activating, modulating, delaying, or deactivating the operation of any part of the emission control system.

Basic engine means a unique combination of manufacturer, engine displacement, number of cylinders, fuel system (as distinguished by number of carburetor barrels or use of fuel injection), catalyst usage, and other engine and emission control system characteristics specified by the Administrator.

Basic vehicle frontal area means the area enclosed by the geometric projection of the basic vehicle along the longitudinal axis, which includes tires but excludes mirrors and air deflectors, onto a plane perpendicular to the longitudinal axis of the vehicle.

Body style means a level of commonality in vehicle construction as defined by number of doors and roof treatment (e.g., sedan, convertible, fastback, hatchback).

Body type means a name denoting a group of vehicles that are either in the same car line or in different car lines provided the only reason the vehicles qualify to be considered in different car lines is that they are produced by a separate division of a single manufacturer.

Calibrating gas means a gas of known concentration which is used to establish the response curve of an analyzer.

Calibration means the set of specifications, including tolerances, unique to a particular design, version, or application of a component or components assembly capable of functionally describing its operation over its working range.

Car line means a name denoting a group of vehicles within a make or car division which has a degree of commonality in construction (e.g., body, chassis). Car line does not consider any level of decor or opulence and is not generally distinguished by characteristics as roofline, number of doors, seats, or windows except for station wagons or light-duty trucks. Station wagons and light-duty trucks are considered to be different car lines than passenger cars.

Configuration means a subclassification of an engine-system combination on the basis of engine code, inertia weight class, transmission type and gear ratios, final drive ratio, and other parameters which may be designated by the Administrator.

Crankcase emissions means airborne substances emitted to the atmosphere from any portion of the engine crankcase ventilation or lubrication systems.

Curb-idle for manual transmission code heavy-duty engines means the manufacturer's recommended engine speed with the transmission in neutral or with the clutch disengaged. For automatic transmission code heavy-duty engines, curb-idle means the manufacturer's recommended engine speed with the automatic transmission in gear and the output shaft stalled.

Defeat Device means an AECD that reduces the effectiveness of the emission control system under conditions which may reasonably be expected to be encountered in normal urban vehicle operation and use, unless (1) such conditions are substantially included in the Federal emission test procedure, (2) the need for the AECD is justified in terms of protecting the vehicle against damage or accident, or (3) the AECD does not go beyond the requirements of engine starting.

Diurnal breathing losses means evaporative emissions as a result of the daily range in temperature.

Drive train configuration means a unique combination of engine code, transmission configuration, and axle ratio.

Dynamometer-idle for automatic transmission code heavy-duty engines means the manufacturer's recommended engine speed without a transmission that simulates the recommended engine speed with a transmission and with the transmission in neutral.

Engine code means a unique combination, within an engine-system combination, of displacement, carburetor (or fuel injection) calibration, choke calibration, distributor calibration, auxiliary emission control devices, and other engine and emission control system components specified by the Administrator.

Engine family means the basic classification unit of a manufacturer's product line used for the purpose of test fleet selection and determined in accordance with § 86.082–24.

Engine family group means a combination of engine families for the purpose of determining a minimum deterioration factor under the Alternative Durability Program.

Engine-system combination means an engine family-exhaust emission control system combination.

EPA Enforcement Officer means any officer or employee of the Environmental Protection Agency so designated in writing by the Administrator (or by his designee).

Evaporative emission code means a unique combination, in an evaporative emission family-evaporative emission control system combination, of purge system calibrations, fuel tank and carburetor bowl vent calibrations and other fuel system and evaporative emission control system components and calibrations specified by the Administrator.

Evaporative emissions means hydrocarbons emitted into the atmosphere from a motor vehicle, other than exhaust and crankcase emissions.

Evaporative vehicle configuration means a unique combination of basic

engine, engine code, body type, and evaporative emission code.

Exhaust emissions means substances emitted to the atmosphere from any opening downstream from the exhaust port of a motor vehicle engine.

Fuel evaporative emissions means vaporized fuel emitted into the atmosphere from the fuel system of a motor vehicle.

Fuel system means the combination of fuel tank(s), fuel pump, fuel lines, and carburetor or fuel injection components, and includes all fuel system vents and fuel evaporative emission control system components.

Gross vehicle weight means the manufacturer's gross weight rating for the individual vehicle.

Gross vehicle weight rating (GVWR) means the value specified by the manufacturer as the maximum design loaded weight of a single vehicle.

Hang-up refers to the process of hydrocarbon molecules being adsorbed, condensed, or by any other method removed from the sample flow prior to reaching the instrument detector. It also refers to any subsequent desorption of the molecules into the sample flow when they are assumed to be absent.

Heavy-duty engine means any engine which the engine manufacturer could reasonably expect to be used for motive power in a heavy-duty vehicle.

Heavy-duty vehicle means any motor vehicle rated at more than 8,500 pounds GVWR or that has a vehicle curb weight of more than 6,000 pounds or that has a basic vehicle frontal area in excess of 45 square feet.

High altitude means any elevation over 1,219 meters (4,000 feet).

High-altitude conditions means a test altitude of 1,620 meters (5,315 feet), plus or minus 100 meters (328 feet), or equivalent observed barometric test conditions of 83.3 ±1 kilopascals.

High-altitude reference point means an elevation of 1,620 meters (5,315 feet) plus or minus 100 meters (328 feet), or equivalent observed barometric test conditions of 83.3 kPa (24.2 inches Hg), plus or minus 1 kPa (0.30 Hg).

Hot-soak losses means evaporative emissions after termination of engine operation.

Incomplete truck means any truck which does not have the primary load carrying device or container attached.

Inertia weight class means the class, which is a group of test weights, into which a vehicle is grouped based on its loaded vehicle weight in accordance with the provisions of part 86.

Intermediate speed means peak torque speed if peak torque speed occurs between 60 and 75 percent of rated speed. If the peak torque speed is less than 60 percent of rated speed, intermediate speed means 60 percent of rated speed. If the peak torque speed is greater than 75 percent of rated speed, intermediate speed means 75 percent of rated speed.

Light-duty truck means any motor vehicle rated at 8,500 pounds GVWR or less which as a vehicle curb weight of 6,000 pounds or less and which has a basic vehicle frontal area of 45 square feet or less, which is:

(1) Designed primarily for purposes of transportation of property or is a derivation of such a vehicle, or

(2) Designed primarily for transportation of persons and has a capacity of more than 12 persons, or

(3) Available with special features enabling off-street or off-highway operation and use.

Light-duty vehicle means a passenger car or passenger car derivative capable of seating 12 passengers or less.

Loaded vehicle weight means the vehicle curb weight plus 300 pounds.

Low altitude means any elevation equal to or less than 1,219 meters (4,000 feet).

Low altitude conditions means a test altitude less than 549 meters (1,800 feet).

Malfunction means not operating according to specifications (e.g., those specifications listed in the application for certification).

Maximum rated horsepower means the maximum brake horsepower output of an engine as stated by the manufacturer in his sales and service literature and his application for certification under § 86.082–21.

Maximum rated torque means the maximum torque produced by an engine as stated by the manufacturer in his sales and service literature and his application for certification under § 86.082–21.

Military engine means any engine manufactured solely for the Department of Defense to meet military specifications.

Model means a specific combination of car line, body style, and drivetrain configuration.

Model type means a unique combination of car line, basic engine, and transmission class.

Model year means the manufacturer's annual production period (as determined by the Administrator) which includes January 1 of such calendar year: *Provided,* That if the manufacturer has no annual production period, the term *model year* shall mean the calendar year.

Nominal fuel tank capacity means the volume of the fuel tank(s), specified by the manufacturer to the nearest tenth of a U.S. gallon, which may be filled with fuel from the fuel tank filler inlet.

Opacity means the fraction of a beam of light, expressed in percent, which fails to penetrate a plume of smoke.

Option means any available equipment or feature not standard equipment on a model.

Oxides of nitrogen means the sum of the nitric oxide and nitrogen dioxide contained in a gas sample as if the nitric oxide were in the form of nitrogen dioxide.

Peak torque speed means the speed at which an engine develops maximum torque.

Percent load means the fraction of the maximum available torque at a specified engine speed.

Precision means the standard deviation of replicated measurements.

Rated speed means the speed at which the manufacturer specifies the maximum rated horsepower of an engine.

Reconfigured emission-data vehicle means an emission-data vehicle obtained by modifying a previously used emission-data vehicle to represent another emission-data vehicle.

Running loss means fuel evaporative emissions resulting from an average trip in an urban area or the simulation of such a trip.

Scheduled maintenance means any adjustment, repair, removal, disassembly, cleaning, or replacement of vehicle components or systems which is performed on a periodic basis to prevent part failure or vehicle (if the engine were installed in a vehicle) malfunction.

Smoke means the matter in the exhaust emission which obscures the transmission of light.

Span gas means a gas of known concentration which is used routinely to set the output level of an analyzer.

Standard equipment means those features or equipment which are marketed on a vehicle over which the purchaser can exercise no choice.

System includes any motor vehicle engine modification which controls or causes the reduction of substances emitted from motor vehicles.

Tank fuel volume means the volume of fuel in the fuel tank(s), which is determined by taking the manufacturer's nominal fuel tank(s) capacity and multiplying by 0.40, the result being rounded using ASTM E 29–67 to the nearest tenth of a U.S. gallon.

Test weight means the weight, within an inertia weight class, which is used in the dynamometer testing of a vehicle, and which is based on its loaded vehicle weight in accordance with the provisions of part 86.

Throttle means the mechanical linkage which either directly or indirectly controls the fuel flow to the engine.

Transmission class means the basic type of transmission, e.g., manual, automatic, semiautomatic.

Transmission configuration means a unique combination, within a transmission class, of the number of the forward gears and, if applicable, overdrive. The Administrator may further subdivide a transmission configuration (based on such criteria as gear ratios, torque convertor multiplication ratio, stall speed and shift calibration, etc.), if he determines that significant fuel economy or exhaust emission differences exist within that transmission configuration.

Unscheduled maintenance means any adjustment, repair, removal, disassembly, cleaning, or replacement of vehicle components or systems which is performed to correct a part failure or vehicle (if the engine were installed in a vehicle) malfunction.

Useful life means:

(1) For light-duty vehicles and light-duty trucks a period of use of 5 years or 50,000 miles, whichever first occurs.

(2) For gasoline-fueled heavy-duty engines a period of use of 5 years or 50,000 miles of vehicle operation or 1,500 hours of engine operation (or an equivalent period of 1,500 hours of dynamometer operation), whichever first occurs.

(3) For diesel heavy-duty engines a period of use of 5 years or 100,000 miles of vehicle operation or 3,000 hours of engine operation (or an equivalent period of 1,000 hours of dynamometer operation), whichever first occurs.

Van means a light-duty truck having an integral enclosure, fully enclosing the driver compartment and load carrying device, and having no body sections protruding more than 30 inches ahead of the leading edge of the windshield.

Vehicle configuration means a unique combination of basic engine, engine code, inertia weight class, transmission configuration, and axle ratio.

Vehicle curb weight means the actual or the manufacturer's estimated weight of the vehicle in operational status with all standard equipment, and weight of fuel at nominal tank capacity, and the weight of optional equipment computed in accordance with § 86.082–24; incomplete light-duty trucks shall have the curb weight specified by the manufacturer.

Zero (0) hours means that point after normal assembly line operations and adjustments are completed and before ten (10) additional operating hours have been accumulated, including emission testing, if performed.

Zero (0) miles means that point after initial engine starting (not to exceed 100 miles of vehicle operation, or three hours of engine operation) at which normal assembly line operations and adjustments are completed, and including emission testing, if performed.

[46 FR 50475, Oct. 13, 1981, and 47 FR 49807, 49808, Nov. 2, 1982; 62 FR 31233, June 6, 1997]

§ 86.082–34 Alternative procedure for notification of additions and changes.

(a) A manufacturer may, in lieu of notifying the Administrator in advance of an addition of a vehicle (or engine) under § 86.079–32 or a change in a vehicle (or engine) under § 86.079–33, notify the Administrator concurrently with making an addition of a vehicle or a change in a vehicle, if the manufacturer determines that following the change all vehicles (or engines) effected by the addition or change will still meet the applicable emission standards. Such notification shall include a full description of the addition or change and any supporting documentation the manufacturer may desire to include to support the manufacturer's determination. The manufacturer's determination that the addition or change does not cause noncompliance shall be based on an engineering evaluation of the addition or change and/or testing.

(b) The Administrator may require that additional emission testing be performed to support the manufacturers original determination submitted in paragraph (a) of this section. If additional testing is required the Administrator shall proceed as in § 86.079–32 (b) and (c) or § 86.079–33 (b) and (c) as appropriate. Additional test data, if requested, must be provided within 30 days of the request or the manufacturer must rescind the addition or change immediately. The Administrator may grant additional time to complete testing. If based on this additional testing or any other information, the Administrator determines that the vehicles effected by the addition or change do not meet the applicable standards the Administrator will notify the manufacturer to rescind the addition or change immediately upon receipt of the notification.

(c) Election to produce vehicles (or engines) under this section will be deemed to be a consent to recall all vehicles (or engines) which the Administrator determines under § 86.079–32(c) do not meet applicable standards, and to cause such nonconformity to be remedied at no expense to the owner.

[46 FR 50486, Oct. 13, 1981, and 47 FR 49807, Nov. 2, 1982]

§ 86.084–2 Definitions.

The definitions in § 86.082–2 remain effective. The definitions listed in this section apply beginning with the 1984 model year.

Approach angle means the smallest angle in a plan side view of an automobile, formed by the level surface on which the automobile is standing and a line tangent to the front tire static loaded radius arc and touching the underside of the automobile forward of the front tire.

Axle clearance means the vertical distance from the level surface on which an automobile is standing to the lowest point on the axle differential of the automobile.

Breakover angle means the supplement of the largest angle, in the plan side view of an automobile, that can be formed by two lines tangent to the front and rear static loaded radii arcs and intersecting at a point on the underside of the automobile.

Curb-idle means:

(1) For manual transmission code light-duty trucks, the engine speed with the transmission in neutral or with the clutch disengaged and with the air conditioning system, if present, turned off. For automatic transmission code light-duty trucks, curb-idle means the engine speed with the automatic transmission in the Park position (or Neutral position if there is no Park position), and with the air conditioning system, if present, turned off.

(2) For manual transmission code heavy-duty engines, the manufacturer's recommended engine speed with the clutch disengaged. For automatic transmission code heavy-duty engines, curb idle means the manufacturer's recommended engine speed with the automatic transmission in gear and the output shaft stalled. (Measured idle speed may be used in lieu of curb-idle speed for the emission tests when the difference between measured idle speed and curb idle speed is sufficient to cause a void test under 40 CFR 1065.530 but not sufficient to permit adjustment in accordance with 40 CFR part 1065, subpart E.

Departure angle means the smallest angle, in a plan side view of an automobile, formed by the level surface on which the automobile is standing and a line tangent to the rear tire static loaded radius arc and touching the underside of the automobile rearward of the rear tire.

Emission-related maintenance means that maintenance which does substantially affect emissions or which is likely to affect the deterioration of the vehicle or engine with respect to emissions, even if the maintenance is performed at some time other than that which is recommended.

Heavy-passenger cars means, for the 1984 model year only, a passenger car or passenger car derivative capable of seating 12 passengers or less, rated at 6,000 pounds GVW or more and having an equivalent test weight of 5,000 pounds or more.

Non-emission related maintenance means that maintenance which does not substantially affect emissions and which does not have a lasting effect on the deterioration of the vehicle or engine with respect to emissions once the maintenance is performed at any particular date.

Scheduled maintenance means any adjustment, repair, removal, disassembly, cleaning, or replacement of vehicle components or systems which is performed on a periodic basis to prevent part failure or vehicle (if the engine were installed in a vehicle) malfunction, or anticipated as necessary to correct an overt indication of vehicle malfunction or failure for which periodic maintenance is not appropriate.

Special features enabling off-street or off-highway operation and use means a vehicle:

(1) That has 4-wheel drive; and

(2) That has at least four of the following characteristics calculated when the automobile is at curb weight, on a level surface, with the front wheels parallel to the vehicle's longitudinal centerline, and the tires inflated to the manufacturer's recommended pressure;

(i) Approach angle of not less than 28 degrees.

(ii) Breakover angle of not less than 14 degrees.

(iii) Departure angle of not less than 20 degrees.

(iv) Running clearance of not less than 8 inches.

(v) Front and rear axle clearances of not less than 7 inches each.

Static loaded radius arc means a portion of a circle whose center is the center of a standard tire-rim combination of an automobile and whose radius is

the distance from that center to the level surface on which the automobile is standing, measured with the automobile at curb weight, the wheel parallel to the vehicle's longitudinal centerline, and the tire inflated to the manufacturer's recommended pressure.

Unscheduled maintenance means any adjustment, repair, removal disassembly, cleaning, or replacement of vehicle components or systems which is performed to correct a part failure or vehicle (if the engine were installed in a vehicle) malfunction which was not anticipated.

Useful life means:

(a) For light-duty vehicles a period of use of 5 years or 50,000 miles, whichever first occurs.

(b)(1) For a light-duty truck engine family or heavy-duty engine family, the average period of use up to engine retirement or rebuild, whichever occurs first, as determined by the manufacturer under § 86.084–21(b)(4)(ii)(B).

(2) For a specific light-duty truck or heavy-duty engine, the period of use represented by the first occurring of the following:

(i) The engine reaches the point of needing to be rebuilt, according to the criteria established by the manufacturer under § 86.084–21(b)(4)(ii)(C), or

(ii) The engine reaches its engine family's useful life.

(3) If the useful life of a specific light-duty truck or heavy-duty engine is found to be less than 5 years or 50,000 miles (or the equivalent), the useful life shall be a period of use of 5 years or 50,000 miles (or the equivalent), whichever occurs first, as required by section 202(d)(2) of the Act.

(4) For purpose of identification this option shall be known as the average useful-life period.

(c)(1) As an option for a light-duty truck engine family, a period of use of 12 years or 130,000 miles, whichever occurs first.

(2) As an option for a gasoline heavy-duty engine family, a period of use of 10 years or 120,000 miles, whichever occurs first.

(3) As an option for a diesel heavy-duty engine family, a period of use of 10 years or 120,000 miles, whichever occurs first, for engines certified for use in vehicles of less than 19,500 pounds GVWR; a period of use of 10 years or 200,000 miles, whichever occurs first, for engines certified for use in vehicles of 19,501–26,000 pounds GVWR; or, a period of use of 10 years or 275,000 miles, whichever occurs first, for engines certified for use in vehicles whose GVWR exceeds 26,000 pounds.

(4) As an option for both light-duty truck and heavy-duty engine families, an alternate full-life value assigned by the Administrator under § 86.084–21(b)(4)(ii)(B)(*4*).

(5) For purpose of identification these options shall be known as the assigned useful-life period options.

(6) For those light-duty truck and heavy-duty engine families using the assigned useful-life period options, the warranty period for emissions defect warranty and emissions performance warranty shall be 5 years/50,000 miles for light-duty trucks, 5 years/50,000 miles for gasoline heavy-duty engines and for diesel heavy-duty engines certified for use in vehicle of less than 19,501 lbs. GVWR, and 5 years/100,000 miles for all other diesel heavy-duty engines. However, in no case may this period be less than the basic mechanical warranty period.

(7) The assigned useful-life period options, as detailed in paragraphs (c)(1) through (c)(6) of this section, are applicable for the 1984 model year only.

(d)(1) As an option for the 1984 model year and for the 1984 model year only, the useful life of light-duty trucks and heavy-duty engine families may be defined as prescribed in § 86.077–2.

(2) For purpose of identification this option shall be known as the half-life useful-life option.

[45 FR 63747, Sept. 25, 1980, as amended at 47 FR 49811, Nov. 2, 1982; 48 FR 1412, Jan. 12, 1983; 48 FR 48607, Oct. 19, 1983; 49 FR 48136, Dec. 10, 1984; 70 FR 40433, July 13, 2005]

§ 86.084–4 Section numbering; construction.

(a) *Section numbering*. (1) The model year of initial applicability is indicated by the last two digits of the 5-digit group. A section remains in effect for subsequent model years until it is superseded. The number following the hyphen designates what previous section is replaced by a future regulation.

Examples: Section 86.077–6 applies to the 1977 and subsequent model years until superseded. If a § 86.080–6 is promulgated it would take effect with the 1980 model year; § 86.077–6 would not apply after the 1979 model year. Section 86.077–10 would be replaced by § 86.078–10 beginning with the 1978 model year.

(2) Where a section still in effect references a section that has been superseded, the reference shall be interpreted to mean the superseding section.

(b) A section reference without a model year suffix refers to the section applicable for the appropriate model year.

(c) *Construction.* Except where indicated, the language in this subpart applies to both vehicles and engines. In many instances, language referring to engines is enclosed in parentheses and immediately follows the language discussing vehicles.

[45 FR 63747, Sept. 25, 1980, as amended at 59 FR 48492, Sept. 21, 1994]

§ 86.084–40 Automatic expiration of reporting and recordkeeping requirements.

(a) [Reserved]

(b) *Light-duty trucks and heavy-duty engines.* (1) All of the recordkeeping and reporting requirements in this subpart for which 1984 is the first model year of implementation will automatically expire on December 31, 1988, unless the Administrator acts to retain them.

(2) If the Administrator determines that the reporting and recordkeeping requirements should be retained she/he will also at that time establish the subsequent date of expiration, which will not be later than December 31, 1993.

[45 FR 63770, Sept. 25, 1980]

§ 86.085–1 General applicability.

(a) The provisions of this subpart apply to 1985 and later model year new gasoline-fueled and diesel light-duty vehicles, 1985 and later model year new gasoline-fueled and diesel light-duty trucks, and 1985 and later model year new gasoline-fueled and diesel heavy-duty engines.

(b) *Optional applicability.* A manufacturer may request to certify any heavy-duty vehicle 10,000 pounds GVWP or less in accordance with the light-duty truck provisions. Heavy-duty engine or vehicle provisions do not apply to such a vehicle.

(c) [Reserved]

(d) *Alternative Durability Program.* For 1985 and later model year light-duty vehicles and light-duty trucks, a manufacturer may elect to participate in the Alternative Durability Program. This optional program provides an alternative method of determining exhaust emission control system durability. The general procedures and a description of the programs are contained in § 86.085–13 and specific provisions on test vehicles and compliance procedures are contained in §§ 86.085–24 and 86.085–28 respectively.

(e) *Small volume manufacturers.* Special certification procedures are available for any manufacturer whose projected combined U.S. sales of light-duty vehicles, light-duty trucks, and heavy-duty engines in its product line are fewer than 10,000 units for the model year in which the manufacturer seeks certification. In order to certify its product line under these optional procedures, the small-volume manufacturer must first obtain the Administrator's approval. Vehicles produced at facilities leased, operated, controlled, supervised, or in 10 percent or greater part owned by the manufacturer shall be counted in calculating the total sales of the manufacturer. The small-volume manufacturer's certification procedures are described in § 86.084–14.

(f) *Optional Procedures for Determining Exhaust Opacity.* (1) The provisions of subpart I apply to tests which are performed by the Administrator, and optionally, by the manufacturer.

(2) Measurement procedures, other than that described in subpart I, may be used by the manufacturer provided the manufacturer satisfies the requirements of § 86.085–23(f).

(3) When a manufacturer chooses to use an alternative measurement procedure it has the responsibility to determine whether the results obtained by the procedure will correlate with the results which would be obtained from the measurement procedure in subpart I. Consequently, the Administrator will not routinely approve or disapprove any alternative opacity measurement

procedure or any associated correlation data which the manufacturer elects to use to satisfy the data requirements of subpart I.

(4) If a confirmatory test(s) is performed and the results indicate there is a systematic problem suggesting that the data generated under an optional alternative measurement procedure do not adequately correlate with subpart I data, EPA may require that all certificates of conformity not already issued be based on data from subpart I procedures.

(Secs. 202, 203, 206, 207, 208, 301a, Clean Air Act as amended; 42 U.S.C. 7521, 7522, 7525, 7541, 7542, 7601(a)

[48 FR 22548, May 19, 1983, as amended at 50 FR 10648, Mar. 15, 1985; 51 FR 24608, July 7, 1986]

§ 86.085–2 Definitions.

The definitions of § 86.084–2 remain effective. The definitions listed in this section apply beginning with the 1985 model year.

Abnormally treated vehicle, any diesel light-duty vehicle or diesel light-duty truck that is operated for less than five miles in a 30 day period immediately prior to conducting a particulate emissions test.

Composite particulate standard, for a manufacturer which elects to average diesel light-duty vehicles and diesel light-duty trucks together in the particulate averaging program, means that standard calculated according to the following equation and rounded to the nearest hundredth gram-per-mile:

$$\frac{(\mathrm{PROD_{LDV}})(\mathrm{STD_{LDV}})+(\mathrm{PROD_{LDT}})(\mathrm{STD_{LDT}})}{(\mathrm{PROD_{LDV}})+(\mathrm{PROD_{LDT}})} = \text{Manufacturer composite particulate standard}$$

Where:

$\mathrm{PROD_{LDV}}$ represents the manufacturer's total diesel light-duty vehicle production for those engine families being included in the average for a given model year.

$\mathrm{STD_{LDV}}$ represents the light-duty vehicle particulate standard.

$\mathrm{PROD_{LDT}}$ represents the manufacturer's total diesel light-duty truck production for those engine families being included in the average for a given model year.

$\mathrm{STD_{LDT}}$ represents the light-duty truck particulate standard.

Family particulate emission limit means the diesel particulate emission level to which an engine family is certified in the particulate averaging program, expressed to an accuracy of one hundredth gram-per-mile.

Incomplete gasoline-fueled heavy-duty vehicle means any gasoline-fueled heavy-duty vehicle which does not have the primary load-carrying device, or passenger compartment, or engine compartment or fuel system attached.

Production-weighted average means the manufacturer's production-weighted average particulate emission level, for certification purposes, of all of its diesel engine families included in the particulate averaging program. It is calculated at the end of the model year by multiplying each family particulate emission limit by its respective production, summing these terms, and dividing the sum by the total production of the effected families. Those vehicles produced for sale in California or at high altitude shall each be averaged separately from those produced for sale in any other area.

Primary intended service class means:

(a) The primary service application group for which a heavy-duty diesel engine is designed and marketed, as determined by the manufacturer. The primary intended service classes are designated as light, medium, and heavy heavy-duty diesel engines. The determination is based on factors such as vehicle GVW, vehicle usage and operating patterns, other vehicle design characteristics, engine horsepower, and other engine design and operating characteristics.

(1) Light heavy-duty diesel engines usually are non-sleeved and not designed for rebuild; their rated horsepower generally ranges from 70 to 170. Vehicle body types in this group might include any heavy-duty vehicle built for a light-duty truck chassis, van

trucks, multi-stop vans, recreational vehicles, and some single axle straight trucks. Typical applications would include personal transportation, light-load commercial hauling and delivery, passenger service, agriculture, and construction. The GVWR of these vehicles is normally less than 19,500 lbs.

(2) Medium heavy-duty diesel engines may be sleeved or non-sleeved and may be designed for rebuild. Rated horsepower generally ranges from 170 to 250. Vehicle body types in this group would typically include school buses, tandem axle straight trucks, city tractors, and a variety of special purpose vehicles such as small dump trucks, and trash compactor trucks. Typical applications would include commercial short haul and intra-city delivery and pickup. Engines in this group are normally used in vehicles whose GVWR varies from 19,500–33,000 lbs.

(3) Heavy heavy-duty diesel engines are sleeved and designed for multiple rebuilds. Their rated horsepower generally exceeds 250. Vehicles in this group are normally tractors, trucks, and buses used in inter-city, long-haul applications. These vehicles normally exceed 33,000 lbs GVWR.

Useful life means:

(a) For light-duty vehicles a period of use of 5 years or 50,000 miles, whichever first occurs.

(b) For a light-duty truck engine family, a period of use of 11 years or 120,000 miles, whichever occurs first.

(c) For a gasoline-fueled heavy-duty engine family (and in the case of evaporative emission regulations, for gasoline-fueled heavy-duty vehicles), a period of use of 8 years or 110,000 miles, whichever first occurs.

(d) For a diesel heavy-duty engine family:

(1) For light heavy-duty diesel engines, a period of use of 8 years or 110,000 miles, whichever first occurs.

(2) For medium heavy-duty diesel engines, a period of use of 8 years or 185,000 miles, whichever first occurs.

(3) For heavy heavy-duty diesel engines, a period of use of 8 years or 290,000 miles, whichever first occurs.

(e) As an option for both light-duty truck and heavy-duty engine families, an alternative useful life period assigned by the Administrator under the provisions of paragraph (f) of § 86.085–21.

(f) The useful-life period for purposes of the emissions defect warranty and emissions performance warranty shall be a period of 5 years/50,000 miles whichever first occurs, for light-duty trucks, gasoline heavy-duty engines, and light heavy-duty diesel engines. For all other heavy-duty diesel engines the aforementioned period is 5 years/100,000 miles, whichever first occurs. However, in no case may this period be less than the manufacturer's basic mechanical warranty period for the engine family.

[48 FR 33462, July 21, 1983, as amended at 48 FR 52184, Nov. 16, 1983; 52 FR 47863, Dec. 16, 1987]

§ 86.085–13 Alternative Durability Program.

(a) The procedures of the Alternative Durability Program are optional. Manufacturers may use these optional procedures to determine deterioration factors instead of using the procedures that this subpart otherwise requires.

(b) The optional procedures of the Alternative Durability Program apply only to light-duty vehicles and light-duty trucks, and are effective for the 1985 and later model years. All manufacturers of these vehicles are eligible to participate in this program.

(c) For engine families subject to the procedures of the Alternative Durability Program, the manufacturer shall submit deterioration factors to the Administrator for approval to use them for certification. The Administrator shall approve the use of deterioriation factors that:

(1) The manufacturer attests are representative of the durability performance of its vehicles in actual field use when maintained according to the manufacturer's maintenance instructions (as limited under § 86.084–25(a)), and

(2) Are equal to or greater than the deterioration factors that EPA determines under paragraph (d) of this section.

(d) EPA shall determine minimum deterioration factors for engine families subject to the Alternative Durability Program. This determination

shall be based on a procedure of grouping engine families (see § 86.085–24(a)) in order to use historical certification data to determine deterioration factors for each engine family group. The historical data shall be updated yearly through the testing of production durability-data vehicles. Test vehicle requirements under these procedures are contained in § 86.085–24(h) and compliance requirements are contained in § 86.085–28 (a)(5) and (b)(5).

(e) *Request Procedures.* (1) A manufacturer wishing to participate in the Alternative Durability Program must submit to the Administrator, for each model year, a written request describing the engine families that the manufacturer elects to be included in the program.

(2) The Administrator may declare ineligible any engine family for which the Administrator determines there is unreasonable risk in determining a deterioration factor using the methods of the Alternative Durability Program. Furthermore, the Administrator may limit the number of engine families within the manufacturer's product line that are eligible for the Alternative Durability Program.

(3) Upon approval of the manufacturer's request to participate, the Administrator and the manufacturer may enter into a written agreement prescribing the terms and conditions of the program. This agreement shall be equitable as compared to agreements entered into with other manufacturers. The agreement shall specify the following:

(i) The engine families to be included in the program and the engine family groups that have been established by the provisions of § 86.085–24(a) (8) and (9).

(ii) The procedures for the selection of production durability-data vehicles specified under the provisions of § 86.085–24(h).

(iii) The procedures for the determination of minimum exhaust emission deterioration factors for each engine family group.

(f) *Withdrawal from Alternative Durability Program.* (1) Subject to the conditions of the following paragraphs, a manufacturer may, at any time, withdraw all of its product line or separate engine family groups from this program. Only entire engine family groups may be withdrawn.

(2) Once any engine family in an engine family group is certified using deterioration factors determined in the Alternative Durability Program, the manufacturer shall operate and test the production durability-data vehicles specified in § 86.085–24(h) in accordance with the procedures of this part.

(3) The Administrator shall notify the manufacturer if a nonconformity of a category of vehicles within the engine family group is indicated by the production durability data. For the purpose of this paragraph, a nonconformity is determined to exist if:

(i) Any emission-data vehicle within an engine family of the model year most recently certified under the Alternative Durability Program is projected to exceed an emission standard by applying deterioration factors generated by a production durability-data vehicle within the same engine family, or

(ii) Any of the most recent model year's production durability-data vehicle configurations tested under paragraph (f)(2) of this section line crosses as defined in § 86.085–28(a)(5)(ii)(C). For the purpose of this paragraph, data from identical vehicles will be averaged as under § 86.085–28(a)(4)(i) (A) and (B).

(4) If the Administrator notifies a manufacturer of such a nonconformity, the manufacturer shall submit, by a date specified by the Administrator, a plan to remedy the nonconformity which is acceptable to the Director, Office of Mobile Sources. For the purpose of this paragraph, the term ''remedy the nonconformity'' will have the same meaning as it does when it appears in section 207(c)(1) of the Clean Air Act.

(5) The manufacturer shall comply with the terms of the remedial plan approved by the Director, Office of Mobile Sources.

(6) If a manufacturer does not comply with the requirements of paragraph (f)(2), (4), or (5) of this section, the Administrator may deem the certificate of conformity for the affected engine families void *ab initio*.

[48 FR 22548, May 19, 1983]

§ 86.085–20 Incomplete vehicles, classification.

(a) An incomplete truck less than 8,500 pounds gross vehicle weight rating shall be classified by the manufacturer as a light-duty truck or as a heavy-duty vehicle. Incomplete light-duty trucks shall be described in the manufacturer's application for certification. The frontal area and curb weight used for certification purposes shall be specified on the label required in § 86.085–35(d). Incomplete heavy-duty trucks must be labeled as required in § 86.085–35(e) and § 86.085–35(g).

(b) [Reserved]

[48 FR 1439, Jan. 12, 1983]

§ 86.085–37 Production vehicles and engines.

(a) Any manufacturer obtaining certification under this part shall supply to the Administrator, upon request, a reasonable number of production vehicles (or engines) selected by the Administrator which are representative of the engines, emission control systems, fuel systems, and transmission offered and typical of production models available for sale under the certificate. These vehicles (or engines) shall be supplied for testing at such time and place and for such reasonable periods as the Administrator may require. Heavy-duty engines supplied under this paragraph may be required to be mounted in chassis and appropriately equipped for operation on a chassis dynamometer.

(b)(1) Any manufacturer of light-duty vehicles or light-duty trucks obtaining certification under this part shall notify the Administrator, on a yearly basis, of the number of vehicles domestically produced for sale in the United States and the number of vehicles produced and imported for sale in the United States during the preceding year. Such information shall also include the number of vehicles produced for sale pursuant to § 88.204–94(b) of this chapter. A manufacturer may elect to provide this information every 60 days instead of yearly by combining it with the notification required under § 86.079–36. The notification must be submitted 30 days after the close of the reporting period. A manufacturer may combine the information required under § 86.1712(b) with the information included in paragraphs (b)(1) (i) through (iv) of this section into the report required under this section. The vehicle production information required shall be submitted as follows:

(i) Total production volume expressed in terms of units produced;

(ii) Model type production volume, expressed for each model type in terms of units produced and as a percentage of total production;

(iii) Base level production volume, expressed for each base level in terms of units produced and as percentage of:

(A) Total production of its respective model type(s), and

(B) Total production; and

(iv) Vehicle configuration production volume, expressed for each vehicle configuration in terms of units produced, and as a percentage of the total production of its respective base level. In addition, each vehicle configuration shall be identified by its appropriate engine-system combination.

(2) All light-duty vehicles and light-duty trucks covered by a certificate of conformity under § 86.082–30(a) shall be adjusted by the manufacturer to the ignition or injection timing specification detailed in § 86.079–36(a)(1)(iii)(D).

(c) Any heavy-duty engine or gasoline-fueled heavy-duty vehicle manufacturer obtaining certification under this part shall notify the Administrator, on a yearly basis, of the number of engines or vehicles of such engine family-evaporative emission family-engine displacement-exhaust emission control system-fuel system combination produced for sale in the United States during the preceding year.

(d) The following definitions apply to this section:

(1) *Model type* means a unique combination of car line, basic engine, and transmission class.

(2) *Base level* means a unique combination of basic engine, inertia weight, and transmission class.

(3) *Vehicle configuration* means a unique combination of basic engine,

engine code, inertia weight, transmission configuration, and axle ratio within a base level.

[48 FR 1455, Jan. 12, 1983, as amended at 59 FR 50073, Sept. 30, 1994; 62 FR 31233, June 6, 1997]

EFFECTIVE DATE NOTE: At 62 FR 31233, June 6, 1997, § 86.085–37 was amended by revising paragraph (b)(1) introductory text, effective Aug. 5, 1997. That text contains information collection and recordkeeping requirements and will not become effective until approval has been given by the Office of Management and Budget.

§ 86.087–2 Definitions.

Composite particulate standard for a manufacturer which elects to average diesel light-duty vehicles and diesel light-duty trucks with a loaded vehicle weight equal to or less than 3,750 lbs (LDDT1s) together in the particulate averaging program, means that standard calculated according to the following equation and rounded to the nearest hundredth gram per mile:

$$\frac{(\mathrm{PROD}_{\mathrm{LDV}})(\mathrm{STD}_{\mathrm{LDV}}) + (\mathrm{PROD}_{\mathrm{LDDT1}})(\mathrm{STD}_{\mathrm{LDDT1}})}{(\mathrm{PROD}_{\mathrm{LDV}}) + (\mathrm{PROD}_{\mathrm{LDDT1}})} = \text{Manufacturer composite particulate standard}$$

Where:

$\mathrm{PROD}_{\mathrm{LDV}}$ represents the manufacturer's total light-duty vehicle production for those engine families being included in the average for a given model year.

$\mathrm{STD}_{\mathrm{LDV}}$ represents the light-duty vehicle particulate standard.

$\mathrm{PROD}_{\mathrm{LDDT1}}$ represents the manufacturer's total diesel light-duty truck production for those engine families with a loaded vehicle weight equal to or less than 3,750 lbs which are being included in the average for a given model year.

$\mathrm{STD}_{\mathrm{LDDT1}}$ represents the light-duty truck particulate standard for diesel light-duty trucks with a loaded vehicle weight equal to or less than 3,750 lbs.

Production-weighted average means the manufacturer's production-weighted average particulate emission level, for certification purposes, of all of its diesel engine families included in the particulate averaging program. It is calculated at the end of the model year by multiplying each family particulate emission limit by its respective production, summing these terms, and dividing the sum by the total production of the affected families. Those vehicles produced for sale in California or at high altitude shall each be averaged separately from those produced for sale in any other area. Diesel light-duty trucks with a loaded vehicle weight equal to or greater than 3,751 lbs (LDDT2s) shall only be averaged with other diesel light-duty trucks with a loaded vehicle weight equal to or greater than 3,751 lbs produced by that manufacturer.

[53 FR 43875, Oct. 31, 1988]

§ 86.087–38 Maintenance instructions.

(a) The manufacturer shall furnish or cause to be furnished to the purchaser of each new motor vehicle (or motor vehicle engine) subject to the standards prescribed in § 86.087–8, § 86.087–9, § 86.087–10, or § 86.087–11, as applicable, written instructions for the proper maintenance and use of the vehicle (or engine), by the purchaser consistent with the provisions of § 86.087–25, which establishes what scheduled maintenance the Administrator approves as being reasonable and necessary. For light-duty vehicle manufacturers optionally complying with § 86.087–25(a) for the 1987 model year, the Administrator approves any scheduled maintenance allowed by § 86.087–25(a) as being reasonable and necessary.

(1) The maintenance instructions required by this section shall be in clear, and to the extent practicable, nontechnical language.

(2) The maintenance instructions required by this section shall contain a general description of the documentation which the manufacturer will require from the ultimate purchaser or any subsequent purchaser as evidence of compliance with the instructions.

(b) Instructions provided to purchasers under paragraph (a) of this section shall specify the performance of all scheduled maintenance performed by the manufacturer on certification durability vehicles and, in cases where the manufacturer performs less maintenance on certification durability vehicles than the allowed limit, may specify the performance of any scheduled maintenance allowed under § 86.087–25 (or under § 86.085–25(a), for light-duty vehicle families optionally complying with that section for the 1987 model year).

(c) Scheduled emission-related maintenance in addition to that performed under § 86.087–25(b) may only be recommended to offset the effects of abnormal in-use operating conditions, except as provided in paragraph (d) of this section. The manufacturer shall be required to demonstrate, subject to the approval of the Administrator, that such maintenance is reasonable and technologically necessary to assure the proper functioning of the emission control system. Such additional recommended maintenance shall be clearly differentiated, in a form approved by the Administrator, from that approved under § 86.087–25(b).

(d) Inspections of emission-related parts or systems with instructions to replace, repair, clean, or adjust the parts or systems if necessary, are not considered to be items of scheduled maintenance which insure the proper functioning of the emission control system. Such inspections, and any recommended maintenance beyond that approved by the Administrator as reasonable and necessary under paragraphs (a), (b), and (c) of this section, may be included in the written instructions furnished to vehicle owners under paragraph (a) of this section: *Provided,* That such instructions clearly state, in a form approved by the Administrator, that the owner need not perform such inspections or recommended maintenance in order to maintain the emission warranty or manufacturer recall liability.

(e) If the vehicle has been granted an alternative useful life period under the provisions of § 86.087–21(f), the manufacturer may choose to include in such instructions an explanation of the distinction between the alternative useful life specified on the label, and the emissions defect and emissions performance warranty period. The explanation must clearly state that the useful life period specified on the label represents the average period of use up to retirement or rebuild for the engine family represented by the engine used in the vehicle. An explanation of how the actual useful lives of engines used in various applications are expected to differ from the average useful life may be included. The explanation(s) shall be in clear, non-technical language that is understandable to the ultimate purchaser.

(f) If approved by the Administrator, the instructions provided to purchasers under paragraph (a) of this section shall indicate what adjustments or modifications, if any, are necessary to allow the vehicle to meet applicable emission standards at elevations above 4,000 feet, or at elevations of 4,000 feet or less.

(Secs. 202, 203, 206, 207, 208, 301a, Clean Air Act, as amended; 42 U.S.C. 7521, 7522, 7525, 7541, 7542, 7601a)

[50 FR 10693, Mar. 15, 1985, as amended at 51 FR 24610, July 7, 1986]

§ 86.088–2 Definitions.

The definitions in § 86.085–2 remain effective. The definitions in this section apply beginning with the 1988 model year.

Composite NO_X standard, for a manufacturer which elects to average light-duty trucks subject to the NO_X standard of § 86.088–9(a)(iii)(A) together with those subject to the NO_X standard of § 86.088–9(a)(iii)(B) in the light-duty truck NO_X averaging program, means that standard calculated according to the following equation and rounded to the nearest one-tenth gram per mile:

$$\frac{\left[(\mathrm{PROD_A})(\mathrm{STD_A})+(\mathrm{PROD_B})(\mathrm{STD_B})\right]}{\left[(\mathrm{PROD_A})+(\mathrm{PROD_B})\right]} = \text{Manufacturer's Composite } \mathrm{NO_x} \text{ Standard,}$$

Where:

$PROD_A$ = The manufacturer's total light-duty truck production for those engine families subject to the standard of § 86.088–9(a)(iii)(A) and included in the average for a given model year,

STD_A = The NO_X standard of § 86.088–9(a)(iii)(A),

$PROD_B$ = The manufacturer's total light-duty truck production for those engine families subject to the standard of § 86.088–9(a)(iii)(B) and included in the average for a given model year, and

STD_B = The NO_X standard of § 86.088–9(a)(iii)(B).

Critical emission-related components are those components which are designed primarily for emission control, or whose failure may result in a significant increase in emissions accompanied by no significant impairment (or perhaps even an improvement) in performance, driveability, and/or fuel economy as determined by the Administrator.

Critical emission-related maintenance means that maintenance to be performed on critical emission-related components.

Emission-related maintenance means that maintenance which does substantially affect emissions or which is likely to affect the emissions deterioration of the vehicle or engine during normal in-use operation, even if the maintenance is performed at some time other than that which is recommended.

Family NO_X emission limit means the NO_X emission level to which an engine family is certified in the light-duty truck NO_X averaging program, expressed to one-tenth of a gram per mile accuracy.

Non-emission-related maintenance means that maintenance which does not substantially affect emissions and which does not have a lasting effect on the emissions deterioration of the vehicle or engine during normal in-use operation once the maintenance is performed.

Production-weighted NO_X average means the manufacturer's production-weighted average NO_X emission level, for certification purposes, of all of its light-duty truck engine families included in the NO_X averaging program. It is calculated at the end of the model year by multiplying each family NO_X emission limit by its respective production, summing those terms, and dividing the sum by the total production of the effected families. Those vehicles produced for sale in California or at high altitude shall each be averaged separately from those produced for sale in any other area.

Production-weighted particulate average means the manufacturer's production-weighted average particulate emission level, for certification purposes, of all of its diesel engine families included in the particulate averaging program. It is calculated at the end of the model year by multiplying each family particulate emission limit by its respective production, summing those terms, and dividing the sum by the total production of the effected families. Those vehicles produced for sale in California or at high altitude shall each be averaged separately from those produced for sale in any other area.

(Secs. 202, 203, 206, 207, 208, 301a, Clean Air Act, as amended; 42 U.S.C. 7521, 7522, 7525, 7541, 7542, 7601a)

[50 FR 10648, Mar. 15, 1985]

§ 86.088–10 Emission standards for 1988 and 1989 model year gasoline-fueled heavy-duty engines and vehicles.

(a)(1) Exhaust emissions from new 1988 and later model year gasoline-fueled heavy-duty engines shall not exceed:

(i) For engines intended for use in all vehicles except as provided in paragraph (a)(3) of this paragraph,

(A) *Hydrocarbons.* 1.1 grams per brake horsepower-hour, as measured under transient operating conditions.

(B) *Carbon monoxide.* (*1*) 14.4 grams per brake horsepower-hour, as measured under transient operating conditions.

(*2*) *Gasoline-fueled heavy-duty engines utilizing aftertreatment technology.* 0.50 percent of exhause gas flow at curb idle.

(C) *Oxides of nitrogen.* 10.6 grams per brake horsepower-hour, as measured under transient operating conditions.

(ii) For engines intended for use only in vehicles with a Gross Vehicle Weight Rating of greater than 14,000 pounds,

(A) *Hydrocarbons.* 1.9 grams per brake horsepower-hour, as measured under transient operating conditions.

(B) *Carbon monoxide.* (*1*) 37.1 grams per brake horsepower-hour as measured under transient operating conditions.

(*2*) *Gasoline-fueled heavy-duty engines utilizing aftertreatment technology.* 0.50 percent of exhaust gas flow at curb idle.

(C) *Oxides of nitrogen.* 10.6 grams per brake horsepower-hour, as measured under transient operating conditions.

(2) The standards set forth in paragraph (a)(1) of this section refer to the exhaust emitted over the operating schedule set forth in paragraph (f)(1) of appendix I to this part, and measured and calculated in accordance with the procedures set forth in subparts N or P.

(3)(i) A manufacturer may certify one or more gasoline-fueled heavy-duty engine configurations intended for use in all vehicles to the emission standards set forth in paragraph (a)(1)(ii) of this paragraph: *Provided,* That the total model year sales of such configuration(s) being certified to the emission standards in paragraph (a)(1)(ii) of this section represent no more than 5 percent of total model year sales of all gasoline-fueled heavy-duty engines intended for use in vehicles with a Gross Vehicle Weight Rating of up to 14,000 pounds by the manufacturer.

(ii) The configurations certified to the emission standards of paragraph (a)(1)(ii) of this section under the provisions of paragraph (a)(3)(i) of this section shall still be required to meet the evaporative emission standards set forth in paragraphs (b)(1)(i)(A) and (b)(2)(i) of this section.

(b)(1) Evaporative emissions from 1988 and later model year gasoline-fueled heavy-duty vehicles shall not exceed:

(i) *Hydrocarbons.* (A) For vehicles with a Gross Vehicle Weight Rating of up to 14,000 pounds, 3.0 grams per test.

(B) For vehicles with a Gross Vehicle Weight Rating of greater than 14,000 pounds, 4.0 grams per test.

(2)(i) For vehicles with a Gross Vehicle Weight Rating of up to 26,000 pounds, the standards set forth in paragraph (b)(1) of this section refer to a composite sample of fuel evaporative emissions collected under the conditions set forth in subpart M and measured in accordance with those procedures.

(ii) For vehicles with a Gross Vehicle Weight Rating of greater than 26,000 pounds, the standard set forth in paragraph (b)(1)(i)(B) of this section refers to the manufacturer's engineering design evaluation using good engineering practice (a statement of which is required in § 86.088–23(b)(4)(ii)).

(c) No crankcase emissions shall be discharged into the ambient atmosphere from any new 1988 or later model year gasoline-fueled heavy-duty engine.

(d) Every manufacturer of new motor vehicle engines subject to the standards prescribed in this section shall, prior to taking any of the actions specified in section 203(a)(1) of the Act, test or cause to be tested motor vehicle engines in accordance with applicable procedures in subpart N or P of this part to ascertain that such test engines meet the requirements of paragraphs (a) and (c) of this section.

(Secs. 202, 203, 206, 207, 208, 301a, Clean Air Act, as amended; 42 U.S.C. 7521, 7522, 7525, 7541, 7542, 7601a)

[50 FR 10651, Mar. 15, 1985, as amended at 52 FR 47864, Dec. 16, 1987]

§ 86.090–1 General applicability.

(a) The provisions of this subpart apply to: 1990 and later model year new Otto-cycle and diesel light-duty vehicles; 1990 and later model year new Otto-cycle and diesel light-duty trucks; and, 1990 and later model year new Otto-cycle and diesel heavy-duty engines.

(b) *Optional applicability.* A manufacturer may request to certify any heavy-duty vehicle of 10,000 pounds

Gross Vehicle Weight Rating or less to the light-duty truck provisions. Heavy-duty engine or vehicle provisions do not apply to such a vehicle.

(c) [Reserved]

(d) *Alternative Durability Program.* For 1990 and later model year light-duty vehicles and light-duty trucks, a manufacturer may elect to participate in the Alternative Durability Program. This optional program provides an alternative method of determining exhaust emission control system durability. The general procedures and a description of the programs are contained in § 86.085–13 and specific provisions on test vehicles and compliance procedures are contained in § 86.085–24 and § 86.088–28 respectively.

(e) *Small-Volume Manufacturers.* Special certification procedures are available for any manufacturer whose projected combined U.S. sales of light-duty vehicles, light-duty trucks, and heavy-duty engines in its product line are fewer than 10,000 units for the model year in which the manufacturer seeks certification. In order to certify its product line under these optional procedures, the small-volume manufacturer must first obtain the Administrator's approval. Vehicles produced at facilities leased, operated, controlled, supervised, or is ten percent or greater part owned by the manufacturer shall be counted in calculating the total sales of the manufacturer. The small-volume manufacturer's certification procedures are described in § 86.090–14.

(f) *Optional Procedures for Determining Exhaust Opacity.* (1) The provisions of subpart I apply to tests which are performed by the Administrator, and optionally, by the manufacturer.

(2) Measurement procedures, other than that described in subpart I, may be used by the manufacturer provided the manufacturer satisfies the requirements of § 86.090–23(f).

(3) When a manufacturer chooses to use an alternative measurement procedure it has the responsibility to determine whether the results obtained by the procedure will correlate with the results which would be obtained from the measurement procedure in subpart I. Consequently, the Administrator will not routinely approve or disapprove any alternative opacity measurement procedure or any associated correlation data which the manufacturer elects to use to satisfy the data requirements of subpart I.

(4) If a confirmatory test(s) is performed and the results indicate there is a systematic problem suggesting that the data generated under an optional alternative measurement procedure do not adequately correlate with subpart I data, EPA may require that all certificates of conformity not already issued be based on data from subpart I procedures.

[54 FR 14459, Apr. 11, 1989]

§ 86.090–2 Definitions.

The definitions in § 86.088–2 remain effective. The definitions in this section apply beginning with the 1990 model year.

Averaging for heavy-duty engines means the exchange of NO_X and particulate emission credits among engine families within a given manufacturer's product line.

Averaging set means a subcategory of heavy-duty engines within which engine families can average and trade emission credits with one other.

Banking means the retention of heavy-duty engine NO_X and particulate emission credits, by the manufacturer generating the emission credits, for use in future model year certification programs as permitted by regulation.

Composite particulate standard, for a manufacturer which elects to average light-duty vehicles and light-duty trucks together in either the petroleum-fueled or methanol-fueled light-duty particulate averaging program, means that standards calculated using the following equation and rounded to the nearest one-hundredth (0.01) of a gram per mile:

$$(\mathrm{PROD_{LDV}})\frac{(\mathrm{STD_{LDV}})+(\mathrm{PROD_{LDT}})}{(\mathrm{PROD_{LDV}})+(\mathrm{PROD_{LDT}})}(\mathrm{STD_{LDT}}) = \text{Manufacturer composite particulate standard}$$

Where:

$PROD_{LDV}$ represents the manufacturer's total petroleum-fueled diesel or methanol-fueled diesel light-duty vehicle production for those engine families being included in the appropriate average for a given model year.

STD_{LDV} represents the light-duty vehicle particulate standard.

$PROD_{LDT}$ represents the manufacturer's total petroleum-fueled diesel or methanol-fueled diesel light-duty truck production for those engine families being included in the appropriate average for a given model year.

STD_{LDT} represents the light-duty truck particulate standard.

Dedicated vehicle (or engine) means any motor vehicle (or motor vehicle engine) engineered and designed to be operated using a single fuel. Flexible fuel vehicles and multi-fuel vehicles are not dedicated vehicles.

Diesel means type of engine with operating characteristics significantly similar to the theoretical Diesel combustion cycle. The non-use of a throttle during normal operation is indicative of a diesel engine.

Dual fuel vehicle (or engine) means any motor vehicle (or motor vehicle engine) engineered and designed to be operated on two different fuels, but not on a mixture of fuels.

Emission credits mean the amount of emission reductions or exceedances, by a heavy-duty engine family, below or above the emission standard, respectively. Emission credits below the standard are considered as ''positive credits,'' while emission credits above the standard are considered as ''negative credits.'' In addition, ''projected credits'' refer to emission credits based on the projected U.S. production volume of the engine family. ''Reserved credits'' are emission credits generated within a model year waiting to be reported to EPA at the end of the model year. ''Actual credits'' refer to emission credits based on actual U.S. production volumes as contained in the end-of-year reports submitted to EPA. Some or all of these credits may be revoked if EPA review of the end of year reports or any subsequent audit actions uncover problems or errors.

Family emission limit (FEL) means an emission level declared by the manufacturer which serves in lieu of an emission standard for certification purposes in any of the averaging, trading, or banking programs. FELs must be expressed to the same number of decimal places as the applicable emission standard. The FEL for an engine family using NO_X or particulate NCPs must equal the value of the current NO_X or particulate emission standard.

Flexible fuel vehicle (or engine) means any motor vehicle (or motor vehicle engine) engineered and designed to be operated on any mixture of two or more different fuels.

Methanol-fueled means any motor vehicle or motor vehicle engine that is engineered and designed to be operated using methanol fuel (*i.e.*, a fuel that contains at least 50 percent methanol (CH_3OH) by volume) as fuel. Flexible fuel vehicles are methanol-fueled vehicles.

Non-oxygenated hydrocarbon means organic emissions measured by a flame ionization detector, excluding methanol.

Otto-cycle means type of engine with operating characteristics significantly similar to the theoretical Otto combustion cycle. The use of a throttle during normal operation is indicative of an Otto-cycle engine.

Primary intended service class means:

(a) The primary service application group for which a heavy-duty diesel engine is designed and marketed, as determined by the manufacturer. The primary intended service classes are designated as light, medium, and heavy heavy-duty diesel engines. The determination is based on factors such as vehicle GVW, vehicle usage and operating patterns, other vehicle design characteristics, engine horsepower, and other engine design and operating characteristics.

(1) Light heavy-duty diesel engines usually are non-sleeved and not designed for rebuild; their rated horsepower generally ranges from 70 to 170. Vehicle body types in this group might include any heavy-duty vehicle built for a light-duty truck chassis, van trucks, multi-stop vans, recreational vehicles, and some single axle straight trucks. Typical applications would include personal transportation, light-load commercial hauling and delivery,

passenger service, agriculture, and construction. The GVWR of these vehicles is normally less than 19,500 lbs.

(2) Medium heavy-duty diesel engines may be sleeved or non-sleeved and may be designed for rebuild. Rated horsepower generally ranges from 170 to 250. Vehicle body types in this group would typically include school buses, tandem axle straight trucks, city tractors, and a variety of special purpose vehicles such as small dump trucks, and trash compactor trucks. Typical applications would include commercial short haul and intra-city delivery and pickup. Engines in this group are normally used in vehicles whose GVWR varies from 19,500–33,000 lbs.

(3) Heavy heavy-duty diesel engines are sleeved and designed for multiple rebuilds. Their rated horsepower generally exceeds 250. Vehicles in this group are normally tractors, trucks, and buses used in inter-city, long-haul applications. These vehicles normally exceed 33,000 lbs. GVWR.

Production weighted particulate average means the manufacturer's production-weighted average particulate emission level, for certification purposes, of all of its diesel engine families included in the light-duty particulate averaging program. It is calculated at the end of the model year by multiplying each family particulate emission limit by its respective production, summing those terms, and dividing the sum by the total production of the effected families. Those vehicles produced for sale in California or at high altitude shall each be averaged separately from those produced for sale in any other area.

Throttle means a device used to control an engine's power output by limiting the amount of air entering the combustion chamber.

Total Hydrocarbon Equivalent means the sum of the carbon mass emissions of non-oxygenated hydrocarbons, methanol, formaldehyde or other organic compounds that are separately measured, expressed as gasoline-fueled vehicle hydrocarbons. In the case of exhaust emissions, the hydrogen-to-carbon ratio of the equivalent hydrocarbon is 1.85:1. In the case of diurnal and hot soak emissions, the hydrogen-to-carbon ratios of the equivalent hydrocarbons are 2.33:1 and 2.2:1, respectively.

Trading means the exchange of heavy-duty engine NO_X or particulate emission credits between manufacturers.

Useful life means:

(a) For light-duty vehicles a period of use of 5 years or 50,000 miles, whichever first occurs.

(b) For a light-duty truck engine family, a period of use of 11 years or 120,000 miles, whichever occurs first.

(c) For an Otto-cycle heavy-duty engine family, a period of use of 8 years of 110,000 miles, whichever first occurs.

(d) For a diesel heavy-duty engine family:

(1) For light heavy-duty diesel engines, period of use of 8 years or 110,000 miles, whichever first occurs.

(2) For medium heavy-duty diesel engines, a period of use of 8 years or 185,000 miles, whichever first occurs.

(3) For heavy heavy-duty diesel engines, a period of use of 8 years or 290,000 miles, whichever first occurs.

(e) As an option for both light-duty truck and heavy-duty engine families, an alternative useful life period assigned by the Administrator under the provisions of paragraph (f) of § 86.090–21.

(f) The useful-life period for purposes of the emissions defect warranty and emissions performance warranty shall be a period of 5 years/50,000 miles whichever first occurs, for light-duty trucks, Otto cycle heavy-duty engines and light heavy-duty diesel engines. For all other heavy-duty diesel engines the aforementioned period is 5 years/100,000 miles, whichever first occurs. However, in no case may this period be less than the manufacturer's basic mechanical warranty period for the engine family.

[55 FR 30612, July 26, 1990, as amended at 60 FR 34334, June 30, 1995; 62 FR 31233, June 6, 1997]

§ 86.090–3 Abbreviations.

(a) The abbreviations in § 86.078–3 remain effective. The abbreviations in this section apply beginning with the 1990 model year.

(b) The abbreviations in this section apply to this subpart, and also to subparts B, E, F, M, N, and P of this part, and have the following meanings:

DNPH—2,4-dinitrophenylhydrazine.
FEL—Family emission limit.
GC—Gas chromatograph.
HPLC—High-pressure liquid chromatography.
MeOH—Methanol (CH_3OH).
Mg—Megagram(s) (1 million grams)
MJ—Megajoule(s) (1 million joules)
THCE—Total Hydrocarbon Equivalent
UV—Ultraviolet.

[55 FR 30613, July 26, 1990, as amended at 60 FR 34335, June 30, 1995]

§ 86.090–5 General standards; increase in emissions; unsafe conditions.

(a)(1) Every new motor vehicle (or new motor vehicle engine) manufactured for sale, sold, offered for sale, introduced, or delivered for introduction to commerce, or imported into the United States for sale or resale which is subject to any of the standards prescribed in this subpart shall be covered by a certificate of conformity issued pursuant to §§ 86.090–21, 86.090–22, 86.090–23, 86.090–29, 86.090–30, 86.079–31, 86.079–32, 86.079–33, and 86.082–34.

(2) No heavy-duty vehicle manufacturer shall take any of the actions specified in section 203(a)(1) of the Act with respect to any Otto-cycle or diesel heavy-duty vehicle which uses an engine which has not been certified as meeting applicable standards.

(3) Notwithstanding paragraphs (a)(1) and (2) of this section, a light or heavy duty motor vehicle equipped with an engine certified to the nonroad provision of 40 CFR part 89 may be sold, offered for sale or otherwise introduced into commerce by a motor vehicle manufacturer to a secondary manufacturer if the motor vehicle manufacturer obtains written assurance from the secondary manufacturer that such vehicle will be converted to a nonroad vehicle or to a piece of nonroad equipment, as defined in 40 CFR part 89, before title is transferred to an ultimate purchaser. Failure of the secondary manufacturer to convert such vehicles to nonroad vehicles or equipment prior to transfer to an ultimate purchaser shall be considered a violation of section 203(a) (1) and (3) of the Clean Air Act.

(b)(1) Any system installed on or incorporated in a new motor vehicle (or new motor vehicle engine) to enable such vehicle (or engine) to conform to standards imposed by this subpart.

(i) Shall not in its operation or function cause the emission into the ambient air of any noxious or toxic substance that would not be emitted in the operation of such vehicle (or engine) without such system, except as specifically permitted by regulation; and

(ii) Shall not in its operation, function or malfunction result in any unsafe condition endangering the motor vehicle, its occupants, or persons or property in close proximity to the vehicle.

(2) In establishing the physically adjustable range of each adjustable parameter on a new motor vehicle (or new motor vehicle engine), the manufacturer shall ensure that, taking into consideration the production tolerances, safe vehicle driveability characteristics are available within that range, as required by section 202(a)(4) of the Clean Air Act.

(3) Every manufacturer of new motor vehicles (or new motor vehicle engines) subject to any of the standards imposed by this subpart shall, prior to taking any of the actions specified in section 203(a)(1) of the Act, test or cause to be tested motor vehicles (or motor vehicle engines) in accordance with good engineering practice to ascertain that such test vehicles (or test engines) will meet the requirements of this section for the useful life of the vehicle (or engine).

[54 FR 14460, Apr. 11, 1989, as amended at 61 FR 58106, Nov. 12, 1996]

§ 86.090–8 Emission standards for 1990 and later model year light-duty vehicles.

(a)(1) Exhaust emissions from 1990 and later model year light-duty vehicles shall not exceed (compliance with these standards is optional for 1990 model year methanol-fueled vehicles):

(i)(A) *Hydrocarbons (for petroleum-fueled Otto-cycle and diesel vehicles).* 0.41 gram per vehicle mile (0.26 gram per vehicle kilometer).

(B) *Total Hydrocarbon Equivalent (for methanol-fueled Otto-cycle and diesel vehicles).* 0.41 gram per vehicle mile (0.26 gram per vehicle kilometer).

(ii) *Carbon monoxide.* 3.4 grams per vehicle mile (2.1 grams per vehicle kilometer).

(iii) *Oxides of nitrogen.* 1.0 gram per vehicle mile (0.63 gram per vehicle kilometer).

(iv) *Particulate (for diesel vehicles only).* (A) 0.20 gram per vehicle mile (0.12 gram per vehicle kilometer).

(B) A manufacturer may elect to include all or some of its diesel light-duty vehicle engine families in the appropriate particulate averaging program (petroleum or methanol), provided that vehicles produced for sale in California or in designated high-altitude areas may be averaged only within each of these areas. Averaging is not permitted between fuel types. If the manufacturer elects to average light-duty vehicles and light-duty trucks together in the appropriate particulate averaging program, its composite particulate standard applies to the combined set of light-duty vehicles and light-duty trucks included in the average and is calculated as defined in § 86.090–2.

(2) The standards set forth in paragraph (a)(1) of this section refer to the exhaust emitted over a driving schedule as set forth in subpart B of this part and measured and calculated in accordance with those procedures.

(b) Fuel evaporative emissions from 1990 and later model year light-duty vehicles shall not exceed (compliance with these standards is optional for 1990 model year methanol-fueled engines):

(1) *Hydrocarbons (for gasoline-fueled vehicles).* 2.0 grams per test.

(2) *Total Hydrocarbon Equivalent (for methanol-fueled vehicles).* 2.0 grams carbon per test.

(3) The standards set forth in paragraphs (b) (1) and (2) of this section refers to a composite sample of the fuel evaporative emissions collected under the conditions set forth in subpart B of this part and measured in accordance with those procedures.

(c) No crankcase emissions shall be discharged into the ambient atmosphere from any 1990 and later model year Otto-cycle or methanol-fueled diesel light-duty vehicle.

(d)–(f) [Reserved]

(g) Any 1990 and later model year light-duty vehicle that a manufacturer wishes to certify for sale shall meet the emission standards under both low- and high-altitude conditions as specified in § 86.082–2, except as provided in paragraphs (h) and (i) of this section. Vehicles shall meet emission standards under both low- and high-altitude conditions without manual adjustments or modifications. Any emission control device used to meet emission standards under high-altitude conditions shall initially actuate (automatically) no higher than 4,000 feet above sea level.

(h) The manufacturer may exempt 1990 and later model year vehicles from compliance at high altitude with the emission standards set forth in paragraphs (a) and (b) of this section if the vehicles are not intended for sale at high altitude and if the requirements of paragraphs (h) (1) and (2) of this section are met.

(1) A vehicle configuration shall only be considered eligible for exemption under paragraph (h) of this section if the requirements of either paragraph (h) (l) (i), (ii), (iii), or (iv) of this section are met.

(i) Its design parameters (displacement-to-weight ratio (D/W) and engine speed-to-vehicle-speed ratio (N/V)) fall within the exempted range for that manufacturer for that year. The exempted range is determined according to the following procedure:

(A) The manufacturer shall graphically display the D/W and N/V data of all vehicle configurations it will offer for the model year in question. The axis of the abscissa shall be D/W (where (D) is the engine displacement expressed in cubic centimeters and (W) is the equivalent vehicle test weight expressed in pounds), and the axis of the ordinate shall be N/V (where (N) is the crankshaft speed expressed in revolutions per minute and (V) is the vehicle speed expressed in miles per hour). At the manufacturer's option, either the 1:1 transmission gear ratio or the lowest numerical gear ratio available in the transmission will be used to determine N/V. The gear selection must be the same for all N/V data points on the manufacturer's graph. For each transmission/axle ratio combination, only

the lowest N/V value shall be used in the graphical display.

(B) The product line is then defined by the equation, $N/V=C(D/W)^{-0}$, where the constant, C, is determined by the requirement that all the vehicle data points either fall on the line or lie to the upper right of the line as displayed on the graphs.

(C) The exemption line is then defined by the equation, $N/V=C(0.84\ D/W)^{-0.9}$, where the constant, C is the same as that found in paragraph (h)(1)(i)(B) of this section.

(D) The exempted range includes all values of N/V and D/W which simultaneously fall to the lower left of the exemption line as drawn on the graph.

(ii) Its design parameters fall within the alternate exempted range for that manufacturer that year. The alternate exempted range is determined by substituting rated horsepower (hp) for displacement (D) in the exemption procedure described in paragraph (h)(1)(i) of this section and by using the product line $N/V=C(hp/W)^{-0.9}$.

(A) Rated horsepower shall be determined by using the Society of Automotive Engineers Test Procedure J 1349, or any subsequent version of that test procedure. Any of the horsepower determinants within that test procedure may be used, as long as it is used consistently throughout the manufacturer's product line in any model year.

(B) No exemptions will be allowed under paragraph (h)(1)(ii) of this section to any manufacturer that has exempted vehicle configurations as set forth in paragraph (h)(1)(i) of this section.

(iii) Its acceleration time (the time it takes a vehicle to accelerate from 0 miles per hour to a speed not less than 40 miles per hour and not greater than 50 miles per hour) under high-altitude conditions is greater than the largest acceleration time under low-altitude conditions for that manufacturer for that year. The procedure to be followed in making this determination is:

(A) The manufacturer shall list the vehicle configuration and acceleration time under low-altitude conditions of that vehicle configuration which has the highest acceleration time under low-altitude conditions of all the vehicle configurations it will offer for the model year in question. The manufacturer shall also submit a description of the methodology used to make this determination.

(B) The manufacturer shall then list the vehicle configurations and acceleration times under high-altitude conditions of all those vehicle configurations which have higher acceleration times under high-altitude conditions than the highest acceleration time at low altitude identified in paragraph (h)(1)(iii)(A) of this section.

(iv) In lieu of performing the test procedure of paragraphs (h)(1)(iii) (A) and (B) of this section, its acceleration time can be estimated based on the manufacturer's engineering evaluation, in accordance with good engineering practice, to meet the exemption criteria of paragraph (h)(1)(iii) of this section.

(2) A vehicle shall only be considered eligible for exemption under this paragraph if at least one configuration of its model type (and transmission configuration in the case of vehicles equipped with manual transmissions, excluding differences due to the presence of overdrive) is certified to meet emission standards under high-altitude conditions as specified in paragraph (a) through (g) of this section. The Certificate of Conformity (the Certificate) covering any exempted configuration(s) will also apply to the corresponding non-exempt configuration(s) required under this subparagraph. As a condition to the exemption, any suspension, revocation, voiding, or withdrawal of the Certificate as it applies to a non-exempt configuration for any reason will result in a suspension of the Certificate as it applies to the corresponding exempted configuration(s) of that model type, unless there is at least one other corresponding non-exempt configuration of the same model type still covered by the Certificate. The suspension of the Certificate as it applies to the exempted configuration(s) will be terminated when any one of the following occurs:

(i) Another corresponding non-exempt configuration(s) receive(s) coverage under the Certificate; or

(ii) Suspension of the Certificate as it applies to the corresponding non-exempt configuration(s) is terminated; or

(iii) The Agency's action(s), with respect to suspension, revocation, voiding or withdrawal of the Certificate as it applies to the corresponding non-exempt configuration(s), is reversed.

(3) The sale of a vehicle for principal use at a designated high-altitude location that has been exempted as set forth in paragraph (h) of this section will be considered a violation of Section 203(a)(1) of the Clean Air Act.

(i)(1) The manufacturers may exempt 1990 and later model year vehicles from compliance at low altitude with the emission standards set forth in paragraphs (a) and (b) of this section if the vehicles:

(i) Are not intended for sale at low altitude; and

(ii) Are equipped with a unique, high-altitude axle ratio (rear-wheel drive vehicles) or a unique, high-altitude drivetrain (front-wheel drive vehicles) with a higher N/V ratio than other configurations of that model type which are certified in compliance with the emission standards of paragraphs (a) and (b) of this section under low-altitude conditions.

(2) The sale of a vehicle for principal use at low altitude that has been exempted as set forth in paragraph (h)(1) of this section will be considered a violation of section 203(a)(1) of the Clean Air Act.

[54 FR 14461, Apr. 11, 1989]

§ 86.090–9 Emission standards for 1990 and later model year light-duty trucks.

(a)(1) The standards set forth in paragraphs (a) through (c) of this section shall apply to light-duty trucks sold for principal use at other than a designated high-altitude location. Exhaust emissions from 1990 and later model year light-duty trucks shall not exceed (compliance with these standards is optional for 1990 model year methanol-fueled vehicles):

(i)(A) *Hydrocarbons (for petroleum-fueled Otto-cycle and diesel light-duty trucks).* 0.80 gram per vehicle mile (0.50 gram per vehicle kilometer).

(B) *Total Hydrocarbon Equivalent (for methanol-fueled Otto-cycle and diesel light-duty trucks).* 0.80 gram per vehicle mile (0.50 gram per vehicle kilometer).

(ii) *Carbon monoxide.* (A) 10 grams per vehicle mile (6.2 grams per vehicle kilometer).

(B) 0.50 percent of exhaust gas flow at curb idle (for Otto-cycle and methanol-fueled diesel light-duty trucks only).

(iii) *Oxides of nitrogen.* (A) For light-duty trucks up to and including 3,750 lbs loaded vehicle weight, 1.2 grams per vehicle mile (0.75 gram per vehicle kilometer).

(B) For light-duty trucks greater loaded vehicle weight, 1.7 grams per vehicle mile (1.1 grams per vehicle kilometer).

(C) A manufacturer may elect to include all or some of its light-duty truck engine families in the NO_X averaging program, provided that trucks produced for sale in California or in designated high-altitude areas may be averaged only within each of those areas. Petroleum-fueled and methanol-fueled engine families may not be averaged together. Otto-cycle and diesel engines families also may not be averaged together. If the manufacturer elects to participate in the NO_X averaging program, individual family NO_X emission limits may not exceed 2.3 grams per mile. If the manufacturer elects to average together NO_X emissions of light-duty trucks subject to the standards of paragraphs (a)(1)(iii)(A) and (a)(1)(iii)(B) of this section, its composite NO_X standard applies to the combined fleets of light-duty trucks up to and including, and over, 3,750 lbs loaded vehicle weight included in the average and is calculated as defined in § 86.088–2.

(iv) *Particulate (for diesel light-duty trucks only).* (A) For light-duty trucks up to and including 3,750 lbs. loaded vehicle weight, 0.26 gram per vehicle mile (0.16 gram per vehicle kilometer).

(B) For light-duty trucks 3,751 lbs and greater loaded vehicle weight, 0.45 gram per vehicle mile (0.28 gram per vehicle kilometer).

(C) A manufacturer may elect to include all or some of its diesel light-duty truck engine families subject to the standard of paragraph (a)(1)(w)(A) of this section in the appropriate particulate averaging program (petroleum or methanol), provided that trucks produced for sale in California or in designated high-altitude areas may be

averaged only within each of those areas. Averaging is not permitted between fuel types. If the manufacturer elects to average both light-duty trucks subject to the standard of paragraph (a)(1)(w)(A) of this section and light-duty vehicles together in the appropriate particulate averaging program, its composite particulate standard applies to the combined set of light-duty vehicles and light-duty trucks included in the average and is calculated as defined in § 86.088–2.

(2) The standards set forth in paragraphs (a)(1)(i), (a)(1)(ii)(A), (a)(1)(iii), and (a)(1)(iv) of this section refer to the exhaust emitted over a driving schedule as set forth in subpart B of this part and measured and calculated in accordance with those procedures. The standard set forth in paragraph (a)(1)(ii)(B) of this section refers to the exhaust emitted at curb idle and measured and calculated in accordance with the procedures set forth in subpart P of this part.

(b) Fuel evaporative emissions from 1990 and later model year light-duty trucks shall not exceed (compliance with these standards is optional for 1990 model year methanol-fueled vehicles):

(1) *Hydrocarbons (for gasoline-fueled light-duty trucks).* 2.0 grams per test.

(2) *Total Hydrocarbon Equivalent (for methanol-fueled light-duty trucks).* 2.0 grams per test.

(3) The standards set forth in paragraphs (b) (1) and (2) of this section refer to a composite sample of the fuel evaporative emissions collected under the conditions set forth in subpart B of this part and measured in accordance with those procedures.

(c) No crankcase emissions shall be discharged into the ambient atmosphere from any 1990 and later model year light-duty truck.

(d)(1) Model year 1990 and later light-duty trucks sold for principal use at a designated high-altitude location shall be capable of meeting the following exhaust emission standards when tested under high-altitude conditions:

(i)(A) *Hydrocarbons (for petroleum-fueled Otto-cycle and diesel light-duty trucks).* 1.0 grams per vehicle mile (0.62 grams per vehicle kilometer).

(B) *Total Hydrocarbon Equivalent (for methanol-fueled Otto-cycle and diesel light-duty trucks).* 1.0 gram per vehicle mile (0.62 gram per vehicle kilometer).

(ii) *Carbon Monoxide.* (A) 14 grams per vehicle mile (8.7 grams per vehicle kilometer).

(B) 0.50 percent of exhaust gas flow at curb idle (for Otto-cycle and methanol-fueled diesel light-duty trucks only).

(iii) *Oxides of Nitrogen.* (A) For light-duty trucks up to and including 3,750 lbs loaded vehicle weight, 1.2 grams per vehicle mile (0.75 grams per vehicle kilometer).

(B) For light-duty trucks 3,751 lbs and greater loaded vehicle weight, 1.7 grams per vehicle mile (1.1 grams per vehicle kilometer).

(iv) *Particulate (for diesel light-duty trucks only).* For light-duty trucks up to and including 3,750 lbs loaded vehicle weight, 0.26 gram per vehicle mile (0.16 gram per vehicle kilometer).

(2) The standards set forth in paragraph (d)(1)(i), (d)(1)(ii)(A), (d)(1)(iii), and (d)(1)(iv) of this section refer to the exhaust emitted over a driving schedule as set forth in subpart B of this part and measured and calculated in accordance with those procedures. The standard set forth in paragraph (d)(1)(ii)(B) of this section refers to the exhaust emitted at curb idle and measured and calculated in accordance with the procedures set forth in subpart P of this part.

(e) Fuel evaporative emissions from 1990 and later model year light-duty trucks sold for principal use at a designated high-altitude location, when tested under high-altitude conditions, shall not exceed:

(1) *Hydrocarbons (for gasoline-fueled light-duty trucks).* 2.6 grams per test.

(2) *Total Hydrocarbon Equivalent (for methanol-fueled light-duty trucks).* 2.6 grams per test.

(3) The standards set forth in paragraphs (e) (1) and (2) of this section refer to a composite sample of the fuel evaporative emissions collected under the conditions set forth in subpart B of this part and measured in accordance with those procedures.

(f) No crankcase emissions shall be discharged into the ambient atmosphere from any 1990 and later model

year light-duty trucks sold for principal use at a designated high-altitude location.

(g)(1) Any light-duty truck that a manufacturer wishes to certify for sale at low altitude must be capable of meeting high-altitude emission standards (specified in paragraphs (d) through (f) of this section). The manufacturer may specify vehicle adjustments or modifications to allow the vehicle to meet high-altitude standards but these adjustments or modifications may not alter the vehicle's basic engine, inertia weight class, transmission configuration, and axle ratio.

(i) A manufacturer may certify unique configurations to meet the high-altitude standards but is not required to certify these vehicle configurations to meet the low-altitude standards.

(ii) Any adjustments or modifications that are recommended to be performed on vehicles to satisfy the requirements of paragraph (g)(1) of this section:

(A) Shall be capable of being effectively performed by commercial repair facilities, and

(B) Must be included in the manufacturer's application for certification.

(2) The manufacturer may exempt 1990 and later model year vehicles from compliance with the high-altitude emission standards set forth in paragraphs (d) and (e) of this section if the vehicles are not intended for sale at high altitude and if the following requirements are met. A vehicle configuration shall only be considered eligible for exemption if the requirements of either paragraph (g)(2) (i), (ii), (iii), or (iv) of this section are met.

(i) Its design parameters (displacement-to-weight ratio (D/W) and engine speed to-vehicle-speed ratio (N/V)) fall within the exempted range for that manufacturer for that year. The exempted range is determined according to the following procedure:

(A) The manufacturer shall graphically display the D/W and N/V data of all vehicle configurations it will offer for the model year in question. The axis of the abscissa shall be D/W (where (D) is the engine displacement expressed in cubic centimeters and (W) is the gross vehicle weight (GVW) expressed in pounds), and the axis of the ordinate shall be N/V (where (N) is the crankshaft speed expressed in revolutions per minute and (V) is the vehicle speed expressed in miles per hour). At the manufacturer's option, either the 1:1 transmission gear ratio or the lowest numerical gear ratio available in the transmission will be used to determine N-V. The gear selection must be the same for all N/V data points on the manufacturer's graph. For each transmission/axle ratio combination, only the lowest N/V value shall be used in the graphical display.

(B) The product line is then defined by the equation, $N/V = C(D/W)^{-0.9}$, where the constant, C, is determined by the requirement that all the vehicle data points either fall on the line or lie to the upper right of the line as displayed on the graphs.

(C) The exemption line is then defined by the equation, $N/V = C(0.84\ D/W)^{-0.9}$, where the constant, C is the same as that found in paragraph (g)(2)(i)(B) of this section.

(D) The exempted range includes all values of N/V and D/W which simultaneously fall to the lower left of the exemption line as drawn on the graph.

(ii) Its design parameters fall within the alternate exempted range for that manufacturer that year. The alternate exempted range is determined by substituting rated horsepower (hp) for displacement (D) in the exemption procedure described in paragraph (g)(2)(i) of this section and by using the product line $N/V = C(hp/W)^{-0.9}$.

(A) Rated horsepower shall be determined by using the Society of Automotive Engineers Test Procedure J 1349, or any subsequent version of that test procedure. Any of the horsepower determinants within that test procedure may be used, as long as it is used consistently throughout the manufacturer s product line in any model year.

(B) No exemptions will be allowed under paragraph (g)(2)(ii) of this section to any manufacturer that has exempted vehicle configurations as set forth in paragraph (g)(2)(i) of this section.

(iii) Its acceleration time (the time it takes a vehicle to accelerate from 0 to a speed not less than 40 miles per hour and not greater than 50 miles per hour)

under high-altitude conditions is greater than the largest acceleration time under low-altitude conditions for that manufacturer for that year. The procedure to be followed in making this determination is:

(A) The manufacturer shall list the vehicle configuration and acceleration time under low-altitude conditions of that vehicle configuration which has the highest acceleration time under low-altitude conditions of all the vehicle configurations it will offer for the model year in question. The manufacturer shall also submit a description of the methodology used to make this determination.

(B) The manufacturer shall then list the vehicle configurations and acceleration times under high-altitude conditions of all those vehicle configurations which have higher acceleration times under high-altitude conditions than the highest acceleration time at low altitude identified in paragraph (g)(2)(iii)(A) of this section.

(iv) In lieu of performing the test procedure of paragraph (g)(2)(iii) of this section, its acceleration time can be estimated based on the manufacturer's engineering evaluation, in accordance with good engineering practice, to meet the exemption criteria of paragraph (g)(2)(iii) of this section.

(3) The sale of a vehicle for principal use at a designated high-altitude location that has been exempted as set forth in paragraph (g)(2) of this section will be considered a violation of section 203(a)(1) of the Clean Air Act.

[52 FR 47865, Dec. 16, 1987, as amended at 54 FR 14462, Apr. 11, 1989]

§ 86.090–14 Small-volume manufacturers certification procedures.

(a) The small-volume manufacturers certification procedures described in paragraphs (b) and (c) of this section are optional. Small-volume manufacturers may use these optional procedures to demonstrate compliance with the general standards and specific emission requirements contained in this subpart.

(b)(1) The optional small-volume manufacturers certification procedures apply to light-duty vehicles, light-duty trucks, and heavy-duty engines produced by manufacturers with U.S. sales (for the model year in which certification is sought) of fewer than 10,000 units (light-duty vehicles, light-duty trucks, and heavy-duty engines combined).

(2) For the purpose of determining the applicability of paragraph (b)(1) of this section, where there is more than one importer or distributor of vehicles and/or engines manufactured by the same person, the sales the Administrator shall use shall be the aggregate of the projected or actual sales of those vehicles and/or engines by all of the importers and distributors.

(c) Small-volume manufacturers shall demonstrate compliance with the applicable sections of this subpart as follows:

(1) Sections 86.090–1, 86.088–2, 86.090–3, 86.084–4, 86.090–5, 86.078–6, 86.078–7, and 86.090–8 through 86.090–11 are applicable.

(2) Section 86.080–12 is not applicable.

(3) Sections 86.085–13, 86.090–14, 86.084–15, and 86.085–20 are applicable.

(4) Small-volume manufacturers shall include in its records all of the information that EPA requires in § 86.090–21. This information will be considered part of the manufacturer's application for certification. However, the manufacturer is not required to submit the information to the Administrator unless the Administrator requests it.

(5) Section 86.085–22 is applicable except as noted below.

(i) Small-volume light-duty vehicle and light-duty truck manufacturers may satisfy the requirements of paragraph (e) of § 86.085–22 by including a statement of compliance on adjustable parameters in the application for certification. In the statement of compliance the manufacturer shall state that the limits, stops, seals, or other means used to inhibit adjustment have been designed to accomplish their intended purpose based on good engineering practice and past experience. If the vehicle parameter is adjustable the vehicle must meet emission standards with the parameter set any place within the adjustable range (reference § 86.090–21).

(ii) Paragraphs (a), (b), (c), and (d) of § 86.085–22 are not applicable.

(6) Section 86.090–23 is applicable.

(7) Section 86.085–24 is applicable except as noted below.

(i) Small-volume manufacturers may satisfy the requirements of paragraphs (b) and (c) of § 86.085–24 by:

(A) Selecting emission-data test vehicles (engines) by the worst case emissions criteria as follows:

(*1*) *Light-duty vehicles and light-duty trucks.* The test vehicle shall be selected based on the following criteria: The manufacturer shall select the heaviest (including options) vehicle within the family. Then within that vehicle it shall select, in the order listed, the largest frontal area, largest displacement, the highest numerical axle ratio with the largest tire offered in the engine family, and the maximum fuel flow calibration.

(*2*) *Heavy-duty Otto-cycle engines.* The manufacturer shall select the worst case emission-data engine first based on the largest displacement within the engine family. Then within the largest displacement the manufacturer shall select, in the order listed, highest fuel flow at the speed of maximum rated torque, the engine with the most advance spark timing, no EGR or lowest EGR flow, and no air pump or lowest actual flow air pump.

(*3*) *Heavy-duty diesel engines.* The manufacturer shall select in each engine family the worst case emission data engine based on the highest fuel feed per stroke, primarily at the speed of maximum rated torque and secondarily at rated speed.

(B) Testing light-duty vehicle or light-duty truck emission-data vehicles at any service accumulation distance less than 6,436 kilometers (4,000 miles) or heavy-duty engine emission-data engines at any service accumulation time less than 125 hours.

(C) Using assigned deterioration factors that the Administrator determines and prescribes. However, the manufacturer may, at its option, accumulate miles (hours) on a durability-data vehicle (engine) and complete emission tests for the purpose of establishing its own deterioration factor.

(ii) Paragraphs (d) and (e) of § 86.085–24 are not applicable.

(8) Section 86.090–25 is applicable to durability-data light-duty vehicles, light-duty trucks, and heavy-duty engines if the manufacturer does not use assigned deterioration factors.

(9) Sections 86.084–26 and 86.085–27 are not applicable.

(10) Sections 86.090–28 and 86.090–29 are applicable.

(11)(i) Section 86.090–30 of this subpart is applicable, except for paragraphs (a)(2) and (b) of that section. In the place of these paragraphs, small-volume manufacturers shall comply with paragraphs (c)(11) (ii) through (v) of this section.

(ii) Small-volume manufacturers shall submit an application for certification containing the following:

(A) The names, addresses, and telephone numbers of the persons the manufacturer authorizes to communicate with us.

(B) A brief description of the vehicles (or engines) covered by the certificate (the manufacturers' sales data book or advertising, including specifications, may satisfy this requirement for most manufacturers). The description shall include, as a minimum, the following items as applicable:

(*1*) Engine families and vehicle (or engine) configurations.

(*2*) Vehicle or engine models to be listed on the certificate of conformity.

(*3*) The test weight and horsepower setting for each vehicle or engine configuration.

(*4*) Projected sales.

(*5*) Combustion cycle.

(*6*) Cooling mechanism.

(*7*) Number of cylinders.

(*8*) Displacement.

(*9*) Fuel system type.

(*10*) Number of catalytic converters, volume, and composition.

(*11*) Method of air aspiration.

(*12*) Thermal reactor characteristics.

(*13*) Suppliers' and/or manufacturer's name and model number of any emission-related items identified in paragraphs (c)(11)(ii)(B) (*1*) through (*12*) of this section, if purchased from a supplier or manufacturer who uses the items in its own certified vehicles(s) or engine(s).

(*14*) A list of emission component part numbers.

(*15*) Drawings, calibration curves, and descriptions of emission related components, including those components regulated under paragraph (e) of § 86.085–22, and schematics of hoses and other devices connecting these components.

(*16*) Vehicle adjustments or modifications necessary for light duty trucks to assure that they conform to high altitude standards.

(*17*) A description of the light-duty vehicles and light-duty trucks that are exempted from either the low- or high-altitude emission standards, as applicable.

(C) The results of all emission tests the manufacturer performs to demonstrate compliance with the applicable standards.

(D)(*1*) The following statement signed by the authorized representative of the manufacturer: ''The vehicles (or engines) described herein have been tested in accordance with [list of the applicable subparts A, B, D, I, N, or P] of part 86, title 40, United States Code of Federal Regulations, and on the basis of those tests are in conformance with that subpart. All of the data and records required by that subpart are on file and are available for inspection by the EPA Administrator. We project the total U.S. sales of vehicles (engines) subject to this subpart to be fewer than 10,000 units.''

(*2*) A statement as required by and contained in paragraph (c)(5) of § 86.090–14 signed by the authorized representative of the manufacturer.

(*3*) A statement that the vehicles or engines described in the manufacturers application for certification are not equipped with auxiliary emission control devices which can be classified as a defeat device as defined in § 86.084–2.

(*4*) A statement of compliance with section 206(a)(3) of the Clean Air Act.

(*5*) A statement that, based on the manufacturer's engineering evaluation and/or emission testing, the light-duty vehicles comply with emission standards at high altitude unless exempt under paragraph (h) of § 86.090–8.

(*6*) A statement that, based on the manufacturers engineering evaluation and/or emission testing, the light-duty trucks sold for principle use at designated high-altitude locations comply with the high-altitude emission requirements and that all other light-duty trucks are at least capable of being modified to meet high altitude standards unless exempt under paragraph (g)(2) of § 86.090–9.

(iii) If the manufacturer meets requirements of this subpart, the Administrator will issue a certificate of conformity for the vehicles described in the application for certification.

(iv) The certificate will be issued for such a period not to exceed one model year as the Administrator may determine and upon such terms as he may deem necessary to assure that any vehicle or engine covered by the certificate will meet the requirements of the Act and of this subpart.

(v)(A) If, after a review of the statements and descriptions submitted by the manufacturer, the Administrator determines that the manufacturer has not met the applicable requirements, the Administrator shall notify the manufacturer in writing, setting forth the basis for his determination. The manufacturer may request a hearing on the Administrator's determination.

(B) If the manufacturer does not request a hearing or present the required information the Administrator will deny certification.

(12) Sections 86.079–31 and 86.079–32 are not applicable

(13) Under § 86.079–33, small-volume manufacturers are covered by the following:

(i) Small-volume manufacturers may make production changes (running changes) without receiving the Administrator's prior approval. The manufacturer shall assure (by conducting emission tests as it deems necessary) that the affected vehicles (engines) remain in compliance with the requirements of this part.

(ii) The manufacturer shall notify the Administrator within seven days after implementing any production related change (running change) that would affect vehicle emissions. This notification shall include any changes to the information required under paragraph (c)(11)(ii) of this section. The manufacturer shall also amend as necessary its records required under paragraph (c)(4) of this section to conform with the production design change.

(14) Section 86.082–34 is not applicable.

(15) Sections 86.090–35, 86.079–36, 86.082–37, 86.087–38, and 86.084–39 are applicable.

[54 FR 14466, Apr. 11, 1989]

§ 86.090–21 Application for certification.

(a) A separate application for a certificate of conformity shall be made for each set of standards (or family emission limits, as appropriate) and each class of new motor vehicles or new motor vehicle engines. Such application shall be made to the Administrator by the manufacturer and shall be updated and corrected by amendment.

(b) The application shall be in writing, signed by an authorized representative of the manufacturer, and shall include the following:

(1)(i) Identification and description of the vehicles (or engines) covered by the application and a description of their engine (vehicles only), emission control system and fuel system components. This shall include a detailed description of each auxiliary emission control device (AECD) to be installed in or on any certification test vehicle (or certification test engine).

(ii)(A) The manufacturer shall provide to the Administrator in the application for certification:

(*1*) A list of those parameters which are physically capable of being adjusted (including those adjustable parameters for which access is difficult) and that, if adjusted to settings other than the manufacturer's recommended setting, may affect emissions;

(*2*) A specification of the manufacturer's intended physically adjustable range of each such parameter, and the production tolerances of the limits or stops used to establish the physically adjustable range;

(*3*) A description of the limits or stops used to establish the manufacturer's intended physically adjustable range of each adjustable parameter, or any other means used to inhibit adjustment;

(*4*) The nominal or recommended setting, and the associated production tolerances, for each such parameter.

(B) The manufacturer may provide, in the application for certification, information relating to why certain parameters are not expected to be adjusted in actual use and to why the physical limits or stops used to establish the physically adjustable range of each parameter, or any other means used to inhibit adjustment, are expected to be effective in preventing adjustment of parameters on in-use vehicles to settings outside the manufacturer's intended physically adjustable ranges. This may include results of any tests to determine the difficulty of gaining access to an adjustment or exceeding a limit as intended or recommended by the manufacturer.

(C) The Administrator may require to be provided detailed drawings and descriptions of the various emission related components, and/or hardware samples of such components, for the purpose of making his determination of which vehicle or engine parameter will be subject to adjustment for new certification and Selective Enforcement Audit testing and of the physically adjustable range for each such vehicle or engine parameter.

(2) Projected U.S. sales data sufficient to enable the Administrator to select a test fleet representative of the vehicles (or engines) for which certification is requested. The sales data shall also include the altitude of intended sale for light-duty trucks.

(3) A description of the test equipment and fuel proposed to be used.

(4)(i) For light-duty vehicles and light duty trucks, a description of the test procedures to be used to establish the evaporative emission deterioration factors required to be determined and supplied in § 86.090–23(b)(2).

(ii) For heavy duty vehicles equipped with gasoline-fueled or methanol-fueled engines, the Administrator does not assume that each evaporative emission family-evaporative emission control system combination will deteriorate in a unique manner during the useful life of the vehicle. The manufacturer shall therefore identify those evaporative emission deterioration factors which shall be applied to the various evaporative emission family-evaporative emission control system combinations which are expected to exhibit similar deterioration characteristics during the useful life of the vehicle.

(iii)(A) A description of the test procedures to be used to establish the durability data or the exhaust emission deterioration factors required to be determined and supplied in § 86.088–23(b)(1).

(B)(*1*) For engine families provided an alternative useful-life period under paragraph (f) of this section, a statement of that alternative period and a brief synopsis of the justification.

(*2*) For heavy-duty diesel engine families, a statement of the primary intended service class (light, medium, or heavy) and an explanation as to why that service class was selected. Each diesel engine family shall be certified under one primary intended service class only. After reviewing the guidance in § 86.085–2, the class shall be determined on the basis of which class best represents the majority of the sales of that engine family.

(C)(*1*) A statement of recommended maintenance and procedures necessary to assure that the vehicles (or engines) covered by a certificate of conformity in operation conform to the regulations, and a description of the program for training of personnel for such maintenance, and the equipment required.

(*2*) A description of vehicle adjustments or modifications necessary, if any, to assure that light-duty vehicles and light-duty trucks covered by a certificate of conformity conform to the regulations while being operated at any altitude locations, and a statement of the altitude at which the adjustments or modifications apply.

(D) At the option of the manufacturer, the proposed composition of the emission-data test fleet or (where applicable) the durability-data test fleet.

(5)(i)(A) If the manufacturer elects to participate in the particulate averaging program for diesel light-duty vehicles and/or diesel light-duty trucks, the application must list the family particulate emission limit and the projected U.S. production volume of the family for the model year.

(B) The manufacturer shall choose the level of the family particulate emission limits, accurate to one-hundredth of a gram per mile.

(C) The manufacturer may at any time during production elect to change the level of any family diesel particulate emission limit(s) by submitting the new limit(s) to the Administrator and by demonstrating compliance with the limit(s) as described in § 86.085–2 and § 86.088–28(b)(5)(i).

(ii)(A) If the manufacturer elects to participate in the NO_X averaging program for light-duty trucks, the application must list the family NO_X emission limit and the projected U.S. production volume of the family for the model year.

(B) The manufacturer shall choose the level of the family NO_X emission limits, accurate to one-tenth of a gram per mile.

(C) The manufacturer may at any time during production elect to change the level of any family NO_X emission limit(s) by submitting the new limits to the Administrator and by demonstrating compliance with the limit(s) as described in § 86.088–2 and § 86.088–28(b)(5)(ii).

(iii) If the manufacturer elects to participate in any of the particulate and/or the NO_X banking programs for heavy-duty engines, the application must list the information required in §§ 86.091–15 and 86.090–23.

(6)(i) For Otto-cycle heavy-duty engines, the application must state whether the engine family is being certified for use in all vehicles regardless of their Gross Vehicle Weight Rating (see § 86.088–10 (a)(1)(i) and (a)(3)(i)), or, only for use in vehicles with a Gross Vehicle Weight Rating greater than 14,000 pounds.

(ii) If the engine family is being certified for use in all vehicles and, is being certified to the emission standards applicable to Otto-cycle heavy-duty engines for use only in vehicles with a Gross Vehicle Weight Rating over 14,000 pounds under the provisions of paragraph (a)(3) of § 86.088–10, then the application must also attest that the engine family, together with all other engine families being certified under the provisions of paragraph (a)(3) of § 86.088–10, represent no more than 5 percent of model year sales of the manufacturer of all Otto-cycle heavy duty engines for use in vehicles with Gross Vehicle Weight Ratings of up to 14,000 pounds.

(iii)(A) A description of the test procedures to be used to establish the durability data or the exhaust emission deterioration factors required to be determined and supplied in § 86.088–23(b)(1).

(B)(*1*) A statement of the useful life of use of each light-duty truck engine family and heavy-duty engine family.

(*2*) For engine families provided an alternative useful life period under paragraph (f) of this section, a statement of that alternative period and a brief synopsis of the justification.

(*3*) For heavy-duty diesel engine families, a statement of the primary intended service class (light, medium, or heavy) and an explanation as to why that service class was selected. Each diesel engine family shall be certified under one primary intended service class only. After reviewing the guidance in § 86.085–2, the class shall be determined on the basis of which class best represents the majority of the sales of that engine family.

(7) For each light-duty vehicle engine family, a statement of recommended maintenance and procedures necessary to assure that the vehicles (or engines) covered by a certificate of conformity in operation conform to the regulations, and a description of the program for training of personnel for such maintenance and the equipment required.

(8) For each light-duty vehicle engine family, the proposed composition of the emission-data test fleet and the durability-data test fleet.

(c) Complete copies of the application and of any amendments thereto, and all notifications under § 86.079–32, § 86.079–33, and § 86.082–84 shall be submitted in such multiple copies as the Administrator may require.

(d) Incomplete light-duty trucks shall have a maximum completed curb weight and maximum completed frontal area specified by the manufacturer.

(e) For vehicles equipped with gasoline-fueled or methanol-fueled heavy-duty engines, the manufacturer shall specify a maximum nominal fuel tank capacity for each evaporative emission family-evaporative emission control system combination.

(f) Light-duty truck and heavy-duty engine manufacturers who believe that the useful life periods of § 86.085–2 are significantly unrepresentative for one or more engine families (either too long or too short), may petition the Administrator to provide an alternative useful-life period. This petition must include the full rationale behind the request together with any supporting data and other evidence. Based on this or other information the Administrator may assign an alternative useful-life period. Any petition should be submitted in a timely manner, to allow adequate time for a thorough evaluation.

[54 FR 14468, Apr. 11, 1989, as amended at 55 FR 30618, July 26, 1990]

§ 86.090–22 Approval of application for certification; test fleet selections; determinations of parameters subject to adjustment for certification and Selective Enforcement Audit, adequacy of limits, and physically adjustable ranges.

(a) After a review of the application for certification and any other information which the Administrator may require, the Administrator may approve the application and select a test fleet in accordance with § 86.090–24.

(b) The Administrator may disapprove in whole or in part an application for certification for reasons including incompleteness, inaccuracy, inappropriate proposed mileage (or service) accumulation procedures, test equipment, or fuel, and incorporation of defeat devices in vehicles (or on engines) described by the application.

(c) Where any part of an application is rejected, the Administrator shall notify the manufacturer in writing and set forth the reasons for such rejection. Within 30 days following receipt of such notification, the manufacturer may request a hearing on the Administrator's determination. The request shall be in writing, signed by an authorized representative of the manufacturer and shall include a statement specifying the manufacturer's objections to the Administrator's determinations, and data in support of such objections. If, after the review of the request and supporting data, the Administrator finds that the request raises a substantial factual issue, he shall provide the manufacturer a hearing in accordance with § 86.078–6 with respect to such issue.

(d)(1) The Administrator does not approve the test procedures for establishing the evaporative emission deterioration factors for light-duty vehicles

and light-duty trucks. The manufacturer shall submit the procedures as required in § 86.090–21(b)(4)(i) prior to the Administrator's selection of the test fleet under § 86.090–24(b)(1) and if such procedures will involve testing of durability-data vehicles selected by the Administrator or elected by the manufacturer under § 86.090–24(c)(1), prior to initiation of such testing.

(2) *Light-duty trucks and heavy-duty engines only*. The Administrator does not approve the test procedures for establishing exhaust emission deterioration factors. The manufacturer shall submit these procedures and determinations as required in § 86.090–21(b)(4)(iii) prior to determining the deterioration factors.

(3) *Heavy-duty vehicles equipped with gasoline-fueled or methanol-fueled engines only*. The Administrator does not approve the test procedures for establishing the evaporative emission deterioration factors. The test procedure will conform to the requirements in § 86.090–23(b)(3).

(e) When the Administrator selects emission-data vehicles for the test fleet, he will at the same time determine those vehicle or engine parameters which will be subject to adjustment for certification, Selective Enforcement Audit and Production Compliance Audit testing, the adequacy of the limits, stops, seals, or other means used to inhibit adjustment, and the resulting physically adjustable ranges for each such parameter and notify the manufacturer of his determinations.

(1)(i) Except as noted in paragraph (e)(1)(iv) of this section, the Administrator may determine to be subject to adjustment the idle fuel-air mixture parameter on Otto-cycle vehicles (or engines) (carbureted or fuel-injected); the choke valve action parameter(s) on carbureted, Otto-cycle vehicles (or engines); or any parameter on any vehicle (or engine) (Otto-cycle or diesel) which is physically capable of being adjusted, may significantly affect emissions, and was not present on the manufacturer's vehicles (or engines) in the previous model year in the same form and function.

(ii) The Administrator may, in addition, determine to be subject to adjustment any other parameters on any vehicle or engine which is physically capable of being adjusted and which may significantly affect emissions. However, the Administrator may do so only if he has previously notified the manufacturer that he might do so and has found, at the time he gave this notice, that the intervening period would be adequate to permit the development and application of the requisite technology, giving appropriate consideration to the cost of compliance within such period. In no event will this notification be given later than September 1 of the calendar year two years prior to the model year.

(iii) In determining the parameters subject to adjustment the Administrator will consider the likelihood that, for each of the parameters listed in paragraphs (e)(1)(i) and (e)(1)(ii) of this section, settings other than the manufacturer's recommended setting will occur on in-use vehicles (or engines). In determining likelihood, the Administrator may consider such factors as, but not limited to, information contained in the preliminary application, surveillance information from similar in-use vehicles (or engines), the difficulty and cost of gaining access to an adjustment, damage to the vehicle (or engine) if an attempt is made to gain such access and the need to replace parts following such attempt, and the effect of settings other than the manufacturer's recommended setting on vehicle (or engine) performance characteristics including emission characteristics.

(iv) Manual chokes of heavy-duty engines only will not be considered a parameter subject to adjustment under the parameter adjustment requirements.

(2)(i) The Administrator shall determine a parameter to be adequately inaccessible or sealed if:

(A) In the case of an idle mixture screw, the screw is recessed within the carburetor casting and sealed with lead, thermosetting plastic, or an inverted elliptical spacer or sheared off after adjustment at the factory, and the inaccessibility is such that the screw cannot be accessed and/or adjusted with simple tools in one-half hour or for $20 (1978 dollars) or less.

(B) In the case of a choke bimetal spring, the plate covering the bimetal spring is riveted or welded in place, or held in place with nonreversible screws.

(C) In the case of a parameter which may be adjusted by elongating or bending adjustable members (e.g., the choke vacuum break), the elongation of the adjustable member is limited by design or, in the case of a bendable member, the member is constructed of a material which when bent would return to its original shape after the force is removed (plastic or spring steel materials).

(D) In the case of any parameter, the manufacturer demonstrates that adjusting the parameter to settings other than the manufacturer's recommended setting takes more than one-half hour or costs more than $20 (1978 dollars).

(ii) The Administrator shall determine a physical limit or stop to be an adequate restraint on adjustability if:

(A) In the case of a threaded adjustment, the threads are terminated, pinned or crimped so as to prevent additional travel without breakage or need for repairs which take more than one-half hour or cost more than $20 (1978 dollars).

(B) The adjustment is ineffective at the end of the limits of travel regardless of additional forces or torques applied to the adjustment.

(C) The manufacturer demonstrates that travel or rotation limits cannot be exceeded with the use of simple and inexpensive tools (screwdriver, pliers, open-end or box wrenches, etc.) without incurring significant and costly damage to the vehicle (or engine) or control system or without taking more than one-half hour or costing more than $20 (1978 dollars).

(iii) If manufacturer service manuals or bulletins describe routine procedures for gaining access to a parameter or for removing or exceeding a physical limit, stop, seal or other means used to inhibit adjustment, or if surveillance data indicate that gaining access, removing, or exceeding is likely, paragraphs (e)(2)(i) and (e)(2)(ii) of this section shall not apply for that parameter.

(iv) In determining the adequacy of a physical limit, stop, seal, or other means used to inhibit adjustment of a parameter not covered by paragraph (e)(2)(i) or (e)(2)(ii) of this section, the Administrator will consider the likelihood that it will be circumvented, removed, or exceeded on in-use vehicles. In determining likelihood, the Administrator may consider such factors as, but not limited to, information contained in the preliminary application; surveillance information from similar in-use vehicles (or engines); the difficulty and cost of circumventing, removing, or exceeding the limit, stop, seal, or other means; damage to the vehicle (or engine) if an attempt is made to circumvent, remove, or exceed it and the need to replace parts following such attempt; and the effect of settings beyond the limit, stop, seal, or other means on vehicle (or engine) performance characteristics other than emission characteristics.

(3) The Administrator shall determine two physically adjustable ranges for each parameter subject to adjustment:

(i)(A) In the case of a parameter determined to be adequately inaccessible or sealed, the Administrator may include within the physically adjustable range applicable to testing under this subpart (certification testing) all settings within the production tolerance associated with the nominal setting for that parameter, as specified by the manufacturer in the preliminary application for certification.

(B) In the case of other parameters, the Administrator shall include within this range all settings within physical limits or stops determined to be adequate restraints on adjustability. The Administrator may also include the production tolerances on the location of these limits or stops when determining the physically adjustable range.

(ii)(A) In the case of a parameter determined to be adequately inaccessible or sealed, the Administrator shall include within the physically adjustable range applicable to testing under subpart G or K (Selective Enforcement Audit and Production Compliance Audit) only the actual settings to which the parameter is adjusted during production.

(B) In the case of other parameters, the Administrator shall include within this range all settings within physical limits or stops determined to be adequate restraints on adjustability, as they are actually located on the test vehicle (or engine).

(f)(1) If the manufacturer submits the information specified in § 86.090–21(b)(1)(ii) in advance of its full preliminary application for certification, the Administrator shall review the information and make the determinations required in paragraph (e) of this section within 90 days of the manufacturer's submittal.

(2) The 90-day decision period is exclusive of the elapsed time during which EPA may request additional information from manufacturers regarding an adjustable parameter and the receipt of the manufacturers' response(s).

(g) Within 30 days following receipt of notification of the Administrator's determinations made under paragraph (e) of this section, the manufacturer may request a hearing on the Administrator's determinations. The request shall be in writing, signed by an authorized representative of the manufacturer, and shall include a statement specifying the manufacturer's objections to the Administrator's determinations, and data in support of such objections. If, after review of the request and supporting data, the Administrator finds that the request raises a substantial factual issue, he shall provide the manufacturer a hearing in accordance with § 86.078–6 with respect to such issue.

[54 FR 14470, Apr. 11, 1989]

§ 86.090–24 Test vehicles and engines.

(a)(1) The vehicles or engines covered by an application for certification will be divided into groupings of engines which are expected to have similar emission characteristics throughout their useful life. Each group of engines with similar emission characteristics shall be defined as a separate engine family.

(2) To be classed in the same engine family, engines must be identical in all the following respects:

(i) The cylinder bore center-to-center dimensions.

(ii)–(iii) [Reserved]

(iv) The cylinder block configuration (air cooled or water cooled; L–6, 90° V–8, etc.).

(v) The location of the intake and exhaust valves (or ports).

(vi) The method of air aspiration.

(vii) The combustion cycle.

(viii) Catalytic converter characteristics.

(ix) Thermal reactor characteristics.

(x) Type of air inlet cooler (*e.g.*, intercoolers and after-coolers) for diesel heavy-duty engines.

(3)(i) Engines identical in all the respects listed in paragraph (a)(2) of this section may be further divided into different engine families if the Administrator determines that they may be expected to have different emission characteristics. This determination will be based upon a consideration of the following features of each engine:

(A) The bore and stroke.

(B) The surface-to-volume ratio of the nominally dimensioned cylinder at the top dead center positions.

(C) The intake manifold induction port size and configuration.

(D) The exhaust manifold port size and configuration.

(E) The intake and exhaust valve sizes.

(F) The fuel system.

(G) The camshaft timing and ignition or injection timing characteristics.

(ii) Light-duty trucks and heavy-duty engines produced in different model years and distinguishable in the respects listed in paragraph (a)(2) of this section shall be treated as belonging to a single engine family if the Administrator requires it, after determining that the engines may be expected to have similar emission deterioration characteristics.

(4) Where engines are of a type which cannot be divided into engine families based upon the criteria listed in paragraphs (a)(2) and (a)(3) of this section, the Administrator will establish families for those engines based upon those features most related to their emission characteristics. Engines that are eligible to be included in the same engine family based on the criteria in paragraphs (a)(2) and (a)(3)(i) of this section may be further divided into different engine families if the manufacturer determines that they may be expected to

have different emission characteristics. This determination will be based upon a consideration of the following features of each engine:

(i) The dimension from the center line of the crankshaft to the center line of the camshaft.

(ii) The dimension from the center line of the crankshaft to the top of the cylinder block head face.

(iii) The size of the intake and exhaust valves (or ports).

(5) Gasoline-fueled and methanol-fueled light-duty vehicles and light-duty trucks covered by an application for certification will be divided into groupings which are expected to have similar evaporative emission characteristics throughout their useful life. Each group of vehicles with similar evaporative emission characteristics shall be defined as a separate evaporative emission family.

(6) For gasoline-fueled or methanol-fueled light-duty vehicles and light-duty trucks to be classed in the same evaporative emission family, vehicles must be similar with respect to:

(i) Type of vapor storage device (*e.g.*, canister, air cleaner, crankcase).

(ii) Basic canister design.

(iii) Fuel system.

(7) Where vehicles are of a type which cannot be divided into evaporative emission families based on the criteria listed above, the Administrator will establish families for those vehicles based upon the features most related to their evaporative emission characteristics.

(8)(i) If the manufacturer elects to participate in the Alternative Durability Program, the engine families covered by an application for certification shall be grouped based upon similar engine design and emission control system characteristics. Each of these groups shall constitute a separate engine family group.

(ii) To be classed in the same engine family group, engine families must contain engines identical in all of the following respects:

(A) The combustion cycle.

(B) The cylinder block configuration (air-cooled or water-cooled; L–6, V–8, rotary, etc.).

(C) Displacement (engines of different displacement within 50 cubic inches or 15 percent of the largest displacement and contained within a multidisplacement engine family will be included in the same engine family group).

(D) Catalytic converter usage and basic type (noncatalyst, oxidation catalyst only, three-way catalyst equipped).

(9) Engine families identical in all respects listed in paragraph (a)(8) of this section may be further divided into different engine family groups if the Administrator determines that they are expected to have significantly different exhaust emission control system deterioration characteristics.

(10) A manufacturer may request the Administrator to include in an engine family group, engine families in addition to those grouped under the provisions of paragraph (a)(8) of this section. This request must be accompanied by information the manufacturer believes supports the inclusion of these additional engine families.

(11) A manufacturer may combine into a single engine family group those light-duty vehicle and light-duty truck engine families which otherwise meet the requirements of paragraphs (a)(8) through (a)(10) of this section.

(12) The vehicles covered by an application for certification equipped with gasoline-fueled or methanol-fueled heavy-duty engines will be divided into groupings of vehicles on the basis of physical features which are expected to affect evaporative emissions. Each group of vehicles with similar features shall be defined as a separate evaporative emission family.

(13) For vehicles equipped with gasoline-fueled or methanol-fueled heavy-duty engines to be classed in the same evaporative emission family, vehicles must be identical with respect to:

(i) Method of fuel/air metering (*i.e.*, carburetion versus fuel injection).

(ii) Carburetor bowl fuel volume, within a 10 cc range.

(14) For vehicles equipped with gasoline-fueled or methanol-fueled heavy-duty engines to be classed in the same evaporative emission control system, vehicles must be identical with respect to:

(i) Method of vapor storage.

(ii) Method of carburetor sealing.

(iii) Method of air cleaner sealing.

(iv) Vapor storage working capacity, within a 20 g range.

(v) Number of storage devices.

(vi) Method of purging stored vapors.

(vii) Method of venting the carburetor during both engine off and engine operation.

(viii) Liquid fuel hose material.

(ix) Vapor storage material.

(15) Where vehicles equipped with gasoline-fueled or methanol-fueled heavy-duty engines are types which cannot be divided into evaporative emission family-control system combinations based on the criteria listed above, the Administrator will establish evaporative emission family-control system combinations for those vehicles based on features most related to their evaporative emission characteristics.

(16) No 1990 or later model year heavy-duty engine which is to be used to generate emission credits for 1991 and later banking, trading and averaging programs may also utilize nonconformance penalties (NCPs). Use of an NCP thus becomes an engine family criterion.

(i) Use of either a NO_X or a particulate matter NCP by an engine family precludes that family from generating both NO_X and particulate matter emission credits.

(ii) If a manufacturer desires to use both banked credits and NCPs on an engine family, two separate engine families must be established. One engine family must consist of engines certified for only credit use following the procedure specified in this subpart. The other engine family must be certified for only NCP use following the procedure as specified in 40 CFR part 86, subpart L.

(17) Any 1990 or later model year urban bus engines which are to be used to generate PM credits for the 1991 and later model year urban bus PM standard shall be placed in separate engine families for certification purposes and the families shall be clearly designated as such in the application. Urban bus engines of different basic design will not be in the same family. If a manufacturer certifies two or more different urban bus engines these shall be in different engine families.

(b) *Emission data*—(1) *Emission-data vehicles.* Paragraph (b)(1) of this section applies to light-duty vehicle and light-duty truck emission-data vehicles.

(i) Vehicles will be chosen to be operated and tested for emission data based upon engine family groupings. Within each engine family, one test vehicle will be selected based on the following criteria: The Administrator shall select the vehicle with the heaviest equivalent test weight (including options) within the family. Then within that vehicle the Administrator shall select, in the order listed, the highest road-load power, largest displacement, the transmission with the highest numerical final gear ratio (including overdrive), the highest numerical axle ratio offered in that engine family and the maximum fuel flow calibration.

(ii) The Administrator shall select one additional test vehicle from within each engine family. The vehicle selected shall be the vehicle expected to exhibit the highest emissions of those vehicles remaining in the engine family. If all vehicles within the engine family are similar the Administrator may waive the requirements of this paragraph.

(iii) Within an engine family and exhaust emission control system, the manufacturer may alter any emission-data vehicle (or other vehicles such as including current or previous model year emission-data vehicles, fuel economy data vehicles, and development vehicles provided they meet emission-data vehicles, protocol) to represent more than one selection under paragraphs (b)(1) (i), (ii), (iv), or (vii) of this section.

(iv) If the vehicles selected in accordance with paragraphs (b)(1) (i) and (ii) of this section do not represent each engine-system combination, then one vehicle of each engine-system combination not represented will be selected by the Administrator. The vehicle selected shall be the vehicle expected to exhibit the highest emissions of those vehicles remaining in the engine family.

(v) For high-altitude exhaust emission compliance for each engine family, the manufacturer shall follow one of the following procedures:

(A) The manufacturer will select for testing under high-altitude conditions the vehicle expected to exhibit the highest emissions from the nonexempt vehicles selected in accordance with § 86.090–24(b)(1) (ii), (iii), and (iv) of this section or,

(B) In lieu of testing vehicles according to paragraph (b)(1)(v)(A) of this section, a manufacturer may provide a statement in its application for certification that, based on the manufacturer's engineering evaluation of such high-altitude emission testing as the manufacturer deems appropriate,

(*1*) That all light-duty vehicles not exempt under § 86.090–8(h) comply with the emission standards at high-altitude, and

(*2*) That light-duty trucks sold for principal use at designated high-altitude locations comply with the high-altitude emission requirements, and that all light-duty trucks sold at low-altitude, which are not exempt under § 86.090–9(g)(2), are capable of being modified to meet high-altitude standards.

(vi) If 90 percent or more of the engine family sales will be in California, a manufacturer may substitute emission-data vehicles selected by the California Air Resources Board criteria for the selections specified in paragraphs (b)(1) (i), (ii), and (iv) of this section.

(vii)(A) Vehicles of each evaporative emission family will be divided into evaporative emission control systems.

(B) The Administrator will select the vehicle expected to exhibit the highest evaporative emissions, from within each evaporative family to be certified, from among the vehicles represented by the exhaust emission-data selections for the engine family, unless evaporative testing has already been completed on the vehicle expected to exhibit the highest evaporative emissions for the evaporative family as part of another engine family's testing.

(C) If the vehicles selected in accordance with paragraph (b)(1)(vii)(B) of this section do not represent each evaporative emission control system then the Administrator will select the highest expected evaporative emission vehicle from within the unrepresented evaporative system.

(viii) For high-altitude evaporative emission compliance for each evaporative emission family, the manufacturer shall follow one of the following procedures:

(A) The manufacturer will select for testing under high-altitude conditions the one nonexempt vehicle previously selected under paragraphs (b)(1)(vii) (B) or (C) of this section which is expected to have the highest level of evaporative emissions when operated at high altitude or

(B) In lieu of testing vehicles according to paragraph (b)(1)(viii)(A) of this section, a manufacturer may provide a statement in its application for certification that based on the manufacturer's engineering evaluation of such high-altitude emission testing as the manufacturer deems appropriate,

(*1*) That all light-duty vehicles not exempt under § 86.090–8(h) comply with the emission standards at high altitude and

(*2*) That light-duty trucks sold for principal use at designated high-altitude locations comply with the high-altitude emission requirements, and that all light-duty trucks sold at low altitude, which are not exempt under § 86.090–9(g)(2), are capable of being modified to meet high-altitude standards.

(ix) Vehicles selected under paragraph (b)(1)(v)(A) of this section may be used to satisfy the requirements of (b)(1)(viii)(A) of this section.

(x) *Light-duty trucks only:* (A) The manufacturer may reconfigure any of the low-altitude emission-data vehicles to represent the vehicle configuration required to be tested at high altitude.

(B) The manufacturer is not required to test the reconfigured vehicle at low altitude.

(2) *Otto-cycle heavy-duty emission-data engines.* Paragraph (b)(2) of this section applies to Otto-cycle heavy-duty engines.

(i)–(ii) [Reserved]

(iii) The Administrator shall select a maximum of two engines within each engine family based upon features indicating that they may have the highest emission levels of the engines in the engine family as follows:

(A) The Administrator shall select one emission-data engine first based on

the largest displacement within the engine family. Then within the largest displacement the Administrator shall select, in the order listed, highest fuel flow at the speed of maximum rated torque, the engine with the most advanced spark timing, no EGR or lowest EGR flow, and no air pump or lowest actual flow air pump.

(B) The Administrator shall select one additional engine, from within each engine family. The engine selected shall be the engine expected to exhibit the highest emissions of those engines remaining in the engine family. If all engines within the engine family are similar the Administrator may waive the requirements of this paragraph.

(iv) If the engines selected in accordance with paragraphs (b)(2) (ii) and (iii) of this section do not represent each engine displacement-exhaust emission control system combination, then one engine of each engine displacement-exhaust emission control system combination not represented shall be selected by the Administrator.

(v) Within an engine family/displacement/control system, the manufacturer may alter any emission-data engine (or other engine including current or previous model year emission-data vehicles and development engines provided they meet the emission-data engines protocol) to represent more than one selection under paragraphs (b)(2)(iii) of this section.

(3) *Diesel heavy-duty emission-data engines.* Paragraph (b)(3) of this section applies to diesel heavy-duty emission-data vehicles.

(i) Engines will be chosen to be run for emission data based upon engine family groupings. Within each engine family, the requirements of this paragraph must be met.

(ii) Engines of each engine family will be divided into groups based upon their exhaust emission control systems. One engine of each engine system combination shall be run for smoke emission data (diesel engines only) and gaseous emission data. Either the complete gaseous emission test or the complete smoke test may be conducted first. Within each combination, the engine that features the highest fuel feed per stroke, primarily at the speed of maximum rated torque and secondarily at rated speed, will usually be selected. If there are military engines with higher fuel rates than other engines in the same engine system combinations, then one military engine shall also be selected. The engine with the highest fuel feed per stroke will usually be selected.

(iii) The Administrator may select a maximum of one additional engine within each engine-system combination based upon features indicating that it may have the highest emission levels of the engines of that combination. In selecting this engine, the Administrator will consider such features as the injection system, fuel system, compression ratio, rated speed, rated horsepower, peak torque speed, and peak torque.

(iv) Within an engine family control system combination, the manufacturer may alter any emission-data engine (or other engine including current or previous model year emission-data vehicles and development engines provided they meet the emission-data engines' protocol) to represent more than one selection under paragraphs (b)(3) (ii) and (iii) of this section.

(c) *Durability data*—(1) *Light-duty vehicle durability-data vehicles.* Paragraph (c)(1) of this section applies to light-duty vehicle durability-data vehicles.

(i) A durability-data vehicle will be selected by the Administrator to represent each engine-system combination. The vehicle selected shall be of the engine displacement with the largest projected sales volume of vehicles with that control-system combination in that engine family and will be designated by the Administrator as to transmission type, fuel system, inertia weight class, and test weight.

(ii) A manufacturer may elect to operate and test additional vehicles to represent any engine-system combination. The additional vehicles must be of the same engine displacement, transmission type, fuel system and inertia weight class as the vehicle selected for that engine-system combination in accordance with the provisions of paragraph (c)(1)(i) of this section. Notice of an intent to operate and test additional vehicles shall be given to the Administrator no later than 30

days following notification of the test fleet selection.

(2) *Light-duty trucks.* Paragraph (c)(2) of this section applies to vehicles, engines, subsystems, or components used to establish exhaust emission deterioration factors for light-duty trucks.

(i) The manufacturer shall select the vehicles, engines, subsystems, or components to be used to determine exhaust emission deterioration factors for each engine-family control system combination. Whether vehicles, engines, subsystems, or components are used, they shall be selected so that their emissions deterioration characteristics may be expected to represent those of in-use vehicles, based on good engineering judgment.

(ii) [Reserved]

(3) *Heavy-duty engines.* Paragraph (c)(3) of this section applies to engines, subsystems, or components used to establish exhaust emission deterioration factors for heavy-duty engines.

(i) The manufacturer shall select the engines, subsystems, or components to be used to determine exhaust emission deterioration factors for each engine-family control system combination. Whether engines, subsystems, or components are used, they shall be selected so that their emissions deterioration characteristics may be expected to represent those of in-use engines, based on good engineering judgment.

(ii) [Reserved]

(d) For purposes of testing under § 86.084–26 (a)(9) or (b)(11), the Administrator may require additional emission-data vehicles (or emission-data engines) and durability-data vehicles (light-duty vehicles only) identical in all material respects to vehicles (or engines) selected in accordance with paragraphs (b) and (c) of this section, *provided* that the number of vehicles (or engines) selected shall not increase the size of either the emission-data fleet or the durability-data fleet by more than 20 percent or one vehicle (or engine), whichever is greater.

(e)(1) Any manufacturer whose projected sales for the model year in which certification is sought is less than:

(i) 2,000 Otto-cycle light-duty vehicles, or

(ii) 2,000 diesel light-duty vehicles, or

(iii) 2,000 Otto-cycle light-duty trucks, or

(iv) 2,000 diesel light-duty trucks, or

(v) 2,000 Otto-cycle heavy-duty engines, or

(vi) 2,000 diesel heavy-duty engines, may request a reduction in the number of test vehicles (or engines) determined in accordance with the foregoing provisions of this section. The Administrator may agree to such lesser number as he determines would meet the objectives of this procedure.

(2) Any manufacturer may request to certify engine families with combined total sales of fewer than 10,000 light-duty vehicles, light-duty trucks, and heavy-duty engines utilizing assigned deterioration factors prescribed by the Administrator. The assigned deterioration factors shall be applied only to entire engine families.

(f) In lieu of testing an emission-data or durability-data vehicle (or engine) selected under paragraph (b) or (c) of this section, and submitting data therefore, a manufacturer may, with the prior written approval of the Administrator, submit exhaust emission data and/or fuel evaporative emission data, as applicable on a similar vehicle (or engine) for which certification has previously been obtained or for which all applicable data required under § 86.090–23 has previously been submitted.

(g)(1) This paragraph applies to light-duty vehicles and light-duty trucks, but does not apply to the production vehicles selected under paragraph (h) of this section.

(2)(i) Where it is expected that more than 33 percent of a carline, within an engine-system combination will be equipped with an item (whether that item is standard equipment or an option), the full estimated weight of that item shall be included in the curb weight computation for each vehicle available with that option in that carline, within that engine-system combination.

(ii) Where it is expected that 33 percent or less of the carline, within an engine-system, will be equipped with an item of (whether that item is standard equipment or an option), no weight for that item will be added in computing curb weight for any vehicle in

that carline, within that engine-system combination, unless that item is standard equipment on the vehicle.

(iii) In the case of mutually exclusive options, only the weight of the heavier option will be added in computing curb weight.

(iv) Optional equipment weighing less than 3 pounds per item need not be considered.

(3)(i) Where it is expected that more than 33 percent of a carline, within an engine-system combination will be equipped with an item of (whether that item is standard equipment or an option) that can reasonably be expected to influence emissions, then such items shall actually be installed (unless excluded under paragraph (g)(3)(ii) of this section) on all emission data and durability data vehicles of that carline, within that engine-system combination, on which the items are intended to be offered in production. Items that can reasonably be expected to influence emissions are: air conditioning, power steering, power brakes and other items determined by the Administrator.

(ii) If the manufacturer determines by test data or engineering evaluation that the actual installation of the optional equipment required by paragraph (g)(3)(i) of this section does not affect the emissions or fuel economy values, the optional equipment need not be installed on the test vehicle.

(iii) The weight of the options shall be included in the design curb weight and also be represented in the weight of the test vehicles.

(iv) The engineering evaluation, including any test data, used to support the deletion of optional equipment from test vehicles, shall be maintained by the manufacturer and shall be made available to the Administrator upon request.

(4) Where it is expected that 33 percent or less of a carline, within an engine system combination will be equipped with an item of (whether that item is standard equipment or an option) that can reasonably be expected to influence emissions, that item shall not be installed on any emission data or durability data vehicles of that carline, within that engine-system combination, unless that item is standard equipment on the vehicle.

(h) Alternative Durability Program durability-data vehicles. This section applies to light-duty vehicle and light-duty truck durability-data vehicles selected under the Alternative Durability Program described in § 86.085–13.

(1) In order to update the durability data to be used to determine a deterioration factor for each engine family group, the Administrator will select durability-data vehicles from the manufacturer's production line. Production vehicles will be selected from each model year's production for those vehicles certified using the Alternative Durability Program procedures.

(i) The Administrator shall select the production durability-data vehicle designs from the designs that the manufacturer offers for sale. For each model year and for each engine family group, the Administrator may select production durability-data vehicle designs of equal number to the number of engine families within the engine family group, up to a maximum of three vehicles.

(ii) The production durability-data vehicles representing the designs selected in paragraph (h)(1)(i) of this section will be randomly selected from the manufacturer's production. The Administrator will make these random selections unless the manufacturer (with prior approval of the Administrator) elects to make the random selections.

(iii) The manufacturer may select additional production durability-data vehicle designs from within the engine family group. The production durability-data vehicles representing these designs shall be randomly selected from the manufacturer s production in accordance with paragraph (h)(l)(ii) of this section.

(iv) For each production durability-data vehicle selected under paragraph (h)(1) of this section, the manufacturer shall provide to the Administrator (before the vehicle is tested or begins service accumulation) the vehicle identification number. Before the vehicle

begins service accumulation the manufacturer shall also provide the Administrator with a description of the durability-data vehicle as specified by the Administrator.

(v) In lieu of testing a production durability-data vehicle selected under paragraph (h)(1) of this section, and submitting data therefrom, a manufacturer may, with the prior written approval of the Administrator, submit exhaust emission data from a production vehicle of the same configuration for which all applicable data has previously been submitted.

(2) If, within an existing engine family group, a manufacturer requests to certify vehicles of a new design, engine family, emission control system, or with any other durability-related design difference, the Administrator will determine if the existing engine family group deterioration factor is appropriate for the new design. If the Administrator cannot make this determination or deems the deterioration factor not appropriate, the Administrator shall select preproduction durability-data vehicles under the provisions of paragraph (c) of this section. If vehicles are then certified using the new design, the Administrator may select production vehicles with the new design under the provisions of paragraph (h)(1) of this section.

(3) If a manufacturer reguests to certify vehicles of a new design that the Administrator determines are a new engine family group, the Administrator shall select preproduction durability data vehicles under the provisions of paragraph (c) of this section. If vehicles are then certified using the new design, the Administrator may select production vehicles of that design under the provisions of paragraph (h)(1) of this section.

[54 FR 14474, Apr. 11, 1989, as amended at 55 FR 30618, July 26, 1990]

§ 86.090–25 Maintenance.

(a) *Applicability*. This section applies to light-duty vehicles, light-duty trucks, and heavy-duty engines.

(1) Maintenance performed on vehicles, engines, subsystems, or components used to determine exhaust or evaporative emission deterioration factors is classified as either emission-related or non-emission-related and each of these can be classified as either scheduled or unscheduled. Further, some emission-related maintenance is also classified as critical emission-related maintenance.

(b) This section specifies emission-related scheduled maintenance for purposes of obtaining durability data and for inclusion in maintenance instructions furnished to purchasers of new motor vehicles and new motor vehicles engines under § 86.087–38.

(1) All emission-related scheduled maintenance for purposes of obtaining durability data must occur at the same mileage intervals (or equivalent intervals if engines, subsystems, or components are used) that will be specified in the manufacturer's maintenance instructions furnished to the ultimate purchaser of the motor vehicle or engine under § 86.088–35. This maintenance schedule may be updated as necessary throughout the testing of the vehicle/engine provided that no maintenance operation is deleted from the maintenance schedule after the operation has been performed on the test vehicle or engine.

(2) Any emission-related maintenance which is performed on vehicles, engines, subsystems, or components must be technologically necessary to assure in-use compliance with the emission standards. The manufacturer must submit data which demonstrate to the Administrator that all of the emission-related scheduled maintenance which is to be performed is technologically necessary. Scheduled maintenance must be approved by the Administrator prior to being performed or being included in the maintenance instructions provided to purchasers under § 86.087–38. As provided below, EPA has determined that emission-related maintenance at shorter intervals than that outlined in paragraphs (b)(3) and (b)(4) of this section is not technologically necessary to ensure in-use compliance. However, the Administrator may determine that maintenance even more restrictive (*e.g.*, longer intervals) than that listed in paragraphs (b)(3) and (b)(4) of this section is also not technologically necessary.

(3) For Otto-cycle light-duty vehicles, light-duty trucks and heavy duty engines, emission-related maintenance in addition to, or at shorter intervals than, the following will not be accepted as technologically necessary, except as provided in paragraph (b)(7) of this section.

(i)(A) The cleaning or replacement of light-duty vehicle or light-duty truck spark plugs at 30,000 miles of use and at 30,000 mile intervals thereafter.

(B) The cleaning or replacement of Otto-cycle heavy duty engine spark plugs at 25,000 miles (or 750 hours) of use and at 25,000 mile intervals (or 750-hour) intervals thereafter, for engines certified for use with unleaded fuel only.

(4) For diesel powered light-duty vehicles, light-duty trucks, and heavy-duty engines, emission-related maintenance in addition to, or at shorter intervals than, the following will not be accepted as technologically necessary, except as provided in paragraph (b)(7) of this section.

(i) For light-duty vehicles, the adjustment, cleaning, repair, or replacement of the following may not be performed within the 50,000-mile useful life of the vehicle:

(A) Exhaust gas recirculation system (including all related filters and control valves).

(B) Positive crankcase ventilation valve.

(C) Fuel injectors.

(D) Turbocharger.

(E) Electronic engine control unit and its associated sensors and actuators.

(F) Particulate trap or trap-oxidizer system (including related components).

(ii) For light-duty trucks and heavy-duty engines, the adjustment, cleaning, repair, or replacement of the following at 50,000 miles (or 1,500 hours) of use and at 50,000-mile (or 1,500-hour) intervals thereafter:

(A) Exhaust gas recirculation system (including all related filters and control valves).

(B) Positive crankcase ventilation valve.

(C) Fuel injector tips (cleaning *only*).

(iii) The following maintenance at 100,000 miles (or 3,000 hours) of use and at 100,000-mile (or 3,000-hour) intervals thereafter for light-duty trucks and light heavy-duty engines, or, at 150,000 miles (or 4,500 hours) of use and at 150,000-mile (or 4,500-hour) intervals thereafter for medium and heavy-duty engines: The adjustment, cleaning, repair, or replacement of:

(A) Fuel injectors.

(B) Turbocharger.

(C) Electronic engine control unit and its associated sensors and actuators.

(D) Particulate trap or trap-oxidizer system (including related components).

(5) [Reserved]

(6)(i) The following components are currently defined as critical emission-related components:

(A) Catalytic converter.

(B) Air injection system components.

(C) Electronic engine control unit and its associated sensors (including oxygen sensor if installed) and actuators.

(D) Exhaust gas recirculation system (including all related filters and control valves).

(E) Positive crankcase ventilation valve.

(F) Evaporative emission control system components (excluding canister air filter).

(G) Particulate trap or trap-oxidizer system.

(ii) All critical emission-related scheduled maintenance must have a reasonable likelihood of being performed in-use. The manufacturer shall be required to show the reasonable likelihood of such maintenance being performed in-use, and such showing shall be made prior to the performance of the maintenance on the durability data vehicle. Critical emission-related scheduled maintenance items which satisfy one of the following conditions will be accepted as having a reasonable likelihood of the maintenance item being performed in-use:

(A) Data are presented which establish for the Administrator a connection between emissions and vehicle performance such that as emissions increase due to lack of maintenance, vehicle performance will simultaneously deteriorate to a point unacceptable for typical driving.

(B) Survey data are submitted which adequately demonstrate to the Administrator that, at an 80 percent confidence level, 80 percent of such engines already have this critical maintenance item performed in-use at the recommended interval(s).

(C) A clearly displayed visible signal system approved by the Administrator is installed to alert the vehicle driver that maintenance is due. A signal bearing the message ''maintenance needed'' or ''check engine,'' or a similar message approved by the Administrator, shall be actuated at the appropriate mileage point or by component failure. This signal must be continuous while the engine is in operation, and not be easily eliminated without performance of the required maintenance. Resetting the signal shall be a required step in the maintenance operation. The method for resetting the signal system shall be approved by the Administrator.

(D) A manufacturer may desire to demonstrate through a survey that a critical maintenance item is likely to be performed without a visible signal on a maintenance item for which there is no prior in-use experience without the signal. To that end, the manufacturer may in a given model year market up to 200 randomly selected vehicles per critical emission-related maintenance item without such visible signals, and monitor the performance of the critical maintenance item by the owners to show compliance with paragraph (b)(6)(ii)(B) of this section. This option is restricted to two consecutive model years and may not be repeated until any previous survey has been completed. If the critical maintenance involves more than one engine family, the sample will be sales weighted to ensure that it is representative of all the families in question.

(E) The manufacturer provides the maintenance free of charge, and clearly informs the customer that the maintenance is free in the instructions provided under § 86.087–38.

(F) Any other method which the Administrator approves as establishing a reasonable likelihood that the critical maintenance will be performed in-use.

(iii) Visible signal systems used under paragraph (b)(6)(ii)(C) of this section are considered an element of design of the emission control system. Therefore, disabling, resetting, or otherwise rendering such signals inoperative without also performing the indicated maintenance procedure is a prohibited act under section 203(a)(3) of the Clean Air Act, as amended in August 1977 (42 U.S.C. 7522(a)(3)).

(7) *Changes to scheduled maintenance.* (i) For maintenance practices that existed prior to the 1980 model year, only the maintenance items listed in paragraphs (b)(3) and (b)(4) of this section are currently considered by EPA to be emission-related. The Administrator may, however, determine additional scheduled maintenance items that existed prior to the 1980 model year to be emission-related by announcement in a FEDERAL REGISTER Notice. In no event may this notification occur later than September 1 of the calendar year two years prior to the affected model year.

(ii) In the case of any new scheduled maintenance, the manufacturer must submit a request for approval to the Administrator for any maintenance that it wishes to recommend to purchasers and perform during durability determination. New scheduled maintenance is that maintenance which did not exist prior to the 1980 model year, including that which is a direct result of the implementation of new technology not found in production prior to the 1980 model year. The manufacturer must also include its recommendations as to the category (*i.e.,* emission-related or non-emission- related, critical or non-critical) of the subject maintenance and, for suggested emission-related maintenance, the maximum feasible maintenance interval. Such requests must include detailed evidence supporting the need for the maintenance requested, and supporting data or other substantiation for the recommended maintenance category and for the interval suggested for emission-related maintenance. Requests for new scheduled maintenance must be approved prior to the introduction of the new maintenance. The Administrator will then designate the maintenance as emission-related or non-emission-related. For maintenance items established as emission-related, the Administrator will further designate the

maintenance as critical if the component which receives the maintenance is a critical component under paragraph (b)(6) of this section. For each maintenance item designated as emission-related, the Administrator will also establish a technologically necessary maintenance interval, based on industry data and any other information available to EPA. Designations of emission-related maintenance items, along with their identification as critical or non-critical, and establishment of technologically necessary maintenance intervals, will be announced in the FEDERAL REGISTER.

(iii) Any manufacturer may request a hearing on the Administrator's determinations in paragraph (b)(7) of this section. The request shall be in writing, and shall include a statement specifying the manufacturer's objections to the Administrator's determinations, and data in support of such objections. If, after review of the request and supporting data, the Administrator finds that the request raises a substantial factual issue, he shall provide the manufacturer a hearing in accordance with § 86.078–6 with respect to such issue.

(c) Non-emission-related scheduled maintenance which is reasonable and technologically necessary (*e.g.*, oil change, oil filter change, fuel filter change, air filter change, cooling system maintenance, adjustment of idle speed, governor, engine bolt torque, valve lash, injector lash, timing, etc.) may be performed on durability-data vehicles at the intervals recommended by the manufacturer to the ultimate purchaser.

(d) *Unscheduled maintenance on light-duty durability data vehicles.* (1) Unscheduled maintenance may be performed during the testing used to determine deterioration factors, except as provided in paragraphs (d)(2) and (d)(3) of this section, only under the following provisions:

(i) A fuel injector or spark plug may be changed if a persistent misfire is detected.

(ii) Readjustment of an Otto-cycle vehicle cold-start enrichment system may be performed if there is a problem of stalling.

(iii) Readjustment of the engine idle speed (curb idle and fast idle) may be performed in addition to that performed as scheduled maintenance under paragraph (c) of this section, if the idle speed exceeds the manufacturer's recommended idle speed by 300 rpm or more, or if there is a problem of stalling.

(2) Any other unscheduled vehicle, emission control system, or fuel system adjustment, repair, removal, disassembly, cleaning, or replacement during testing to determine deterioration factors shall be performed only with the advance approval of the Administrator. Such approval will be given if the Administrator:

(i) Has made a preliminary determination that the part failure or system malfunction, or the repair of such failure or malfunction, does not render the vehicle or engine unrepresentative of vehicles or engines in-use, and does not require direct access to the combustion chamber, except for spark plug, fuel injection component, or removable prechamber removal or replacement; and,

(ii) Has made a determination that the need for maintenance or repairs is indicated by an overt indication of malfunction such as persistent misfiring, engine stalling, overheating, fluid leakage, loss of oil pressure, excessive fuel consumption or excessive power loss. The Administrator shall be given the opportunity to verify the existence of an overt indication of part failure and/or vehicle/engine malfunction (*e.g.*, misfiring, stalling, black smoke), or an activation of an audible and/or visible signal, prior to the performance of any maintenance to which such overt indication or signal is relevant under the provisions of this section.

(3) Emission measurement may not be used as a means of determining the need for unscheduled maintenance under paragraph (d)(2) of this section, except under the following conditions:

(i) The Administrator may approve unscheduled maintenance on durability-data vehicles based upon a significant change in emission levels that indicates a vehicle or engine malfunction. In these cases the Administrator may first approve specific diagnostic

procedures to identify the source of the problem. The Administrator may further approve of specific corrections to the problem after the problem has been identified. The Administrator may only approve the corrective action after it is determined that:

(A) The malfunction was caused by nonproduction build practices or by a previously undetected design problem,

(B) The malfunction will not occur in production vehicles or engines in-use, *and*

(C) The deterioration factor generated by the durability-data vehicle or engine will remain unaffected by the malfunction or by the corrective action (*e.g.*, the malfunction was present for only a short period of time before detection, replacement parts are functionally representative of the proper mileage or hours, etc.).

(ii) Following any unscheduled maintenance approved under paragraph (d)(3)(i) of this section, the manufacturer shall perform an after-maintenance emissions test. If the Administrator determines that the after-maintenance emission levels for any pollutant indicates that the deterioration factor is no longer representative of production, the Administrator may disqualify the durability-data vehicle or engine.

(4) If the Administrator determines that part failure or system malfunction occurrence and/or repair rendered the vehicle/engine unrepresentative of vehicles in-use, the vehicle/engine shall not be used for determining deterioration factors.

(5) Repairs to vehicle components of a durability data vehicle other than the engine, emission control system, or fuel system, shall be performed only as a result of part failure, vehicle system malfunction, or with the advance approval of the Administrator.

(e) *Maintenance on emission data vehicles and engines.* (1) Adjustment of engine idle speed on emission data vehicles may be performed once before the low-mileage/low-hour emission test point. Any other engine, emission control system, or fuel system adjustment, repair, removal, disassembly, cleaning, or replacement on emission data vehicles shall be performed only with the advance approval of the Administrator.

(2) Maintenance on light-duty truck emission-data vehicles selected under § 86.090–24(b)(1) (v) or (vii), and permitted to be tested for purposes of § 86.090–23(c)(1)(ii) under the provisions of § 86.090–24(b)(2), may be performed in conjunction with emission control system modifications at the low-mileage test point, and shall be performed in accordance with the maintenance instructions to be provided to the ultimate purchaser required under § 86.087–38.

(3) Maintenance on those light-duty truck emission-data vehicles selected under 86.090–24(b)(1)(v) which are not capable of being modified in the field for the purpose of complying with emissions standards at an altitude other than that intended by the original design, may be performed in conjunction with the emission control system modifications at the low-mileage test point, and shall be approved in advance by the Administrator.

(4) Repairs to vehicle components of an emission data vehicle other than the engine, emission control system, or fuel system, shall be performed only as a result of part failure, vehicle system malfunction, or with the advance approval of the Administrator.

(f) Equipment, instruments, or tools may not be used to identify malfunctioning, maladjusted, or defective engine components unless the same or equivalent equipment, instruments, or tools will be available to dealerships and other service outlets and:

(1) Are used in conjunction with scheduled maintenance on such components, or

(2) Are used subsequent to the identification of a vehicle or engine malfunction, as provided in paragraph (d)(2) of this section for durability data vehicles or in paragraph (e)(1) of this section for emission-data vehicles, or

(3) Unless specifically authorized by the Administrator.

(g)(1) Paragraph (g) of this section applies to light-duty vehicles.

(2) Complete emission tests (see §§ 86.106 through 86.145) are required, unless waived by the Administrator, before and after scheduled maintenance approved for durability data vehicles. The manufacturer may perform emission tests before unscheduled

maintenance. Complete emission tests are required after unscheduled maintenance which may reasonably be expected to affect emissions. The Administrator may waive the requirement to test after unscheduled maintenance. These test data may be submitted weekly to the Administrator, but shall be air posted or delivered within 7 days after completion of the tests, along with a complete record of all pertinent maintenance, including a preliminary engineering report of any malfunction diagnosis and the corrective action taken. A complete engineering report shall be delivered to the Administrator concurrently with the manufacturer's application for certification.

(h) All test data, maintenance reports, and required engineering reports shall be compiled and provided to the Administrator in accordance with § 86.090–23.

[53 FR 471, Jan. 7, 1988, as amended at 54 FR 14478, Apr. 11, 1989]

§ 86.090–26 Mileage and service accumulation; emission requirements.

(a)(1) Paragraph (a) of this section applies to light-duty vehicles.

(2) The procedure for mileage accumulation will be the Durability Driving Schedule as specified in appendix IV to this part. A modified procedure may also be used if approved in advance by the Administrator. Except with the advance approval of the Administrator, all vehicles will accumulate mileage at a measured curb weight which is within 100 pounds of the estimated curb weight. If the loaded vehicle weight is within 100 pounds of being included in the next higher inertia weight class as specified in § 86.129, the manufacturer may elect to conduct the respective emission tests at higher loaded vehicle weight.

(3) *Emission-data vehicles.* Unless otherwise provided for in § 86.090–23(a), emission-data vehicles shall be operated and tested as follows:

(i) *Otto-cycle.* (A) The manufacturer shall determine, for engine family, the mileage at which the engine-system combination is stabilized for emission-data testing. The manufacturer shall maintain, and provide to the Administrator if requested, a record of the rationale used in making this determination. The manufacturer may elect to accumulate 4,000 miles on each test vehicle within an engine family without making a determination. Any vehicle used to represent emission-data vehicle selections under § 86.090–24(b)(1) shall be equipped with an engine and emission control system that has accumulated at least the mileage determined under this paragraph. Fuel economy data generated from certification vehicles selected in accordance with § 86.090–24(b)(1) with engine-system combinations that have accumulated more than 10,000 kilometers (6,200 miles) shall be factored in accordance with § 600.006–82(c). Complete exhaust and evaporative (if required) emission tests shall be conducted for each emission-data vehicle selection under § 86.090–24(b)(1). The Administrator may determine under § 86.090–24(f) that no testing is required.

(B) Emission tests for emission-data vehicle(s) selected for testing under § 86.090–24(b)(1) (v) or (viii) shall be conducted at the mileage at which the engine system combination is stabilized for emission testing under high-altitude conditions.

(C) Exhaust and evaporative emissions tests for emission-data vehicle(s) selected for testing under § 86.090–24(b)(1) (i), (ii), (iii), (iv), or (vii)(B) shall be conducted at the mileage at which the engine-system combination is stabilized for emission testing under low-altitude conditions.

(D) For each engine family, the manufacturer will either select one vehicle previously selected under § 86.090–24(b)(1) (i) through (iv) to be tested under high-altitude conditions or provide a statement in accordance with § 86.090–24(b)(1)(v). Vehicles shall meet emission standards under both low- and high-altitude conditions without manual adjustments or modifications. In addition, any emission control device used to conform with the emission standards under high-altitude conditions shall initially actuate (automatically) no higher than 4,000 feet above sea level.

(ii) *Diesel.* (A) The manufacturer shall determine, for each engine family, the mileage at which the engine-system combination is stabilized for emission-data testing. The manufacturer shall

maintain, and provide to the Administrator if requested, a record of the rationale used in making this determination. The manufacturer may elect to accumulate 4,000 miles on each test vehicle within an engine family without making a determination. Any vehicle used to represent emission-data vehicle selections under § 86.090–24(b)(1) shall be equipped with an engine and emission control system that has accumulated at least the mileage determined under this paragraph. Fuel economy data generated from certification vehicles selected in accordance with § 86.090–24(b)(1) with engine-system combinations that have accumulated more than 10,000 kilometers (6,200 miles) shall be factored in accordance with § 600.006–82(c). Complete exhaust emission tests shall be conducted for each emission-data vehicle selection under § 86.090–24(b)(1). The Administrator may determine under § 86.090–24(f) that no testing is required.

(B) Emission tests for emission-data vehicle(s) selected for testing under § 86.090–24(b)(1)(v) shall be conducted at the mileage at which the engine-system combination is stabilized for emission testing under low-altitude conditions.

(C) Exhaust and evaporative emission tests for emission-data vehicle(s) selected for testing under § 86.090–24(b)(1)(i) through (iv) shall be conducted at the mileage at which the engine-system combination is stabilized for emission testing under low-altitude conditions.

(D) For each engine family, the manufacturer will either select one vehicle previously selected under § 86.090–24(b)(1) (i) through (iv) to be tested under high-altitude conditions or provide a statement in accordance with § 86.090–24(b)(1)(v). Vehicles shall meet emission standards under both low- and high-altitude conditions without manual adjustments or modifications. In addition, any emission control device used to conform with the emission standards under high-altitude conditions shall initially actuate (automatically) no higher than 4,000 feet above sea level.

(4)(i) *Durability data vehicles.* (A) Unless otherwise provided for in § 86.090–23(a), each durability-data vehicle shall be driven, with all emission control systems installed and operating, for 50,000 miles or such lesser distance as the Administrator may agree to as meeting the objective of this procedure.

(B) Complete exhaust emission tests shall be made at test point mileage intervals that the manufacturer determines.

(C) At a minimum, two complete exhaust emission tests shall be made. The first test shall be made at a distance not greater than 6,250 miles. The last shall be made at 50,000 miles.

(D) The mileage interval between test points must be of equal length except for the interval between zero miles and the first test, and any interval before or after testing conducted in conjunction with vehicle maintenance as specified in § 86.090–25(g)(2).

(ii) The manufacturer may, at its option, alter the durability-data vehicle at the selected test point to represent emission-data vehicle(s) within the same engine/system combination and perform emission tests on the altered vehicle. Upon completion of emission testing, the manufacturer may return the test vehicle to the durability-data vehicle configuration prior to the continuation of mileage accumulation.

(5)(i) All tests required by this subpart on emission-data vehicles shall be conducted at a mileage equal to or greater than the mileage the manufacturer determines under paragraph (a)(3) of this section.

(ii) All tests required by this subpart on durability-data vehicles shall be conducted within 250 miles of each of the test points.

(6)(i)(A) The manufacturer may conduct multiple tests at any test point at which the data are intended to be used in the deterioration factor. At each test point where multiple tests are conducted, the test results from all valid tests shall be averaged to determine the data point to be used in the deterioration factor calculation, except under paragraph (a)(6)(i)(B) of this section. The test results from emission tests performed before maintenance affecting emissions shall not be averaged with test results after the maintenance.

(B) The manufacturer is not required to average multiple tests if the manufacturer conducts no more than three tests at each test point and if the number of tests at each test point is equal. All test points must be treated the same for all exhaust pollutants.

(ii) The results of all emission testing shall be supplied to the Administrator. The manufacturer shall furnish to the Administrator explanation for voiding any test. The Administrator will determine if voiding the test was appropriate based upon the explanation given by the manufacturer for the voided test. Tests between test points may be conducted as required by the Administrator. Data from all tests (including voided tests) may be submitted weekly to the Administrator, but shall be air posted or delivered to the Administrator within 7 days after completion of the test. In addition, all test data shall be compiled and provided to the Administrator in accordance with § 86.090–23. Where the Administrator conducts a test on a durability-data vehicle at a prescribed test point, the results of that test will be used in the calculation of the deterioration factor.

(iii) The results of all emission tests shall be rounded, in accordance with ASTM E 29–67, to the number of decimal places contained in the applicable emission standard expressed to one additional significant figure.

(7) Whenever a manufacturer intends to operate and test a vehicle which may be used for emission or durability data, the manufacturer shall retain in its records all information concerning all emissions tests and maintenance, including vehicle alterations to represent other vehicle selections. For emission-data vehicles, this information shall be submitted, including the vehicle description and specification information required by the Administrator, to the Administrator following the emission-data test. For durability-data vehicles, this information shall be submitted following the 5,000-mile test.

(8) Once a manufacturer submits the information required in paragraphs (a)(7) of this section for a durability-data vehicle, the manufacturer shall continue to run the vehicle to 50,000 miles, and the data from the vehicle will be used in the calculations under § 86.090–28. Discontinuation of a durability-data vehicle shall be allowed only with the consent of the Administrator.

(9)(i) The Administrator may elect to operate and test any test vehicle during all or any part of the mileage accumulation and testing procedure. In such cases, the manufacturer shall provide the vehicle(s) to the Administrator with all information necessary to conduct this testing.

(ii) The test procedures in §§ 86.106 through 86.145 will be followed by the Administrator. The Administrator will test the vehicles at each test point. Maintenance may be performed by the manufacturer under such conditions as the Administrator may prescribe.

(iii) The data developed by the Administrator for the engine-system combination shall be combined with any applicable data supplied by the manufacturer on other vehicles of that combination to determine the applicable deterioration factors for the combination. In the case of a significant discrepancy between data developed by the Administrator and that submitted by the manufacturer, the Administrator's data shall be used in the determination of deterioration factors.

(10) Emission testing of any type with respect to any certification vehicle other than that specified in this part is not allowed except as such testing may be specifically authorized by the Administrator.

(11) This section does not apply to testing conducted to meet the requirements of § 86.090–23(b)(2).

(b)(1) Paragraph (b) of this section applies to light-duty trucks.

(2) There are three types of mileage or service accumulation applicable to light-duty trucks:

(i) Mileage or service accumulation on vehicles, engines, subsystems, or components selected by the manufacturer under § 86.090–24(c)(2)(i). The manufacturer determines the form and extent of this mileage or service accumulation, consistent with good engineering practice, and describes it in the application for certification.

(ii) Mileage accumulation of the duration selected by the manufacturer on emission-data vehicles selected under

§ 86.090–24(b)(1). The procedure for mileage accumulation will be the Durability Driving Schedule as specified in appendix IV to this part. A modified procedure may also be used if approved in advance by the Administrator. Except with the advance approval of the Administrator, all vehicles will accumulate mileage at a measured curb weight which is within 100 pounds of the estimated curb weight. If the loaded vehicle weight is within 100 pounds of being included in the next higher inertia weight class as specified in § 86.129, the manufacturer may elect to conduct the respective emission tests at the test weight corresponding to the higher loaded vehicle weight.

(iii) Service or mileage accumulation which may be part of the test procedures used by the manufacturer to establish evaporative emission deterioration factors.

(3) Exhaust emission deterioration factors will be determined on the basis of the mileage or service accumulation described in paragraph (b)(2)(i) of this section and related testing, according to the manufacturer's procedures.

(4) Each emission-data vehicle shall be operated and tested as follows:

(i) *Otto-cycle.* (A) The manufacturer shall determine, for each engine family, the mileage at which the engine-system combination is stabilized for emission-data testing. The manufacturer shall maintain, and provide to the Administrator if requested, a record of the rationale used in making this determination. The manufacturer may elect to accumulate 4,000 miles on each test vehicle within an engine family without making a determination. Any vehicle used to represent emission-data vehicle selections under § 86.090–24(b)(1) shall be equipped with an engine and emission control system that has accumulated at least the mileage determined under this paragraph. Fuel economy data generated from certification vehicles selected in accordance with § 86.090–24(b)(1) with engine-system combinations that have accumulated more than 10,000 kilometers (6,200 miles) shall be factored in accordance with § 600.006–82(c). Complete exhaust emission tests shall be conducted for each emission-data vehicle selection under § 86.090–24(b)(1). The Administrator may determine under § 86.090–24(f) that no testing is required.

(B) Emission tests for emission-data vehicle(s) selected for testing under § 86.090–24(b)(1) (v) or (viii) shall be conducted at the mileage at which the engine-system combination is stabilized for emission testing or at 6,436 kilometers (4,000-miles) under high-altitude conditions.

(C) Exhaust and evaporative emission tests for emission-data vehicle(s) selected for testing under § 86.090–24(b)(1) (ii), (iii), (iv)(A), or (vii)(B) shall be conducted at the mileage at which the engine-system combination is stabilized for emission testing or at the 6,436-kilometer (4,000-mile) test point under low-altitude conditions.

(D) If the manufacturer recommends adjustments or modifications in order to conform to emission standards at high altitude, such adjustments or modifications shall be made to the test vehicle selected under § 86.090–24(b)(1) (v) and (viii) (in accordance with the instructions to be provided to the ultimate purchaser) before being tested under high-altitude conditions.

(ii) *Diesel.* (A) The manufacturer shall determine, for each engine family, the mileage at which the engine-system combination is stabilized for emission-data testing. The manufacturer shall maintain, and provide to the Administrator if requested, a record of the rationale used in making this determination. The manufacturer may elect to accumulate 4,000 miles on each test vehicle within an engine family without making a determination. Any vehicle used to represent emission-data vehicle selections under § 86.090–24(b)(1) shall be equipped with an engine and emission control system that has accumulated at least the mileage determined under this paragraph. Fuel economy data generated from certification vehicles selected in accordance with § 86.090–24(b)(1) with engine-system combinations that have accumulated more than 10,000 kilometers (6,200 miles) shall be factored in accordance with § 600.006–82(c). Complete exhaust emission tests shall be conducted for each emission-data vehicle selection under § 86.090–24(b)(1). The Administrator may determine under § 86.090–24(f) that no testing is required.

(B) Emission tests for emission-data vehicle(s) selected for testing under § 86.090–24(b)(1) (v) or (viii) shall be conducted at the mileage at which the engine-system combination is stabilized for emission testing or at 6,436-kilometer (4,000-miles) under high-altitude conditions.

(C) Exhaust and evaporative emission tests for emission-data vehicle(s) selected for testing under § 86.090–24(b)(1) (ii), (iii), (iv)(A), or (vii)(B) shall be conducted at the mileage at which the engine-system combination is stabilized for emission testing or at the 6,436-kilometer (4,000-mile) test point under low-altitude conditions.

(D) If the manufacturer recommends adjustments or modifications in order to conform to emission standards at high altitude, such adjustments or modifications shall be made to the test vehicle selected under § 86.090–24(b)(1) (v) and (viii) (in accordance with the instructions to be provided to the ultimate purchaser) before being tested under high-altitude conditions.

(ii) *Diesel.* (A) The manufacturer shall determine, for each engine family, the mileage at which the engine-system combination is stabilized for emission-data testing. The manufacturer shall maintain, and provide to the Administrator if requested, a record of the rationale used in making this determination. The manufacturer may elect to accumulate 4,000 miles on each test vehicle within an engine family without making a determination. Any vehicle used to represent emission-data vehicle selections under § 86.090–24(b)(1) shall be equipped with an engine and emission control system that has accumulated at least the mileage determined under this paragraph. Fuel economy data generated from certification vehicles selection in accordance with § 86.090–24(b)(1) with engine-system combinations that have accumulated more than 10,000 kilometers (6,200 miles) shall be factored in accordance with § 600.006–82(c). Complete exhaust emission tests shall be conducted for each emission-data vehicle selection under § 86.090–24(b)(1). The Administrator may determine under § 86.090–24(f) that no testing is required.

(B) Emission tests for emission-data vehicle(s) selected for testing under § 86.090–24(b)(1)(v) shall be conducted at the mileage at which the engine-system combination is stabilized for emission testing or at the 6,436-kilometer (4,000-mile) test point under low-altitude conditions.

(C) Exhaust and evaporative emission tests for emission-data vehicle(s) selected for testing under § 86.090–24(b)(1) (ii), (iii), and (iv) shall be conducted at the mileage at which the engine-system combination is stabilized for emission testing or at the 6,436-kilometer (4,000-mile) test point under low-altitude conditions.

(D) If the manufacturer recommends adjustments or modifications in order to conform to emission standards at high altitude, such adjustments or modifications shall be made to the test vehicle selected under § 86.090–24(b)(1) (v) and (viii) (in accordance with the instructions to be provided to the ultimate purchaser) before being tested under high-altitude conditions.

(iii) [Reserved]

(iv) All tests required by this subpart on emission-data vehicles shall be conducted at a mileage equal to or greater than the mileage the manufacturer determines under paragraph (b)(4) of this section.

(c)(1) Paragraph (c) of this section applies to heavy-duty engines.

(2) There are two types of service accumulation applicable to heavy-duty engines:

(i) Service accumulation on engines, subsystems, or components selected by the manufacturer under § 86.088–24(c)(3)(i). The manufacturer determines the form and extent of this service accumulation, consistent with good engineering practice, and describes it in the application for certification.

(ii) Dynamometer service accumulation on emission-data engines selected under § 86.090–24(b) (2) or (3). The manufacturer determines the engine operating schedule to be used for dynamometer service accumulation, consistent with good engineering practice. A single engine operating schedule shall be used for all engines in an engine family-control system combination. Operating schedules may be different for different combinations.

(3) Exhaust emission deterioration factors will be determined on the basis

of the service accumulation described in paragraph (b)(2)(i) of this section and related testing, according to the manufacturer's procedures.

(4) The manufacturer shall determine, for each engine family, the number of hours at which the engine system combination is stabilized for emission-data testing. The manufacturer shall maintain, and provide to the Administrator if requested a record of the rationale used in making this determination. The manufacturer may elect to accumulate 125 hours on each test engine within an engine family without making a determination. Any engine used to represent emission-data engine selections under § 86.090–24(b)(2) shall be equipped with an engine system combination that has accumulated at least the number of hours determined under this paragraph. Complete exhaust emission tests shall be conducted for each emission-data engine selection under § 86.090–24(b)(2). Evaporative emission controls need not be connected provided normal operating conditions are maintained in the engine induction system. The Administrator may determine under § 86.090–24(f) that no testing is required.

(d)(1) Paragraph (d) of this section applies to both light-duty trucks and heavy-duty engines.

(2)(i) The results of all emission testing shall be supplied to the Administrator. The manufacturer shall furnish to the Administrator explanation for voiding any test. The Administrator will determine if voiding the test was appropriate based upon the explanation given by the manufacturer for the voided test. Tests between test points may be conducted as required by the Administrator. Data from all tests (including voided tests) may be submitted weekly to the Administrator, but shall be air posted or delivered to the Administrator within 7 days after completion of the tests. In addition, all test data shall be compiled and provided to the Administrator in accordance with § 86.090–23. Where the Administrator conducts a test on a durability-data vehicle at a prescribed test point, the results of that test will be used in the calculation of the deterioration factor.

(ii) The results of all emission tests shall be recorded and reported to the Administrator. These test results shall be rounded, in accordance with ASTM E 29–67, to the number of decimal places contained in the applicable emission standard expressed to one additional significant figure.

(3) Whenever a manufacturer intends to operate and test a vehicle (or engine) which may be used for emission data, the manufacturer shall retain in its records all information concerning all emissions tests and maintenance, including vehicle (or engine) alterations to represent other vehicle (or engine) selections. This information shall be submitted, including the vehicle (or engine) description and specification information required by the Administrator, to the Administrator following the emission-data test.

(4)–(5) [Reserved]

(6) Emission testing of any type with respect to any certification vehicle or engine other than that specified in this subpart is not allowed except as such testing may be specifically authorized by the Administrator.

[54 FR 14478, Apr. 11, 1989]

§ 86.090–27 Special test procedures.

(a) The Administrator may, on the basis of written application by a manufacturer, prescribe test procedures, other than those set forth in this part, for any light-duty vehicle, light-duty truck, heavy-duty engine, or heavy-duty vehicle which the Administrator determines is not susceptible to satisfactory testing by the procedures set forth in this part.

(b) If the manufacturer does not submit a written application for use of special test procedures but the Administrator determines that a light-duty vehicle, light-duty truck, heavy-duty engine, or heavy-duty vehicle is not susceptible to satisfactory testing by the procedures set forth in this part, the Administrator shall notify the manufacturer in writing and set forth the reasons for such rejection in accordance with the provisions of § 86.090–22(c).

[54 FR 14481, Apr. 11, 1989]

§ 86.091–2 Definitions.

The definitions of § 86.090–2 remain effective. The definitions listed in this

section apply beginning with the 1991 model year.

Urban bus means a heavy heavy-duty diesel-powered passenger-carrying vehicle with a load capacity of fifteen or more passengers and intended primarily for intra-city operation, *i.e.*, within the confines of a city or greater metropolitan area. Urban bus operation is characterized by short rides and frequent stops. To facilitate this type of operation, more than one set of quick-operating entrance and exit doors would normally be installed. Since fares are usually paid in cash or tokens rather than purchased in advance in the form of tickets, urban buses would normally have equipment installed for collection of fares. Urban buses are also typically characterized by the absence of equipment and facilities for long distance travel, *e.g.*, rest rooms, large luggage compartments, and facilities for stowing carry-on luggage. The useful life for urban buses is the same as the useful life for other heavy heavy-duty diesel engines.

[55 FR 30619, July 26, 1990]

§ 86.091–7 Maintenance of records; submittal of information; right of entry.

(a) The manufacturer of any new motor vehicle (or new motor vehicle engine) subject to any of the standards or procedures prescribed in this subpart shall establish, maintain and retain the following adequately organized and indexed records.

(1) *General records.* (i) The records required to be maintained by this paragraph shall consist of:

(A) Identification and description of all certification vehicles (or certification engines) for which testing is required under this subpart.

(B) A description of all emission control systems which are installed on or incorporated in each certification vehicle (or certification engine).

(C) A description of all procedures used to test each such certification vehicle (or certification engine).

(ii) A properly filed application for certification, following the format prescribed by the US EPA for the appropriate model year, fulfills each of the requirements of this paragraph (a)(1).

(2) *Individual records.* (i) A brief history of each motor vehicle (or motor vehicle engine) used for certification under this subpart including:

(A) In the case where a current production engine is modified for use in a certification vehicle (or as a certification engine), a description of the process by which the engine was selected and of the modifications made. In the case where the engine for a certification vehicle (or certification engine) is not derived from a current production engine, a general description of the buildup of the engine (*e.g.*, experimental heads were cast and machined according to supplied drawings, etc.). In both cases above, a description of the origin and selection process for carburetor, distributor, fuel system components, fuel injection components, emission control system components, smoke exhaust emission control system components, and exhaust aftertreatment devices as applicable, shall be included. The required descriptions shall specify the steps taken to assure that the certification vehicle (or certification engine) with respect to its engine, drivetrain, fuel system, emission control system components, exhaust aftertreatment devices, smoke exhaust emission control system components, vehicle weight or any other devices or components, as applicable, that can reasonably be expected to influence exhaust or evaporative emissions, as applicable, will be representative of production vehicles (or engines) and that either all components and/or vehicles (or engine) construction processed, component inspection and selection techniques, and assembly techniques employed in constructing such vehicles (or engines) are reasonably likely to be implemented for production vehicles (or engines) or that they are as closely analogous as practicable to planned construction and assembly processed.

(B) A complete record of all emission tests performed (except tests performed by EPA directly), including test results, the date and purpose of each test, and the number of miles accumulated on the vehicle (or the number of hours accumulated on the engine).

(C) The date of each mileage (or service) accumulation run, listing the mileage (or number of operating hours) accumulated.

(D) [Reserved]

(E) A record and description of all maintenance and other servicing performed, giving the date of the maintenance or service and the reason for it.

(F) A record and description of each test performed to diagnose engine or emission control system performance, giving the date and time of the test and the reason for it.

(G) [Reserved]

(H) A brief description of any significant events affecting the vehicle (or engine) during any time in the period covered by the history not described by an entry under one of the previous headings including such extraordinary events as vehicle accidents (or accidents involving the engine) or dynamometer runaway.

(ii) Each such history shall be started on the date that the first of any of the selection or buildup activities in paragraph (a)(2)(i)(A) of this section occurred with respect to the certification vehicle (or engine) changes or additional work is done on it, and shall be kept in a designated location.

(3) All records, other than routine emission test records, required to be maintained under this subpart shall be retained by the manufacturer for a period of six (6) years after issuance of all certificates of conformity to which they relate. Routine emission test records shall be retained by the manufacturer for a period of one (1) year after issuance of all certificates of conformity to which they relate. Records may be retained as hard copy or reduced to microfilm, ADP diskettes, etc., depending on the record retention procedures of the manufacturer; *Provided*, That in every case all the information contained in the hard copy shall be retained.

(b) The manufacturer of any new motor vehicle (or new motor vehicle engine) subject to any of the standards prescribed in this subpart shall submit to the Administrator at the time of issuance by the manufacturer copies of all instructions or explanations regarding the use, repair, adjustment, maintenance, or testing of such vehicle (or engine) relevant to the control of crankcase, exhaust or evaporative emissions, as applicable, issued by the manufacturer for use by other manufacturers, assembly plants, distributors, dealers, and ultimate purchasers, *Provided*, That any material not translated into the English language need not be submitted unless specifically requested by the Administrator.

(c)(1) The manufacturer (or contractor for the manufacturer, if applicable) of any new vehicle or engine that is certified under averaging, trading, or banking programs (as applicable) shall establish, maintain, and retain the following adequately organized and indexed records for each such vehicle or heavy-duty engine produced:

(i) EPA engine family.

(ii) Vehicle (or engine) identification number.

(iii) Vehicle (or engine) model year and build date.

(iv) BHP rating (heavy-duty engines only).

(v) Purchaser and destination.

(vi) Assembly plant.

(2) The manufacturer (or contractor for the manufacturer, if applicable) of any new vehicle or engine family that is certified under averaging, trading, or banking programs (as applicable) shall establish, maintain, and retain the following adequately organized and indexed records for each such family:

(i) EPA engine family.

(ii) FEL.

(iii) BHP conversion factor and the transient test BHP for each configuration tested (heavy-duty engines only).

(iv) Useful life.

(v) Projected U.S. production volume for the model year.

(vi) Actual U.S. production volume for the model year.

(3) The manufacturer (or contractor for the manufacturer, if applicable) shall retain all records required to be maintained under this section for a period of six years from the due date for the end-of-model year averaging, trading, and banking reports. Records may be retained as hard copy or reduced to microfilm, ADP files, etc., depending on the manufacturer's record retention procedure; *Provided*, That in every case all the information contained in the hard copy is retained.

(4) Nothing in this section limits the Administrator's discretion in requiring the manufacturer to retain additional records or submit information not specifically required by this section.

(5) Pursuant to a request made by the Administrator, the manufacturer shall submit to him the information that is required to be retained.

(6) EPA may void *ab initio* a certificate of conformity for a vehicle or engine family for which the manufacturer fails to retain the records required in this section or to provide such information to the Administrator upon request.

(7) Any engine family using NCPs must comply with the provisions established in the NCP program provided by 40 CFR part 86, subpart L.

(8) Any manufacturer, producing an engine family participating in trading using reserved credits, shall maintain the following records on a quarterly basis for each engine family in the trading subclass:

(i) The engine family,

(ii) The averaging set,

(iii) The actual quarterly and cumulative U.S. production volumes,

(iv) The value required to calculate credits as given in § 86.091–15,

(v) The resulting type [NO_X or particulate] and number of credits generated/required,

(vi) How and where credit surpluses are dispersed, and

(vii) How and through what means credit deficits are met.

(d)(1) Any manufacturer who has applied for certification of a new motor vehicle (or new motor vehicle engine) subject to certification test under this subpart shall admit or cause to be admitted any EPA Enforcement Officer or any EPA authorized representative during operating hours on presentation of credentials to any of the following:

(i) Any facility where any such tests or any procedures or activities connected with such test are or were performed.

(ii) Any facility where any new motor vehicle (or new motor vehicle engine) which is being, was, or is to be tested is present.

(iii) Any facility where any construction process or assembly process used in the modification or build up of such a vehicle (or engine) into a certification vehicle (or certification engine) is taking place or has taken place.

(iv) Any facility where any record or other document relating to any of the above is located.

(v) Any facility where any record or other document relating to the information specified in paragraph (c) of this section is located.

(2) Upon admission to any facility referred to in paragraph (d)(1) of this section, any EPA Enforcement Officer or any EPA authorized representative shall be allowed:

(i) To inspect and monitor any part or aspect of such procedures, activities, and testing facilities, including, but not limited to, monitoring vehicle (or engine) preconditioning, emissions tests and mileage (or service) accumulation, maintenance, and vehicle soak and storage procedures (or engine storage procedures), and to verify correlation or calibration of test equipment;

(ii) To inspect and make copies of any such records, designs, or other documents, including those records specified in paragraph (c) of this section; and

(iii) To inspect and/or photograph any part or aspect of any such certification vehicle (or certification engine) and any components to be used in the construction thereof.

(3) In order to allow the Administrator to determine whether or not production motor vehicles (or production motor vehicle engines) conform to the conditions upon which a certificate of conformity has been issued, or conform in all material respects to the design specifications which applied to those vehicles (or engines) described in the application for certification for which a certificate of conformity has been issued to standards prescribed under section 202 of the Act, any manufacturer shall admit any EPA Enforcement Officer or any EPA authorized representative on presentation of credentials to both:

(i) Any facility where any document, design, or procedure relating to the translation of the design and construction of engines and emission related

components described in the application for certification or used for certification testing into production vehicles (or production engines) is located or carried on;

(ii) Any facility where any motor vehicles (or motor vehicle engines) to be introduced into commerce are manufactured or assembled; and

(iii) Any facility where records specified in paragraph (c) of this section are located.

(4) On admission to any such facility referred to in paragraph (d)(4) of this section, any EPA Enforcement Officer or any EPA authorized representative shall be allowed:

(i) To inspect and monitor any aspects of such manufacture or assembly and other procedures;

(ii) To inspect and make copies of any such records, documents or designs;

(iii) To inspect and photograph any part or aspect of any such new motor vehicles (or new motor vehicle engines) and any component used in the assembly thereof that are reasonably related to the purpose of his entry; and

(iv) To inspect and make copies of any records and documents specified in paragraph (c) of this section.

(5) Any EPA Enforcement Officer or EPA authorized representative shall be furnished by those in charge of a facility being inspected with such reasonable assistance as he may request to help him discharge any function listed in this paragraph. Each applicant for or recipient of certification is required to cause those in charge of a facility operated for its benefit to furnish such reasonable assistance without charge to EPA whether or not the applicant controls the facility.

(6) The duty to admit or cause to be admitted any EPA Enforcement Officer or EPA authorized representative applies whether or not the applicant owns or controls the facility in question and applies both to domestic and to foreign manufacturers and facilities. EPA will not attempt to make any inspections which it has been informed that local law forbids. However, if local law makes it impossible to do what is necessary to insure the accuracy of data generated at a facility, no informed judgment that a vehicle or engine is certifiable or is covered by a certificate can properly be based on those data. It is the responsibility of the manufacturer to locate its testing and manufacturing facilities in jurisdictions where this situation will not arise.

(7) For purposes of this paragraph:

(i) *Presentation of credentials* shall mean display of the document designating a person as an EPA Enforcement Officer or EPA authorized representative.

(ii) Where vehicle, component, or engine storage areas or facilities are concerned, *operating hours* shall mean all times during which personnel other than custodial personnel are at work in the vicinity of the area or facility and have access to it.

(iii) Where facilities or areas other than those covered by paragraph (d)(7)(ii) of this section are concerned, *operating hours* shall mean all times during which an assembly line is in operation or all times during which testing, maintenance, mileage (or service) accumulation, production or compilation of records, or any other procedure or activity related to certification testing, to translation of designs from the test stage to the production stage, or to vehicle (or engine) manufacture or assembly is being carried out in a facility.

(iv) *Reasonable assistance* includes, but is not limited to, clerical, copying, interpretation and translation services, the making available on request of personnel of the facility being inspected during their working hours to inform the EPA Enforcement Officer or EPA authorized representative of how the facility operates and to answer his questions, and the performance on request of emissions tests on any vehicle (or engine) which is being, has been, or will be used for certification testing. Such tests shall be nondestructive, but may require appropriate mileage (or service) accumulation. A manufacturer may be compelled to cause the personal appearance of any employee at such a facility before an EPA Enforcement Officer or EPA authorized representative by written request for his appearance, signed by the Assistant Administrator for Air and Radiation, served on the manufacturer. Any such employee who has been instructed by

the manufacturer to appear will be entitled to be accompanied, represented, and advised by counsel.

(v) Any entry without 24 hour prior written or oral notification to the affected manufacturer shall be authorized in writing by the Assistant Administrator for Air and Radiation.

(8) EPA may void *ab initio* a certificate of conformity for vehicle or engine families introduced into commerce if the manufacturer (or contractor for the manufacturer, if applicable) fails to comply with any provision of this section.

(e) EPA Enforcement Officers or EPA authorized representatives are authorized to seek a warrant or court order authorizing the EPA Enforcement Officers or EPA authorized representatives to conduct activities related to entry and access as authorized in this section, as appropriate, to execute the functions specified in this section. EPA Enforcement Officers or EPA authorized representatives may proceed ex parte to obtain a warrant whether or not the Enforcement Officers first attempted to seek permission of the manufacturer or the party in charge of the facilities in question to conduct activities related to entry and access as authorized in this section.

(f) A manufacturer shall permit EPA Enforcement Officers or EPA authorized representatives who present a warrant or court order as described in paragraph (e) of this section to conduct activities related to entry and access as authorized in this section and as described in the warrant or court order. The manufacturer shall cause those in charge of its facility or facility operated for its benefit to permit EPA Enforcement Officers or EPA authorized representatives to conduct activities related to entry and access as authorized in this section pursuant to a warrant or court order whether or not the manufacturer controls the facility. In the absence of such a warrant or court order, EPA Enforcement Officers or EPA authorized representatives may conduct activities related to entry and access as authorized in this section only upon the consent of the manufacturer or the party in charge of the facilities in question.

(g) It is not a violation of this part or the Clean Air Act for any person to refuse to permit EPA Enforcement Officers or EPA authorized representatives to conduct activities related to entry and access as authorized in this section without a warrant or court order.

[55 FR 30619, July 26, 1990]

§ 86.091–9 Emission standards for 1991 and later model year light-duty trucks.

(a)(1) The standards set forth in paragraphs (a) through (c) of this section shall apply to light-duty trucks sold for principal use at other than a designated high-altitude location. Exhaust emissions from 1991 and later model year light-duty trucks shall not exceed:

(i)(A) *Hydrocarbons (for petroleum-fueled Otto-cycle and diesel light-duty trucks).* 0.80 gram per vehicle mile (0.50 gram per vehicle kilometer).

(B) *Total Hydrocarbon Equivalent (for methanol-fueled Otto-cycle and diesel light-duty trucks).* 0.80 gram per vehicle mile (0.50 gram per vehicle kilometer).

(ii) *Carbon monoxide.* (A) 10 grams per vehicle mile (6.2 grams per vehicle kilometer).

(B) 0.50 percent of exhaust gas flow at curb idle (for Otto-cycle and methanol-fueled diesel light-duty trucks only).

(iii) *Oxides of nitrogen.* (A) For light-duty trucks up to and including 3,750 lbs loaded vehicle weight, 1.2 grams per vehicle mile (0.75 gram per vehicle kilometer).

(B) For light-duty trucks greater loaded vehicle weight, 1.7 grams per vehicle mile (1.1 grams per vehicle kilometer).

(C) A manufacturer may elect to include any light-duty truck engine families in the NO_X averaging program, provided that it does not elect to pay an NCP for noncompliance with any emission standard applicable to that light-duty truck family. Trucks produced for sale in California or in designated high-altitude areas may be averaged only within each of those areas. Petroleum-fueled and methanol-fueled engine families may not be averaged together. Otto-cycle and diesel engine families may not be averaged together. If the manufacturer elects to

participate in the NO_X averaging program, individual family NO_X emission limits may not exceed 2.3 grams per mile. If the manufacturer elects to average together NO_X emissions of light-duty trucks subject to the standards of paragraphs (a)(1)(iii)(A) and (a)(1)(iii)(B) of this section, its composite NO_X standard applies to the combined fleets of light-duty trucks up to and including, and over, 3750 lbs loaded vehicle weight included in the average, and is calculated as defined in § 86.088–2.

(iv) *Particulate (for diesel light-duty trucks only).* (A) For light-duty trucks up to and including 3,750 lbs loaded vehicle weight, 0.26 gram per vehicle mile (0.16 gram per vehicle kilometer).

(B) For light-duty trucks 3,751 lbs and greater loaded vehicle weight, 0.13 gram per vehicle mile (0.08 gram per vehicle kilometer).

(C) A manufacturer may elect to include any diesel light-duty truck engine families in the appropriate particulate averaging program (petroleum and methanol), provided that it does not elect to pay an NCP for noncompliance with any emission standard applicable to that light-duty truck family. Trucks produced for sale in California or in designated high-altitude areas may be averaged only within each of those areas, and light-duty trucks subject to the standard of paragraph (a)(1)(iv)(B) of this section may be averaged only with other light-duty trucks subject to the standard of paragraph (a)(1)(iv)(B) of this section. Averaging is not permitted between fuel types. If the manufacturer elects to average both light-duty trucks subject to the standards of paragraphs (a)(1)(iv)(A) of this section and light-duty vehicles together in the appropriate particulate averaging program, its composite particulate standard applies to the combined set of light-duty vehicles and light-duty trucks that are included in the average and is calculated as defined in § 86.088–2.

(2) The standards set forth in paragraphs (a)(1)(i), (a)(1)(ii)(A), (a)(1)(iii), and (a)(1)(iv) of this section refer to the exhaust emitted over a driving schedule as set forth in subpart B of this part and measured and calculated in accordance with those procedures. The standard set forth in paragraph (a)(1)(ii)(B) of this section refers to the exhaust emitted at curb idle and measured and calculated in accordance with the procedures set forth in subpart P of this part.

(b) Fuel evaporative emissions from 1991 and later model year light-duty trucks shall not exceed (compliance with these standards is optional for 1991 model year methanol-fueled vehicles):

(1) *Hydrocarbons (for gasoline-fueled light-duty trucks).* 2.0 grams per test.

(2) *Total Hydrocarbon Equivalent (for methanol-fueled light-duty trucks).* 2.0 grams per test.

(3) The standards set forth in paragraphs (b) (1) and (2) of this section refer to a composite sample of the fuel evaporative emissions collected under the conditions set forth in subpart B of this part and measured in accordance with those procedures.

(c) No crankcase emissions shall be discharged into the ambient atmosphere from any 1991 and later model year light-duty truck.

(d)(1) Model year 1991 and later light-duty trucks sold for principal use at a designated high-altitude location shall be capable of meeting the following exhaust emission standards when tested under high-altitude conditions:

(i)(A) *Hydrocarbons (for petroleum-fueled Otto-cycle and diesel light-duty trucks).* 1.0 grams per vehicle mile (0.62 grams per vehicle kilometer).

(B) *Total Hydrocarbon Equivalent (for methanol-fueled Otto-cycle and diesel light-duty trucks).* 1.0 gram per vehicle mile (0.62 gram per vehicle kilometer).

(ii) *Carbon Monoxide.* (A) 14 grams per vehicle mile (8.7 grams per vehicle kilometer).

(B) 0.50 percent of exhaust gas flow at curb idle (for Otto-cycle and methanol-fueled diesel light duty trucks only).

(iii) *Oxides of Nitrogen.* (A) For light-duty trucks up to and including 3,750 lbs loaded vehicle weight, 1.2 grams per vehicle mile (0.75 grams per vehicle kilometer).

(B) For light-duty trucks 3,751 lbs and greater loaded vehicle weight, 1.7 grams per vehicle mile (1.1 grams per vehicle kilometer).

(iv) *Particulate (for diesel light-duty trucks only).* (A) For light-duty trucks

up to and including 3,750 lbs loaded vehicle weight, 0.26 gram per vehicle mile (0.16 gram per vehicle kilometer).

(B) For light-duty trucks 3,751 lbs and greater loaded vehicle weight, 0.13 gram per vehicle mile (0.08 gram per vehicle kilometer).

(2) The standards set forth in paragraphs (d)(1)(i), (d)(1)(ii)(A), (d)(1)(iii), and (d)(1)(iv) of this section refer to the exhaust emitted over a driving schedule as set forth in subpart B of this part and measured and calculated in accordance with those procedures. The standard set forth in paragraph (d)(1)(ii)(B) of this section refers to the exhaust emitted at curb idle and measured and calculated in accordance with the procedures set forth in subpart P of this part.

(e) Fuel evaporative emissions from 1991 and later model year light-duty trucks sold for principal use at a designated high-altitude location, when tested under high-altitude conditions, shall not exceed:

(1) *Hydrocarbons (for gasoline-fueled light-duty trucks).* 2.6 grams per test.

(2) *Total Hydrocarbon Equivalent (for methanol-fueled light-duty trucks).* 2.6 grams per test.

(3) The standards set forth in paragraphs (e) (1) and (2) of this section refer to a composite sample of the fuel evaporative emissions collected under the conditions set forth in subpart B of this part and measured in accordance with those procedures.

(f) No crankcase emissions shall be discharged into the ambient atmosphere from any 1991 and later model year light-duty trucks sold for principal use at a designated high-altitude location.

(g)(1) Any light-duty truck that a manufacturer wishes to certify for sale at low altitude must be capable of meeting high-altitude emission standards (specified in paragraphs (d) through (f) of this section). The manufacturer may specify vehicle adjustments or modifications to allow the vehicle to meet high-altitude standards but these adjustments or modifications may not alter the vehicle's basic engine, inertia weight class, transmission configuration, and axle ratio.

(i) A manufacturer may certify unique configurations to meet the high-altitude standards but is not required to certify these vehicle configurations to meet the low-altitude standards.

(ii) Any adjustments or modifications that are recommended to be performed on vehicles to satisfy the requirements of paragraph (g)(1) of this section:

(A) Shall be capable of being effectively performed by commercial repair facilities, and

(B) Must be included in the manufacturer's application for certification.

(2) The manufacturer may exempt 1991 and later model year vehicles from compliance with the high-altitude emission standards set forth in paragraphs (d) and (e) of this section if the vehicles are not intended for sale at high altitude and if the following requirements are met. A vehicle configuration shall only be considered eligible for exemption if the requirements of either paragraph (g)(2) (i), (ii), (iii), or (iv) of this section are met.

(i) Its design parameters (displacement-to-weight ratio (D/W) and engine speed-to-vehicle-speed ratio (N/V)) fall within the exempted range for that manufacturer for that year. The exempted range is determined according to the following procedure:

(A) The manufacturer shall graphically display the D/W and N/V data of all vehicle configurations it will offer for the model year in question. The axis of the abscissa shall be D/W (where (D) is the engine displacement expressed in cubic centimeters and (W) is the gross vehicle weight (GVW) expressed in pounds), and the axis of the ordinate shall be N/V (where (N) is the crankshaft speed expressed in revolutions per minute and (V) is the vehicle speed expressed in miles per hour). At the manufacturer's option, either the 1:1 transmission gear ratio or the lowest numerical gear ratio available in the transmission will be used to determine N/V. The gear selection must be the same for all N/V data points on the manufacturer's graph. For each transmission/axle ratio combination, only the lowest N/V value shall be used in the graphical display.

(B) The product line is then defined by the equation, $N/V = C(D/W)^{-0.9}$ where the constant, C, is determined by the requirement that all the vehicle

data points either fall on the line or lie to the upper right of the line as displayed on the graphs.

(C) The exemption line is then defined by the equation, $N/V = C(0.84\ D/W)^{-0.9}$ where the constant, C, is the same as that found in paragraph (g)(2)(i)(B) of this section.

(D) The exempted range includes all values of N/V and D/W which simultaneously fall to the lower left of the exemption line as drawn on the graph.

(ii) Its design parameters fall within the alternate exempted range for that manufacturer that year. The alternate exempted range is determined by substituting rated horsepower (hp) for displacement (D) in the exemption procedure described in paragraph (g)(2)(i) of this section and by using the product line $N/V = C(hp/W)^{-0.9}$.

(A) Rated horsepower shall be determined by using the Society of Automotive Engineers Test Procedure J 1349, or any subsequent version of that test procedure. Any of the horsepower determinants within that test procedure may be used, as long as it is used consistently throughout the manufacturer's product line in any model year.

(B) No exemptions will be allowed under paragraph (g)(2)(ii) of this section to any manufacturer that has exempted vehicle configurations as set forth in paragraph (g)(2)(i) of this section.

(iii) Its acceleration time (the time it takes a vehicle to accelerate from 0 to a speed not less than 40 miles per hour and not greater than 50 miles per hour) under high-altitude conditions is greater than the largest acceleration time under low-altitude conditions for that manufacturer for that year. The procedure to be followed in making this determination is:

(A) The manufacturer shall list the vehicle configuration and acceleration time under low-altitude conditions of that vehicle configuration which has the highest acceleration time under low-altitude conditions of all the vehicle configurations it will offer for the model year in question. The manufacturer shall also submit a description of the methodology used to make this determination.

(B) The manufacturer shall then list the vehicle configurations and acceleration times under high-altitude conditions of all those vehicles configurations which have higher acceleration times under high-altitude conditions than the highest acceleration time at low altitude identified in paragraph (g)(2)(iii)(A) of this section.

(iv) In lieu of performing the test procedure of paragraph (g)(2)(iii) of this section, its acceleration time can be estimated based on the manufacturer's engineering evaluation, in accordance with good engineering practice, to meet the exemption criteria of paragraph (g)(2)(iii) of this section.

(3) The sale of a vehicle for principal use at a designated high-altitude location that has been exempted as set forth in paragraph (g)(2) of this section will be considered a violation of section 203(a)(1) of the Clean Air Act.

[53 FR 43876, Oct. 31, 1988, as amended at 54 FR 14612, Apr. 11, 1989; 55 FR 46627, Nov. 5, 1990]

§ 86.091–10 Emission standards for 1991 and later model year Otto-cycle heavy-duty engines and vehicles.

(a)(1) Exhaust emissions from new 1991 and later model year Otto-cycle heavy-duty engines shall not exceed (compliance with these standards is optional through the 1996 model year natural gas- and liquefied petroleum gas-fueled heavy-duty engines):

(i) For Otto-cycle heavy-duty engines fueled with either gasoline or liquefied petroleum gas, and intended for use in all vehicles except as provided in paragraph (a)(3) of this paragraph.

(A) *Hydrocarbons*. 1.1 grams per brake horsepower-hour (0.41 gram per megajoule), as measured under transient operating conditions.

(B) *Carbon monoxide*. (*1*) 14.4 grams per brake horsepower-hour (5.36 grams per megajoule), as measured under transient operating conditions.

(*2*) *For Otto-cycle heavy-duty engines fueled with either gasoline or liquefied petroleum gas and utilizing aftertreatment technology*. 0.50 percent of exhaust gas flow at curb idle.

(C) *Oxides of nitrogen*. (*1*) 5.0 grams per brake horsepower-hour (1.9 grams per megajoule), as measured under transient operating conditions.

(*2*) A manufacturer may elect to include any or all of its gasoline-fueled Otto-cycle heavy duty engine families in any or all of the NO_X averaging, trading, or banking programs for heavy-duty engines, within the restrictions described in §86.091–15. If the manufacturer elects to include engine families in any of these programs, the NO_X FELs may not exceed 6.0 grams per brake horsepower-hour (2.2 grams per megajoule). This ceiling value applies whether credits for the family are derived from averaging, trading, or banking programs.

(*3*) A manufacturer may elect to include any or all of its liquefied petroleum gas-fueled Otto-cycle heavy-duty engine families in any or all of the NO_X averaging, trading, or banking programs for heavy-duty engines, within the restrictions described in §86.091–15. If the manufacturer elects to include engine families in any of these programs, the NO_X FELs may not exceed 6.0 grams per brake horsepower-hour (2.2 grams per megajoule). This ceiling value applies whether credits for the family are derived from averaging, trading or banking programs.

(ii) For Otto-cycle heavy-duty engines fueled with either gasoline or liquefied petroleum gas, and intended for use only in vehicles with a Gross Vehicle Weight Rating of greater than 14,000 lbs.

(A) *Hydrocarbons*. 1.9 grams per brake horsepower-hour (0.71 gram per megajoule), as measured under transient operating conditions.

(B) *Carbon Monoxide*. (*1*) 37.1 grams per brake horsepower-hour (13.8 grams per megajoule), as measured under transient operating conditions.

(*2*) *For Otto-cycle heavy-duty engines fueled with either gasoline or liquefied petroleum gas and utilizing aftertreatment technology*. 0.50 percent of exhaust gas flow at curb idle.

(C) *Oxides of nitrogen*. (*1*) 5.0 grams per brake horsepower-hour (1.9 grams per megajoule), as measured under transient operating conditions.

(*2*) A manufacturer may elect to include any or all of its gasoline-fueled Otto-cycle heavy-duty engine families in any or all of the NO_X averaging, trading, or banking programs for heavy-duty engines, within the restrictions described in §86.091–15. If the manufacturer elects to include engine families in any of these programs, the NO_X FELs may not exceed 6.0 grams per brake horsepower-hour (2.2 grams per megajoule). This ceiling value applies whether credits for the family are derived from averaging, trading or banking programs.

(*3*) A manufacturer may elect to include any or all of its liquefied petroleum gas-fueled Otto-cycle heavy-duty engine families in any or all of the NO_X averaging, trading or banking programs for heavy-duty engines, within the restrictions described in §86.091–15. If the manufacturer elects to include engine families in any of these programs, the NO_X FELs may not exceed 6.0 grams per brake horsepower-hour (2.2 grams per megajoule). This ceiling value applies whether credits for the family are derived from averaging, trading or banking programs.

(iii) For *methanol-fueled Otto-cycle heavy-duty engines* intended for use in all vehicles, except as provided in paragraph (a)(3) of this section.

(A) *Total Hydrocarbon Equivalent*. 1.1 gram per brake horsepower-hour (0.41 gram per megajoule), as measured under transient operating conditions.

(B) *Carbon monoxide*. (*1*) 14.4 grams per brake horsepower-hour (5.36 grams per megajoule), as measured under transient operating conditions.

(*2*) 0.50 percent of exhaust gas flow at curb idle.

(C) *Oxides of nitrogen*. (*1*) 5.0 grams per brake horsepower-hour (1.9 grams per megajoule), as measured under transient operating conditions.

(*2*) A manufacturer may elect to include any or all of its methanol-fueled Otto-cycle heavy-duty engine families in any or all of the NO_X averaging, trading, or banking programs for heavy-duty engines, within the restrictions described in §86.091–15. If the manufacturer elects to include engine families in any of these programs, the NO_X FELs may not exceed 6.0 grams per brake horsepower-hour (2.2 grams per megajoule). This ceiling value applies whether credits for the family are derived from averaging, trading or banking programs.

(iv) For *methanol-fueled Otto-cycle heavy-duty engines* intended for use

only in vehicles with a Gross Vehicle Weight Rating of greater than 14,000 lbs.

(A) *Total Hydrocarbon Equivalent.* 1.9 grams per brake horsepower-hour (0.71 gram per megajoule), as measured under transient operating conditions.

(B) *Carbon monoxide.* (*1*) 37.1 grams per brake horsepower-hour (13.8 grams per megajoule), as measured under transient operating conditions.

(*2*) 0.50 percent of exhaust gas flow at curb idle.

(C) *Oxides of nitrogen.* (*1*) 5.0 grams per brake horsepower-hour (1.9 grams per megajoule), as measured under transient operating conditions.

(*2*) A manufacturer may elect to include any or all of its methanol-fueled Otto-cycle heavy-duty engine families in any or all of the NO_X averaging, trading, or banking programs for heavy-duty engines, within the restrictions described in § 86.091–15. If the manufacturer elects to include engine families in any of these programs, the NO_X FELs may not exceed 6.0 grams per brake horsepower-hour (2.2 grams per megajoule). This ceiling value applies whether credits for the family are derived from averaging, trading or banking programs.

(v) For natural gas-fueled Otto-cycle heavy-duty engines intended for use in all vehicles except as provided in paragraph (a)(3) of this section.

(A) *Nonmethane hydrocarbons.* 0.9 gram per brake horsepower-hour (0.33 gram per megajoule), as measured under transient operating conditions.

(B) *Carbon monoxide.* (*1*) 14.4 grams per brake horsepower-hour (5.36 grams per megajoule), as measured under transient operating conditions.

(*2*) *For natural gas-fueled Otto-cycle heavy-duty engines utilizing aftertreatment technology.* 0.50 percent of exhaust flow at curb idle.

(C) *Oxides of nitrogen.* (*1*) 5.0 grams per brake horsepower-hour (1.9 grams per megajoule), as measured under transient operating conditions.

(*2*) A manufacturer may elect to include any or all of its natural gas-fueled Otto-cycle heavy-duty engine families in any or all of the NO_X averaging, trading or banking programs for heavy-duty engines, within the restrictions described in § 86.091–15. If the manufacturer elects to include engine families in any of these programs, the NO_X FELs may not exceed 6.0 grams per brake horsepower-hour (2.2 grams per megajoule). This ceiling value applies whether credits for the family are derived from averaging, trading or banking programs.

(vi) For natural gas-fueled Otto-cycle engines intended for use only in vehicles with a Gross Vehicle Weight Rating of greater than 14,000 lbs.

(A) *Nonmethane hydrocarbons.* 1.7 grams per brake horsepower-hour (0.63 gram per megajoule), as measured under transient operating conditions.

(B) *Carbon monoxide.* (*1*) 37.1 grams per brake horsepower-hour (13.8 grams per megajoule), as measured under transient operating conditions.

(*2*) *For natural gas-fueled Otto-cycle heavy-duty engines utilizing aftertreatment technology.* 0.50 percent of exhaust gas flow at curb idle.

(C) *Oxides of nitrogen.* (*1*) 5.0 grams per brake horsepower-hour (1.9 grams per megajoule), as measured under transient operating conditions.

(*2*) A manufacturer may elect to include any or all of its natural gas-fueled Otto-cycle heavy-duty engine families in any or all of the NO_X averaging, trading or banking programs for heavy-duty engines, within the restrictions described in § 86.091–15. If the manufacturer elects to include engine families in any of these programs, the NO_X FELs may not exceed 6.0 grams per brake horsepower-hour (2.2 grams per megajoule). This ceiling value applies whether credits for the family are derived from averaging, trading or banking programs.

(2) The standards set forth in paragraph (a)(1) of this section refer to the exhaust emitted over the operating schedule set forth in paragraph (f)(1) of appendix I to this part, and measured and calculated in accordance with the procedures set forth in subpart N or P.

(3)(i) A manufacturer may certify one or more Otto-cycle heavy-duty engine configurations intended for use in all vehicles to the emission standards set forth in paragraphs (a)(1)(ii), (a)(1)(iv) or (a)(1)(vi) of this section: *Provided*, that the total model year sales of such configuration(s), segregated by fuel type, being certified to the emission

standards in paragraph (a)(1)(ii) of this section represent no more than five percent of total model year sales of each fuel type Otto-cycle heavy-duty engine intended for use in vehicles with a Gross Vehicle Weight Rating of up to 14,000 pounds by the manufacturer.

(ii) The configurations certified to the emission standards of paragraphs (a)(1) (ii), (iv) and (vi) of this section under the provisions of paragraph (a)(3)(i) of this section shall still be required to meet the evaporative emission standards set forth in paragraphs (b)(1)(i), (b)(2)(i) and (b)(3)(i) of this section.

(b) *Evaporative emissions* from 1991 and later model year heavy-duty vehicles shall not exceed:

(1) *Hydrocarbons (for vehicles equipped with gasoline-fueled engines).* (i) For vehicles with a Gross Vehicle Weight Rating of up to 14,000 lbs, 3.0 grams per test.

(ii) For vehicles with a Gross Vehicle Weight Rating of greater than 14,000 lbs, 4.0 grams per test.

(2) *Total Hydrocarbon Equivalent (for vehicles equipped with methanol-fueled engines).* (i) For vehicles with a Gross Vehicle Weight Rating of up to 14,000 lbs, 3.0 grams per test.

(ii) For vehicles with a Gross Vehicle Weight Rating of greater than 14,000 lbs, 4.0 grams per test.

(3)(i) For vehicles with a Gross Vehicle Weight Rating of up to 26,000 lbs, the standards set forth in paragraphs (b)(1) and (b)(2) of this section refer to a composite sample of evaporative emissions collected under the conditions set forth in subpart M and measured in accordance with those procedures.

(ii) For vehicles with a Gross Vehicle Weight Rating of greater than 26,000 lbs., the standards set forth in paragraphs (b)(1)(ii) and (b)(2)(ii) of this section refer to the manufacturer's engineering design evaluation using good engineering practice (a statement of which is required in § 86.091–23(b)(4)(ii)).

(c) No crankcase emissions shall be discharged into the ambient atmosphere from any new 1991 or later model year Otto-cycle heavy-duty engine.

(d) Every manufacturer of new motor vehicle engines subject to the standards prescribed in this section shall, prior to taking any of the actions specified in section 203(a)(1) of the Act, test or cause to be tested motor vehicle engines in accordance with applicable procedures in subpart N or P of this part to ascertain that such test engines meet the requirements of paragraphs (a) and (c) of this section.

(Secs. 202, 203, 206, 207, 208, 301a, Clean Air Act, as amended; 42 U.S.C. 7521, 7522, 7525, 7541, 7542, 7601a)

[50 FR 10652, Mar. 15, 1985, as amended at 54 FR 14464, Apr. 11, 1989; 55 FR 30622, July 26, 1990; 59 FR 48492, Sept. 21, 1994]

§ 86.091–11 Emission standards for 1991 and later model year diesel heavy-duty engines.

(a)(1) Exhaust emissions from new 1991 and later model year diesel heavy-duty engines shall not exceed the following:

(i)(A) *Hydrocarbons (for petroleum-fueled diesel engines).* 1.3 grams per brake horsepower-hour (0.48 gram per megajoule), as measured under transient operating conditions.

(B) *Total Hydrocarbon Equivalent (for methanol-fueled diesel engines).* 1.3 grams per brake horsepower-hour (0.48 gram per megajoule), as measured under transient operating conditions.

(ii) *Carbon monoxide.* (A) 15.5 grams per brake horsepower-hour (5.77 grams per megajoule), as measured under transient operating conditions.

(B) 0.50 percent of exhaust gas flow at curb idle (methanol-fueled diesel only).

(iii) *Oxides of nitrogen.* (A) 5.0 grams per brake horsepower-hour (1.9 grams per megajoule), as measured under transient operating conditions.

(B) A manufacturer may elect to include any or all of its diesel heavy-duty engine families in any or all of the NO_X averaging, trading, or banking programs for heavy-duty engines, within the restrictions described in § 86.091–15. If the manufacturer elects to include engine families in any of these programs, the NO_X FELs may not exceed 6.0 grams per brake horsepower-hour (2.2 grams per megajoule). This ceiling value applies whether credits for the family are derived from averaging, trading or banking programs.

(iv) *Particulate* (A) For all diesel engines, including those to be used in

urban buses, 0.25 gram per brake horsepower-hour (0.093 gram per megajoule) as measured under transient operating conditions.

(B) [Reserved]

(C) A manufacturer may elect to include any or all of its diesel heavy-duty engine families in any or all of the particulate averaging, trading, or banking programs for heavy-duty engines, within the restrictions described in § 86.091–15. If the manufacturer elects to include engine families in any of these programs, the particulate FELs may not exceed 0.60 gram per brake horsepower-hour (0.22 gram per megajoule). This ceiling value applies whether credits for the family are derived from averaging, trading or banking programs.

(2) The standards set forth in paragraph (a)(1) of this section refer to the exhaust emitted over operating schedules as set forth in paragraph (f)(2) of appendix I of this part, and measured and calculated in accordance with the procedures set forth in subpart N of this part, except as noted in § 86.091–23(c)(2) (i) and (iii).

(b)(1) The opacity of smoke emission from new 1991 and later model year diesel heavy-duty engines shall not exceed:

(i) 20 percent during the engine acceleration mode.

(ii) 15 percent during the engine lugging mode.

(iii) 50 percent during the peaks in either mode.

(2) The standards set forth in paragraph (b)(1) of this section refer to exhaust smoke emissions generated under the conditions set forth in subpart I of this part and measured and calculated in accordance with those procedures.

(3) *Evaporative emissions* (total of non-oxygenated hydrocarbons plus methanol) from 1991 and later model year heavy-duty vehicles equipped with methanol-fueled diesel engines shall not exceed:

(i) For vehicles with a Gross Vehicle Weight Rating of up to 14,000 lbs, 3.0 grams per test.

(ii) For vehicles with a Gross Vehicle Weight Rating of greater than 14,000 lbs, 4.0 grams per test.

(4)(i) For vehicles with a Gross Vehicle Weight Rating of up to 26,000 lbs, the standards set forth in paragraph (b)(3) of this section refer to a composite sample of evaporative emissions collected under the conditions set forth in subpart M and measured in accordance with those procedures.

(ii) For vehicles with a Gross Vehicle Weight Rating of greater than 26,000 lbs, the standard set forth in paragraph (b)(3)(ii) of this section refers to the manufacturers' engineering design evaluation using good engineering practice (a statement of which is required in § 86.091–23(b)(4)(ii)).

(c) No crankcase emissions shall be discharged into the ambient atmosphere from any new 1991 or later model year methanol-fueled diesel, or any naturally-aspirated diesel heavy-duty engine. For petroleum fueled engines only, this provision does not apply to engines using turbochargers, pumps, blowers, or superchargers for air induction.

(d) Every manufacturer of new motor vehicle engines subject to the standards prescribed in this section shall, prior to taking any of the actions specified in section 203(a)(1) of the Act, test or cause to be tested motor vehicle engines in accordance with applicable procedures in subpart I or N of this part to ascertain that such test engines meet the requirements of paragraphs (a), (b), and (c) and (d) of this section.

(Secs. 202, 203, 206, 207, 208, 301a, Clean Air Act, as amended; 42 U.S.C. 7521, 7522, 7525, 7541, 7542, 7601a)

[50 FR 10653, Mar. 15, 1985, as amended at 54 FR 14465, Apr. 11, 1989; 55 FR 30622, July 26, 1990; 56 FR 64711, Dec. 12, 1991]

§ 86.091–15 NO_X and particulate averaging, trading, and banking for heavy-duty engines.

(a)(1) Heavy-duty engines eligible for the NO_X and particulate averaging, trading, and banking programs are described in the applicable emission standards sections in this subpart. Participation in these programs is voluntary.

(2)(i) Engine families with FELs exceeding the applicable standard shall obtain emission credits in a mass amount sufficient to address the shortfall. Credits may be obtained from

averaging, trading, or banking, within the averaging set restrictions described in this section.

(ii) Engine families with FELs below the applicable standard will have emission credits available to average, trade, bank or a combination thereof. Credits may not be used to offset emissions that exceed an FEL. Credits may not be used to remedy an in-use nonconformity determined by a Selective Enforcement Audit or by recall testing. However, credits may be used to allow subsequent production of engines for the family in question if the manufacturer elects to recertify to a higher FEL.

(iii) Engine families within a given averaging set may not both generate and use like emission credits in the same model year. This restriction is to be applied on a pollutant-specific basis.

(b) Participation in the NO_X and/or particulate averaging, trading, and banking programs shall be done as follows.

(1) During certification, the manufacturer shall:

(i) Declare its intent to include specific engine families in the averaging, trading and/or banking programs. Separate declarations are required for each program and for each pollutant (*i.e.*, NO_X and particulate).

(ii) Declare an FEL for each engine family participating in one or more of these three programs.

(A) The FEL must be to the same level of significant digits as the emission standard (one-tenth of a gram per brake horsepower for NO_X emissions and one-hundredth of a gram per brake horsepower-hour for particulate emissions).

(B) In no case may the FEL exceed the upper limit prescribed in the section concerning the applicable heavy-duty engine NO_X and particulate emission standards.

(iii) Calculate the projected emission credits (+ / −) based on quarterly production projections for each participating family and for each pollutant (NO_X and particulate), using the equation in paragraph (c) of this section and the applicable factors for the specific engine family.

(iv)(A) Determine and state the source of the needed credits according to quarterly projected production for engine families requiring credits for certification.

(B) State where the quarterly projected credits will be applied for engine families generating credits.

(C) Credits may be obtained from or applied to only engine families within the same averaging set as described in paragraphs (d) and (e) of this section. Credits available for averaging, trading, or banking as defined in § 86.090–2, may be applied to a given engine famil(y) (ies), or reserved as defined in § 86.091–2.

(2) Based on this information each manufacturer's certification application must demonstrate:

(i) That at the end of model year production, each engine family has a net emissions credit balance of zero or more using the methodology in paragraph (c) of this section with any credits obtained from averaging, trading or banking.

(ii) The source of the credits to be used to comply with the emission standard if the FEL exceeds the standard, or where credits will be applied if the FEL is less than the emission standard. In cases where credits are being obtained, each engine family involved must state specifically the source (manufacturer/engine family) of the credits being used. In cases where credits are being generated/supplied, each engine family involved must state specifically the designated use (manufacturer/engine family or reserved) of the credits involved. All such reports shall include all credits involved in averaging, trading or banking.

(3) During the model year manufacturers must:

(i) Monitor projected versus actual production to be certain that compliance with the emission standards is achieved at the end of the model year.

(ii) Provide the end of-model year reports required under § 86.091–23.

(iii) Maintain the quarterly records required under § 86.091–7(c)(8).

(4) Projected credits based on information supplied in the certification application may be used to obtain a certificate of conformity. However, any such credits may be revoked based on review of end-of-model year reports, follow-up audits, and any other

verification steps deemed appropriate by the Administrator.

(5) Compliance under averaging, banking, and trading will be determined at the end of the model year. Engine families without an adequate amount of actual NO_X and/or particulate emission credits will violate the conditions of the certificate of conformity. The certificates of conformity may be voided *ab initio* for those engine families.

(6) If EPA or the manufacturer determines that a reporting error occurred on an end-of-year report previously submitted to EPA under this section, the manufacturer's credits and credit calculations will be recalculated. Erroneous positive credits will be void. Erroneous negative credit balances may be adjusted by EPA.

(i) If EPA review of a manufacturer's end-of-year report indicates an inadvertent credit shortfall, the manufacturer will be permitted to purchase the necessary credits to bring the credit balance for that engine family to zero, at the ratio of 1.2 credits purchased for every credit needed to bring the balance to zero. If sufficient credits are not available to bring the credit balance for the engine family in question to zero, EPA may void the certificate for that engine family *ab initio*.

(ii) If within 90 days of receipt of the manufacturer's end-of-year report, EPA review determines a reporting error in the manufacturer's favor (*i.e.*, resulting in a positive credit balance) or if the manufacturer discovers such an error within 90 days of EPA receipt of the end-of-year report, the credits will be restored for use by the manufacturer.

(c)(1) For each participating engine family, NO_X and particulate emission credits (positive or negative) are to be calculated according to one of the following equations and rounded, in accordance with ASTM E29–67, to the nearest one-tenth of a Megagram (Mg). Consistent units are to be used throughout the equation.

For determining credit need for all engine families and credit availability for engine families generating credits for averaging programs only:

$$\text{Emission credits} = (\text{Std} - \text{FEL}) \times (\text{CF}) \times (\text{UL}) \times (\text{Production}) \times (10^{-6})$$

For determining credit availability for engine families generating credits for trading or banking programs:

$$\text{Emission credits} = (\text{Std} - \text{FEL}) \times (\text{CF}) \times (\text{UL}) \times (\text{Production}) \times (10^{-6}) \times (0.8)$$

Where:

Std=the current and applicable heavy-duty engine NO_X or particulate emission standard in grams per brake horsepower hour or grams per Megajoule.

FEL=the NO_X or particulate family emission limit for the engine family in grams per brake horsepower-hour or grams per Megajoule.

CF=a transient cycle conversion factor in BHP-hr/mi or MJ/mi, as given in paragraph (c)(2) of this section.

UL=the useful life, or alternative life as described in paragraph (f) of § 86.090–21, for the given engine family in miles.

Production=the number of engines produced for U.S. sales within the given engine family during the model year. Quarterly production projections are used for initial certification. Actual production is used for end-of-year compliance determination.

0.8=a one-time discount applied to all credits to be banked or traded within the model year generated. Banked credits traded in a subsequent model year will not be subject to an additional discount. Banked credits used in a subsequent model year's averaging program will not have the discount restored.

(2) The transient cycle conversion factor is the total (integrated) cycle brake horsepower-hour or Megajoules, divided by the equivalent mileage of the applicable transient cycle. For Otto-cycle heavy-duty engines, the equivalent mileage is 6.3 miles. For diesel heavy-duty engines, the equivalent mileage is 6.5 miles. When more than one configuration is chosen by EPA to be tested in the certification of an engine family (as described in § 86.085–24), the conversion factor used is to be based upon the configuration generating the highest conversion factor when determining credit need and the lowest conversion factor when determining credit availability for banking, trading or averaging.

(d) *Averaging sets for NO_X emission credits:* The averaging and trading of

NO_X emission credits will only be allowed between heavy-duty engine families in the same averaging set and in the same regional category. Engines produced for sale in California constitute a separate regional category than engines produced for sale in the other 49 states. Banking and trading are not applicable to engines sold in California. The averaging sets for the averaging and trading of NO_X emission credits for heavy-duty engines are defined as follows:

(1) For Otto-cycle heavy-duty engines:

(i) Otto-cycle heavy-duty engines constitute an averaging set. Averaging and trading among all Otto-cycle heavy-duty engine families is allowed. There are no subclass restrictions.

(ii) Gasoline-fueled heavy-duty vehicles certified under the provisions of § 86.085–1(b) may not average or trade credits with gasoline-fueled heavy-duty Otto-cycle engines, but may average or trade credits with light-duty trucks.

(2) For diesel cycle heavy-duty engines:

(i) Each of the three primary intended service classes for heavy-duty diesel engines, as defined in § 86.090–2, constitute an averaging set. Averaging and trading among all diesel cycle engine families within the same primary service class is allowed.

(ii) Urban buses are treated as members of the primary intended service class where they would otherwise fall.

(e) *Averaging sets for particulate emission credits.* The averaging and trading of particulate emission credits will only be allowed between diesel cycle heavy-duty engine families in the same averaging set and in the same regional category. Engines produced for sale in California constitute a separate regional category than engines produced for sale in the other 49 states. Banking and trading are not applicable to engines sold in California. The averaging sets for the averaging and trading of particulate emission credits for diesel cycle heavy-duty engines are defined as follows:

(1) Engines intended for use in urban buses constitute a separate averaging set from all other heavy-duty engines. Averaging and trading among all diesel cycle bus engine families is allowed.

(2) For heavy-duty engines, exclusive of urban bus engines, each of the three primary intended service classes for heavy-duty diesel cycle engines, as defined in § 86.090–2, constitute an averaging set. Averaging and trading between diesel cycle engine families within the same primary service class is allowed.

(3) Otto-cycle engines may not participate in particulate averaging, trading, or banking.

(f) Banking of NO_X and particulate emission credits:

(1) *Credit deposits.* (i) Under this phase of the banking program, emission credits may be banked from engine families produced during the three model years prior to the effective model year of the new HDE NO_X or particulate emission standard. Credits may not be banked from engine families made during any other model years.

(ii) Manufacturers may bank credits only after the end of the model year and after EPA has reviewed their end-of-year report. During the model year and before submittal of the end-of-year report, credits originally designated in the certification process for banking will be considered reserved and may be redesignated for trading or averaging.

(2) *Credit withdrawals.* (i) After being generated, banked/reserved credits shall be available for use three model years prior to, through three model years immediately after the effective date of the new HDE NO_X or particulate emission standard, as applicable. However, credits not used within the period specified above shall be forfeited.

(ii) Manufacturers withdrawing banked emission credits shall indicate so during certification and in their credit reports, as described in § 86.091–23.

(3) *Use of banked emission credits.* The use of banked credits shall be within the averaging set and other restrictions described in paragraphs (d) and (e) of this section, and only for the following purposes:

(i) Banked credits may be used in averaging, trading, or in any combination thereof, during the certification period. Credits declared for banking from the previous model year but unreviewed by EPA may also be used.

However, they may be revoked at a later time following EPA review of the end-of-year report or any subsequent audit actions.

(ii) Banked credits may not be used for NO_X or particulate averaging and trading to offset emissions that exceed an FEL. Banked credits may not be used to remedy an in-use nonconformity determined by a Selective Enforcement Audit or by recall testing. However, banked credits may be used for subsequent production of the engine family if the manufacturer elects to recertify to a higher FEL.

(g)(1) The following paragraphs assume NO_X and particulate nonconformance penalties (NCPs) will be available for the 1991 and later model year HDEs.

(2) Engine families paying an NCP for noncompliance of any emission standard *may not:*

(i) Participate in the averaging program,

(ii) Generate emission credits for any pollutant under banking and trading, and

(iii) Use emission credits for any pollutant from banking and trading.

(3) If a manufacturer has any engine family to which application of NCPs *and* averaging, banking, and trading credits is desired, that family must be separated into two distinct families. One family, whose FEL equals the standard, must use NCPs only, while the other, whose FEL does not equal the standard, must use emission credits only.

(4) If a manufacturer has any engine family in a given averaging set which is using NO_X and/or particulate NCPs, none of that manufacturer's engine families in that averaging set may generate credits for banking and trading.

(h) In the event of a negative credit balance in a trading situation, both the buyer and the seller would be liable.

(i) Certification fuel used for credit generation must be of a type that is both available in use and expected to be used by the engine purchaser. Therefore, upon request by the Administrator, the engine manufacturer must provide information acceptable to the Administrator that the designated fuel is readily available commercially and would be used in customer service.

[55 FR 30622, July 26, 1990, as amended at 55 FR 46628, Nov. 5, 1990]

§ 86.091–21 Application for certification.

(a) A separate application for a certificate of conformity shall be made for each set of standards (or family emission limits, as appropriate) and each class of new motor vehicles or new motor vehicle engines. Such application shall be made to the Administrator by the manufacturer and shall be updated and corrected by amendment.

(b) The application shall be in writing, signed by an authorized representative of the manufacturer, and shall include the following:

(1)(i) Identification and description of the vehicles (or engines) covered by the application and a description of their engine (vehicles only), emission control system and fuel system components. This shall include a detailed description of each auxiliary emission control device (AECD) to be installed in or on any certification test vehicle (or certification test engine).

(ii)(A) The manufacturer shall provide to the Administrator in the application for certification:

(*1*) A list of those parameters which are physically capable of being adjusted (including those adjustable parameters for which access is difficult) and that, if adjusted to settings other than the manufacturer's recommended setting, may affect emissions;

(*2*) A specification of the manufacturer's intended physically adjustable range of each such parameter, and the production tolerances of the limits or stops used to establish the physically adjustable range;

(*3*) A description of the limits or stops used to establish the manufacturer's intended physically adjustable range of each adjustable parameter, or any other means used to inhibit adjustment;

(*4*) The nominal or recommended setting, and the associated production tolerances, for each such parameter.

(B) The manufacturer may provide, in the application for certification, information relating to why certain parameters are not expected to be adjusted in actual use and to why the physical limits or stops used to establish the physically adjustable range of each parameter, or any other means used to inhibit adjustment, are effective in preventing adjustment of parameters on in-use vehicles to settings outside the manufacturer's intended physically adjustable ranges. This may include results of any tests to determine the difficulty of gaining access to an adjustment or exceeding a limit as intended or recommended by the manufacturer.

(C) The Administrator may require to be provided detailed drawings and descriptions of the various emission related components, and/or hardware samples of such components, for the purpose of making his determination of which vehicle or engine parameter will be subject to adjustment for new certification and Selective Enforcement Audit testing and of the physically adjustable range for each such vehicle or engine parameter.

(2) Projected U.S. sales data sufficient to enable the Administrator to select a test fleet representative of the vehicles (or engines) for which certification is requested. The sales data shall also include the altitude of intended sale for light-duty trucks.

(3) A description of the test equipment and fuel proposed to be used.

(4)(i) For light-duty vehicles and light-duty trucks, a description of the test procedures to be used to establish the evaporative emission deterioration factors required to be determined and supplied in § 86.091–23(b)(2).

(ii) For heavy-duty vehicles equipped with gasoline-fueled or methanol-fueled engines, the Administrator does not assume that each evaporative emission family-evaporative emission control system combination will deteriorate in a unique manner during the useful life of the vehicle. The manufacturer shall therefore identify those evaporative emission deterioration factors which shall be applied to the various evaporative emission family-evaporative emission control system combinations which are expected to exhibit similar deterioration characteristics during the useful life of the vehicle.

(5)(i)(A) A description of the test procedures to be used to establish the durability data or the exhaust emission deterioration factors required to be determined and supplied in § 86.091–23(b)(1).

(B) A statement of the useful life of each light-duty truck engine family or heavy-duty engine family.

(C) For engine families provided an alternative useful-life period under paragraph (f) of this section, a statement of that alternative period and a brief synopsis of the justification.

(ii) For heavy-duty diesel engine families, a statement of the primary intended service class (light, medium, or heavy) and an explanation as to why that service class was selected. Each diesel engine family shall be certified under one primary intended service class only. After reviewing the guidance in § 86.090–2, the class shall be determined on the basis of which class best represents the majority of the sales of that engine family.

(iii)(A) For each light-duty truck engine family and each heavy-duty engine family, a statement of recommended maintenance and procedures necessary to assure that the vehicles (or engines) covered by a certificate of conformity in operation conform to the regulations, and a description of the program for training of personnel for such maintenance, and the equipment required.

(B) A description of vehicle adjustments or modifications necessary, if any, to assure that light-duty vehicles and light-duty trucks covered by a certificate of conformity conform to the regulations while being operated at any altitude locations, and a statement of the altitude at which the adjustments or modifications apply.

(iv) At the option of the manufacturer, the proposed composition of the emission-data test fleet or (where applicable) the durability-data test fleet.

(6)(i)(A) If the manufacturer elects to participate in the particulate averaging program for diesel light-duty vehicles and/or diesel light-duty trucks, the application must list the particulate FEL and the projected U.S. (49-

state) production volume, by quarter, of the family for the model year.

(B) The manufacturer shall choose the level of the family particulate emission limits, accurate to one-hundredth of a gram per mile.

(C) The manufacturer may at any time during production elect to change the level of any family particulate emission limit(s) by submitting the new limit(s) to the Administrator and by demonstrating compliance with the limit(s) as described in § 86.090–2 and § 86.091–28(b)(5)(i).

(ii)(A) If the manufacturer elects to participate in the NO_X averaging program for light-duty trucks, the application must list the NO_X FEL and the projected U.S. (49-state) production volume, by quarter, of the family for the model year.

(B) The manufacturer shall choose the level of the family NO_X emission limits, accurate to one-tenth of a gram per mile.

(C) The manufacturer may at any time during production elect to change the level of any family NO_X emission limit(s) by submitting the new limits to the Administrator and by demonstrating compliance with the limit(s) as described in § 86.088–2 and 86.091–28(b)(5)(ii).

(iii) If the manufacturer elects to participate in any of the particulate and/or the NO_X averaging, trading, or banking programs for heavy-duty engines, the application must list the information required in § 86.091–15 and § 86.091–23.

(7)(i) For Otto-cycle heavy-duty engines, the application must state whether the engine family is being certified for use in all vehicles regardless of their Gross Vehicle Weight Rating (see § 86.091–10 (a)(1)(i) and (a)(3)(i)), or, only for use in vehicles with a Gross Vehicle Weight Rating greater than 14,000 pounds.

(ii) If the engine family is being certified for use in all vehicles and, is being certified to the emission standards applicable to Otto-cycle engines for use only in vehicles with a Gross Vehicle Weight Rating over 14,000 pounds under the provisions of paragraph (a)(3) of § 86.091–10, then the application must also attest that the engine family, together with all other engine families being certified under the provisions of paragraph (a)(3) of § 86.091–10, represent no more than 5 percent of model year sales of the manufacturer of all Otto-cycle heavy-duty engines for use in vehicles with Gross Vehicle Weight Ratings of up to 14,000 pounds.

(c) Complete copies of the application and of any amendments thereto, and all notifications under § 86.079–32, § 86.079–33, and § 86.082–34 shall be submitted in such multiple copies as the Administrator may require.

(d) Incomplete light-duty trucks shall have a maximum completed curb weight and maximum completed frontal area specified by the manufacturer.

(e) For vehicles equipped with gasoline-fueled or methanol-fueled heavy-duty engines, the manufacturer shall specify a maximum nominal fuel tank capacity for each evaporative emission family-evaporative emission control system combination.

(f) Light-duty truck and heavy-duty engine manufacturers who believe that the useful life periods of § 86.090–2 are significantly unrepresentative for one or more engine families (either too long or too short), may petition the Administrator to provide an alternative useful-life period. This petition must include the full rationale behind the request together with any supporting data and other evidence. Based on this or other information the Administrator may assign an alternative useful-life period. Any petition should be submitted in a timely manner, to allow adequate time for a thorough evaluation.

(Secs. 202, 203, 206, 207, 208, 301a, Clean Air Act, as amended; 42 U.S.C. 7521, 7522, 7525, 7541, 7542, 7601a)

[50 FR 10655, Mar. 15, 1985, as amended at 52 FR 47867, Dec. 16, 1987; 54 FR 14469, Apr. 11, 1989; 55 FR 30625, July 26, 1990]

§ 86.091–23 Required data.

(a) The manufacturer shall perform the tests required by the applicable test procedures, and submit to the Administrator the following information: *Provided, however*, That if requested by the manufacturer, the Administrator may waive any requirement of this section for testing of vehicle (or engine) for which emission data are available

or will be made available under the provisions of § 86.091–29.

(b)(1)(i) Exhaust emission durability data on such light-duty vehicles tested in accordance with applicable test procedures and in such numbers as specified, which will show the performance of the systems installed on or incorporated in the vehicle for extended mileage, as well as a record of all pertinent maintenance performed on the test vehicles.

(ii) Exhaust emission deterioration factors for light-duty trucks and heavy-duty engines, and all test data that are derived from the testing described under § 86.091–21(b)(4)(iii)(A), as well as a record of all pertinent maintenance. Such testing shall be designed and conducted in accordance with good engineering practice to assure that the engines covered by a certificate issued under § 86.091–30 will meet the emission standards (or family emission limits, as appropriate) in § 86.091–9, § 86.091–10, or § 86.091–11 as appropriate, in actual use for the useful life of the engine.

(2) For light-duty vehicles and light-duty trucks, evaporative emission deterioration factors for each evaporative emission family-evaporative emission control system combination and all test data that are derived from testing described under § 86.091–21(b)(4)(i) designed and conducted in accordance with good engineering practice to assure that the vehicles covered by a certificate issued under § 86.091–30 will meet the evaporative emission standards in § 86.091–8 or § 86.091–9, as appropriate, for the useful life of the vehicle.

(3) For heavy-duty vehicles equipped with gasoline-fueled or methanol-fueled engines, evaporative emission deterioration factors for each evaporative emission family-evaporative emission control system combination identified in accordance with § 86.091–21(b)(4)(ii). Furthermore, a statement that the test procedure(s) used to derive the deterioration factors includes, but need not be limited to, a consideration of the ambient effects of ozone and temperature fluctuations, and the service accumulation effects of vibration, time, and vapor saturation and purge cycling. The deterioration factor test procedure shall be designed and conducted in accordance with good engineering practice to assure that the vehicles covered by a certificate issued under § 86.091–30 will meet the evaporative emission standards in § 86.091–10 and § 86.091–11 in actual use for the useful life of the engine. Furthermore, a statement that a description of the test procedure, as well as all data, analyses and evaluations, is available to the Administrator upon request.

(4)(i) For heavy-duty vehicles with a Gross Vehicle Weight Rating of up to 26,000 lbs and equipped with gasoline-fueled or methanol-fueled engines, a written statement to the Administrator certifying that the manufacturer's vehicles meet the standards of § 86.091–10 or § 86.091–11 (as applicable) as determined by the provisions of § 86.091–28. Furthermore, a written statement to the Administrator that all data, analyses, test procedures, evaluations, and other documents, on which the above statement is based, are available to the Administrator upon request.

(ii) For heavy-duty vehicles with a Gross Vehicle Weight Rating of greater than 26,000 lbs and equipped with gasoline-fueled or methanol-fueled engines, a written statement to the Administrator certifying that the manufacturer's evaporative emission control systems are designed, using good engineering practice, to meet the standards of § 86.091–10 or § 86.091–11 (as applicable) as determined by the provisions of § 86.091–28. Furthermore, a written statement to the Administrator that all data, analyses, test procedures, evaluations, and other documents, on which the above statement is based, are available to the Administrator upon request.

(c) *Emission data.* (1) Emission data, including in the case of methanol fuel, methanol, formaldehyde and total hydrocarbon equivalent on such vehicles tested in accordance with applicable test procedures and in such numbers as specified. These data shall include zero-mile data, if generated and emission data generated for certification as required under § 86.090–26(a)(3)(i) or § 86.090–26(a)(3)(ii). In lieu of providing emission data on idle CO emissions, smoke emissions or particulate emissions from methanol-fueled diesel certification vehicles the Administrator

may, on request of the manufacturer, allow the manufacturer to demonstrate (on the basis of previous emission tests, development tests, or other information) that the engine will conform with the applicable emission standards of § 86.090–8 or § 86.090–9.

(2) Certification engines. (i) Emission data on such engines tested in accordance with applicable emission test procedures of this subpart and in such numbers as specified. These data shall include zero-hour data, if generated, and emission data generated for certification as required under § 86.090–26(c)(4). In lieu of providing emission data on idle CO emissions or particulate emissions from methanol-fueled diesel certification engines, or on CO emissions from petroleum-fueled or methanol-fueled diesel certification engines the Administrator may, on request of the manufacturer, allow the manufacturer to demonstrate (on the basis of previous emission tests, development tests, or other information) that the engine will conform with the applicable emission standards of § 86.091–11.

(ii) For heavy-duty diesel engines, a manufacturer may submit hot-start data only, in accordance with subpart N of this part, when making application for certification. However, for conformity SEA and recall testing by the Agency, both the cold-start and hot-start test data, as specified in subpart N of this part, will be included in the official results.

(d) A statement that the vehicles (or engines) for which certification is requested conform to the requirements in § 86.084–5(b), and that the descriptions of tests performed to ascertain compliance with the general standards in § 86.084–5(b), and the data derived from such tests, are available to the Administrator upon request.

(e)(1) A statement that the test vehicles (or test engines) with respect to which data are submitted to demonstrate compliance with the applicable standards (or family emission limits, as appropriate) of this subpart are in all material respects as described in the manufacturer's application for certification, have been tested in accordance with the applicable test procedures utilizing the fuels and equipment described in the application for certification and that on the basis of such tests the vehicles (or engines) conform to the requirements of this part. If such statements cannot be made with respect to any vehicle (or engine) tested, the vehicle (or engine) shall be identified, and all pertinent data relating thereto shall be supplied to the Administrator. If, on the basis of the data supplied and any additional data as required by the Administrator, the Administrator determines that the test vehicles (or test engine) was not as described in the application for certification or was not tested in accordance with the applicable test procedures utilizing the fuels and equipment as described in the application for certification, the Administrator may make the determination that the vehicle (or engine) does not meet the applicable standards (or family emission limits, as appropriate). The provisions of § 86.091–30(b) shall then be followed.

(2) For evaporative emission durability, or light-duty truck or heavy-duty engine exhaust emission durability, a statement of compliance with paragraph (b)(1)(ii), (b)(2), or (b)(3) of this section, as applicable.

(f) Additionally, manufacturers participating in the particulate averaging program for diesel light-duty vehicles and diesel light-duty trucks shall submit:

(1) In the application for certification, a statement that the vehicles for which certification is requested will not, to the best of the manufacturer's belief, when included in the manufacturer's production-weighted average emission level, cause the applicable particulate standard(s) to be exceeded.

(2) No longer than 90 days after the end of a given model year of production of engine families included in one of the diesel particulate averaging programs, the number of vehicles produced in each engine family at each certified particulate FEL, along with the resulting production-weighted average particulate emission level.

(g) Additionally, manufacturers participating in the NO_X averaging program for light-duty trucks shall submit:

(1) In the application for certification, a statement that the vehicles

for which certification is required will not, to the best of the manufacturer's belief, when included in the manufacturer's production-weighted average emission level, cause the applicable NO_X standard(s) to be exceeded.

(2) No longer than 90 days after the end of a given model year of production of engine families included in the NO_X averaging program, the number of vehicles produced in each engine family at each certified NO_X emission level.

(h) Additionally, manufacturers participating in any of the NO_X and/or particulate averaging, trading, or banking programs for heavy-duty engines shall submit for each participating family:

(1) In the application for certification:

(i) A statement that the engines for which certification is requested will not, to the best of the manufacturer's belief, when included in any of the averaging, trading, or banking programs cause the applicable NO_X or particulate standard(s) to be exceeded.

(ii) The type (NO_X or particulate) and the projected number of credits generated/needed for this family, the applicable averaging set, the projected U.S. (49-state) production volumes, by quarter, NCPs in use on a similar family and the values required to calculate credits as given in § 86.091–15. Manufacturers shall also submit how and where credit surpluses are to be dispersed and how and through what means credit deficits are to be met, as explained in § 86.091–15. The application must project that each engine family will be in compliance with the applicable NO_X and/or particulate emission standards based on the engine mass emissions, and credits from averaging, trading and banking.

(3) End-of-year reports for each engine family participating in any of the averaging, trading, or banking programs.

(i) These reports shall be submitted within 90 days of the end of the model year to: Director, Manufacturers Operations Division (EN–340F), U.S. Environmental Protection Agency, 1200 Pennsylvania Ave., NW., Washington, DC 20460.

(ii) These reports shall indicate the engine family, the averaging set, the actual U.S. (49-state) production volume, the values required to calculate credits as given in § 86.091–15, the resulting type (NO_X or particulate) and number of credits generated/required, and the NCPs in use on a similar NCP family. Manufacturers shall also submit how and where credit surpluses were dispersed (or are to be banked) and how and through what means credit deficits were met. Copies of contracts related to credit trading must also be included or supplied by the broker if applicable. The report shall also include a calculation of credit balances to show that net mass emissions balances are within those allowed by the emission standards (equal to or greater than a zero credit balance). The credit discount factor described in 86.091–15 must be included as required.

(iii) The 49-state production counts for end-of-year reports shall be based on the location of the first point of retail sale (*e.g.*, customer, dealer, secondary manufacturer) by the manufacturer.

(iv) Errors discovered by EPA or the manufacturer in the end-of-year report, including errors in credit calculation, may be corrected up to 90 days subsequent to submission of the end-of-year report. Errors discovered by EPA after 90 days shall be corrected if credits are reduced. Errors in the manufacturer's favor will not be corrected if discovered after the 90 day correction period allowed.

(i) Failure by a manufacturer participating in the averaging, trading, or banking programs to submit any quarterly or end-of-year report (as applicable) in the specified time for all vehicles and engines that are part of an averaging set is a violation of section 203(a)(1) of the Clean Air Act for each such vehicle and engine.

(j) Failure by a manufacturer generating credits for deposit only in either the HDE NO_X or particulate banking programs to submit their end-of-year reports in the applicable specified time period (*i.e.*, 90 days after the end of the model year) shall result in the credits not being available for use until such reports are received and reviewed by EPA. Use of projected credits pending EPA review will not be permitted in these circumstances.

(k) Engine families certified using NCPs are not required to meet the requirements outlined above.

(Secs. 202, 203, 206, 207, 208, 301a, Clean Air Act, as amended; 42 U.S.C. 7521, 7522, 7525, 7541, 7542, 7601a)

[50 FR 10659, Mar. 15, 1985, as amended at 50 FR 29384, July 19, 1985; 54 FR 14473, Apr. 11, 1989; 55 FR 30625, July 26, 1990; 56 FR 64711, Dec. 12, 1991]

§ 86.091–28 Compliance with emission standards.

(a)(1) Paragraph (a) of this section applies to light-duty vehicles.

(2) The applicable exhaust and fuel evaporative emissions standards (and family particulate emission limits, as appropriate) of this subpart apply to the emissions of vehicles for their useful life.

(3) Since it is expected that emission control efficiency will change with mileage accumulation on the vehicle, the emission level of a vehicle which has accumulated 50,000 miles will be used as the basis for determining compliance with the standards (or family particulate emission limit, as appropriate).

(4) The procedure for determining compliance of a new motor vehicle with exhaust emission standards (or family particulate emission limit, as appropriate) is as follows, except where specified by paragraph (a)(7) of this section for the Alternative Durability Program:

(i) Separate emission deterioration factors shall be determined from the exhaust emission results of the durability-data vehicle(s) for each engine-system combination. A separate factor shall be established, as required for compliance with applicable emission standards for exhaust HC, exhaust THCE, exhaust NMHC, exhaust CO, exhaust NO_X and exhaust particulate for each engine-system combination. A separate evaporative emission deterioration factor, as required for compliance with applicable emission standards, shall be determined for each evaporative emission family-evaporative emission control system combination from the testing conducted by the manufacturer.

(A) The applicable results to be used unless excluded by paragraph (a)(4)(i)(A)(*4*) of this section in determining the exhaust emission deterioration factors for each engine-system combination shall be:

(*1*) All valid exhaust emission data from the tests required under § 86.084–26(a)(4) except the zero-mile tests. This shall include the official test results, as determined in § 86.091–29 for all tests conducted on all durability-data vehicles of the combination selected under § 86.085–24(c) (including all vehicles elected to be operated by the manufacturer under § 86.085–24(c)(1)(ii)).

(*2*) All exhaust emission data from the tests conducted before and after the scheduled maintenance provided in § 86.088–25.

(*3*) All exhaust emission data from tests required by maintenance approved under § 86.088–25, in those cases where the Administrator conditioned his approval for the performance of such maintenance on the inclusion of such data in the deterioration factor calculation.

(*4*) The manufacturer has the option of applying an outlier test point procedure to completed durability data within its certification testing program for a given model year. The outlier procedure will be specified by the Administrator. For any pollutant, durability-data test points that are identified as outliers shall not be included in the determination of deterioration factors if the manufacturer has elected this option. The manufacturer shall specify to the Administrator before the certification of the first engine family for that model year, if it intends to use the outlier procedure. The manufacturer may not change procedures after the first engine family of the model year is certified. Where the manufacturer chooses to apply both the outlier procedure and averaging (as allowed under § 86.084–26(a)(6)(i)) to the same data set, the outlier procedure shall be completed prior to applying the averaging procedure.

(B) All applicable exhaust emission results shall be plotted as a function of the mileage on the system, rounded to the nearest mile, and the best fit straight lines, fitted by the method of least squares, shall be drawn through all these data points. The data will be acceptable for use in the calculation of

the deterioration factor only if the interpolated 4,000-mile and 50,000-mile points on this line are within the low-altitude standards provided in §86.087–8. Exceptions to this where data are still acceptable are when a best fit straight line crosses an applicable standard but no data points exceeded the standard, or the best fit straight line crosses an applicable standard with a negative slope (the 4,000-mile interpolated point is higher than the 50,000-mile interpolated point) but the 50,000-mile actual data point is below the standard. An multiplicative exhaust emission deterioration factor shall be calculated for each engine-system combination as follows:

Factor=Exhaust emissions interpolated to 50,000 miles divided by exhaust emissions interpolated to 4,000 miles.

These interpolated values shall be carried out to a minimum of four places to the right of the decimal point before dividing one by the other to determine the deterioration factor. The results shall be rounded to three places to the right of the decimal point in accordance with ASTM E 29–67.

(C)(*1*) An evaporative emissions deterioration factor shall be determined from the testing conducted as described in §86.090–21(b)(4)(i), for each evaporative emission family- evaporative emission control system combination to indicate the evaporative emission level at 50,000 miles relative to the evaporative emission level at 4,000 miles as follows:

Factor = Evaporative emission level at 50,000 miles minus the evaporative emission level at 4,000 miles.

(*2*) The factor in paragraph (a)(4)(i)(C)(*1*) of this section shall be established to a minimum of two places to the right of the decimal.

(ii)(A) The official exhaust emission test results for each emission-data vehicle at the selected test point shall be multiplied by the appropriate deterioration factor: *Provided*, that if a deterioration factor as computed in paragraph (a)(4)(i)(B) of this section is less than one, that deterioration factor shall be one for the purposes of this paragraph.

(B) The official evaporative emission test results for each evaporative emission-data vehicle at the selected test point shall be adjusted by addition of the appropriate deterioration factor: *Provided*, that if a deterioration factor as computed in paragraph (a)(4)(i)(C) of this section is less than zero, that deterioration factor shall be zero for the purposes of this paragraph.

(iii) The emissions to compare with the standard (or the family particulate emission limit, as appropriate) shall be the adjusted emissions of paragraphs (a)(4)(ii) (A) and (B) of this section for each emission-data vehicle. Before any emission value is compared with the standard (or the family particulate emission limit, as appropriate), it shall be rounded, in accordance with ASTM E 29–67, to two significant figures. The rounded emission values may not exceed the standard (or the family particulate emission limit, as appropriate).

(iv) Every test vehicle of an engine family must comply with the exhaust emission standards (or the family particulate emission limit, as appropriate), as determined in paragraph (a)(4)(iii) of this section, before any vehicle in that family may be certified.

(v) Every test vehicle of an evaporative emission family must comply with the evaporative emission standard, as determined in paragraph (a)(4)(iii) of this section, before any vehicle in that family may be certified.

(5) If a manufacturer chooses to change the level of any family particulate emission limit(s) in the particulate averaging program, compliance with the new limit(s) must be based upon existing certification data.

(6) If a manufacturer chooses to participate in the diesel particulate averaging program, the production-weighted average of the family particulate emission limits of all affected engine families must comply with the particulate standards in §86.087–8(a)(1)(iv), or the composite particulate standard defined in §86.085–2, as appropriate, at the end of the production year.

(7) The procedure to determine the compliance of new motor vehicles in the Alternative Durability Program (described in §86.085–13) is the same as described in paragraphs (a)(4)(iii) through (a)(4)(v) of this section. For

the engine families that are included in the Alternative Durability Program, the exhaust emission deterioration factors used to determine compliance shall be those that the Administrator has approved under § 86.085–13(c). The evaporative emission deterioration factor for each evaporative emission family shall be determined and applied according to paragraph (a)(4) of this section. The procedures to determine the minimum exhaust emissions deterioration factors required under § 86.085–13(d) are as follows:

(i) Separate deterioration factors shall be determined from the exhaust emission results of the durability-data vehicles for each engine family group. A separate factor as necessary to establish compliance with applicable emission standards shall be established for exhaust HC, exhaust THCE, exhaust NMHC, exhaust CO and exhaust NO_X for each engine family group. The evaporative emission deterioration factor for each evaporative family will be determined and applied in accordance with paragraph (a)(4) of this section.

(ii) The deterioration factors for each engine family group shall be determined by the Administrator using historical durability data from as many as three previous model years. These data will consist of deterioration factors generated by durability-data vehicles representing certified engine families and of deterioration factors from vehicles selected under § 86.085–24(h). The Administrator shall determine how these data will be combined for each engine family group.

(A) The test result to be used in the calculation of each deterioration factor to be combined for each engine family group shall be those test results specified in paragraph (a)(4)(i)(A) of this section.

(B) For each durability-data vehicles selected under § 86.085–24(h), all applicable exhaust emissions results shall be plotted as a function of the mileage on the system rounded to the nearest mile, and the best fit straight lines, fitted by method of least squares, shall be drawn through all these data points. The exhaust deterioration factor for each durability-data vehicles shall be calculated as specified in paragraph (a)(4)(i)(B) of this section.

(C) *Line-crossing.* For the purposes of paragraph (a)(5) of this section, line crossing occurs when either of the interpolated 4,000- and 50,000-mile points of the best fit straight line exceeds the applicable emission standard and at least one applicable data point exceeds the standard.

(*1*) The Administrator will not accept for certification line-crossing data from preproduction durability-data vehicles selected under § 86.085–24(c), § 86.085–24(h)(2), or (h)(3).

(*2*) The Administrator will not accept for certification line-crossing data from production durability-data vehicles selected under § 86.085–24(h)(1) unless the 4,000-mile test result multiplied by the engine family group deterioration factor does not exceed the applicable emission standards. The deterioration factors used for this purpose shall be those that were used in the certification of the production vehicle. Manufacturers may calculate this product immediately after the 4,000-mile test of the vehicle. If the product exceeds the applicable standards, the manufacturer may, with the approval of the Administrator, discontinue the vehicle and substitute a new vehicle. The manufacturer may continue the original vehicle, but the data will not be acceptable if line crossing occurs.

(b)(1) Paragraph (b) of this section applies to light-duty trucks.

(2) The exhaust and evaporative emission standards (and family emission limits, as appropriate) of § 86.091–9 apply to the emissions of vehicles for their useful life.

(3) Since emission control efficiency generally decreases with the accumulation of mileage on the vehicle, deterioration factors will be used in combination with emission-data vehicle test results as the basis for determining compliance with the standards (or family emission limits, as appropriate).

(4)(i) Paragraph (b)(4) of this section describes the procedure for determining compliance of a new vehicle with exhaust emission standards (or family emission limits, as appropriate), based on deterioration factors supplied by the manufacturers, except where specified by paragraph (b)(5) of this section for the Alternative Durability Program.

(ii) Separate exhaust emission deterioration factors, determined from tests of vehicles, engines, subsystems or components conducted by the manufacturer, shall be supplied for each engine-system combination. Separate factors shall be established as required for compliance with applicable emission standards for transient HC, THCE, NMHC, CO, and NO_X. idle CO and exhaust particulate.

(iii) For transient HC, THCE, NMHC and CO, and NO_X. idle CO and/or exhaust particulate as appropriate, the official exhaust emission results for each emission-data vehicle at the selected test point shall be adjusted by multiplication by the appropriate deterioration factor. However, if the deterioration factor supplied by the manufacturer is less than one, it shall be one for the purposes of this paragraph.

(iv) The emission values to compare with the standards (or family emission limits, as appropriate) shall be the adjusted emission values of paragraph (b)(4)(iii) of this section rounded to two significant figures in accordance with ASTM E 29–67 for each emission-data engine.

(5)(i) Paragraph (b)(5)(i) of this section applies only to manufacturers electing to participate in the particulate averaging program.

(A) If a manufacturer chooses to change the level of any family particulate emission limit(s), compliance with the new limit(s) must be based upon existing certification data.

(B) The production-weighted average of the family particulate emission limits of all applicable engine families, rounded to two significant figures in accordance with ASTM E 29–67, must comply with the particulate standards in §86.088–9 (a)(1)(iv) or (d)(1)(iv), or the composite particulate standard as defined in §86.085–2, as appropriate, at the end of the product year.

(ii) Paragraph (b)(5)(ii) of this section applies only to manufacturers electing to participate in the NO_X averaging program.

(A) If a manufacturer chooses to change the level of any family NO_X emission limit(s), compliance with the new limit(s) must be based upon existing certification data.

(B) The production-weighted average of the family NO_X emission limits of all applicable engine families, rounded to two significant figures in accordance with ASTM E 29–67, must comply with the NO_X emission standards of §86.088–9(a)(1)(iii) (A) or (B), or of §86.088–9(d)(1)(iii) (A) or (B), or the composite NO_X standard as defined in §86.088–2, at the end of the product year.

(6) The procedure to determine the compliance of new motor vehicles in the Alternative Durability Program (described in §86.085–13) is the same as described in paragraph (b)(4)(iv), (b)(7)(iv) and (b)(8) of this section. For the engine families that are included in the Alternative Durability Program, the exhause emission deterioration factors used to determine compliance shall be those that the Administrator has approved under §86.085–13(c). The evaporative emission deterioration factor for each evaporative emission family shall be determined and applied according to paragraph (b)(7) of this section. The procedures to determine the minimum exhaust emissions deterioration factors required under §86.085–13(d) are as follows:

(i) Separate deterioration factors shall be determined from the exhaust emission results of the durability-data vehicles for each engine family group. A separate factor shall be established for exhaust HC, exhaust THCE or exhaust NMHC as appropriate, and exhaust CO and exhaust NO_X for each engine family group. The evaporative emission deterioration factor for each evaporative family will be determined and applied in accordance with paragraph (b)(6) of this section.

(ii) The deterioration factors for each engine family group shall be determined by the Administrator using historical durability data from as many as three previous model years. These data will consist of deterioration factors generated by durability-data vehicles representing certified engine families and of deterioration factors from vehicles selected under §86.085–24(h). The Administrator shall determine how these data will be combined for each engine family group.

(A) The test results to be used in the calculations of each deterioration factor to be combined for each engine

family group shall be those test results specified in paragraph (a)(4)(i)(A) of this section.

(B) For each durability-data vehicle selected under § 86.085–24(h), all applicable exhaust emission results shall be plotted as a function of the mileage on the system rounded to the nearest mile, and the best fit straight lines, fitted by the method of least squares, shall be drawn through all these data points. The exhaust deterioration factor for each durability-data vehicle shall be calculated as specified in paragraph (a)(4)(i)(B) of this section.

(C) *Line crossing.* For the purposes of paragraph (b)(5) of this section, line crossing occurs when either of the interpolated 4,000- and 120,000-mile points of the best fit straight line exceeds the applicable emission standard and at least one applicable data point exceeds the standard.

(*1*) The Administrator will not accept for certification line-crossing data from preproduction durability-data vehicles selected under § 86.085–24(c)(1), or § 86.085–24 (h)(2) or (h)(3).

(*2*) The Administrator will not accept for certification line-crossing data from production durability-data vehicles selected under § 86.085–24(h)(1) unless the 4,000-mile test result multiplied by the engine family group deterioration factor does not exceed the applicable emission standard. The deterioration factors used for this purpose shall be those that were used in the certification of the production vehicle. Manufacturers may calculate this product immediately after the 4,000-mile test of the vehicle. If the product exceeds the applicable standard, the manufacturer may, with the approval of the Administrator, discontinue the vehicle and substitute a new vehicle. The manufacturer may continue the original vehicle, but the data will not be acceptable if line crossing occurs.

(7)(i) Paragraph (b)(7) of this section describes the procedure for determining compliance of a new vehicle with fuel evaporative emission standards. The procedure described here shall be used for all vehicles in all model years.

(ii) The manufacturer shall determine, based on testing described in § 86.091–21(b)(4)(i), and supply an evaporative emission deterioration factor for each evaporative emission family-evaporative emission control system combination. The factor shall be calculated by subtracting the emission level at the selected test point from the emission level at the useful life point.

(iii) The official evaporative emission test results for each evaporative emission-data vehicle at the selected test point shall be adjusted by the addition of the appropriate deterioration factor. However, if the deterioration factor supplied by the manufacturer is less than zero, it shall be zero for the purposes of this paragraph.

(iv) The emission value to compare with the standards shall be the adjusted emission value of paragraph (b)(7)(iii) of this section rounded to two significant figures in accordance with ASTM E 29–67 for each evaporative emission-data vehicle.

(8) Every test vehicle of an engine family must comply with all applicable standards (and family emission limits, as appropriate), as determined in paragraphs (b)(4)(iv) and (b)(7)(iv) of this section, before any vehicle in that family will be certified.

(c)(1) Paragraph (c) of this section applies to heavy-duty engines.

(2) The exhaust emission standards (or family emission limits, as appropriate) for Otto-cycle engines in § 86.090–10 or for diesel engines in § 86.091–11 apply to the emissions of engines for their useful life.

(3) Since emission control efficiency generally decreases with the accumulation of service on the engine, deterioration factors will be used in combination with emission-data engine test results as the basis for determining compliance with the standards.

(4)(i) Paragraph (c)(4) of this section describes the procedure for determining compliance of an engine with emission standards (or family emission limits, as appropriate), based on deterioration factors supplied by the manufacturer.

(ii) Separate exhaust emission deterioration factors, determined from tests of engines, subsystems or components conducted by the manufacturer,

shall be supplied for each engine-system combination. For Otto-cycle engines, separate factors shall be established for transient HC, THCE or NMHC as appropriate, CO and NO_X; and idle CO, for those engines utilizing aftertreatment technology (e.g., catalytic converters). For diesel engines, separate factors shall be established for transient HC, THCE or NMHC as appropriate, CO, NO_X and exhaust particulate. For diesel smoke testing, separate factors shall also be established for the acceleration mode (designated as ''A''), the lugging mode (designated as ''B''), and peak opacity (designated as ''C'').

(iii)(A) Paragraph (c)(4)(iii)(A) of this section applies to Otto-cycle heavy-duty engines.

(*1*) *Otto-cycle heavy-duty engines not utilizing aftertreatment technology (e.g., catalytic converters).* For transient HC, THCE or NMHC as appropriate, CO and NO_X. the official exhaust emission results for each emission-data engine at the selected test point shall be adjusted by the addition of the appropriate deterioration factor. However, if the deterioration factor supplied by the manufacturer is less than zero, it shall be zero for the purposes of this paragraph.

(*2*) *Otto-cycle heavy-duty engines utilizing aftertreatment technology (e.g., catalytic converters).* For transient HC, THCE or NMHC as appropriate, CO and NO_X. and for idle CO, the official exhaust emission results for each emission-data engine at the selected test point shall be adjusted by multiplication by the appropriate deterioration factor. However, if the deterioration factor supplied by the manufacturer is less than one, it shall be one for the purposes of this paragraph.

(B) Paragraph (c)(4)(iii)(B) of this section applies to diesel heavy-duty engines.

(*1*) *Diesel heavy-duty engines not utilizing aftertreatment technology (e.g., particulate traps).* For transient HC, THCE or NMHC as appropriate, CO, NO_X and exhaust particulate, the official exhaust emission results for each emission-data engine at the selected test point shall be adjusted by the addition of the appropriate deterioration factor. However, if the deterioration factor supplied by the manufacturer is less than zero, it shall be zero for the purposes of this paragraph.

(*2*) *Diesel heavy-duty engines utilizing aftertreatment technology (e.g., particulate traps).* For transient HC, THCE or NMHC as appropriate, CO, NO_X and exhaust particulate, the official exhaust emission results for each emission-data engine at the selected test point shall be adjusted by multiplication by the appropriate deterioration factor. However, if the deterioration factor supplied by the manufacturer is less than one, it shall be one for the purposes of this paragraph.

(*3*) *Diesel heavy-duty engines only.* For acceleration smoke (''A''), lugging smoke (''B''), and peak smoke (''C''), the official exhaust emission results for each emission-data engine at the selected test point shall be adjusted by the addition of the appropriate deterioration factor. However, if the deterioration factor supplied by the manufacturer is less than zero, it shall be zero for the purposes of this paragraph.

(iv) The emission values to compare with the standards (or family emission limits, as appropriate) shall be the adjusted emission values of paragraph (c)(4)(iii) of this section, rounded to the same number of significant figures as contained in the applicable standard in accordance with ASTM E 29–67, for each emission-data engine.

(5)–(6) [Reserved]

(7) Every test engine of an engine family must comply with all applicable standards (or family emission limits, as appropriate), as determined in paragraph (c)(4)(iv) of this section, before any engine in that family will be certified.

(d)(1) Paragraph (d) of this section applies to heavy-duty vehicles required to comply with evaporative emission standards.

(2) The applicable evaporative emission standard in § 86.091–10 or § 86.091–11 applies to the emissions of vehicles for their useful life.

(3)(i) For vehicles with a GVWR of up to 26,000 pounds, because it is expected that emission control efficiency will change during the useful life of the vehicle, an evaporative emission deterioration factor shall be determined from the testing described in § 86.088–23(b)(3) for each evaporative emission family-

evaporative emission control system combination to indicate the evaporative emission control system deterioration during the useful life of the vehicle (minimum 50,000 miles). The factor shall be established to a minimum of two places to the right of the decimal.

(ii) For vehicles with a GVWR of greater than 26,000 pounds, because it is expected that emission control efficiency will change during the useful life of the vehicle, each manufacturer's statement as required in § 86.088–23(b)(4)(ii) shall include, in accordance with good engineering practice, consideration of control system deterioration.

(4) The evaporative emission test results, if any, shall be adjusted by the addition of the appropriate deterioration factor: *Provided*, That if the deterioration factor as computed in paragraph (d)(3) of this section is less than zero, that deterioration factor shall be zero for the purposes of this paragraph.

(5) The emission level to compare with the standard shall be the adjusted emission level of paragraph (d)(4) of this section. Before any emission value is compared with the standard, it shall be rounded, in accordance with ASTM E 29–67, to two significant figures. The rounded emission values may not exceed the standard.

(6) Every test vehicle of an evaporative emission family must comply with the evaporative emission standard, as determined in paragraph (d)(5) of this section, before any vehicle in that family may be certified.

(e) Unless a manufacturer develops specific cold temperature deterioration factors, 68–86 °F deterioration factors shall be used to determine compliance with cold temperature emission standards.

(Secs. 202, 203, 206, 207, 208, 301a, Clean Air Act, as amended; 42 U.S.C. 7521, 7522, 7525, 7541, 7542, 7601a)

[50 FR 10669, Mar. 15, 1985, as amended at 51 FR 24609, July 7, 1986; 54 FR 14484, Apr. 11, 1989; 57 FR 31897, July 17, 1992; 59 FR 48493, Sept. 21, 1994]

§ 86.091–29 Testing by the Administrator.

(a)(1) Paragraph (a) of this section applies to light-duty vehicles and light-duty trucks.

(2) The Administrator may require that any one or more of the test vehicles be submitted to him, at such place or places as he may designate, for the purposes of conducting emissions tests. The Administrator may specify that he will conduct such testing at the manufacturer's facility, in which case instrumentation and equipment specified by the Administrator shall be made available by the manufacturer for test operations. Any testing conducted at a manufacturer's facility pursuant to this paragraph shall be scheduled by the manufacturer as promptly as possible.

(3)(i) Whenever the Administrator conducts a test segment on a test vehicle, the results of that test segment, unless subsequently invalidated by the Administrator, shall comprise the official data for that test segment for the vehicle at the prescribed test point and the manufacturer's data for that test segment for that prescribed test point shall not be used in determining compliance with emission standards (or family emission limits, as appropriate). The Administrator may stop a test after any evaporative test segment and use as official data any valid results obtained up to that point in the test, as described in subpart B of this part.

(ii) Whenever the Administrator does not conduct a test on a test vehicle at a test point, the manufacturer's test data will be accepted as the official data for that point: *Provided*, That if the Administrator makes a determination based on testing under paragraph (a)(2) of this section, that there is a lack of correlation between the manufacturer's test equipment and the test equipment used by the Administrator, no manufacturer's test data will be accepted for purposes of certification until the reasons for the lack of correlation are determined and the validity of the data is established by the manufacturer, *And further provided*, That if the Administrator has reasonable basis to believe that any test data submitted by the manufacturer is not

accurate or has been obtained in violation of any provisions of this part, the Administrator may refuse to accept that data as the official data pending retesting or submission or further information. If the manufacturer conducts more than one test on a vehicle, as authorized under § 86.084–26 (a)(3)(i)(A) or (b)(4)(i)(A), the data from the last test in that series of tests on that vehicle, will constitute the official data.

(iii)(A)(*1*) The Administrator may adjust or cause to be adjusted any adjustable parameter of an emission-data vehicle or engine which the Administrator has determined to be subject to adjustment for certification and Selective Enforcement Audit testing in accordance with § 86.085–22(e)(1), to any setting within the physically adjustable range of that parameter, as determined by the Administrator in accordance with § 86.085–22(e)(3)(i), prior to the performance of any tests to determine whether such vehicle or engine conforms to applicable emission standards, including tests performed by the manufacturer under § 86.091–23(c)(1). However, if the idle speed parameter is one which the Administrator has determined to be subject to adjustment, the Administrator shall not adjust it to a setting which causes a higher engine idle speed than would have been possible within the physically adjustable range of the idle speed parameter on the engine before it accumulated any dynamometer service, all other parameters being identically adjusted for the purpose of the comparison. The Administrator, in making or specifying such adjustments, will consider the effect of the deviation from the manufacturer's recommended setting on emissions performance characteristics as well as the likelihood that similar settings will occur on in-use light-duty vehicles or light-duty trucks. In determining likelihood, the Administrator will consider factors such as, but not limited to, the effect of the adjustment on vehicle performance characteristics and surveillance information from similar in-use vehicles.

(*2*) For those vehicles or engine parameters which the Administrator has not determined to be subject to adjustment during certification and Selective Enforcement Audit testing in accordance with § 86.085–22(e)(1), the emission-data vehicle presented to the Administrator for testing shall be calibrated within the production tolerances applicable to the manufacturer's specifications to be shown on the vehicle label (see § 86.091–35 (a)(1)(iii)(D) or (a)(2)(iii)(D)) as specified in the application for certification. If the Administrator determines that a vehicle is not within such tolerances, the vehicle will be adjusted, at the facility designated by the Administrator, prior to the test and an engineering report shall be submitted to the Administrator describing the corrective action taken. Based on the engineering report, the Administrator will determine if the vehicle will be used as an emission-data vehicle.

(B) If the Administrator determines that the test data developed on an emission-data vehicle under paragraph (a)(3)(i) of this section would cause that vehicle to fail due to excessive 4,000-mile emissions or by application of the appropriate deterioration factor, then the following procedure shall be observed:

(*1*) The manufacturer may request a retest. Before the retest, those vehicle or engine parameters which the Administrator has not determined to be subject to adjustment for certification and Selective Enforcement Audit testing in accordance with § 86.085–22(e)(1) may be readjusted to manufacturer's specification, if these adjustments were made incorrectly prior to the first test. The Administrator may adjust or cause to be adjusted any parameter which the Administrator has determined to be subject to adjustment to any setting within the physically adjustable range of that parameter, as determined by the Administrator in accordance with § 86.085–22(e)(3)(i). Other maintenance or repairs may be performed in accordance with § 86.088–25. All work on the vehicle shall be done at such location and under such conditions as the Administrator may prescribe.

(*2*) The vehicle will be retested by the Administrator and the results of this test shall comprise the official data for the emission-data vehicle.

(iv) If sufficient durability data are not available at the time of any emission test conducted under paragraph

(a)(2) of this section to enable the Administrator to determine whether an emission-data vehicle would fail, the manufacturer may request a retest in accordance with the provisions of paragraphs (a)(3)(iii) (A) and (B) of this section. If the manufacturer does not promptly make such request, he shall be deemed to have waived the right to a retest. A request for retest must be made before the manufacturer removes the vehicle from the test premises.

(b)(1) Paragraph (b) of this section applies to heavy-duty engines.

(2) The Administrator may require that any one or more of the test engines be submitted to him, at such place or places as he may designate, for the purpose of conducting emissions tests. The Administrator may specify that he will conduct such testing at the manufacturer's facility, in which case instrumentation and equipment specified by the Administrator shall be made available by the manufacturer for test operations. Any testing conducted at a manufacturer's facility pursuant to this paragraph shall be scheduled by the manufacturer as promptly as possible.

(3)(i) Whenever the Administrator conducts a test on a test engine the results of that test, unless subsequently invalidated by the Administrator, shall comprise the official data for the engine at that prescribed test point and the manufacturer's data for that prescribed test point shall not be used in determining compliance with emission standards (or family emission limits, as appropriate).

(ii) Whenever the Administrator does not conduct a test on a test engine at a test point, the manufacturer's test data will be accepted as the official data for that test point: *Provided*, That if the Administrator makes a determination based on testing under paragraph (b)(2) of this section, that there is a lack of correlation between the manufacturer's test equipment and the test equipment used by the Administrator, no manufacturer's test data will be accepted for purposes of certification until the reasons for the lack of correlation are determined and the validity of the data is established by the manufacturer, *And further provided*, That if the Administrator has reasonable basis to believe that any test data submitted by the manufacturer is not accurate or has been obtained in violation of any provision of this part, the Administrator may refuse to accept that data as the official data pending retesting or submission of further information.

(iii)(A)(*1*) The Administrator may adjust or cause to be adjusted any adjustable parameter of an emission-data engine which the Administrator has determined to be subject to adjustment for certification testing in accordance with § 86.085–22(e)(1), to any setting within the physically adjustable range of that parameter, as determined by the Administrator in accordance with § 86.085–22(e)(3)(i), prior to the performance of any tests to determine whether such engine conforms to applicable emission standards, including tests performed by the manufacturer under § 86.088–23(c)(2). The Administrator, in making or specifying such adjustments, may consider the effect of the deviation from the manufacturer's recommended setting on emissions performance characteristics as well as the likelihood that similar settings will occur on in-use heavy-duty engines. In determining likelihood, the Administrator may consider factors such as, but not limited to, the effect of the adjustment on engine performance characteristics and surveillance information from similar in-use engines.

(*2*) For those engine parameters which the Administrator has not determined to be subject to adjustment for certification testing in accordance with § 86.085–22(e)(1), the emission-data engine presented to the Administrator for testing shall be calibrated within the production tolerances applicable to the manufacturer's specifications to be shown on the engine label (see § 86.091–35(a)(3)(iii)) as specified in the application for certification. If the Administrator determines that an engine is not within such tolerances, the engine shall be adjusted at the facility designated by the Administrator prior to the test and an engineering report shall be submitted to the Administrator describing the corrective action taken. Based on the engineering report, the Administrator will determine if the

engine shall be used as an emission-data engine.

(B) If the Administrator determines that the test data developed under paragraph (b)(3)(iii)(A) of this section would cause the emission-data engine to fail due to excessive 125-hour emission values or by the application of the appropriate deterioration factor, then the following procedure shall be observed:

(*1*) The manufacturer may request a retest. Before the retest, those engine parameters which the Administrator has not determined to be subject to adjustment for certification testing in accordance with § 86.085–22(e)(1) may be readjusted to the manufacturer's specifications, if these adjustments were made incorrectly prior to the first test. The Administrator may adjust or cause to be adjusted any parameter which the Administrator has determined to be subject to adjustment in accordance with § 86.085–22(e)(3)(i). However, if the idle speed parameter is one which the Administrator has determined to be subject to adjustment, the Administrator shall not adjust it to a setting which causes a higher engine idle speed than would have been possible within the physically adjustable range of the idle speed parameter on the engine before it accumulated any dynamometer service, all other parameters being identically adjusted for the purpose of the comparison. Other maintenance or repairs may be performed in accordance with § 86.088–25. All work on the vehicle shall be done at such location and under such conditions as the Administrator may prescribe.

(*2*) The engine will be retested by the Administrator and the results of this test shall comprise the official data for the emission-data engine.

(iv) If sufficient durability data are not available at the time of any emission test conducted under paragraph (b)(2) of this section to enable the Administrator to determine whether an emission-data engine would fail, the manufacturer may request a retest in accordance with the provisions of paragraph (b)(3)(iii)(B) (1) and (2) of this section. If the manufacturer does not promptly make such request, he shall be deemed to have waived the right to a retest. A request for retest must be made before the manufacturer removes the engine from the test premises.

(c)(1) Paragraph (c) of this section applies to gasoline-fueled and methanol-fueled heavy-duty vehicles.

(2) The Administrator may require that any one or more of the evaporative emission family-system combinations included in the manufacturer's statement(s) of compliance be installed on an appropriate vehicle and such vehicle be submitted to him, at such place or places as he may designate, for the purpose of conducting emissions tests. The Administrator may specify that he will conduct such testing at the manufacturer's facility, in which case instrumentation and equipment specified by the Administrator shall be made available by the manufacturer for test operations. Any testing conducted at a manufacturer's facility pursuant to this paragraph shall be scheduled by the manufacturer as promptly as possible.

(3)(i) Whenever the Administrator conducts a test segment on an evaporative emission family-system combination, the results of that test segment, unless subsequently invalidated by the Administrator, shall comprise the official data for that test segment for the evaporative emission family-system combination, and the manufacturer's data, analyses, etc., for that test segment shall not be used in determining compliance with emission standards. The Administrator may stop a test after any evaporative test segment and use as official data any valid results obtained up to that point in the test, as described in subpart B of this part.

(ii) Whenever the Administrator does not conduct a test on an evaporative emission family-system combination, the manufacturer's test data will be accepted as the official data: *Provided*, That if the Administrator makes a determination, based on testing under paragraph (c)(2) of this section, that there is a lack of correlation between the manufacturer's test equipment and the test equipment used by the Administrator, no manufacturer's test data will be accepted for purposes of certification until the reasons for the lack of correlation are determined and the validity of the data is established by the

manufacturer, *And further provided*, That if the Administrator has reasonable basis to believe that any test data, analyses, or other information submitted by the manufacturer is not accurate or has been obtained in violation of any provision of this part, the Administrator may refuse to accept those data, analyses, etc., as the official data pending retesting or submission of further information.

(Secs. 202, 203, 206, 207, 208, 301a, Clean Air Act, as amended; 42 U.S.C. 7521, 7522, 7525, 7541, 7542, 7601a)

[50 FR 10675, Mar. 15, 1985, as amended at 54 FR 14488, Apr. 11, 1989; 58 FR 16020, Mar. 24, 1993]

§ 86.091–30 Certification.

(a)(1)(i) If, after a review of the test reports and data submitted by the manufacturer, data derived from any inspection carried out under § 86.091–7(d), and any other pertinent data or information, the Administrator determines that a test vehicle(s) (or test engine(s)) meets(s) the requirements of the Act and of this subpart, he will issue a certificate of conformity with respect to such vehicles(s) (or engines(s)) except in cases covered by paragraphs (a)(1)(ii) and (c) of this section.

(ii) *Gasoline-fueled and methanol-fueled heavy-duty vehicles.* If, after a review of the statement(s) of compliance submitted by the manufacturer under § 86.091–23(b)(4) and any other pertinent data or information, the Administrator determines that the requirements of the Act and this subpart have been met, he will issue one certificate of conformity per manufacturer with respect to the evaporative emission family(s) covered by such statement(s) except in cases covered by paragraph (c) of this section.

(2) Such certificate will be issued for such period not to exceed one model year as the Administrator may determine and upon such terms as he may deem necessary or appropriate to assure that any new motor vehicle (or new motor vehicle engine) covered by the certificate will meet the requirements of the Act and of this part.

(3)(i) One such certificate will be issued for each engine family. For gasoline-fueled and methanol fueled light-duty vehicles and light-duty trucks, one such certificate will be issued for each engine family evaporative emission family combination.

(A) *Light-duty vehicles.* Each certificate will certify compliance with no more than one set of standards (or family emission limits, as appropriate).

(B) *Light-duty trucks.* Each certificate will certify compliance with no more than one set of standards (or family emission limits, as appropriate), except for low-altitude standards and high altitude standards. The certificate shall state that it covers vehicles sold or delivered to an ultimate purchaser for principal use at a designated high-altitude location only if the vehicle conforms in all material respects to the design specifications that apply to those vehicles described in the application for certification at high altitude.

(ii) For gasoline-fueled and methanol fueled heavy-duty vehicles, one such certificate will be issued for each manufacturer and will certify compliance for those vehicles previously identified in that manufacturer's statement(s) of compliance as required in § 86.091–23(b)(4) (i) and (ii).

(iii) For diesel light-duty vehicles and light-duty trucks, or diesel heavy-duty engines, included in the applicable particulate averaging program, the manufacturer may at any time during production elect to change the level of any family particulate emission limit by demonstrating compliance with the new limit as described in §§ 86.091–28(a)(6) and 86.091–28(b)(5)(i). New certificates issued under this paragraph will be applicable only for vehicles (or engines) produced subsequent to the date of issuance.

(iv) For light-duty trucks or heavy-duty engines included in the applicable NO_X averaging program, the manufacturer may at any time during production elect to change the level of any family NO_X emission limit by demonstrating compliance with the new limit as described in § 86.091–28(b)(5)(ii). New certificates issued under this paragraph will be applicable only for vehicles (or engines) produced subsequent to the day of issue.

(4)(i) The adjustment or modification of any light-duty truck in accordance

with instructions provided by the manufacturer for the altitude where the vehicle is principally used will not be considered a violation of section 203(a)(3) of the Clean Air Act.

(ii) A violation of section 203(a)(1) of the Clean Air Act occurs when a manufacturer sells or delivers to an ultimate purchaser any light-duty vehicle or light-duty truck, subject to the regulations under the Act, under any of the conditions specified in the remainder of this paragraph.

(A) When a light-duty vehicle or light-duty truck is not configured to meet high-altitude requirements:

(*1*) At a designated high-altitude location, unless such manufacturer has reason to believe that such vehicle will not be sold to an ultimate purchaser for principal use at a designated high-altitude location; or

(*2*) At a location other than a designated high-altitude location, when such manufacturer has reason to believe that such motor vehicle will be sold to an ultimate purchaser for principal use at a designated high-altitude location.

(B) When a light-duty vehicle is not configured to meet low-altitude requirements, as provided in § 86.087–8(i):

(*1*) At a designated low-altitude location, unless such manufacturer has reason to believe that such vehicle will not be sold to an ultimate purchaser for principal use at a designated low-altitude location; or

(*2*) At a location other than a designated low-altitude location, when such manufacturer has reason to believe that such motor vehicle will be sold to an ultimate purchaser for principal use at a designated low-altitude location.

(iii) A manufacturer shall be deemed to have reason to believe that a light-duty vehicle that has been exempted from compliance with emission standards at high-altitude, or a light-duty truck which is not configured to meet high-altitude requirements, will not be sold to an ultimate purchaser for principal use at a designated high-altitude location if the manufacturer has informed its dealers and field representatives about the terms of these high-altitude regulations, has not caused the improper sale itself, and has taken reasonable action which shall include, but not be limited to, either paragraph (a)(4)(iii) (A) or (B), and (a)(4)(ii)(C) of this section:

(A) Requiring dealers in designated high-altitude locations to submit written statements to the manufacturer signed by the ultimate purchaser that a vehicle which is not configured to meet high-altitude requirements will not be used principally at a designated high-altitude location; requiring dealers in counties contiguous to designated high-altitude locations to submit written statements to the manufacturer, signed by the ultimate purchaser who represents to the dealer in the normal course of business that he or she resides in a designated high-altitude location, that a vehicle which is not configured to meet high-altitude requirements will not be used principally at a designated high-altitude location; and for each sale or delivery of fleets of ten or more such vehicles in a high-altitude location or in counties contiguous to high-altitude locations, requiring either the selling dealer or the delivering dealer to submit written statements to the manufacturer, signed by the ultimate purchaser who represents to the dealer in the normal course of business that he or she resides in a designated high-altitude location, that a vehicle which is not configured to meet high-altitude requirements will not be used principally at a designated high-altitude location. In addition, the manufacturer will make available to EPA, upon reasonable written request (but not more frequently than quarterly, unless EPA has demonstrated that it has substantial reason to believe that an improperly configured vehicle has been sold), sales, warranty, or other information pertaining to sales of vehicles by the dealers described above maintained by the manufacturer in the normal course of business relating to the altitude configuration of vehicles and the locations of ultimate purchasers; or

(B) Implementing a system which monitors factory orders of low-altitude vehicles by high-altitude dealers, or through other means, identifies dealers that may have sold or delivered a vehicle not configured to meet the high-altitude requirements to an ultimate

purchaser for principal use at a designated high-altitude location; and making such information available to EPA upon reasonable written request (but not more frequently than quarterly, unless EPA has demonstrated that it has substantial reason to believe that an improperly configured vehicle has been sold); and

(C) Within a reasonable time after receiving written notice from EPA or a State or local government agency that a dealer may have improperly sold or delivered a vehicle not configured to meet the high-altitude requirements to an ultimate purchaser residing in a designated high-altitude location, or based on information obtained pursuant to paragraph (a)(4)(iii) of this section that a dealer may have improperly sold or delivered a significant number of such vehicles to ultimate purchasers so residing, reminding the dealer in writing of the requirements of these regulations, and, where appropriate, warning the dealer that sale by the dealer of vehicles not configured to meet high-altitude requirements may be contrary to the terms of its franchise agreement with the manufacturer and the dealer certification requirements of § 85.2108 of this chapter.

(iv) A manufacturer shall be deemed to have reason to believe that a light-duty vehicle which has been exempted from compliance with emission standards at low-altitude, as provided in § 86.087–8(i), will not be sold to an ultimate purchaser for principal use at a designated low-altitude location if the manufacturer has informed its dealers and field representatives about the terms of the high-altitude regulations, has not caused the improper sale itself, and has taken reasonable action which shall include, but not be limited to, either paragraph (a)(4)(iv) (A) or (B), and (a)(4)(iv)(C) of this section:

(A) Requiring dealers in designated low-altitude locations to submit written statements to the manufacturer signed by the ultimate purchaser that a vehicle which is not configured to meet low-altitude requirements will not be used principally at a designated low-altitude location; requiring dealers in counties contiguous to designated low-altitude locations to submit written statements to the manufacturer, signed by the ultimate purchaser who represents to the dealer in the normal course of business that he or she resides in a designated low-altitude location, that a vehicle which is not configured to meet low-altitude requirements will not be used principally at a designated low-altitude location; and for each sale or delivery of fleets of ten or more such vehicles in a low-altitude location or in counties contiguous to low-altitude locations, requiring either the selling dealer or the delivering dealer to submit written statements to the manufacturer, signed by the ultimate purchaser who represents to the dealer in the normal course of business that he or she resides in a designated low-altitude location, that a vehicle which is not configured to meet low-altitude requirements will not be used principally at a designated high-altitude location. In addition, the manufacturer will make available to EPA, upon reasonable written request (but not more frequently than quarterly, unless EPA has demonstrated that it has substantial reason to believe that an improperly configured vehicle has been sold), sales, warranty, or other information pertaining to sales of vehicles by the dealers described above maintained by the manufacturer in the normal course of business relating to the altitude configuration of vehicles and the locations of ultimate purchasers; or

(B) Implementing a system which monitors factory orders of high-altitude vehicles by low-altitude dealers, or through other means, identifies dealers that may have sold or delivered a vehicle not configured to meet the low-altitude requirements to an ultimate purchaser for principal use at a designated low-altitude location; and making such information available to EPA upon reasonable written request (but not more frequently than quarterly, unless EPA has demonstrated that it has substantial reason to believe that an improperly configured vehicle has been sold); and

(C) Within a reasonable time after receiving written notice from EPA or a state or local government agency that a dealer may have improperly sold or delivered a vehicle not configured to meet the low-altitude requirements to

an ultimate purchaser residing in a designated low-altitude location, or based on information obtained pursuant to paragraph (a)(4)(iv) of this section that a dealer may have improperly sold or delivered a significant number of such vehicles to ultimate purchasers so residing, reminding the dealer in writing of the requirements of these regulations, and, where appropriate, warning the dealer that sale by the dealer of vehicles not configured to meet low-altitude requirements may be contrary to the terms of its franchise agreement with the manufacturer and the dealer certification requirements of § 85.2108 of this chapter.

(5)(i) For the purpose of paragraph (a) of this section, a ''designated high-altitude location'' is any county which has substantially all of its area located above 1,219 meters (4,000 feet) and:

(A) Requested an extension past the attainment date of December 31, 1982, for compliance with either the National Ambient Air Quality Standards for carbon monoxide or ozone, as indicated in part 52 (Approval and Promulgation of Implementation Plans) of this title; or

(B) Is in the same state as a county designated as a high-altitude location according to paragraph (a)(5)(i)(A) of this section.

(ii) The designated high-altitude locations defined in paragraph (a)(5)(i) of this section are listed below:

STATE OF COLORADO

Adams	Grand
Alamosa	Gunnison
Arapahoe	Hinsdale
Archuleta	Huerfano
Boulder	Jackson
Chaffee	Jefferson
Cheyenne	Kit Carson
Clear Creek	Lake
Conejos	La Plata
Costilla	Larimer
Crowley	Las Animas
Custer	Lincoln
Delta	Mesa
Denver	Mineral
Dolores	Moffat
Douglas	Montezuma
Eagle	Montrose
Elbert	Morgan
El Paso	Otero
Fremont	Ouray
Garfield	Park
Gilpin	Pitkin
Pueblo	San Miguel
Rio Blanco	Summit
Rio Grande	Teller
Routt	Washington
Saguache	Weld
San Juan	

STATE OF NEVADA

Carson City	Lyon
Douglas	Mineral
Elko	Nye
Esmeralda	Pershing
Eureka	Storey
Humboldt	Washoe
Lander	White Pine
Lincoln	

STATE OF NEW MEXICO

Bernalillo	Otero
Catron	Rio Arriba
Colfax	Roosevelt
Curry	Sandoval
De Baca	San Juan
Grant	San Miguel
Guadalupe	Santa Fe
Harding	Sierra
Hidalgo	Socorro
Lincoln	Taos
Los Alamos	Torrance
Luna	Union
McKinley	Valencia
Mora	

STATE OF UTAH

Beaver	Morgan
Box Elder	Piute
Cache	Rich
Carbon	Salt Lake
Daggett	San Juan
Davis	Sanpete
Duchesne	Sevier
Emery	Summit
Garfield	Tooele
Grand	Uintah
Iron	Utah
Juab	Wasatch
Kane	Wayne
Millard	Weber

(iii) For the purpose of paragraph (a) of this section, a ''designated low-altitude location'' is any county which has substantially all of its area located below 1,219 meters (4,000 feet).

(iv) The designated low-altitude locations so defined include all counties in the United States which are not listed in eithir paragraph (a)(5)(ii) of this section or in the list below:

STATE OF ARIZONA

Apache	Navajo
Cochise	Yavapai
Coconino	

STATE OF IDAHO

Bannock	Franklin
Bear Lake	Fremont
Bingham	Jefferson
Blaine	Lemhi
Bonneville	Madison
Butte	Minidoka
Camas	Oneida
Caribou	Power
Cassia	Treton
Clark	Valley
Custer	

STATE OF MONTANA

Beaverhead	Meagher
Deer Lodge	Park
Gallatin	Powell
Jefferson	Silver Bow
Judith Basin	Wheatland
Madison	

STATE OF NEBRASKA

Banner	Kimball
Cheyenne	Sioux

STATE OF OREGON

Harney	Lake
Klamath	

STATE OF TEXAS

Jeff Davis	Parmer
Hudspeth	

STATE OF WYOMING

Albany	Natrona
Campbell	Niobrara
Carbon	Park
Converse	Platte
Fremont	Sublette
Goshen	Sweetwater
Hot Springs	Teton
Johnson	Uinta
Laramie	Washakie
Lincoln	Weston

(6) Catalyst-equipped vehicles, otherwise covered by a certificate, which are driven outside the United States, Canada, and Mexico will be presumed to have been operated on leaded gasoline resulting in deactivation of the catalysts. If these vehicles are imported or offered for importation without retrofit of the catalyst, they will be considered not to be within the coverage of the certificate unless included in a catalyst control program operated by a manufacturer or a United States Government agency and approved by the Administrator.

(7) For incomplete light-duty trucks, a certificate covers only those new motor vehicles which, when completed by having the primary load-carrying device or container attached, conform to the maximum curb weight and frontal area limitations described in the application for certification as required in § 86.091–21(d).

(8) For heavy-duty engines, a certificate covers only those new motor vehicle engines installed in heavy-duty vehicles which conform to the minimum gross vehicle weight rating, curb weight, or frontal area limitations for heavy-duty vehicles described in § 86.082–2.

(9) For incomplete gasoline-fueled and methanol-fueled heavy-duty vehicles a certificate covers only those new motor vehicles which, when completed, conform to the nominal maximum fuel tank capacity limitations as described in the application for certification as required in § 86.091–21(e).

(10)(i) For diesel light-duty vehicle and diesel light-duty truck families which are included in a particulate averaging program, the manufacturer's production-weighted average of the particulate emission limits of all engine families in a participating class or classes shall not exceed the applicable diesel particulate standard, or the composite particulate standard defined in § 86.090–2 as appropriate, at the end of the model year, as determined in accordance with 40 CFR part 86. The certificate shall be void *ab initio* for those vehicles causing the production-weighted FEL to exceed the particulate standard.

(ii) For all heavy-duty diesel engines which are included in the particulate averaging, trading, or banking programs under § 86.091–15:

(A) All certificates issued are conditional upon the manufacturer complying with the provisions of § 86.091–15 and the averaging, trading, and banking related provision of other applicable sections, both during and after the model year production.

(B) Failure to comply with all provisions of § 86.091–15 will be considered to be a failure to satisfy the conditions upon which the certificate was issued, and the certificate may be deemed void *ab initio*.

(C) The manufacturer shall bear the burden of establishing to the satisfaction of the Administrator that the conditions upon which the certificate was issued were satisfied or excused.

(b)(1) The Administrator will determine whether a vehicle (or engine) covered by the application complies with applicable standards (or family emission limits, as appropriate) by observing the following relationships:

(i) *Light-duty vehicles.* (A) The durability data vehicle(s) selected under § 86.090–24(c)(1)(i) shall represent all vehicles of the same engine system combination.

(B) The emission data vehicle(s) selected under § 86.090–24(b)(1) (ii) through (iv) shall represent all vehicles of the same engine-system combination as applicable.

(C) The emission-data vehicle(s) selected under § 86.090–24(b)(l)(vii) (A) and (B) shall represent all vehicles of the same evaporative control system within the evaporative family.

(ii) *Light-duty trucks.* (A) The emission-data vehicle(s) selected under § 86.090–24(b)(1)(ii), shall represent all vehicles of the same engine-system combination as applicable.

(B) The emission-data vehicle(s) selected under § 86.090–24(b)(1)(vii) (A) and (B) shall represent all vehicles of the same evaporative control system within the evaporative family.

(C) The emission-data vehicle(s) selected under § 86.090–24(b)(1)(v) shall represent all vehicles of the same engine-system combination as applicable.

(D) The emission-data vehicle(s) selected under § 86.090–24(b)(1)(viii) shall represent all vehicles of the same evaporative control system within the evaporative emission family, as applicable.

(iii) *Heavy-duty engines.* (A) An Otto-cycle emission-data test engine selected under § 86.090–24(b)(2)(iv) shall represent all engines in the same family of the same engine displacement-exhaust emission control system combination.

(B) An Otto-cycle emission-data test engine selected under § 86.090–24(b)(2)(iii) shall represent all engines in the same engine family of the same engine displacement-exhaust emission control system combination.

(C) A diesel emission data test engine selected under § 86.090–24(b)(3)(ii) shall represent all engines in the same engine-system combination.

(D) A diesel emission-data test engine selected under § 86.090–24(b)(3)(iii) shall represent all engines of that emission control system at the rated fuel delivery of the test engine.

(iv) *Gasoline-fueled and methanol-fueled heavy-duty vehicles.* A statement of compliance submitted under § 86.091–23(b)(4) (i) or (ii) shall represent all vehicles in the same evaporative emission family-evaporative emission control system combination.

(2) The Administrator will proceed as in paragraph (a) of this section with respect to the vehicles (or engines) belonging to an engine family or engine family-evaporative emission family combination (as applicable), all of which comply with all applicable standards (or family emission limits, as appropriate).

(3) If after a review of the test reports and data submitted by the manufacturer, data derived from any additional testing conducted pursuant to § 86.090–29, data or information derived from any inspection carried out under § 86.091–7(d) or any other pertinent data or information, the Administrator determines that one or more test vehicles (or test engines) of the certification test fleet do not meet applicable standards (or family emission limits, as appropriate), he will notify the manufacturer in writing, setting forth the basis for his determination. Within 30 days following receipt of the notification, the manufacturer may request a hearing on the Administrator's determination. The request shall be in writing, signed by an authorized representative of the manufacturer and shall include a statement specifying the manufacturer's objections to the Administrator's determination and data in support of such objections. If, after a review of the request and supporting data, the Administrator finds that the request raises a substantial factual issue, he shall provide the manufacturer a hearing in accordance with § 86.078–6 with respect to such issue.

(4) For light-duty vehicles and light-duty trucks the manufacturer may, at

its option, proceed with any of the following alternatives with respect to an emission-data vehicle determined not in compliance with all applicable standards (or family emission limits, as appropriate) for which it was tested:

(i) Request a hearing under § 86.078–6; or

(ii) Remove the vehicle configuration (or evaporative vehicle configuration, as applicable) which failed, from his application;

(A) If the failed vehicle was tested for compliance with exhaust emission standards (or family emission limits, as appropriate) only: The Administrator may select, in place of the failed vehicle, in accordance with the selection criteria employed in selecting the failed vehicle, a new emission-data vehicle to be tested for exhaust emission compliance only.

(B) If the failed vehicle was tested for compliance with both exhaust and evaporative emission standards: The Administrator may select, in place of the failed vehicle, in accordance with the selection criteria employed in selecting the failed vehicle, a new emission-data vehicle which will be tested for compliance with both exhaust and evaporative emission standards. If one vehicle cannot be selected in accordance with the selection criteria employed in selecting the failed vehicle, then two vehicles may be selected (*i.e.*, one vehicle to satisfy the exhaust emission vehicle selection criteria and one vehicle to satisfy the evaporative emission vehicle selection criteria). The vehicle selected to satisfy the exhaust emission vehicle selection criteria will be tested for compliance with exhaust emission standards (or family emission limits, as appropriate) only. The vehicle selected to satisfy the evaporative emission vehicle selection criteria will be tested for compliance with both exhaust and evaporative emission standards; or

(iii) Remove the vehicle configuration (or evaporative vehicle configuration, as applicable) which failed from the application and add a vehicle configuration(s) (or evaporative vehicle configuration(s), as applicable) not previously listed. The Administrator may require, if applicable, that the failed vehicle be modified to the new engine code (or evaporative emission code, as applicable) and demonstrate by testing that it meets applicable standards (or family emission limits, as appropriate) for which it was originally tested. In addition, the Administrator may select, in accordance with the vehicle selection criteria given in § 86.090–24(b), a new emission-data vehicle or vehicles. The vehicles selected to satisfy the exhaust emission vehicle selection criteria will be tested for compliance with exhaust emission standards (or family emission limits, as appropriate) only. The vehicles selected to satisfy the evaporative emission vehicle selection criteria will be tested for compliance with both exhaust and evaporative emission standards (or family emission limits, as appropriate); or

(iv) Correct a component or system malfunction and show that with a correctly functioning system or component the failed vehicle meets applicable standards (or family emission limits, as appropriate) for which it was originally tested. The Administrator may require a new emission-data vehicle, of identical vehicle configuration (or evaporative vehicle configuration, as applicable) to the failed vehicle, to be operated and tested for compliance with the applicable standards (or family emission limits, as appropriate) for which the failed vehicle was originally tested.

(5) For heavy-duty engines the manufacturer may, at his option, proceed with any of the following alternatives with respect to any engine family represented by a test engine(s) determined not in complinace with applicable standards (or family emission limit, as appropriate):

(i) Request a hearing under § 86.078–6; or

(ii) Delete from the application for certification the engines represented by the failing test engine. (Engines so deleted may be included in a later request for certification under § 86.079–32.) The Administrator may then select in place of each failing engine an alternate engine chosen in accordance with selection criteria employed in selecting the engine that failed; or

(iii) Modify the test engine and demonstrate by testing that it meets applicable standards. Another engine which

is in all material respects the same as the first engine, as modified, may then be operated and tested in accordance with applicable test procedures.

(6) If the manufacturer does not request a hearing or present the required data under paragraphs (b)(4) or (b)(5) of this section (as applicable) of this section, the Administrator will deny certification.

(c)(1) Notwithstanding the fact that any certification vehicle(s) (or certification engine(s)) may comply with other provisions of this subpart, the Administrator may withhold or deny the issuance of a certificate of conformity (or suspend or revoke any such certificate which has been issued) with respect to any such vehicle(s) (or engine(s)) if:

(i) The manufacturer submits false or incomplete information in his application for certification thereof;

(ii) The manufacturer renders inaccurate any test data which he submits pertaining thereto or otherwise circumvents the intent of the Act, or of this part with respect to such vehicle (or engine);

(iii) Any EPA Enforcement Officer is denied access on the terms specified in § 86.091–7(d) to any facility or portion thereof which contains any of the following:

(A) The vehicle (or engine):

(B) Any components used or considered for use in its modification or buildup into a certification vehicle (or certification engine);

(C) Any production vehicle (or production engine) which is or will be claimed by the manufacturer to be covered by the certificate;

(D) Any step in the construction of a vehicle (or engine) described in paragraph (c)(iii)(C) of this section;

(E) Any records, documents, reports, or histories required by this part to be kept concerning any of the above;

(iv) Any EPA Enforcement Officer is denied ''reasonable assistance'' (as defined in § 86.091–7(d) in examining any of the items listed in paragraph (c)(1)(iii) of this section.

(2) The sanctions of withholding, denying, revoking, or suspending of a certificate may be imposed for the reasons in paragraphs (c)(1)(i),(ii),(iii), or (iv) of this section only when the infraction is substantial.

(3) In any case in which a manufacturer knowingly submits false or inaccurate information or knowingly renders inaccurate or invalid any test data or commits any other fraudulent acts and such acts contribute substantially to the Administrator's decision to issue a certificate of conformity, the Administrator may deem such certificate void *ab initio*.

(4) In any case in which certification of a vehicle (or engine) is proposed to be withheld, denied, revoked, or suspended under paragraph (c)(1) (iii) or (iv) of this section, and in which the Administrator has presented to the manufacturer involved reasonable evidence that a violation of § 86.091–7(d) in fact occurred, the manufacturer, if he wishes to contend that, even though the violation occurred, the vehicle (or engine) in question was not involved in the violation to a degree that would warrant withholding, denial, revocation, or suspension of certification under either paragraph (c)(1) (iii) or (iv) of this section, shall have the burden of establishing that contention to the satisfaction of the Administrator.

(5) Any revocation or suspension of certification under paragraph (c)(1) of this section shall:

(i) Be made only after the manufacturer concerned has been offered an opportunity for a hearing conducted in accordance with § 86.078–6 hereof.

(ii) Extend no further than to forbid the introduction into commerce of vehicles (or engines) previously covered by the certification which are still in the hands of the manufacturer, except in cases of such fraud or other misconduct as makes the certification invalid *ab initio*.

(6) The manufacturer may request in the form and manner specified in paragraph (b)(3) of this section that any determination made by the Administrator under paragraph (c)(1) of this section to withhold or deny certification be reviewed in a hearing conducted in accordance with § 86.078–6. If the Administrator finds, after a review of the request and supporting data, that the request raises a substantial factual issue, he will grant the request with respect to such issue.

(d)(1) *For light-duty vehicles.* Notwithstanding the fact that any vehicle configuration or engine family may be covered by a valid outstanding certificate of conformity, the Administrator may suspend such outstanding certificate of conformity in whole or in part with respect to such vehicle configuration or engine family if:

(i) The manufacturer refuses to comply with the provisions of a test order issued by the Administrator pursuant to § 86.603; or

(ii) The manufacturer refuses to comply with any of the requirements of § 86.603; or

(iii) The manufacturer submits false or incomplete information in any report or information provided pursuant to the requirements of § 86.609; or

(iv) The manufacturer renders inaccurate any test data which he submits pursuant to § 86.609; or

(v) Any EPA Enforcement Officer is denied the opportunity to conduct activities related to entry and access as authorized in § 86.606 of this part and in a warrant or court order presented to the manufacturer or the party in charge of a facility in question; or

(vi) EPA Enforcement Officers are unable to conduct activities related to entry and access or to obtain ''reasonable assistance'' as authorized in § 86.606 of this part because a manufacturer has located its facility in a foreign jurisdiction where local law prohibits those activities; or

(vii) The manufacturer refuses to or in fact does not comply with §§ 86.604(a), 86.605, 86.607, 86.608, or 86.610.

(2) The sanction of suspending a certificate may not be imposed for the reasons in paragraph (d)(1)(i), (ii), or (vii) of this section where the refusal is caused by conditions and circumstances outside the control of the manufacturer which render it impossible to comply with those requirements.

(3) The sanction of suspending a certificate may be imposed for the reasons in paragraph (d)(1)(iii), (iv), or (v) of this section only when the infraction is substantial.

(4) In any case in which a manufacturer knowingly submitted false or inaccurate information or knowingly rendered inaccurate any test data or committed any other fraudulent acts, and such acts contributed substantially to the Administrator's original decision not to suspend or revoke a certificate of conformity in whole or in part, the Administrator may deem such certificate void from the date of such fraudulent act.

(5) In any case in which certification of a vehicle is proposed to be suspended under paragraph (d)(1)(v) of this section and in which the Administrator has presented to the manufacturer involved reasonable evidence that a violation of § 86.606 in fact occurred, if the manufacturer wishes to contend that, although the violation occurred, the vehicle configuration or engine family in question was not involved in the violation to a degree that would warrant suspension of certification under paragraph (d)(1)(v) of this section, the manufacturer shall have the burden of establishing the contention to the satisfaction of the Administrator.

(6) Any suspension of certification under paragraph (d)(1) of this section shall:

(i) Be made only after the manufacturer concerned has been offered an opportunity for a hearing conducted in accordance with § 86.614; and

(ii) Not apply to vehicles no longer in the hands of the manufacturer.

(7) Any voiding of a certificate of conformity under paragraph (d)(4) of this section will be made only after the manufacturer concerned has been offered an opportunity for a hearing conducted in accordance with § 86.614.

(e) *For light-duty trucks and heavy-duty engines.* (1) Notwithstanding the fact that any vehicle configuration or engine family may be covered by a valid outstanding certificate of conformity, the Administrator may suspend such outstanding certificate of conformity in whole or in part with respect to such vehicle or engine configuration or engine family if:

(i) The manufacturer refuses to comply with the provisions of a test order issued by the Administrator pursuant to § 86.1003; or

(ii) The manufacturer refuses to comply with any of the requirements of § 86.1003; or

(iii) The manufacturer submits false or incomplete information in any report or information provided pursuant to the requirements of § 86.1009; or

(iv) The manufacturer renders inaccurate any test data submitted pursuant to § 86.1009; or

(v) Any EPA Enforcement Officer is denied the opportunity to conduct activities related to entry and access as authorized in § 86.1006 of this part and in a warrant or court order presented to the manufacturer or the party in charge of a facility in question; or

(vi) EPA Enforcement Officers are unable to conduct activities related to entry and access as authorized in § 86.1006 of this part because a manufacturer has located a facility in a foreign jurisdiction where local law prohibits those activities; or

(vii) The manufacturer refuses to or in fact does not comply with the requirements of §§ 86.1004(a), 86.1005, 86.1007, 86.1008, 86.1010, 86.1011, or 86.1013.

(2) The sanction of suspending a certificate may not be imposed for the reasons in paragraph (e)(1) (i), (ii), or (vii) of this section where such refusal or denial is caused by conditions and circumstances outside the control of the manufacturer which renders it impossible to comply with those requirements. Such conditions and circumstances shall include, but are not limited to, any uncontrollable factors which result in the temporary unavailability of equipment and personnel needed to conduct the required tests, such as equipment breakdown or failure or illness of personnel, but shall not include failure of the manufacturers to adequately plan for and provide the equipment and personnel needed to conduct the tests. The manufacturer will bear the burden of establishing the presence of the conditions and circumstances required by this paragraph.

(3) The sanction of suspending a certificate may be imposed for the reasons outlined in paragraph (e)(1) (iii), (iv), or (v) of this section only when the infraction is substantial.

(4) In any case in which a manufacturer knowingly submitted false or inaccurate information or knowingly rendered inaccurate any test data or committed any other fraudulent acts, and such acts contributed substantially to the Administrator's original decision not to suspend or revoke a certificate of conformity in whole or in part, the Administrator may deem such certificate void from the date of such fraudulent act.

(5) In any case in which certification of a light-duty truck or heavy-duty engine is proposed to be suspended under paragraph (e)(1)(v) of this section and in which the Administrator has presented to the manufacturer involved reasonable evidence that a violation of § 86.1006 in fact occurred, if the manufacturer wishes to contend that, although the violation occurred, the vehicle or engine configuration or engine family in question was not involved in the violation to a degree that would warrant suspension of certification under paragraph (e)(1)(v) of this section, he shall have the burden of establishing that contention to the satisfaction of the Administrator.

(6) Any suspension of certification under paragraph (e)(1) of this section shall:

(i) Be made only after the manufacturer concerned has been offered an opportunity for a hearing conducted in accordance with § 86.1014, and

(ii) Not apply to vehicles or engines no longer in the hands of the manufacturer.

(7) Any voiding of a certificate of conformity under paragraph (e)(4) of this section shall be made only after the manufacturer concerned has been offered an opportunity for a hearing conducted in accordance with § 86.1014.

(Secs. 202, 203, 206, 207, 208, 301a, Clean Air Act, as amended; 42 U.S.C. 7521, 7522, 7525, 7541, 7542, 7601a)

[50 FR 10682, Mar. 15, 1985, as amended at 54 FR 14493, Apr. 11, 1989; 55 FR 30625, July 26, 1990]

§ 86.091–35 Labeling.

(a) The manufacturer of any motor vehicle (or motor vehicle engine) subject to the applicable emission standards (and family emission limits, as appropriate) of this subpart, shall, at the time of manufacture, affix a permanent legible label, of the type and in the manner described below, containing the information hereinafter provided,

to all production models of such vehicles (or engines) available for sale to the public and covered by a certificate of conformity under § 86.091–30(a).

(1) *Light-duty vehicles.* (i) A permanent, legible label shall be affixed in a readily visible position in the engine compartment.

(ii) The label shall be affixed by the vehicle manufacturer who has been issued the certificate of conformity for such vehicle, in such a manner that it cannot be removed without destroying or defacing the label. The label shall not be affixed to any equipment which is easily detached from such vehicle.

(iii) The label shall contain the following information lettered in the English language in block letters and numerals, which shall be of a color that contrasts with the background of the label:

(A) The label heading: Vehicle Emission Control Information;

(B) Full corporate name and trademark of manufacturer;

(C) Engine displacement (in cubic inches), engine family identification and evaporative family identification;

(D) Engine tune-up specifications and adjustments, as recommended by the manufacturer in accordance with the applicable emission standards (or family emission limits, as appropriate), including but not limited to idle speed(s), ignition timing, the idle air-fuel mixture setting procedure and value (*e.g.*, idle CO, idle air-fuel ratio, idle speed drop), high idle speed, initial injection timing, and valve lash (as applicable), as well as other parameters deemed necessary by the manufacturer. These specifications should indicate the proper transmission position during tune-up and what accessories (*e.g.*, air conditioner), if any, should be in operation;

(E) An unconditional statement of compliance with the appropriate model year U.S. Environmental Protection Agency regulations which apply to light-duty vehicles;

(F) For vehicles which are part of the diesel particulate averaging program, the family particulate emission limit to which the vehicle is certified;

(G) For vehicles that have been exempted from compliance with the emission standards at high altitude, as specified in § 86.087–8(h),

(*1*) A highlighted statement (*e.g.*, underscored or boldface letters) that the vehicle is certified to applicable emission standards at low altitude only,

(*2*) A statement that the vehicle's unsatisfactory performance under high-altitude conditions makes it unsuitable for principal use at high altitude, and

(*3*) A statement that the emission performance warranty provisions of 40 CFR part 85, subpart V do not apply when the vehicle is tested at high altitude; and

(H) For vehicles that have been exempted from compliance with the emission standards at low altitude, as specified in § 86.087–8(i),

(*1*) A highlighted statement (*e.g.*, underscored or boldface letters) that the vehicle is certified to applicable emission standards at high altitude only, and

(*2*) A statement that the emission performance warranty provisions of 40 CFR part 85, subpart V do not apply when the vehicle is tested at low altitude.

(2) *Light-duty trucks.* (i) A legible permanent label shall be affixed in a readily visible position in the engine compartment.

(ii) The label shall be affixed by the vehicle manufacturer who has been issued the certificate of conformity for such vehicle, in such a manner that it cannot be removed without destroying or defacing the label. The label shall not be affixed to any equipment which is easily detached from such vehicle.

(iii) The label shall contain the following information lettered in the English language in block letters and numerals, which shall be of a color that contrasts with the background of the label.

(A) The label heading: Important Vehicle Information;

(B) Full corporate name and trademark of manufacturer;

(C) Engine displacement (in cubic inches) and engine family identification;

(D) Engine tune-up specifications and adjustments, as recommended by the manufacturer in accordance with the applicable emission standards (or family emission limits, as appropriate), including but not limited to idle speed(s),

ignition timing, the idle air-fuel mixture setting procedure and value (*e.g.*, idle CO, idle air-fuel ratio, idle speed drop), high idle speed, initial injection timing, and valve lash (as applicable), as well as other parameters deemed necessary by the manufacturer. These specifications should indicate the proper transmission position during tune-up and what accessories (*e.g.*, air conditioner), if any, should be in operation. If adjustments or modifications to the vehicle are necessary to insure compliance with emission standards (or family emission limits, as appropriate) at either high or low altitude, the manufacturer shall either include the instructions for such adjustments on the label, or indicate on the label where instructions for such adjustments may be found. The label shall indicate whether the engine tune-up or adjustment specifications are applicable to high altitude, low altitude or both;

(E) The prominent statement: ''This vehicle conforms to U.S. EPA regulations applicable to 19____ Model Year New Light-Duty Trucks.''

(F) If the manufacturer is provided an alternate useful-life period under the provisions of § 86.088–21(f), the prominent statement: ''This vehicle has been certified to meet U.S. EPA standards for a useful-life period of __ years or __ miles of operation, whichever occurs first. This vehicle's actual life may vary depending on its service application.'' The manufacturer may alter this statement only to express the assigned alternate useful life in terms other than years of miles (*e.g.*, hours, or miles only);

(G) A statement, if applicable, that the adjustments or modifications indicated on the label are necessary to ensure emission control compliance at the altitude specified;

(H) A statement, if applicable, that the high-altitude vehicle was designated or modified for principal use at high altitude. This statement must be affixed by the manufacturer at the time of assembly or by any dealer who performs the high-altitude modification or adjustment prior to sale to an ultimate purchaser;

(I) For vehicles that have been exempted from compliance with the high-altitude emission standards, as specified in § 86.088–9(g)(2),

(*1*) A highlighted statement (*e.g.*, underscored or boldface letters) that the vehicle is certified to applicable emission standards at low altitude only,

(*2*) A statement that the vehicle's unsatisfactory performance under high-altitude conditions makes it unsuitable for principal use at high altitude, and

(*3*) A statement that the emission performance warranty provisions of 40 CFR part 85, subpart I do not apply when the vehicle is tested at high altitude; and,

(J) For vehicles which are included in the diesel particulate averaging program, the family particulate emission limit to which the vehicle is certified.

(K) For vehicles which are included in the light-duty truck NO_X averaging program, the family NO_X emission limit to which the vehicle is certified.

(3) *Heavy-duty engines.* (i) A permanent legible label shall be affixed to the engine in a position in which it will be readily visible after installation in the vehicle.

(ii) The label shall be attached to an engine part necessary for normal engine operation and not normally requiring replacement during engine life.

(iii) The label shall contain the following information lettered in the English language in block letters and numerals which shall be of a color that contrasts with the background of the label:

(A) The label heading: Important Engine Information;

(B) Full corporate name and trademark of manufacturer;

(C) Engine displacement (in cubic inches) and engine family and model designations;

(D) Date of engine manufacture (month and year). The manufacturer may, in lieu of including the date of manufacture on the engine label, maintain a record of the engine manufacture dates. The manufacturer shall provide the date of manufacture records to the Administrator upon request;

(E) Engine specifications and adjustments as recommended by the manufacturer. These specifications should

indicate the proper transmission position during tuneup and what accessories (*e.g.*, air conditioner), if any, should be in operation;

(F) For Otto-cycle engines the label should include the idle speed, ignition timing, and the idle air-fuel mixture setting procedure and value (*e.g.*, idle CO, idle air-fuel ratio, idle speed drop), and valve lash;

(G) For diesel engines the label should include the advertised hp at rpm, fuel rate at advertised hp in mm^3/stroke, valve lash, initial injection timing, and idle speed;

(H) The prominent statement: ''This engine conforms to U.S. EPA regulations applicable to 19____ Model Year New Heavy-Duty Engines.''

(I) If the manufacturer is provided with an alternate useful-life period under the provisions of § 86.088–21(f), the prominent statement: ''This engine has been certified to meet U.S. EPA standards for a useful-life period of __ miles or __ hours of operation, whichever occurs first. This engine's actual life may vary depending on its service application.'' The manufacturer may alter this statement only to express the assigned alternate useful life in terms other than miles or hours (*e.g.*, years, or hours only);

(J) *For diesel engines*. The prominent statement: ''This engine has a primary intended service application as a _____ heavy-duty engine.'' (The primary intended service applications are light, medium, and heavy, as defined in § 86.085–2);

(K) *For Otto-cycle engines*. One of the following statements, as applicable:

(*1*) For engines certified to the emission standards of § 86.091–10(a)(1)(i) or § 86.091–10(a)(1)(iii), the statement: ''This engine is certified for use in all heavy-duty vehicles.''

(*2*) For gasoline-fueled engines certified under the provisions of § 86.091–10(a)(3)(i), the statement: ''This engine is certified for use in all heavy-duty vehicles under the special provision of 40 CFR 86.091–10(a)(3)(i).''

(*3*) For engines certified to the emission standards of § 86.091–10(a)(1)(ii) or § 86.091–10(a)(1)(iv), the statement: ''This engine is certified for use only in heavy-duty vehicles with a gross vehicle weight rating above 14,000 lbs.''

(L) For all heavy-duty engines which are included in the particulate averaging, trading, or banking programs, the particulate family emission limit to which the engine is certified.

(M) For all heavy-duty engines which are included in the NO_X averaging, trading, or banking programs, the NO_X family emission limit to which the engine is certified.

(N) For diesel engines which have been certified to comply with the urban bus particulate standard of 40 CFR 86.091–11(a)(1)(iv), the statement ''This engine is certified for use in an urban bus as defined at 40 CFR 86.091–2.'' Unless waived by the Administrator on the basis of impracticality, for diesel engines not certified to comply with the urban bus particulate standard, the statement ''This engine is not certified for use in an urban bus as defined at 40 CFR 86.091–2. Sales of this engine for use in an urban bus is a violation of Federal law under the Clean Air Act.''

(iv) The label may be made up of one or more pieces: *Provided*, That all pieces are permanently attached to the same engine or vehicle part as applicable.

(4)(i) *Gasoline-fueled and methanol-fueled heavy-duty vehicles*. A permanent, legible label shall be affixed in a readily visible position in the engine compartment. If such vehicles do not have an engine compartment, the label required in paragraphs (a)(4) and (g)(1) of this section shall be affixed in a readily visible position on the operator's enclosure or on the engine.

(ii) The label shall be affixed by the vehicle manufacturer who has been issued the certificate of conformity for such vehicle, in such a manner that it cannot be removed without destroying or defacing the label. The label shall not be affixed to any equipment which is easily detached from such vehicle.

(iii) The lable shall contain the following information lettered in the English language in block letters and numericals, which shall be of a color that contrasts with the background of the label:

(A) The label heading: Vehicle Emission Control Information;

(B) Full corporate name and trademark of manufacturer;

(C) Evaporative family identification;

(D) The maximum nominal fuel tank capacity (in gallons) for which the evaporative control system is certified; and

(E) One of the following, as appropriate:

(*1*) An unconditional statement of compliance with the appropriate model year U.S. Environmental Protection Agency regulations which apply to gasoline-fueled heavy-duty vehicles.

(*2*) An unconditional statement of compliance with the appropriate model year U.S. Environmental Protection Agency regulations which apply to methanol-fueled heavy-duty vehicles.

(b) The provisions of this section shall not prevent a manufacturer from also reciting on the label that such vehicle (or engine) conforms to any applicable state emission standards for new motor vehicles (or new motor vehicle engines) or any other information that such manufacturer deems necessary for, or useful to, the proper operation and satisfactory maintenance of the vehicle (or engine).

(c)(1) The manufacturer of any light-duty vehicle or light-duty truck subject to the emission standards (or family emission limits, as appropriate) of this subpart shall, in addition and subsequent to setting forth those statements on the label required by the Department of Transportation (DOT) pursuant to 49 CFR 567.4, set forth on the DOT label or on an additional label located in proximity to the DOT label and affixed as described in 40 CFR 567.4(b), the following information in the English language, lettered in block letters and numerals not less than three thirty-seconds of an inch high, of a color that contrasts with the background of the label:

(i) The Heading: ''Vehicle Emission Control Information.''

(ii)(A) *For light-duty vehicles*, the statement: ''This Vehicle Conforms to U.S. EPA Regulations Applicable to 19—Model Year New Motor Vehicles.''

(B) *For light-duty trucks.* (*1*) The statement: ''This vehicle conforms to U.S. EPA regulations applicable to 19—Model Year New Light-Duty Trucks.''

(*2*) If the manufacturer is provided an alternate useful-life period under the provisions of § 86.088–21(f), the prominent statement: ''This vehicle has been certified to meet U.S. EPA standards for a useful-life period of __ years or __ miles of operation, whichever occurs first. This vehicle's actual life may vary depending on its service application.'' The manufacturer may alter this statement only to express the assigned alternative useful life in terms other than years or miles (*e.g.*, hours, or miles only).

(iii) One of the following statements, as applicable, in letters and numerals not less than six thirty-seconds of an inch high and of a color that contrasts with the background of the label:

(A) For all vehicles certified as non-catalyst-equipped: ''NON-CATALYST'';

(B) For all vehicles certified as catalyst-equipped which are included in a manufacturer's catalyst control program for which approval has been given by the Administrator: ''CATALYST—APPROVED FOR IMPORT'';

(C) For all vehicles certified as catalyst-equipped which are not included in a manufacturer's catalyst control program for which prior approval has been given by the Administrator: ''CATALYST'';

(2) In lieu in of selecting either of the labeling options of paragraph (c)(1) of this section, the manufacturer may add the information required by paragraph (c)(1)(iii) of this section to the labeling required by paragraph (a) of this section. The required information will be set forth in the manner prescribed by paragraph (c)(1)(iii) of this section.

(d) Incomplete light-duty trucks or incomplete heavy-duty vehicles optionally certified as light-duty trucks shall have the following prominent statement printed on the label required by paragraph (a)(2) of this section in lieu of the statement required by paragraph (a)(2)(iii)(E) of this section: ''This vehicle conforms to U.S. EPA regulations applicable to 19___ Model Year New Light-Duty Trucks when completed at a maximum curb weight of __ pounds or at a maximum gross vehicle weight rating of __ pounds or with a maximum frontal area of __ square feet.''

(e) Incomplete heavy-duty vehicles having a gross vehicle weight rating of 8,500 pounds or less shall have one of the following statements printed on

the label required by paragraph (a)(3) of this section in lieu of the statement required by paragraph (a)(3)(iii)(H) of this section: ''This engine conforms to U.S. EPA regulations applicable to 19___ Model Year New Heavy-Duty Engines when installed in a vehicle completed at a curb weight of more than 6,000 pounds or with a frontal area of greater than 45 square feet.''

(f) The manufacturer of any incomplete light-duty vehicle or light-duty truck shall notify the purchaser of such vehicle of any curb weight, frontal area, or gross vehicle weight rating limitations affecting the emission certificate applicable to that vehicle. This notification shall be transmitted in a manner consistent with National Highway Traffic Safety Administration safety notification requirements published in 49 CFR part 568.

(g)(1)(i) Incomplete gasoline-fueled heavy-duty vehicles shall have the following prominent statement printed on the label required in paragraph (a)(4) of this section: ''(Manufacturer's corporate name) has determined that this vehicle conforms to U.S. EPA regulations applicable to 19___ Model Year New Gasoline-Fueled Heavy-Duty Vehicles when completed with a nominal fuel tank capacity not to exceed ___ gallons. Persons wishing to add fuel tank capacity beyond the above maximum must submit a written statement to the Administrator that the hydrocarbon storage system has been upgraded according to the requirements of 40 CFR 86.091–35(g)(2).''

(ii) Incomplete methanol-fueled heavy-duty vehicles shall have the following prominent statement printed on the label required in paragraph (a)(4) of this section: ''(Manufacturer's corporate name) has determined that this vehicle conforms to U.S. EPA regulations applicable to 19___ Model Year New Methanol-Fueled Heavy-Duty Vehicles when completed with a nominal fuel tank capacity not to exceed ___ gallons. Persons wishing to add fuel tank capacity beyond the above maximum must submit a written statement to the Administrator that the hydrocarbon storage system has been upgraded according to the requirements of 40 CFR 86.091–35(g)(2).''

(2) Persons wishing to add fuel tank capacity beyond the maximum specified on the label required in paragraph (g)(1) of this section shall:

(i) Increase the amount of fuel tank vapor storage material according to the following function:

$$\mathrm{Cap_f} = \mathrm{Cap_i}\left(\frac{\text{T. Vol.}}{\text{Max. Vol.}}\right)$$

Where:

$\mathrm{Cap_f}$ = final amount of fuel tank vapor storage material, grams.

$\mathrm{Cap_i}$ = initial amount of fuel tank vapor storage material, grams.

T. Vol. = total fuel tank volume of completed vehicle, gallons.

Max. Vol. = maximum fuel tank volume as specified on the label required in paragraph (g)(1) of this section, gallons.

(ii) Use, if applicable, hosing for fuel vapor routing which is at least as impermeable to hydrocarbon vapors as that used by the primary manufacturer.

(iii) Use vapor storage material with the same adsorptive characteristics as that used by the primary manufacturer.

(iv) Connect, if applicable, any new hydrocarbon storage device to the existing hydrocarbon storage device in series such that the original hydrocarbon storage device is situated between the fuel tank and the new hydrocarbon storage device. The original hydrocarbon storage device shall be sealed such that vapors cannot reach the atmosphere. The elevation of the original hydrocarbon storage device shall be equal to or lower than the new hydrocarbon storage device.

(v) Submit a written statement to the Administrator that paragraphs (g)(2)(i) through (g)(2)(iv) of this section have been complied with.

(3) If applicable, the Administrator will send a return letter verifying the receipt of the written statement required in paragraph (g)(2)(v) of this section.

(h)(1) Light-duty trucks and heavy-duty engines for which nonconformance penalties are to be paid in accordance with § 86.1113–87(b) shall have the following information printed on the label required in paragraph (a) of this section or on a separate permanent legible label in the English language and

located in proximity to the label required in paragraph (a) of this section. The manufacturer shall begin labeling production engines or vehicles within 10 days after the completion of the PCA.

(i) The statement: ''The manufacturer of this engine/vehicle will pay a penalty to be allowed to introduce it into commerce at an emission level higher than the applicable emission standard. The compliance level (or new emission standard) for this engine/vehicle is _____.'' (The manufacturer shall insert the applicable pollutant and compliance level calculated in accordance with § 86.1112–87(a).)

(ii) [Reserved]

(2) If a manufacturer introduces an engine or vehicle into commerce prior to the compliance level determination of § 86.1112–87(a), it shall provide the engine or vehicle owner with a label as described above to be affixed in a location in proximity to the label required in paragraph (a) of this section within 30 days of the completion of the PCA.

(Secs. 202, 203, 206, 207, 208, 301a, Clean Air Act, as amended; 42 U.S.C. 7521, 7522, 7525, 7541, 7542, 7601a)

[50 FR 10690, Mar. 15, 1985, as amended at 54 FR 14498, Apr. 11, 1989; 55 FR 30626, July 26, 1990; 55 FR 46628, Nov. 5, 1990]

§ 86.092–1 General applicability.

(a) The provisions of this subpart apply to 1992 and later model year new Otto-cycle and diesel light-duty vehicles, 1992 and later model year new Otto-cycle and diesel light-duty trucks, and 1992 and later model year new Otto-cycle and diesel heavy-duty engines. The provisions of this subpart are optional for vehicles fueled with either natural gas or liquefied petroleum gas for the 1994 through 1996 model years. The provisions of this subpart also apply to aftermarket conversions of all model year Otto-cycle and diesel light-duty vehicles, Otto-cycle and diesel light-duty trucks, and Otto-cycle and diesel heavy-duty engines certified under the provisions of 40 CFR part 85, subpart F.

(b) *Optional applicability.* A manufacturer may request to certify any heavy-duty vehicle of 10,000 pounds Gross Vehicle Weight Rating or less in accordance with the light-duty truck provisions. Heavy-duty engine or vehicle provisions do not apply to such a vehicle.

(c) [Reserved]

(d) *Alternative Durability Program.* For 1992 and later model year light-duty vehicles and light-duty trucks, a manufacturer may elect to participate in the Alternative Durability Program. This optional program provides an alternative method of determining exhaust emission control system durability.

The general procedures and a description of the programs are contained in § 86.085–13 and specific provisions on test vehicles and compliance procedures are contained in § 86.092–24 and § 86.091–28 respectively.

(e) *Small volume manufacturers.* Special certification procedures are available for any manufacturer whose projected combined U.S. sales of light-duty vehicles, light-duty trucks, heavy-duty vehicles, and heavy-duty engines in its product line (including all vehicles and engines imported under the provisions of 40 CFR 85.1505 and 40 CFR 85.1509) are fewer than 10,000 units for the model year in which the manufacturer seeks certification. To certify its product line under these optional procedures, the small-volume manufacturer must first obtain the Administrator's approval. The manufacturer must meet the eligibility criteria specified in § 86.092–14(b) before the Administrator's approval will be granted. The small-volume manufacturer's certification procedures are described in § 86.092–14.

(f) *Optional procedures for determining exhaust opacity.* (1) The provisions of subpart I apply to tests which are performed by the Administrator, and optionally, by the manufacturer.

(2) Measurement procedures, other than that described in subpart I, may be used by the manufacturer provided the manufacturer satisfies the requirements of § 86.091–23(f).

(3) When a manufacturer chooses to use an alternative measurement procedure it has the responsibility to determine whether the results obtained by the procedure will correlate with the results which would be obtained from the measurement procedure in subpart I. Consequently, the Administrator will not routinely approve or disapprove

any alternative opacity measurement procedure or any associated correlation data which the manufacturer elects to use to satisfy the data requirements for subpart I.

(4) If a confirmatory test(s) is performed and the results indicate there is a systematic problem suggesting that the data generated under an optional alternative measurement procedure do not adequately correlate with subpart I data, EPA may require that all certificates of conformity not already issued be based on data from subpart I procedures.

[55 FR 7187, Feb. 28, 1990, as amended at 59 FR 48494, Sept. 21, 1994]

§ 86.092–2 Definitions.

The definitions of § 86.091–2 remain effective. The definitions listed in this section apply beginning with the 1992 model year.

(a) *Proven emission control systems* are emission control components or systems (and fuel metering systems) that have completed full durability testing evaluation over a vehicle's useful life in some other certified engine family, or have completed bench or road testing demonstrated to be equal or more severe than certification mileage accumulation requirements. Alternatively, proven components or systems are those that are determined by EPA to be of comparable functional quality and manufactured using comparable materials and production techniques as components or systems which have been durability demonstrated in some other certified engine family. In addition, the components or systems must be employed in an operating environment (e.g., temperature, exhaust flow, etc.,) similar to that experienced by the original or comparable components or systems in the original certified engine family.

(b) *Unproven emission control systems* are emission control components or systems (and fuel metering systems) that do not qualify as proven emission control systems.

(c) *Similar systems* are engine, fuel metering and emission control system combinations which use the same fuel (e.g., gasoline, diesel, etc.), combustion cycle (i.e., two or four stroke), general type of fuel system (i.e., carburetor or fuel injection), catalyst system (e.g., none, oxidization, three-way plus oxidization, three-way only, etc.), fuel control system (i.e., feedback or non-feedback), secondary air system (i.e., equipped or not equipped) and EGR (i.e., equipped or not equipped).

(d) *Conveniently available* service facility and spare parts for small-volume manufacturers means that the vehicle manufacturer has a qualified service facility at or near the authorized point of sale or delivery of its vehicles and maintains an inventory of all emission-related spare parts or has made arrangements for the part manufacturers to supply the parts by expedited shipment (e.g., utilizing overnight express delivery service, UPS, etc.).

[55 FR 7187, Feb. 28, 1990]

§ 86.092–14 Small-volume manufacturers certification procedures.

(a) The small-volume manufacturers certification procedures described in paragraphs (b) and (c) of this section are optional. Small-volume manufacturers may use these optional procedures to demonstrate compliance with the general standards and specific emission requirements contained in this subpart.

(b)(1) The optional small-volume manufacturers certification procedures apply to light-duty vehicles, light-duty trucks, heavy-duty vehicles, and heavy-duty engines produced by manufacturers with U.S. sales, including all vehicles and engines imported under the provisions of 40 CFR 85.1505 and 40 CFR 85.1509 (for the model year in which certification is sought) of fewer than 10,000 units (Light-Duty Vehicles, Light-Duty Trucks, Heavy-Duty Vehicles and Heavy-Duty Engines combined).

(2) For the purpose of determining the applicability of paragraph (b)(1) of this section, the sales the Administrator shall use shall be the aggregate of the projected or actual sales of those vehicles and/or engines in any of the groupings identified below in this subparagraph.

(i) Vehicles and/or engines produced by two or more firms, one of which is 10 percent or greater part owned by another;

(ii) Vehicles and/or engines produced by any two or more firms if a third party has equity ownership of 10 percent or more in each of the firms;

(iii) Vehicles and/or engines produced by two or more firms having a common corporate officer(s) who is(are) responsible for the overall direction of the companies;

(iv) Vehicles and/or engines imported or distributed by all firms where the vehicles and/or engines are manufactured by the same entity and the importer or distributer is an authorized agent of the entity.

(3) If the aggregated sales, as determined in paragraph (b)(2) of this section are less than 301 units, the manufacturers in the aggregated relationship may certify under the provisions in this section that apply to manufacturers with sales of less than 301 units.

(4) If the aggregated sales, as determined in paragraph (b)(2) of this section are greater than 300 but fewer than 10,000 units, the manufacturers in the aggregated relationship may certify under the provisions in this section that apply to manufacturers with sales from and including 301 through 9,999 motor vehicles and motor vehicles engines per year.

(5) If the aggregated sales, as determined in paragraph (b)(2) of this section are equal to or greater than 10,000 units, then the manufacturers involved in the aggregated relationship will be allowed to certify a number of units under the small-volume engine family certification procedures (40 CFR 86.092–24(e)) in accordance with the criteria identified below in this subparagraph.

(i) If a manufacturer purchases less than 50 percent of another manufacturer, each manufacturer retains its right to certify 9,999 units using the small-volume engine family certification procedures.

(ii) If a manufacturer purchases 50 percent or more of another manufacturer, the manufacturer with the over 50 percent interest must share, with the manufacturer it purchased, its 9,999 units under the small-volume engine family certification procedures.

(iii) In a joint venture arrangement (50/50 ownership) between two manufacturers, each manufacturer retains its eligibility for 9,999 units under the small-volume engine family certification procedures, but the joint venture must draw its maximum 9,999 units from the units allocated to its parent manufacturers.

(c) Small-volume manufacturers shall demonstrate compliance with the applicable sections of this subpart. The appropriate model year of the following applicable sections shall be determined in accordance with § 86.084–4:

(1) Sections 86.092–1, 86.092–2, 86.090–3, 86.084–4, 86.090–5, 86.078–6, 86.078–7, and 86.090–8 through 86.090–11 of this subpart are applicable.

(2) Section 86.080–12 of this subpart is not applicable.

(3) Section 86.085–13, 86.092–14, 86.084–15, and 86.085–20 of this subpart are applicable.

(4) Small-volume manufacturers shall include in their records all of the information that EPA requires in §86.090–21 of this subpart. This information will be considered part of the manufacturer's application for certification. However, the manufacturer is not required to submit the information to the Administrator unless the Administrator requests it.

(5) Section 86.085–22 of this subpart is applicable except as noted below.

(i) Small-volume light-duty vehicle and light-duty truck manufacturers may satisfy the requirements of paragraph (e) of § 86.085–22 by including a statement of compliance on adjustable parameters in the application for certification. In the statement of compliance the manufacturer shall state that the limits, stops, seals, or other means used to inhibit adjustment have been designed to accomplish their intended purpose based on good engineering practice and past experience. If the vehicle parameter is adjustable the vehicle must meet emission standards with the parameter set any place within the adjustable range (Reference § 86.090–21 of this subpart).

(6) Section 86.090–23 of this subpart is applicable.

(7) Section 86.092–24 of this subpart is applicable except as noted below.

(i) Small-volume manufacturers may satisfy the requirements of paragraph (b) and (c) of § 86.092–24 of this subpart by:

(A) *Emission-data*—Selecting one emission-data test vehicle (engine) per engine family by the worst-case emissions criteria as follows:

(*1*) *Light-duty vehicles and light-duty trucks.* The manufacturer shall select the vehicle with the heaviest equivalent test weight (including options) within the engine family. Then within that vehicle the manufacturer shall select, in the order listed, the highest road load power, largest displacement, the transmission with the highest numerical final gear ratio (including overdrive), the highest numerical axle ratio offered in the engine family, and the maximum fuel flow calibration.

(*2*) *Heavy-duty Otto-cycle engines.* The manufacturer shall select one emission-data engine first based on the largest displacement within the engine family. Then within the largest displacement the manufacturer shall select, in the order listed, highest fuel flow at the speed of maximum rated torque, the engine with the most advanced spark timing, no EGR or lowest EGR flow, and no air pump or lowest actual flow air pump.

(*3*) *Heavy-duty diesel engines.* The manufacturer shall select one emission-data engine based on the highest fuel feed per stroke, primarily at the speed of maximum rated torque and secondarily at rated speed.

(B) Testing light-duty vehicles or light-duty truck emission-data vehicles at any service accumulation distance of at least 2,000 miles (3,219 kilometers) or, catalyst equipped heavy-duty emission-data engines at any service accumulation time of at least 62 hours, or non-catalyst equipped heavy-duty engine emission-data engines at any service accumulation time determined by the manufacturer to result in stabilized emissions. The emission performance of the emission-data vehicle or engine must be stabilized prior to emission testing.

(C) *Durability data*—Satisfying the durability-data requirements by complying with the applicable procedures below:

(*1*) Manufacturers with aggregated sales of less than 301 motor vehicles and motor vehicle engines per year may use assigned deterioration factors that the Administrator determines and prescribes. The factors will be the Administrator's estimate, periodically updated and published in an advisory letter or advisory circular, of the 70th percentile deterioration factors calculated using the industrywide data base of previously completed durability-data vehicles or engines used for certification. However, the manufacturer may, at its option, accumulate miles (hours) on a durability-data vehicle (engine) and complete emission tests for the purpose of establishing its own deterioration factors.

(*2*) Manufacturers with aggregated sales from and including 301 through 9,999 motor vehicles and motor vehicle engines per year certifying light-duty vehicle exhaust emissions from vehicles equipped with proven emission control systems shall use assigned deterioration factors that the manufacturer determines based on its good engineering judgment. However, the manufacturer may not use deterioration factors less than either the average or 70th percentile of all of that manufacturer's deterioration factor data, whichever is less. These minimum deterioration factors shall be calculated according to procedures in paragraph (c)(7)(i)(C)(*2*)(*i*), of this section. If the manufacturer does not have at least two data points to calculate these manufacturer specific average deterioration factors, then the deterioration factors shall be no less than the EPA supplied industrywide deterioration factors. However, the manufacturer may, at its option, accumulate miles on a durability-data vehicle and complete emission tests for the purpose of establishing its own deterioration factors.

(*i*) The manufacturer's minimum deterioration factors shall be calculated using the deterioration factors from all engine families, within the same vehicle/engine-fuel usage category (e.g., gasoline-fueled light-duty vehicle, etc.) previously certified to the same emission standards. The manufacturer shall use only deterioration factors engine families previously certified by the manufacturer and the deterioration factors shall not be included in the calculation more than once. The deterioration factors for each pollutant shall

be calculated separately. The manufacturer may, at its option, limit the deterioration factors used in the calculation of the manufacturer's minimum deterioration factors to those from all similar systems to the system being certified if sufficient data (i.e., from at least two certified systems) exists. All data eligible to be grouped as similar system data shall be used in calculating similar system deterioration factors. Any deterioration factors used in calculating similar system deterioration factors shall not be included in calculating the manufacturer's minimum deterioration factors used to certify any of the manufacturer's remaining vehicle systems.

(*3*) Manufacturers with aggregated sales from 301 through 9,999 motor vehicles and motor vehicle engines and certifying light-duty vehicle exhaust emissions from vehicles equipped with unproven emission control systems shall use deterioration factors that the manufacturer determines from official certification durability data generated by vehicles from engine families representing a minimum of 25 percent of the manufacturer's sales equipped with unproven emission control systems. The sales projections are to be based on total sales projected for each engine/system combination. The durability-data vehicle (engine) mileage accumulation and emission tests are to be conducted according § 86.092–26 of this subpart. The manufacturer must develop deterioration factors by generating durability data in accordance with § 86.092–26 of this subpart on a minimum of 25 percent of the manufacturer's projected sales (by engine/system combination) that is equipped with unproven emission control systems. The manufacturer must complete the 25 percent durability requirement before the remainder of the manufacturer's sales equipped with unproven emission control systems is certified using manufacturer-determined assigned deterioration factors. Alternatively, any of these manufacturers may, at their option, accumulate miles on durability-data vehicles and complete emission tests for the purpose of establishing their own deterioration factors on the remaining sales.

(*4*) For light-duty vehicle, light-duty truck, and heavy-duty vehicle evaporative emissions and light-duty truck, and heavy-duty engine exhaust emissions, deterioration factors shall be determined in accordance with § 86.092–24 of this subpart.

(ii) Paragraphs (d) and (e) of § 86.092–24 of this subpart are not applicable.

(8) Section 86.090–25 of this subpart is applicable to maintenance performed on durability-data light-duty vehicles, light-duty trucks, heavy-duty vehicles, and heavy-duty engines when the manufacturer completes durability-data vehicles or engines; section 86.087–38 of this subpart is applicable to the recommended maintenance the manufacturer includes in the maintenance instructions furnished the purchasers of new motor vehicles and new motor vehicle engines under § 86.087–38 of this subpart.

(9)(i) Section 86.092–26 of this subpart is applicable if the manufacturer completes durability-data vehicles or engines.

(ii) Section 86.085–27 of this subpart is applicable.

(10) Sections 86.090–28 and 86.090–29 of this subpart are applicable.

(11)(i) Section 86.090–30 of this subpart is applicable, except for paragraph (a)(2) and (b) of that section. In the place of these paragraphs, small-volume manufacturer shall comply with paragraphs (c)(11)(ii) through (v) of this section, as shown below.

(ii) Small-volume manufacturers shall submit an application for certification containing the following:

(A) The names, addresses, and telephone numbers of the persons the manufacturer authorizes to communicate with us.

(B) A brief description of the vehicles (or engines) covered by the certificate (the manufacturers' sales data book or advertising, including specifications, may satisfy this requirement for most manufacturers). The description shall include, as a minimum, the following items as applicable:

(*1*) Engine evaporative family names and vehicle (or engine) configurations.

(*2*) Vehicle carlines or engine models to be listed on the certificate of conformity.

(*3*) The test weight and horsepower setting for each vehicle or engine configuration.

(*4*) Projected sales.

(*5*) Combustion cycle.

(*6*) Cooling mechanism.

(*7*) Number of cylinders.

(*8*) Displacement.

(*9*) Fuel system type.

(*10*) Number of catalytic converters, type, volume, composition, surface area, and total precious metal loading.

(*11*) Method of air aspiration.

(*12*) Thermal reactor characteristics.

(*13*) Suppliers' and/or manufacturers' name and model number of any emission related items of the above, if purchased from a supplier who uses the items in its own certified vehicles(s) or engine(s).

(*14*) A list of emission component part numbers.

(*15*) Drawings, calibration curves, and descriptions of emission related components, including those components regulated under paragraph (e) of § 86.085–22 of this subpart, and schematics of hoses and other devices connecting these components.

(*16*) Vehicle adjustments or modifications necessary for light-duty trucks to assure that they conform to high-altitude standards.

(*17*) A description of the light-duty vehicles and light-duty trucks which are exempted from the high-altitude emission standards.

(*18*) Proof that the manufacturer has obtained or entered an agreement to purchase, when applicable, the insurance policy, required by § 85.1510(b). The manufacturer may submit a copy of the insurance policy or purchase agreement as proof that the manufacturer has obtained or entered an agreement to purchase the insurance policy.

(C) The results of all emission tests the manufacturer performs to demonstrate compliance with the applicable standards.

(D)(*1*) The following statement signed by the authorized representative of the manufacturer: ''The vehicles (or engines) described herein have been tested in accordance with (list of the applicable subparts A, B, D, I, M, N, or P) of part 86, title 40, United States Code of Federal Regulations, and on the basis of those tests are in conformance with that subpart. All of the data and records required by that subpart are on file and are available for inspection by the EPA Administrator. We project the total U.S. sales of vehicles (engines) subject to this subpart (including all vehicles and engines imported under the provisions of 40 CFR 85.1505 and 40 CFR 85.1509 to be fewer than 10,000 units.''

(*2*) A statement as required by and contained in paragraph (c)(5) of this section signed by the authorized representative of the manufacturer.

(*3*) A statement that the vehicles or engines described in the manufacturer's application for certification are not equipped with auxiliary emission control devices which can be classified as a defeat device as defined in § 86.092–2 of this subpart.

(*4*) A statement of compliance with section 206(a)(3) of the Clean Air Act.

(*5*) A statement that, based on the manufacturer's engineering evaluation and/or emission testing, the light-duty vehicles comply with emission standards at high altitude unless exempt under paragraph (h) of § 86.090–8 of this subpart.

(*6*) A statement that, based on the manufacturer's engineering evaluation and/or emission testing, the light-duty trucks sold for principle use at designated high-altitude locations comply with the high-altitude emission requirements and that all other light-duty trucks are at least capable of being modified to meet high-altitude standards unless exempt under paragraph (g)(2) of § 86.090–9 of this subpart.

(*7*) A statement affirming that the manufacturer will provide a list of emission and emission-related service parts, including part number designations and sources of parts, to the vehicle purchaser for all emission and emission-related parts which might affect vehicle emission performance throughout the useful life of the vehicle. Secondly, it must state that qualified service facilities and emission-related repair parts will be conveniently available to serve its vehicles. In addition, if service facilities are not available at the point of sale or distribution, the manufacturer must indicate

that the vehicle purchaser will be provided information identifying the closest authorized service facility to the point of sale, if in the United States, or the closest authorized service facility to the point of distribution to the ultimate purchaser if the vehicle was purchased outside of the United States by the ultimate purchaser. Such information should also be made available to the Administrator upon request.

(E) Manufacturers utilizing deterioration factors determined by the manufacturer based on its good engineering judgment (re: paragraph (c)(7)(i)(C)(*2*) of this section) shall provide a description of the method(s) used by the manufacturer to determine the deterioration factors.

(iii) If the manufacturer meets requirements of this subpart, the Administrator will issue a certificate of conformity for the vehicles or engines described in the application for certification.

(iv) The certificate will be issued for such a period not to exceed one model year as the Administrator may determine and upon such terms as he may deem necessary to assure that any vehicle or engine covered by the certificate will meet the requirements of the Act and of this subpart.

(v)(A) If, after a review of the statements and descriptions submitted by the manufacturer, the Administrator determines that the manufacturer has not met the applicable requirements, the Administrator shall notify the manufacturer in writing of his intention to deny certification, setting forth the basis for his determination. The manufacturer may request a hearing on the Administrator's determination.

(B) If the manufacturer does not request a hearing or present the required information the Administrator will deny certification.

(12) Sections 86.079–31 and 86.079–32 of this subpart are not applicable.

(13) Under § 86.079–33 of this subpart, small-volume manufacturers are covered by the following.

(i) Small-volume manufacturers may make production changes (running changes) without receiving the Administrator's prior approval. The manufacturer shall assure (by conducting emission tests as it deems necessary) that the affected vehicles (engines) remain in compliance with the requirements of this part.

(ii) The manufacturer shall notify the Administrator within seven days after implementing any production related change (running change) that would affect vehicle emissions. This notification shall include any changes to the information required under paragraph (c)(11)(ii) of this section. The manufacturer shall also amend as necessary its records required under paragraph (c)(4) of this section to confirm with the production design change.

(14) Section 86.082–34 of this subpart is not applicable.

(15) Sections 86.092–35, 86.079–36, 86.082–37, 86.087–38 and 86.084–39 of this subpart are applicable.

[55 FR 7187, Feb. 28, 1990]

§ 86.092–15 NO_X and particulate averaging, trading, and banking for heavy-duty engines.

(a)(1) Heavy-duty engines eligible for the NO_X and particulate averaging, trading, and banking programs are described in the applicable emission standards sections in this subpart. Participation in these programs is voluntary.

(2)(i) Engine families with FELs exceeding the applicable standard shall obtain emission credits in a mass amount sufficient to address the shortfall. Credits may be obtained from averaging, trading, or banking, within the averaging set restrictions described in this section.

(ii) Engine families with FELs below the applicable standard will have emission credits available to average, trade, bank or a combination thereof. Credits may not be used to offset emissions that exceed an FEL. Credits may not be used to remedy an in-use nonconformity determined by a Selective Enforcement Audit or by recall testing. However, credits may be used to allow subsequent production of engines for the family in question if the manufacturer elects to recertify to a higher FEL.

(iii) Credits scheduled to expire in the earliest model year shall be used, prior to using other available credits, to offset emissions of engine families

with FELS exceeding the applicable standard.

(b) Participation in the NO_X and/or particulate averaging, trading, and banking programs shall be done as follows. (1) During certification, the manufacturer shall:

(i) Declare its intent to include specific engine families in the averaging, trading and/or banking programs. Separate declarations are required for each program and for each pollutant (i.e., NO_X and particulate).

(ii) Declare an FEL for each engine family participating in one or more of these three programs.

(A) The FEL must be to the same level of significant digits as the emission standard (one-tenth of a gram per brake horsepower for NO_X emissions and one-hundredth of a gram per brake horsepower-hour for particulate emissions).

(B) In no case may the FEL exceed the upper limit prescribed in the section concerning the applicable heavy-duty engine NO_X and particulate emission standards.

(iii) Calculate the projected emission credits (±) based on quarterly production projections for each participating family and for each pollutant (NO_X and particulate), using the equation in paragraph (c) of this section and the applicable factors for the specific engine family.

(iv)(A) Determine and state the source of the needed credits according to quarterly projected production for engine families requiring credits for certification.

(B) State where the quarterly projected credits will be applied for engine families generating credits.

(C) Credits may be obtained from or applied to only engine families within the same averaging set as described in paragraphs (d) and (e) of this section. Credits available for averaging, trading, or banking as defined in § 86.090–2, may be applied to a given engine famil(y) (ies), or reserved as defined in § 86.091–2.

(2) Based on this information each manufacturer's certification application must demonstrate:

(i) That at the end of model year production, each engine family has a net emissions credit balance of zero or more using the methodology in paragraph (c) of this section with any credits obtained from averaging, trading or banking.

(ii) The source of the credits to be used to comply with the emission standard if the FEL exceeds the standard, or where credits will be applied if the FEL is less than the emission standard. In cases where credits are being obtained, each engine family involved must state specifically the source (manufacturer/engine family) of the credits being used. In cases where credits are being generated/supplied, each engine family involved must state specifically the designated use (manufacturer/engine family or reserved) of the credits involved. All such reports shall include all credits involved in averaging, trading or banking.

(3) During the model year manufacturers must:

(i) Monitor projected versus actual production to be certain that compliance with the emission standards is achieved at the end of the model year.

(ii) Provide the end of-model year reports required under § 86.091–23.

(iii) Maintain the quarterly records required under § 86.091–7(c)(8).

(4) Projected credits based on information supplied in the certification application may be used to obtain a certificate of conformity. However, any such credits may be revoked based on review of end-of-model year reports, follow-up audits, and any other verification steps deemed appropriate by the Administrator.

(5) Compliance under averaging, banking, and trading will be determined at the end of the model year. Engine families without an adequate amount of actual NO_X and/or particulate emission credits will violate the conditions of the certificate of conformity. The certificates of conformity may be voided ab initio for those engine families.

(6) If EPA or the manufacturer determines that a reporting error occurred on an end-of-year report previously submitted to EPA under this section, the manufacturer's credits and credit calculations will be recalculated. Erroneous positive credits will be void. Erroneous negative credit balances may be adjusted by EPA.

(i) If EPA review of a manufacturer's end-of-year report indicates an inadvertent credit shortfall, the manufacturer will be permitted to purchase the necessary credits to bring the credit balance for that engine family to zero, at the ratio of 1.2 credits purchased for every credit needed to bring the balance to zero. If sufficient credits are not available to bring the credit balance for the engine family in question to zero, EPA may void the certificate for that engine family ab initio.

(ii) If within 180 days of receipt of the manufacturer's end-of-year report, EPA review determines a reporting error in the manufacturer's favor (i.e., resulting in a positive credit balance) or if the manufacturer discovers such an error within 180 days of EPA receipt of the end-of-year report, the credits will be restored for use by the manufacturer. For the 1992 model year, corrections to the end-of-year reports may be submitted until May 9, 1994.

(c)(1) For each participating engine family, NO_X and particulate emission credits (positive or negative) are to be calculated according to one of the following equations and rounded, in accordance with ASTM E29–67, to the nearest one-tenth of a Megagram (Mg). Consistent units are to be used throughout the equation.

For determining credit need for all engine families and credit availability for engine families generating credits for averaging programs only:

$$\text{Emission credits} = (\text{StdFEL}) \times (\text{CF}) \times (\text{UL}) \times (\text{Production}) \times (106)$$

For determining credit availability for engine families generating credits for trading or banking programs:

$$\text{Emission credits} = (\text{StdFEL}) \times (\text{CF}) \times (\text{UL}) \times (\text{Production}) \times (106) \times (0.8)$$

Where:

Std=the current and applicable heavy-duty engine NO_X or particulate emission standard in grams per brake horsepower hour or grams per Megajoule.

FEL=the NO_X or particulate family emission limit for the engine family in grams per brake horsepower-hour or grams per Megajoule.

CF=a transient cycle conversion factor in BHP-hr/mi or MJ/mi, as given in paragraph (c)(2) of this section.

UL=the useful life, or alternative life as described in paragraph (f) of § 86.090–21, for the given engine family in miles.

Production=the number of engines produced for U.S. sales within the given engine family during the model year. Quarterly production projections are used for initial certification. Actual production is used for end-of-year compliance determination.

0.8=a one-time discount applied to all credits to be banked or traded within the model year generated. Banked credits traded in a subsequent model year will not be subject to an additional discount. Banked credits used in a subsequent model year's averaging program will not have the discount restored.

(2) The transient cycle conversion factor is the total (integrated) cycle brake horsepower-hour or Megajoules, divided by the equivalent mileage of the applicable transient cycle. For Otto-cycle heavy-duty engines, the equivalent mileage is 6.3 miles. For diesel heavy-duty engines, the equivalent mileage is 6.5 miles. When more than one configuration is chosen by EPA to be tested in the certification of an engine family (as described in § 86.085–24), the conversion factor used is to be based upon the configuration generating the highest conversion factor when determining credit need and the lowest conversion factor when determining credit availability for banking, trading or averaging.

(d) Averaging sets for NO_X emission credits: The averaging and trading of NO_X emission credits will only be allowed between heavy-duty engine families in the same averaging set and in the same regional category. Engines produced for sale in California constitute a separate regional category than engines produced for sale in the other 49 states. Banking and trading are not applicable to engines sold in California. The averaging sets for the averaging and trading of NO_X emission credits for heavy-duty engines are defined as follows:

(1) For Otto-cycle heavy-duty engines:

(i) Otto-cycle heavy-duty engines constitute an averaging set. Averaging and trading among all Otto-cycle heavy-duty engine families is allowed. There are no subclass restrictions.

(ii) Gasoline-fueled heavy-duty vehicles certified under the provisions of § 86.085–1(b) may not average or trade

credits with gasoline-fueled heavy-duty Otto-cycle engines, but may average or trade credits with light-duty trucks.

(2) For diesel cycle heavy-duty engines:

(i) Each of the three primary intended service classes for heavy-duty diesel engines, as defined in § 86.090–2, constitute an averaging set. Averaging and trading among all diesel cycle engine families within the same primary service class is allowed.

(ii) Urban buses are treated as members of the primary intended service class where they would otherwise fall.

(e) Averaging sets for particulate emission credits. The averaging and trading of particulate emission credits will only be allowed between diesel cycle heavy-duty engine families in the same averaging set and in the same regional category. Engines produced for sale in California constitute a separate regional category than engines produced for sale in the other 49 states. Banking and trading are not applicable to engines sold in California. The averaging sets for the averaging and trading of particulate emission credits for diesel cycle heavy-duty engines are defined as follows:

(1) Engines intended for use in urban buses constitute a separate averaging set from all other heavy-duty engines. Averaging and trading among all diesel cycle bus engine families is allowed.

(2) For heavy-duty engines, exclusive of urban bus engines, each of the three primary intended service classes for heavy-duty diesel cycle engines, as defined in § 86.090–2, constitute an averaging set. Averaging and trading between diesel cycle engine families within the same primary service class is allowed.

(3) Otto-cycle engines may not participate in particulate averaging, trading, or banking.

(f) Banking of NO_X and particulate emission credits:

(1) *Credit deposits*. (i) Under this phase of the banking program, emission credits may be banked from engine families produced during the three model years prior to the effective model year of the new HDE NO_X or particulate emission standard. Credits may not be banked from engine families made during any other model years.

(ii) Manufacturers may bank credits only after the end of the model year and after EPA has reviewed their end-of-year report. During the model year and before submittal of the end-of-year report, credits originally designated in the certification process for banking will be considered reserved and may be redesignated for trading or averaging.

(2) *Credit withdrawals*. (i) After being generated, banked/reserved credits shall be available for use three model years prior to, through three model years immediately after the effective date of the new HDE NO_X or particulate emission standard, as applicable. However, credits not used within the period specified above shall be forfeited.

(ii) Manufacturers withdrawing banked emission credits shall indicate so during certification and in their credit reports, as described in § 86.091–23.

(3) *Use of banked emission credits*. The use of banked credits shall be within the averaging set and other restrictions described in paragraphs (d) and (e) of this section, and only for the following purposes:

(i) Banked credits may be used in averaging, trading, or in any combination thereof, during the certification period. Credits declared for banking from the previous model year but unreviewed by EPA may also be used. However, they may be revoked at a later time following EPA review of the end-of-year report or any subsequent audit actions.

(ii) Banked credits may not be used for NO_X or particulate averaging and trading to offset emissions that exceed an FEL. Banked credits may not be used to remedy an in-use nonconformity determined by a Selective Enforcement Audit or by recall testing. However, banked credits may be used for subsequent production of the engine family if the manufacturer elects to recertify to a higher FEL.

(g)(1) For purposes of this paragraph (g), assume NO_X and particulate nonconformance penalties (NCPs) will be available for the 1991 and later model year HDEs.

(2) Engine families paying an NCP for noncompliance of any emission standard may not:

(i) Participate in the averaging program,

(ii) Generate emission credits for any pollutant under banking and trading, and

(iii) Use emission credits for any pollutant from banking and trading.

(3) If a manufacturer has any engine family to which application of NCPs and averaging, banking, and trading credits is desired, that family must be separated into two distinct families. One family, whose FEL equals the standard, must use NCPs only, while the other, whose FEL does not equal the standard, must use emission credits only.

(4) If a manufacturer has any engine family in a given averaging set which is using NO_X and/or particulate NCPs, none of that manufacturer's engine families in that averaging set may generate credits for banking and trading.

(h) In the event of a negative credit balance in a trading situation, both the buyer and the seller would be liable.

(i) Certification fuel used for credit generation must be of a type that is both available in use and expected to be used by the engine purchaser. Therefore, upon request by the Administrator, the engine manufacturer must provide information acceptable to the Administrator that the designated fuel is readily available commercially and would be used in customer service.

[59 FR 14106, Mar. 25, 1994]

§ 86.092–23 Required data.

(a) The manufacturer shall perform the tests required by the applicable test procedures, and submit to the Administrator the following information: *Provided, however,* That if requested by the manufacturer, the Administrator may waive any requirement of this section for testing of vehicle (or engine) for which emission data are available or will be made available under the provisions of § 86.091–29.

(b)(1)(i) Exhaust emission durability data on such light-duty vehicles tested in accordance with applicable test procedures and in such numbers as specified, which will show the performance of the systems installed on or incorporated in the vehicle for extended mileage, as well as a record of all pertinent maintenance performed on the test vehicles.

(ii) Exhaust emission deterioration factors for light-duty trucks and heavy-duty engines, and all test data that are derived from the testing described under § 86.091–21(b)(4)(iii)(A), as well as a record of all pertinent maintenance. Such testing shall be designed and conducted in accordance with good engineering practice to assure that the engines covered by a certificate issued under § 86.091–30 will meet the emission standards (or family emission limits, as appropriate) in § 86.091–9, § 86.091–10, or § 86.091–11 as appropriate, in actual use for the useful life of the engine.

(2) For light-duty vehicles and light-duty trucks, evaporative emission deterioration factors for each evaporative emission family-evaporative emission control system combination and all test data that are derived from testing described under § 86.091–21(b)(4)(i) designed and conducted in accordance with good engineering practice to assure that the vehicles covered by a certificate issued under § 86.091–30 will meet the evaporative emission standards in § 86.091–8 or § 86.091–9, as appropriate, for the useful life of the vehicle.

(3) For heavy-duty vehicles equipped with gasoline-fueled or methanol-fueled engines, evaporative emission deterioration factors for each evaporative emission family-evaporative emission control system combination identified in accordance with § 86.091–21(b)(4)(ii). Furthermore, a statement that the test procedure(s) used to derive the deterioration factors includes, but need not be limited to, a consideration of the ambient effects of ozone and temperature fluctuations, and the service accumulation effects of vibration, time, and vapor saturation and purge cycling. The deterioration factor test procedure shall be designed and conducted in accordance with good engineering practice to assure that the vehicles covered by a certificate issued under § 86.091–30 will meet the evaporative emission standards in § 86.091–10 and § 86.091–11 in actual use for the useful life of the engine. Furthermore, a statement that a description of the test procedure, as well as all data, analyses and evaluations, is available to the Administrator upon request.

(4)(i) For heavy-duty vehicles with a Gross Vehicle Weight Rating of up to 26,000 lbs and equipped with gasoline-fueled or methanol-fueled engines, a written statement to the Administrator certifying that the manufacturer's vehicles meet the standards of § 86.091–10 or § 86.091–11 (as applicable) as determined by the provisions of § 86.091–28. Furthermore, a written statement to the Administrator that all data, analyses, test procedures, evaluations, and other documents, on which the above statement is based, are available to the Administrator upon request.

(ii) For heavy-duty vehicles with a Gross Vehicle Weight Rating of greater than 26,000 lbs and equipped with gasoline-fueled or methanol-fueled engines, a written statement to the Administrator certifying that the manufacturer's evaporative emission control systems are designed, using good engineering practice, to meet the standards of § 86.091–10 or § 86.091–11 (as applicable) as determined by the provisions of § 86.091–28. Furthermore, a written statement to the Administrator that all data, analyses, test procedures, evaluations, and other documents, on which the above statement is based, are available to the Administrator upon request.

(c) *Emission data.* (1) Emission data, including in the case of methanol fuel, methanol, formaldehyde and total hydrocarbon equivalent on such vehicles tested in accordance with applicable test procedures and in such numbers as specified. These data shall include zero-mile data, if generated and emission data generated for certification as required under § 86.090–26(a)(3)(i) or § 86.090–26(a)(3)(ii). In lieu of providing emission data on idle CO emissions, smoke emissions or particulate emissions from methanol-fueled diesel certification vehicles the Administrator may, on request of the manufacturer, allow the manufacturer to demonstrate (on the basis of previous emission tests, development tests, or other information) that the engine will conform with the applicable emission standards of § 86.090–8 or § 86.090–9.

(2) *Certification engines.* Emission data on such engines tested in accordance with applicable emission test procedures of this subpart and in such numbers as specified. These data shall include zero-hour data, if generated, and emission data generated for certification as required under § 86.090–26(c)(4). In lieu of providing emission data on idle CO emissions or particulate emissions from methanol-fueled diesel certification engines, or on CO emissions from petroleum-fueled or methanol-fueled diesel certification engines the Administrator may, on request of the manufacturer, allow the manufacturer to demonstrate (on the basis of previous emission tests, development tests, or other information) that the engine will conform with the applicable emission standards of § 86.091–11.

(d) A statement that the vehicles (or engines) for which certification is requested conform to the requirements in § 86.084–5(b), and that the descriptions of tests performed to ascertain compliance with the general standards in § 86.084–5(b), and the data derived from such tests, are available to the Administrator upon request.

(e)(1) A statement that the test vehicles (or test engines) with respect to which data are submitted to demonstrate compliance with the applicable standards (or family emission limits, as appropriate) of this subpart are in all material respects as described in the manufacturer's application for certification, have been tested in accordance with the applicable test procedures utilizing the fuels and equipment described in the application for certification and that on the basis of such tests the vehicles (or engines) conform to the requirements of this part. If such statements cannot be made with respect to any vehicle (or engine) tested, the vehicle (or engine) shall be identified, and all pertinent data relating thereto shall be supplied to the Administrator. If, on the basis of the data supplied and any additional data as required by the Administrator, the Administrator determines that the test vehicles (or test engine) was not as described in the application for certification or was not tested in accordance with the applicable test procedures utilizing the fuels and equipment as described in the application for certification, the Administrator may make

the determination that the vehicle (or engine) does not meet the applicable standards (or family emission limits, as appropriate). The provisions of § 86.091–30(b) shall then be followed.

(2) For evaporative emission durability, or light-duty truck or heavy-duty engine exhaust emission durability, a statement of compliance with paragraph (b)(1)(ii), (b)(2), or (b)(3) of this section, as applicable.

(f) Additionally, manufacturers participating in the particulate averaging program for diesel light-duty vehicles and diesel light-duty trucks shall submit:

(1) In the application for certification, a statement that the vehicles for which certification is requested will not, to the best of the manufacturer's belief, when included in the manufacturer's production-weighted average emission level, cause the applicable particulate standard(s) to be exceeded.

(2) No longer than 90 days after the end of a given model year of production of engine families included in one of the diesel particulate averaging programs, the number of vehicles produced in each engine family at each certified particulate FEL, along with the resulting production-weighted average particulate emission level.

(g) Additionally, manufacturers participating in the NO_X averaging program for light-duty trucks shall submit:

(1) In the application for certification, a statement that the vehicles for which certification is required will not, to the best of the manufacturer's belief, when included in the manufacturer's production-weighted average emission level, cause the applicable NO_X standard(s) to be exceeded.

(2) No longer than 90 days after the end of a given model year of production of engine families included in the NO_X averaging program, the number of vehicles produced in each engine family at each certified NO_X emission level.

(h) Additionally, manufacturers participating in any of the NO_X and/or particulate averaging, trading, or banking programs for heavy-duty engines shall submit for each participating family:

(1) In the application for certification:

(i) A statement that the engines for which certification is requested will not, to the best of the manufacturer's belief, when included in any of the averaging, trading, or banking programs cause the applicable NO_X or particulate standard(s) to be exceeded.

(ii) The type (NO_X or particulate) and the projected number of credits generated/needed for this family, the applicable averaging set, the projected U.S. (49-state) production volumes, by quarter, NCPs in use on a similar family and the values required to calculate credits as given in § 86.091–15. Manufacturers shall also submit how and where credit surpluses are to be dispersed and how and through what means credit deficits are to be met, as explained in § 86.091–15. The application must project that each engine family will be in compliance with the applicable NO_X and/or particulate emission standards based on the engine mass emissions, and credits from averaging, trading and banking.

(2) End-of-year reports for each engine family participating in any of the averaging, trading, or banking programs.

(i) These reports shall be submitted within 90 days of the end of the model year to: Director, Manufacturers Operations Division (EN–6405J), U.S. Environmental Protection Agency, 1200 Pennsylvania Ave., NW., Washington, DC 20460.

(ii) These reports shall indicate the engine family, the averaging set, the actual U.S. (49-state) production volume, the values required to calculate credits as given in § 86.091–15, the resulting type (NO_X or particulate) and number of credits generated/required, and the NCPs in use on a similar NCP family. Manufacturers shall also submit how and where credit surpluses were dispersed (or are to be banked) and how and through what means credit deficits were met. Copies of contracts related to credit trading must also be included or supplied by the broker if applicable. The report shall also include a calculation of credit balances to show that net mass emissions balances are within those allowed by the emission standards (equal to or greater than a zero credit balance). The

credit discount factor described in § 86.091–15 must be included as required.

(iii) The 49-state production counts for end-of-year reports shall be based on the location of the first point of retail sale (e.g., customer, dealer, secondary manufacturer) by the manufacturer.

(iv) Errors discovered by EPA or the manufacturer in the end-of-year report, including changes in the 49 state production counts, may be corrected up to 180 days subsequent to submission of the end-of-year report. Errors discovered by EPA after 180 days shall be corrected if credits are reduced. Errors in the manufacturer's favor will not be corrected if discovered after the 180 day correction period allowed.

(i) Failure by a manufacturer participating in the averaging, trading, or banking programs to submit any quarterly or end-of-year report (as applicable) in the specified time for all vehicles and engines that are part of an averaging set is a violation of section 203(a)(1) of the Clean Air Act for each such vehicle and engine.

(j) Failure by a manufacturer generating credits for deposit only in either the HDE NO_X or particulate banking programs to submit their end-of-year reports in the applicable specified time period (i.e., 90 days after the end of the model year) shall result in the credits not being available for use until such reports are received and reviewed by EPA. Use of projected credits pending EPA review will not be permitted in these circumstances.

(k) Engine families certified using NCPs are not required to meet the requirements outlined above.

[59 FR 14108, Mar. 25, 1994]

§ 86.092–24 Test vehicles and engines.

(a)(1) The vehicles or engines covered by an application for certification will be divided into groupings of engines which are expected to have similar emission characteristics throughout their useful life. Each group of engines with similar emission characteristics shall be defined as a separate engine family.

(2) To be classed in the same engine family, engines must be identical in all the following respects:

(i) The cylinder bore center-to-center dimensions.

(ii)–(iii) [Reserved]

(iv) The cylinder block configuration (air cooled or water cooled; L–6, 90° V–8, etc.).

(v) The location of the intake and exhaust valves (or ports).

(vi) The method of air aspiration.

(vii) The combustion cycle.

(viii) Catalytic converter characteristics.

(ix) Thermal reactor characteristics.

(x) Type of air inlet cooler (e.g., intercoolers and after-coolers) for diesel heavy-duty engines.

(3)(i) Engines identical in all the respects listed in paragraph (a)(2) of this section may be further divided into different engine families if the Administrator determines that they may be expected to have different emission characteristics. This determination will be based upon a consideration of the following features of each engine:

(A) The bore and stroke.

(B) The surface-to-volume ratio of the nominally dimensioned cylinder at the top dead center positions.

(C) The intake manifold induction port size and configuration.

(D) The exhaust manifold port size and configuration.

(E) The intake and exhaust valve sizes.

(F) The fuel system.

(G) The camshaft timing and ignition or injection timing characteristics.

(ii) Light-duty trucks and heavy-duty engines produced in different model years and distinguishable in the respects listed in paragraph (a)(2) of this section shall be treated as belonging to a single engine family if the Administrator requires it, after determining that the engines may be expected to have similar emission deterioration characteristics.

(4) Where engines are of a type which cannot be divided into engine families based upon the criteria listed in paragraphs (a)(2) and (a)(3) of this section, the Administrator will establish families for those engines based upon those features most related to their emission characteristics. Engines that are eligible to be included in the same engine family based on the criteria in paragraphs (a)(2) and (a)(3)(i) of this section

may be further divided into different engine families if the manufacturer determines that they may be expected to have different emission characteristics. This determination will be based upon a consideration of the following features of each engine:

(i) The dimension from the center line of the crankshaft to the center line of the camshaft.

(ii) The dimension from the center line of the crankshaft to the top of the cylinder block head face.

(iii) The size of the intake and exhaust valves (or ports).

(5) The gasoline-fueled and methanol-fueled light-duty vehicles and light-duty trucks covered by an application for certification will be divided into groupings which are expected to have similar evaporative emission characteristics throughout their useful life. Each group of vehicles with similar evaporative emission characteristics shall be defined as a separate evaporative emission family.

(6) For gasoline-fueled or methanol-fueled light-duty vehicles and light-duty trucks to be classed in the same evaporative emission family, vehicles must be similar with respect to:

(i) Type of vapor storage device (e.g., canister, air cleaner, crankcase).

(ii) Basic canister design.

(iii) Fuel system.

(7) Where vehicles are of a type which cannot be divided into evaporative emission families based on the criteria listed above, the Administrator will establish families for those vehicles based upon the features most related to their evaporative emission characteristics.

(8)(i) If the manufacturer elects to participate in the Alternative Durability Program, the engine families covered by an application for certification shall be grouped based upon similar engine design and emission control system characteristics. Each of these groups shall constitute a separate engine family group.

(ii) To be classed in the same engine family group, engine families must contain engines identical in all of the following respects:

(A) The combustion cycle.

(B) The cylinder block configuration (air-cooled or water-cooled; L–6, V–8, rotary, etc.).

(C) Displacement (engines of different displacement within 50 cubic inches or 15 percent of the largest displacement and contained within a multi-displacement engine family will be included in the same engine family group).

(D) Catalytic converter usage and basic type (non-catalyst, oxidation catalyst only, three-way catalyst equipped).

(9) Engine families identical in all respects listed in paragraph (a)(8) of this section may be further divided into different engine family groups if the Administrator determines that they are expected to have significantly different exhaust emission control system deterioration characteristics.

(10) A manufacturer may request the Administrator to include in an engine family group, engine families in addition to those grouped under the provisions of paragraph (a)(8) of this section. This request must be accompanied by information the manufacturer believes supports the inclusion of these additional engine families.

(11) A manufacturer may combine into a single engine family group those light-duty vehicle and light-duty truck engine families which otherwise meet the requirements of paragraphs (a)(8) through (a)(10) of this section.

(12) The vehicles covered by an application for certification equipped with gasoline-fueled and methanol-fueled heavy-duty engines will be divided into groupings of vehicles on the basis of physical features which are expected to affect evaporative emissions. Each group of vehicles with similar features shall be defined as a separate evaporative emission family.

(13) For gasoline-fueled or methanol-fueled heavy-duty vehicles to be classified in the same evaporative emission family, vehicles must be identical with respect to:

(i) Method of fuel/air metering (i.e., carburetion versus fuel injection).

(ii) Carburetor bowl fuel volume, within a 10 cc range.

(14) For vehicles equipped with gasoline-fueled and methanol-fueled heavy-duty engines to be classified in the

same evaporative emission control system, vehicles must be identical with respect to:

(i) Method of vapor storage.

(ii) Method of carburetor sealing.

(iii) Method of air cleaner sealing.

(iv) Vapor storage working capacity, within a 20g range.

(v) Number of storage devices.

(vi) Method of purging stored vapors.

(vii) Method of venting the carburetor during both engine off and engine operation.

(viii) Liquid fuel hose material.

(ix) Vapor storage material.

(15) Where vehicles equipped with gasoline-fueled or methanol-fueled heavy-duty engines are types which cannot be divided into evaporative emission family-control system combinations based on the criteria listed above, the Administrator will establish evaporative emission family-control system combinations for those vehicles based on features most related to their evaporative emission characteristics.

(16) No 1992 or later model year heavy-duty engine which is to be used to generate emission credits for 1992 and later banking, trading and averaging programs may also utilize nonconformance penalties (NCPs). Use of an NCP thus becomes an engine family criterion.

(i) Use of either a NO_X or a particulate matter NCP by an engine family precludes that family from generating either NO_X or particulate matter emission credits.

(ii) If a manufacturer desires to use both banked credits and NCPs on an engine family, two separate engine families must be established. One engine family must consist of engines certified for only credit use following the procedure specified in this subpart. The other engine family must be certified for only NCP use following the procedure as specified in 40 CFR part 86, subpart L.

(b) *Emission data*—(1) *Emission-data vehicles*. Paragraph (b)(1) of this section applies to light-duty vehicle and light-duty truck emission-data vehicles.

(i) Vehicles will be chosen to be operated and tested for emission data based upon engine family groupings. Within each engine family, one test vehicle will be selected based on the following criteria: The Administrator shall select the vehicle with the heaviest equivalent test weight (including options) within the family. Then within that vehicle the Administrator shall select, in the order listed, the highest road-load power, largest displacement, the transmission with the highest numerical final gear ratio (including overdrive), the highest numerical axle ratio offered in that engine family, and the maximum fuel flow calibration.

(ii) The Administrator shall select one additional test vehicle from within each engine family. The vehicle selected shall be the vehicle expected to exhibit the highest emissions of those vehicles remaining in the engine family. If all vehicles within the engine family are similar the Administrator may waive the requirements of this paragraph.

(iii) Within an engine family and exhaust emission control system, the manufacturer may alter any emission-data vehicle (or other vehicles such as including current or previous model year emission-data vehicles, fuel economy data vehicles, and development vehicles provided they meet emission-data vehicles' protocol) to represent more than one selection under paragraph (b)(1) (i), (ii), (iv), or (vii) of this section.

(iv) If the vehicles selected in accordance with paragraphs (b)(1) (i) and (ii) of this section do not represent each engine-system combination, then one vehicle of each engine-system combination not represented will be selected by the Administrator. The vehicle selected shall be the vehicle expected to exhibit the highest emissions of those vehicles remaining in the engine family.

(v) For high-altitude exhaust emission compliance for each engine family, the manufacturer shall follow one of the following procedures:

(A) The manufacturer will select for testing under high-altitude conditions the vehicle expected to exhibit the highest emissions from the nonexempt vehicles selected in accordance with paragraphs (b)(1) (ii), (iii), and (iv) of this section or,

(B) In lieu of testing vehicles according to paragraph (b)(1)(v)(A) of this section, a manufacturer may provide a

statement in its application for certification that, based on the manufacturer's engineering evaluation of such high-altitude emission testing as the manufacturer deems appropriate,

(*1*) That all light-duty vehicles not exempt under § 86.090–8(h) comply with the emission standards at high altitude; and

(*2*) That light-duty trucks sold for principal use at designated high-altitude locations comply with the high-altitude emission requirements and that all light-duty trucks sold at low altitude, which are not exempt under § 86.091–9(g)(2), are capable of being modified to meet high-altitude standards.

(vi) If 90 percent or more of the engine family sales will be in California, a manufacturer may substitute emission-data vehicles selected by the California Air Resources Board criteria for the selections specified in paragraphs (b)(1) (i), (ii), and (iv) of this section.

(vii)(A) Vehicles of each evaporative emission family will be divided into evaporative emission control systems.

(B) The Administrator will select the vehicle expected to exhibit the highest evaporative emissions, from within each evaporative family to be certified, from among the vehicles represented by the exhaust emission-data selections for the engine family, unless evaporative testing has already been completed on the vehicle expected to exhibit the highest evaporative emissions for the evaporative family as part of another engine family's testing.

(C) If the vehicles selected in accordance with paragraph (b)(1)(vii)(B) of this section do not represent each evaporative emission control system then the Administrator will select the highest expected evaporative emission vehicle from within the unrepresented evaporative system.

(viii) For high-altitude evaporative emission compliance for each evaporative emission family, the manufacturer shall follow one of the following procedures:

(A) The manufacturer will select for testing under high-altitude conditions the one nonexempt vehicle previously selected under paragraphs (b)(1)(vii) (B) or (C) of this section which is expected to have the highest level of evaporative emissions when operated at high altitude or

(B) In lieu of testing vehicles according to paragraph (b)(1)(viii)(A) of this section, a manufacturer may provide a statement in its application for certification that based on the manufacturer's engineering evaluation of such high-altitude emission testing as the manufacturer deems appropriate,

(*1*) That all light-duty vehicles not exempt under § 86.090–8(h) comply with the emission standards at high altitude, and

(*2*) That light-duty trucks sold for principal use at designated high-altitude locations comply with the high-altitude emission requirements and that all light-duty trucks sold at low-altitude, which are not exempt under § 86.091–9(g)(2), are capable of being modified to meet high-altitude standards.

(ix) Vehicles selected under paragraph (b)(1)(v)(A) of this section may be used to satisfy the requirements of (b)(1)(viii)(A) of this section.

(x) *Light-duty trucks only:* (A) The manufacturer may reconfigure any of the low-altitude emission-data vehicles to represent the vehicle configuration required to be tested at high altitude.

(B) The manufacturer is not required to test the reconfigured vehicle at low altitude.

(2) *Otto-cycle heavy-duty emission-data engines.* Paragraph (b)(2) of this section applies to Otto-cycle heavy-duty engines.

(i)–(ii) [Reserved]

(iii) The Administrator shall select a maximum of two engines within each engine family based upon features indicating that they may have the highest emission levels of the engines in the engine family as follows:

(A) The Administrator shall select one emission-data engine first based on the largest displacement within the engine family. Then within the largest displacement the Administrator shall select, in the order listed, highest fuel flow at the speed of maximum rated torque, the engine with the most advanced spark timing, no EGR or lowest EGR flow, and no air pump or lowest actual flow air pump.

(B) The Administrator shall select one additional engine, from within

each engine family. The engine selected shall be the engine expected to exhibit the highest emissions of those engines remaining in the engine family. If all engines within the engine family are similar the Administrator may waive the requirements of this paragraph.

(iv) If the engines selected in accordance with paragraph (b)(2) (ii) and (iii) of this section do not represent each engine displacement-exhaust emission control system combination, then one engine of each engine displacement-exhaust emission control system combination not represented shall be selected by the Administrator.

(v) Within an engine family/displacement/control system combination, the manufacturer may alter any emission-data engine (or other engine including current or previous model year emission-data engines and development engines provided they meet the emission-data engines' protocol) to represent more than one selection under paragraph (b)(2)(iii) of this section.

(3) *Diesel heavy-duty emission-data engines.* Paragraph (b)(3) of this section applies to diesel heavy-duty emission-data vehicles.

(i) Engines will be chosen to be run for emission data based upon engine family groupings. Within each engine family, the requirements of this paragraph must be met.

(ii) Engines of each engine family will be divided into groups based upon their exhaust emission control systems. One engine of each system combination shall be run for smoke emission data and gaseous emission data. Either the complete gaseous emission test or the complete smoke test may be conducted first. Within each combination, the engine that features the highest fuel feed per stroke, primarily at the speed of maximum rated torque and secondarily at rated speed, will usually be selected. If there are military engines with higher fuel rates than other engines in the same engine system combinations, then one military engine shall also be selected. The engine with the highest fuel feed per stroke will usually be selected.

(iii) The Administrator may select a maximum of one additional engine within each engine-system combination based upon features indicating that it may have the highest emission levels of the engines of that combination. In selecting this engine, the Administrator will consider such features as the injection system, fuel system, compression ratio, rated speed, rated horsepower, peak torque speed, and peak torque.

(iv) Within an engine family control system combination, the manufacturer may alter any emission-data engine (or other engine including current or previous model year emission-data engines and development engines provided they meet the emission-data engines' protocol) to represent more than one selection under paragraph (b)(3)(ii) and (iii) of this section.

(c) *Durability data*—(1) *Light-duty vehicle durability-data vehicles.* Paragraph (c)(1) of this section applies to light-duty vehicle durability-data vehicles.

(i) A durability-data vehicle will be selected by the Administrator to represent each engine-system combination. The vehicle selected shall be of the engine displacement with the largest projected sales volume of vehicles with that control-system combination in that engine family and will be designated by the Administration as to transmission type, fuel system, inertia weight class, and test weight.

(ii) A manufacturer may elect to operate and test additional vehicles to represent any engine-system combination. The additional vehicles must be of the same engine displacement, transmission type, fuel system and inertia weight class as the vehicle selected for that engine-system combination in accordance with the provisions of paragraph (c)(1)(i) of this section. Notice of an intent to operate and test additional vehicles shall be given to the Administrator no later than 30 days following notification of the test fleet selection.

(2) *Light-duty trucks.* Paragraph (c)(2) of this section applies to vehicles, engines, subsystems, or components used to establish exhaust emission deterioration factors for light-duty trucks.

(i) The manufacturer shall select the vehicles, engines, subsystems, or components to be used to determine exhaust emission deterioration factors for each engine-family control system

combination. Whether vehicles, engines, subsystems, or components are used, they shall be selected so that their emissions deterioration characteristics may be expected to represent those of in-use vehicles, based on good engineering judgment.

(ii) [Reserved]

(3) *Heavy-duty engines.* Paragraph (c)(3) of this section applies to engines, subsystems, or components used to establish exhaust emission deterioration factors for heavy-duty engines.

(i) The manufacturer shall select the engines, subsystems, or components to be used to determine exhaust emission deterioration factors for each engine-family control system combination. Whether engines, subsystems, or components are used, they shall be selected so that their emissions deterioration characteristics may be expected to represent those of in-use engines, based on good engineering judgment.

(ii) [Reserved]

(d) For purposes of testing under § 86.092–26 (a)(9) or (b)(11), the Administrator may require additional emission-data vehicles (or emission-data engines) and durability-data vehicles (light-duty vehicles only) identical in all material respects to vehicles (or engines) selected in accordance with paragraphs (b) and (c) of this section, *Provided* That the number of vehicles (or engines) selected shall not increase the size of either the emission-data fleet or the durability-data fleet by more than 20 percent or one vehicle (or engine), whichever is greater.

(e)(1) [Reserved]

(2) Any manufacturer may request to certify engine families with combined total sales of fewer than 10,000 light-duty vehicles, light-duty trucks, heavy-duty vehicles, and heavy-duty engines utilizing the procedures contained in § 86.092–14 of this subpart for emission-data vehicle selection and determination of deterioration factors. The deterioration factors shall be applied only to entire engine families.

(f) In lieu of testing an emission-data or durability-data vehicle (or engine) selected under paragraph (b) or (c) of this section, and submitting data therefore, a manufacturer may, with the prior written approval of the Administrator, submit exhaust emission data and/or fuel evaporative emission data, as applicable on a similar vehicle (or engine) for which certification has previously been obtained or for which all applicable data required under § 86.091–23 has previously been submitted.

(g)(1) This paragraph applies to light-duty vehicles and light-duty trucks, but does not apply to the production vehicles selected under paragraph (h) of this section.

(2)(i) Where it is expected that more than 33 percent of a carline, within an engine-system combination, may be equipped with an item (whether that item is standard equipment or an option), the full estimated weight of that item shall be included in the curb weight computation of each vehicle available with that item in that carline, within that engine-system combination.

(ii) Where it is expected that 33 percent or less of the carline, within an engine-system combination, will be equipped with an item (whether that item is standard equipment or an option), no weight for that item will be added in computing the curb weight for any vehicle in that carline, within that engine-system combination, unless that item is standard equipment on the vehicle.

(iii) In the case of mutually exclusive options, only the weight of the heavier option will be added in computing the curb weight.

(iv) Optional equipment weighing less than three pounds per item need not be considered.

(3)(i) Where it is expected that more than 33 percent of a carline, within an engine-system combination, will be equipped with an item (whether that item is standard equipment or an option) that can reasonably be expected to influence emissions, then such items shall actually be installed (unless excluded under paragraph (g)(3)(ii) of this section) on all emission-data and durability-data vehicles of that carline, within that engine-system combination, on which the items are intended to be offered in production. Items that can reasonably be expected to influence emissions are: air conditioning, power steering, power brakes, and

other items determined by the Administrator.

(ii) If the manufacturer determines by test data or engineering evaluation that the actual installation of the optional equipment required by paragraph (g)(3)(i) of this section does not affect the emissions or fuel economy values, the optional equipment need not be installed on the test vehicle.

(iii) The weight of the options shall be included in the design curb weight and also be represented in the weight of the test vehicles.

(iv) The engineering evaluation, including any test data, used to support the deletion of optional equipment from test vehicles, shall be maintained by the manufacturer and shall be made available to the Administrator upon request.

(4) Where it is expected that 33 percent or less of a carline within an engine-system combination will be equipped with an item (whether that item is standard equipment or an option) that can reasonably be expected to influence emissions, that item shall not be installed on any emission-data vehicle or durability-data vehicle of that carline, within that engine-system combination, unless that item is standard equipment on that vehicle or specifically required by the Administrator.

(h) *Alternative Durability Program durability-data vehicles.* This section applies to light-duty vehicle and light-duty truck durability-data vehicles selected under the Alternative Durability Program described in § 86.085–13.

(1) To update the durability data to be used to determine a deterioration factor for each engine family group, the Administrator will select durability-data vehicles from the manufacturer's production line. Production vehicles will be selected from each model year's production for those vehicles certified using the Alternative Durability Program procedures.

(i) The Administrator shall select the production durability-data vehicle designs from the designs that the manufacturer offers for sale. For each model year and for each engine family group, the Administrator may select production durability-data vehicle designs of equal number to the number of engine families within the engine family group, up to a maximum of three vehicles.

(ii) The production durability-data vehicles representing the designs selected in paragraph (h)(1)(i) of this section will be randomly selected from the manufacturer's production. The Administrator will make these random selections unless the manufacturer (with prior approval of the Administrator) elects to make the random selections.

(iii) The manufacturer may select additional production durability-data vehicle designs from within the engine family group. The production durability-data vehicles representing these designs shall be randomly selected from the manufacturer's production in accordance with paragraph (h)(1)(ii) of this section.

(iv) For each production durability-data vehicle selected under paragraph (h)(1) of this section, the manufacturer shall provide to the Administrator (before the vehicle is tested or begins service accumulation) the vehicle identification number. Before the vehicle begins service accumulation the manufacturer shall also provide the Administrator with a description of the durability-data vehicle as specified by the Administrator.

(v) In lieu of testing a production durability-data vehicle selected under paragraph (h)(1) of this section, and submitting data therefrom, a manufacturer may, with the prior written approval of the Administrator, submit exhaust emission data from a production vehicle of the same configuration for which all applicable data has previously been submitted.

(2) If, within an existing engine family group, a manufacturer requests to certify vehicles of a new design, engine family, emission control system, or with any other durability-related design difference, the Administrator will determine if the existing engine family group deterioration factor is appropriate for the new design. If the Administrator cannot make this determination or deems the deterioration factor not appropriate, the Administrator shall select preproduction durability-data vehicles under the provisions of

paragraph (c) of this section. If vehicles are then certified using the new design, the Administrator may select production vehicles with the new design under the provisions of paragraph (h)(1) of this section.

(3) If a manufacturer requests to certify vehicles of a new design that the Administrator determines are a new engine family group, the Administrator shall select preproduction durability-data vehicles under the provisions of paragraph (c) of this section. If vehicles are then certified using the new design, the Administrator may select production vehicles of that design under the provisions of paragraph (h)(1) of this section.

[55 FR 7190, Feb. 28, 1990, as amended at 55 FR 30626, July 26, 1990]

§ 86.092–26 Mileage and service accumulation; emission measurements.

(a)(1) Paragraph (a) of this section applies to light-duty vehicles.

(2) The procedure for mileage accumulation will be the Durability Driving Schedule as specified in appendix IV to this part. A modified procedure may also be used if approved in advance by the Administrator. Except with the advance approval of the Administrator, all vehicles will accumulate mileage at a measured curb weight which is within 100 pounds of the estimated curb weight. If the loaded vehicle weight is within 100 pounds of being included in the next higher inertia weight class as specified in § 86.129, the manufacturer may elect to conduct the respect emission tests at higher loaded vehicle weight.

(3) *Emission-data vehicles*. Unless otherwise provided for in § 86.091–23(a), emission-data vehicles shall be operated and tested as follows:

(i) *Otto-cycle*. (A) The manufacturer shall determine, for each engine family, the mileage at which the engine-system combination is stabilized for emission-data testing. The manufacturer shall maintain, and provide to the Administrator if requested, a record of the rationale used in making this determination. The manufacturer may elect to accumulate 4,000 miles on each test vehicle within an engine family without making a determination. The manufacturer must accumulate a minimum of 2,000 miles (3,219 kilometers) on each test vehicle within an engine family. All test vehicle mileage must be accurately determined, recorded, and reported to the Administrator. Any vehicle used to represent emission-data vehicle selections under § 86.092–24(b)(1) shall be equipped with an engine and emission control system that has accumulated the mileage the manufacturer chose to accumulate on the test vehicle. Fuel economy data generated from certification vehicles selected in accordance with § 86.092–24(b)(1) with engine-system combinations that have accumulated more than 10,000 kilometers (6,200 miles) shall be factored in accordance with § 600.006–87(c). Complete exhaust and evaporative (if required) emission tests shall be conducted for each emission-data vehicle selection under § 86.092–24(b)(1). The Administrator may determine under § 86.092–24(f) that no testing is required.

(B) Emission tests for emission-data vehicle(s) selected for testing under § 86.092–24(b)(1)(v) or (viii) shall be conducted at the mileage (2,000 mile minimum) at which the engine-system combination is stabilized for emission testing under high-altitude conditions.

(C) Exhaust and evaporative emissions tests for emission-data vehicle(s) selected for testing under § 86.092–24(b)(1) (i), (ii), (iii), (iv), or (vii)(B) shall be conducted at the mileage (2,000 mile minimum) at which the engine-system combination is stabilized for emission testing under low-altitude conditions.

(D) For each engine family, the manufacturer will either select one vehicle previously selected under § 86.092–24(b)(1) (i) through (iv) to be tested under high-altitude conditions or provide a statement in accordance with § 86.092–24(b)(1)(v). Vehicles shall meet emission standards under both low- and high-altitude conditions without manual adjustments or modifications. In addition, any emission control device used to conform with the emission standards under high-altitude conditions shall initially actuate (automatically) no higher than 4,000 feet above sea level.

(4)(i) *Durability data vehicles*. (A) Unless otherwise provided for in § 86.091–

23(a), each durability-data vehicle shall be driven, with all emission control systems installed and operating, for 50,000 miles or such lesser distance as the Administrator may agree to as meeting the objective of this procedure.

(B) Complete exhaust emission tests shall be made at test point mileage intervals that the manufacturer determines.

(C) At a minimum, two complete exhaust emission tests shall be made. The first test shall be made at a distance not greater than 6,250 miles. The last shall be made at 50,000 miles.

(D) The mileage interval between test points must be of equal length except for the interval between zero miles and the first test, and any interval before or after testing conducted in conjunction with vehicle maintenance as specified in § 86.090–25(g)(2).

(ii) The manufacturer may, at its option, alter the durability-data vehicle at the selected test point to represent emission-data vehicle(s) within the same engine-system combination and perform emission tests on the altered vehicle. Upon completion of emission testing, the manufacturer may return the test vehicle to the durability-data vehicle configuration and continue mileage accumulation.

(5)(i) All tests required by this subpart on emission-data vehicles shall be conducted at a mileage equal to or greater than the mileage the manufacturer determines under paragraph (a)(3) of this section.

(ii) All tests required by this subpart on durability-data vehicles shall be conducted within 250 miles of each of the test points.

(6)(i)(A) The manufacturer may conduct multiple tests at any test point at which the data are intended to be used in the deterioration factor. At each test point where multiple tests are conducted, the test results from all valid tests shall be averaged to determine the data point to be used in the deterioration factor calculation, except under paragraph (a)(6)(i)(B) of this section. The test results from emission tests performed before maintenance affecting emissions shall not be averaged with test results after the maintenance.

(B) The manufacturer is not required to average multiple tests if the manufacturer conducts no more than three tests at each test point and if the number of tests at each test point is equal. All test points must be treated the same for all exhaust pollutants.

(ii) The results of all emission testing shall be supplied to the Administrator. The manufacturer shall furnish to the Administrator explanation for voiding any test. The Administrator will determine if voiding the test was appropriate based upon the explanation given by the manufacturer for the voided test. Tests between test points may be conducted as required by the Administrator. Data from all tests (including voided tests) may be submitted weekly to the Administrator, but shall be air posted or delivered to the Administrator within 7 days after completion of the test. In addition, all test data shall be compiled and provided to the Administrator in accordance with § 86.091–23. Where the Administrator conducts a test on a durability-data vehicle at a prescribed test point, the results of that test will be used in the calculation of the deterioration factor.

(iii) The results of all emission tests shall be rounded, using the ''Rounding Off Method'' specified in ASTM E 29–67, to the number of places to the right of the decimal point indicated by expressing the applicable emission standard of this subpart to one additional significant figure.

(7) Whenever a manufacturer intends to operate and test a vehicle which may be used for emission or durability data, the manufacturer shall retain in its records all information concerning all emissions tests and maintenance, including vehicle alterations to represent other vehicle selections. For emission-data vehicles, this information shall be submitted, including the vehicle description and specification information required by the Administrator, to the Administrator following the emission-data test. For durability-data vehicles, this information shall be submitted following the 5,000-mile test.

(8) Once a manufacturer submits the information required in paragraphs (a)(7) of this section for a durability-data vehicle, the manufacturer shall continue to run the vehicle to 50,000

miles, and the data from the vehicle will be used in the calculations under § 86.091–28. Discontinuation of a durability-data vehicle shall be allowed only with the consent of the Administrator.

(9)(i) The Administrator may elect to operate and test any test vehicle during all or any part of the mileage accumulation and testing procedure. In such cases, the manufacturer shall provide the vehicle(s) to the Administrator with all information necessary to conduct this testing.

(ii) The test procedures in §§ 86.106 through 86.145 will be followed by the Administrator. The Administrator will test the vehicles at each test point. Maintenance may be performed by the manufacturer under such conditions as the Administrator may prescribe.

(iii) The data developed by the Administrator for the engine-system combination shall be combined with any applicable data supplied by the manufacturer on other vehicles of that combination to determine the applicable deterioration factors for the combination. In the case of a significant discrepancy between data developed by the Administrator and that submitted by the manufacturer, the Administrator's data shall be used in the determination of deterioration factors.

(10) Emission testing of any type with respect to any certification vehicle other than that specified in this part is not allowed except as such testing may be specifically authorized by the Administrator.

(11) This section does not apply to testing conducted to meet the requirements of § 86.091–23(b)(2).

(b)(1) Paragraph (b) of this section applies to light-duty trucks.

(2) There are three types of mileage or service accumulation applicable to light-duty trucks:

(i) Mileage or service accumulation on vehicles, engines, subsystems, or components selected by the manufacturer under § 86.092–24(c)(2)(i). The manufacturer determines the form and extent of this mileage or service accumulation, consistent with good engineering practice, and describes it in the application for certification.

(ii) Mileage accumulation of the duration selected by the manufacturer on emission-data vehicles selected under § 86.092–24(b)(1). The procedure for mileage accumulation will be the Durability Driving Schedule as specified in appendix IV to this part. A modified procedure may also be used if approved in advance by the Administrator. Except with the advance approval of the Administrator, all vehicles will accumulate mileage at a measured curb weight which is within 100 pounds of the estimated curb weight. If the loaded vehicle weight is within 100 pounds of being included in the next higher inertia weight class as specified in § 86.129, the manufacturer may elect to conduct the respective emission tests at the test weight corresponding to the higher loaded vehicle weight.

(iii) Service or mileage accumulation which may be part of the test procedures used by the manufacturer to establish evaporative emission deterioration factors.

(3) Exhaust emission deterioration factors will be determined on the basis of the mileage or service accumulation described in paragraph (b)(2)(i) of this section and related testing, according to the manufacturer's procedures.

(4) Each emission-data vehicle shall be operated and tested as follows:

(i) *Otto-cycle.* (A) The manufacturer shall determine, for each engine family, the mileage at which the engine-system combination is stabilized for emission-data testing. The manufacturer shall maintain, and provide to the Administrator if requested, a record of the rationale used in making this determination. The manufacturer may elect to accumulate 4,000 miles on each test vehicle within an engine family without making a determination. The manufacturer must accumulate a minimum of 2,000 miles (3,219 kilometers) on each test vehicle within an engine family. All test vehicle mileage must be accurately determined, recorded, and reported to the Administrator. Any vehicle used to represent emission-data vehicle selections under § 86.092–24(b)(1) shall be equipped with an engine and emission control system that has accumulated the mileage the manufacturer chose to accumulate on the test vehicle. Fuel economy data generated from certification vehicles selected in accordance with § 86.092–

24(b)(1) with engine-system combinations that have accumulated more than 10,000 kilometers (6,200 miles) shall be factored in accordance with § 600.006–87(c). Complete exhaust emission tests shall be conducted for each emission-data vehicle selection under § 86.092–24(b)(1). The Administrator may determine under § 86.092–24(f) that no testing is required.

(B) Emission tests for emission-data vehicle(s) selected for testing under § 86.092–24 (b)(1)(v) or (b)(1)(viii) shall be conducted at the mileage (2,000 mile minimum) at which the engine-system combination is stabilized for emission testing or at 6,436 kilometers (4,000 miles) under high-altitude conditions.

(C) Exhaust and evaporative emission tests for emission-data vehicle(s) selected for testing under § 86.092–24(b)(1)(ii), (iii), (iv)(A), or (vii)(B) shall be conducted at the mileage (2,000 mile minimum) at which the engine-system combination is stabilized for emission testing or at 6,436 kilometer (4,000 mile) test point under low-altitude conditions.

(D) If the manufacturer recommends adjustments or modifications in order to conform to emission standards at high altitude, such adjustments or modifications shall be made to the test vehicle selected under § 86.092–24(b)(1)(v) and (viii) (in accordance with the instructions to be provided to the ultimate purchaser) before being tested under high-altitude conditions.

(ii) *Diesel.* (A) The manufacturer shall determine, for each engine family, the mileage at which the engine-system combination is stabilized for emission-data testing. The manufacturer shall maintain, and provide to the Administrator if requested, a record of the rationale used in making this determination. The manufacturer may elect to accumulate 4,000 miles on each test vehicle within an engine family without making a determination. The manufacturer must accumulate a minimum of 2,000 miles (3,219 kilometers) on each test vehicle within an engine family. All test vehicle mileage must be accurately determined, recorded, and reported to the Administrator. Any vehicle used to represent emission-data vehicle selections under § 86.092–24(b)(1) shall be equipped with an engine and emission control system that has accumulated the mileage the manufacturer chose to accumulate on the test vehicle. Fuel economy data generated from certification vehicles selected in accordance with § 86.092–24(b)(1) with engine-system combinations that have accumulated more than 10,000 kilometers (6,200 miles) shall be factored in accordance with § 600.006–87(c). Complete exhaust emission tests shall be conducted for each emission-data vehicle selection under § 86.092–24(b)(1). The administrator may determine under § 86.092–24(f) that no testing is required.

(B) Emission tests for emission-data vehicle(s) selected for testing under § 86.092–24 (b)(1)(v) shall be conducted at the mileage (2,000 mile minimum) at which the engine-system combination is stabilized for emission testing or at the 6,436 kilometer (4,000 mile) test point under high-altitude conditions.

(C) Exhaust and evaporative emission tests for emission-data vehicle(s) selected for testing under § 86.092–24 (b)(1)(ii), (iii), and (iv) shall be conducted at the mileage (2,000 mile minimum) at which the engine-system combination is stabilized for emission testing or at the 6,436 kilometer (4,000 mile) test point under low-altitude conditions.

(D) If the manufacturer recommends adjustments or modifications in order to conform to emission standards at high altitude, such adjustments or modifications shall be made to the test vehicle selected under § 86.092–24(b)(1)(v) and (viii) (in accordance with the instructions to be provided to the ultimate purchaser) before being tested under high-altitude conditions.

(iii) [Reserved]

(iv) All tests required by this subpart on emission-data vehicles shall be conducted at a mileage equal to or greater than the mileage the manufacturer determines under paragraph (b)(4) of this section.

(c)(1) Paragraph (c) of this section applies to heavy-duty engines.

(2) There are two types of service accumulation applicable to heavy-duty engines:

(i) Service accumulation on engines, subsystems, or components selected by the manufacturer under § 86.092–

24(c)(3)(i). The manufacturer determines the form and extent of this service accumulation, consistent with good engineering practice, and describes it in the application for certification.

(ii) Dynamometer service accumulation on emission-data engines selected under § 86.092–24 (b)(2) or (b)(3). The manufacturer determines the engine operating schedule to be used for dynamometer service accumulation, consistent with good engineering practice. A single engine operating schedule shall be used for all engines in an engine family-control system combination. Operating schedules may be different for different combinations.

(3) Exhaust emission deterioration factors will be determined on the basis of the service accumulation described in paragraph (b)(2)(i) of this section and related testing, according to the manufacturer's procedures.

(4) The manufacturer shall determine, for each engine family, the number of hours at which the engine system combination is stabilized (no less than 62 hours for catalyst equipped) for emission-data testing. The manufacturer shall maintain, and provide to the Administrator if requested a record of the rationale used in making this determination. The manufacturer may elect to accumulate 125 hours on each test engine within an engine family without making a determination. Any engine used to represent emission-data engine selections under § 86.092–24(b)(2) shall be equipped with an engine system combination that has accumulated at least the number of hours determined under this paragraph. Complete exhaust emission tests shall be conducted for each emission-data engine selection under § 86.092–24(b)(2). Evaporative emission controls need not be connected provided normal operating conditions are maintained in the engine induction system. The Administrator may determine under § 86.092–24(f) that no testing is required.

(d)(1) Paragraph (d) of this section applies to both light-duty trucks and heavy-duty engines.

(2)(i) The results of all emission testing shall be supplied to the Administrator. The manufacturer shall furnish to the Administrator explanation for voiding any test. The Administrator will determine if voiding the test was appropriate based upon the explanation given by the manufacturer for the voided test. Tests between test points may be conducted as required by the Administrator. Data from all tests (including voided tests) may be submitted weekly to the Administrator, but shall be air posted or delivered to the Administrator within 7 days after completion of the test. In addition, all test data shall be compiled and provided to the Administrator in accordance with § 86.092–23. Where the Administrator conducts a test on a durability-data vehicle at a prescribed test point, the results of that test will be used in the calculation of the deterioration factor.

(ii) The results of all emission tests shall be recorded and reported to the Administrator. These test results shall be rounded, in accordance with ASTM E 29–67, to the number of decimal places contained in the applicable emission standard expressed to one additional significant figure.

(3) Whenever a manufacturer intends to operate and test a vehicle (or engine) which may be used for emission data, the manufacturer shall retain in its records all information concerning all emissions tests and maintenance, including vehicle (or engine) alterations to represent other vehicle (or engine) selections. This information shall be submitted, including the vehicle (or engine) description and specification information required by the Administrator, to the Administrator following the emission-data test.

(4)–(5) [Reserved]

(6) Emission testing of any type with respect to any certification vehicle or engine other than that specified in this subpart is not allowed except as such testing may be specifically authorized by the Administrator.

[55 FR 7194, Feb. 28, 1990]

§ 86.092–35 Labeling.

(a) The manufacturer of any motor vehicle (or motor vehicle engine) subject to the applicable emission standards (and family emission limits, as appropriate) of this subpart, shall, at the time of manufacture, affix a permanent legible label, of the type and in the manner described below, containing the information hereinafter provided,

to all production models of such vehicles (or engines) available for sale to the public and covered by a certificate of conformity under § 86.091–30(a).

(1) *Light-duty vehicles.* (i) A permanent, legible label shall be affixed in a readily visible position in the engine compartment.

(ii) The label shall be affixed by the vehicle manufacturer who has been issued the certificate of conformity for such vehicle, in such manner that it cannot be removed without destroying or defacing the label. The label shall not be affixed to any equipment which is easily detached from such vehicle.

(iii) The label shall contain the following information lettered in the English language in block letters and numerals, which shall be of a color that contrasts with the background of the label:

(A) The label heading: Vehicle Emission Control Information;

(B) Full corporate name and trademark of manufacturer;

(C) Engine displacement (in cubic inches or liters), engine family identification and evaporative family identification;

(D) Engine tune-up specifications and adjustments, as recommended by the manufacutrer in accordance with the applicable emission standards (or family emission limits, as applicable), including but not limited to idle speeds(s), ignition timing, the idle air-fuel mixture setting procedure and value (e.g., idle CO, idle air-fuel ratio, idle speed drop), high idle speed, initial injection timing and valve lash (as applicable), as well as other parameters deemed necessary by the manufacturer. These specifications should indicate the proper transmission position during tuneup and what accessories (e.g., air conditioner), if any, should be in operation;

(E) An unconditional statement of compliance with the appropriate model year U.S. Environmental Protection Agency regulations which apply to light-duty vehicles;

(F) For vehicles which are part of the diesel particulate averaging program, the family particulate emission limit to which the vehicle is certified;

(G) For vehicles that have been exempted from compliance with the emission standards at high altitude, as specified in § 86.090–8(h):

(*1*) A highlighted statement (e.g., underscored or boldface letters) that the vehicle is certified to applicable emission standards at low altitude only;

(*2*) A statement that the vehicle's unsatisfactory performance under high-altitude conditions makes it unsuitable for principal use at high altitude, and

(*3*) A statement that the emission performance warranty provisions of 40 CFR part 85, subpart V do not apply when the vehicle is tested at high altitude; and

(H) For vehicles that have been exempted from compliance with the emission standards at low altitude, as specified in § 86.090–8(i):

(*1*) A highlighted statement (e.g., underscore or boldface letters) that the vehicle is certified to applicable emission standards at high altitude only; and

(*2*) A statement that the emission performance warranty provisions of 40 CFR part 85, subpart V do not apply when the vehicle is tested at low altitude.

(I) The vacuum hose routing diagram applicable to the vehicles if the vehicles are equipped with vacuum actuated emission and emission-related components. The manufacturer may, at its option, use a separate label for the vacuum hose routing diagram provided that the vacuum hose diagram is placed in a visible and accessible position as provided in this section.

(J) Vehicles granted final admission under § 85.1505 must comply with the labeling requirements contained in § 85.1510.

(2) *Light-duty truck and heavy-duty vehicles optionally certified in accordance with the light-duty truck provisions.* (i) A legible, permanent label shall be affixed in a readily visible position in the engine compartment.

(ii) The label shall be affixed by the vehicle manufacturer who has been issued the certificate of conformity for such vehicle, in such a manner that it cannot be removed without destroying or defacing the label. The label shall not be affixed to any equipment which is easily detached from such vehicle.

(iii) The label shall contain the following information lettered in the

English language in block letters and numerals, which shall be of a color that contrasts with the background of the label.

(A) The label heading: Important Vehicle Information;

(B) Full corporate name and trademark of manufacturer;

(C) Engine displacement (in cubic inches or liters) and engine family identification;

(D) Engine tune-up specifications and adjustments, as recommended by the manufacturer in accordance with the applicable emission standards (or family emission limits, as appropriate), including but not limited to idle speed(s), ignition timing, the idle air-fuel mixture setting procedure and value (e.g., idle CO, idle air-fuel ratio, idle speed drop), high idle speed, initial injection timing, and valve lash (as applicable), as well as other parameters deemed necessary by the manufacturer. These specifications should indicate the proper transmission position during tuneup and what accessories (e.g., air conditioner), if any, should be in operation. If adjustments or modifications to the vehicle are necessary to insure compliance with emission standards (or family emission limits, as appropriate) at either high or low altitude, the manufacturer shall either include the instructions for such adjustments on the label, or indicate on the label where instructions for such adjustments may be found. The label shall indicate whether the engine tune-up or adjustment specifications are applicable to high altitude, low altitude, or both;

(E)(*1*) *Light-duty trucks.* One of the prominent statements, as applicable:

(*i*) Labels for light-duty trucks certified to the oxides of nitrogen standard of 1.12 grams per vehicle mile shall include the following statement: ''This vehicle conforms to U.S. EPA regulations applicable to 19___ Model Year New Light-Duty Trucks.''

(*ii*) Labels for light-duty trucks certified to the oxides of nitrogen standard of 1.7 grams per vehicle mile shall include the following statement: ''This vehicle conforms to U.S. EPA regulations applicable to 19___ Model Year New Light-Duty Trucks with a curb weight greater than 3,450 pounds.''

(*2*) *Heavy-duty vehicles optionally certified in accordance with the light-duty truck provisions.* ''This heavy-duty vehicle conforms to the U.S. EPA regulations applicable to 19___ Model Year Light-Duty Trucks under the special provision of 40 CFR 86.092–1(b).''

(F) If the manufacturer is provided an alternate useful life period under the provisions of § 86.091–21(f), the prominent statement: ''This vehicle has been certified to meet U.S. EPA standards for a useful-life period of _____ years or _____ miles of operation, whichever occurs first. This vehicle's actual life may vary depending on its service application.'' The manufacturer may alter this statement only to express the assigned alternate useful life in terms other than years or miles (e.g., hours, or miles only).

(G) A statement, if applicable, that the adjustments or modifications indicated on the lable are necessary to ensure emission control compliance at the altitude specified.

(H) A statement, if applicable, that the high-altitude vehicle was designated or modified for principal use at high altitude. This statement must be affixed by the manufacturer at the time of assembly or by any dealer who performs the high-altitude modification or adjustment prior to sale to an ultimate purchaser.

(I) For vehicles that have been exempted from compliance with the high-altitude emission standards, as specified in § 86.091–9(g)(2).

(*1*) A highlighted statement (e.g., underscored or boldface letters) that the vehicle is certified to applicable emission standards at low altitude only.

(*2*) A statement that the vehicle's unsatisfactory performance under high-altitude conditions makes it unsuitable for principal use at high altitude, and

(*3*) A statement that the emission performance warranty provisions of 40 CFR part 85, subpart V do not apply when the vehicle is tested at high altitude:

(J) For vehicles which are included in the diesel particulate averaging program, the family particulate emission limit to which the vehicle is certified.

(K) For vehicles which are included in the light-duty truck NO_X averaging

program, the family NO_X emissions limit to which the vehicle is certified.

(L) The vacuum hose routing diagram applicable to the vehicles if the vehicles are equipped with vacuum actuated emission and emission-related components. The manufacturer may, at its option, use a separate label for the vacuum hose routing diagram provided that the vacuum hose diagram is placed in a visible and accessible position as provided by this section.

(M) Vehicles granted final admission under § 85.1505 must comply with the labeling requirements contained in § 85.1510.

(3) *Heavy-duty engines.* (i) A permanent legible label shall be affixed to the engine in a position in which it will be readily visible after installation in the vehicle.

(ii) The label shall be attached to an engine part necessary for normal engine operation and not normally requiring replacement during engine life.

(iii) The label shall contain the following information lettered in the English language in block letters and numerals which shall be of a color that contrasts with the background of the label:

(A) The label heading: Important Engine Information.

(B) Full corporate name and trademark of manufacturer;

(C) Engine displacement (in cubic inches or liters) and engine family and model designations;

(D) Date of engine manufacture (month and year). The manufacturer may, in lieu of including the date of manufacture on the engine label, maintain a record of the engine manufacture dates. The manufacturer shall provide the date of manufacture records to the Administrator upon request.

(E) Engine specifications and adjustments as recommended by the manufacturer. These specifications should indicate the proper transmission position during tune-up and what accessories (e.g., air conditioner), if any, should be in operation;

(F) For Otto-cycle engines the label should include the idle speed, ignition timing, and the idle air-fuel mixture setting procedure and value (e.g., idle CO, idle air-fuel ratio, idle speed drop), and valve lash;

(G) For diesel engines the label should include the advertised hp at rpm, fuel rate at advertised hp in mm^3/stroke, valve lash, initial injection timing, and idle speed;

(H) The prominent statement: ''This engine conforms to U.S. EPA regulations applicable to 19____ Model Year New Heavy-Duty Engines.''

(I) If the manufacturer is provided with an alternate useful life period under the provisions of § 86.901–21(f), the prominent statement: ''This engine has been certified to meet U.S. EPA standards for a useful-life period of _____ miles or _____ hours of operation, whichever occurs first. This engine's actual life may vary depending on its service application.'' The manufacturer may alter this statement only to express the assigned alternate useful life in terms other than miles or hours (e.g., years, or hours only).

(J) *For diesel engines.* The prominent statement: ''This engine has a primary intended service application as a _____ heavy-duty engine.'' (The primary intended service applications are light, medium, and heavy, as defined in § 86.902–2.)

(K) *For Otto-cycle engines.* One of the following statements, as applicable:

(*1*) For engines certified to the emission standards under § 86.091–10 (a)(1) (i) or (iii), the statement: ''This engine is certified for use in all heavy-duty vehicles.''

(*2*) for gasoline-fueled engines certified under the provisions of § 86.091–10(a)(3)(i), the statement: ''This engine is certified for use in all heavy-duty vehicles under the special provision of 40 CFR § 86.091–10(a)(3)(i).''

(*3*) For engines certified to the emission standards under § 86.091–10 (a)(1) (ii) or (iv), the statement: ''This engine is certified for use only in heavy-duty vehicles with a gross vehicle weight rating above 14,000 lbs.''

(L) For all heavy-duty engines which are included in diesel heavy-duty particulate trading, banking or averaging programs, the particulate family emission limit to which the engine is certified.

(M) For all heavy-duty engines which are included in NO_X trading, banking or averaging programs, the NO_X family

emission limit to which the engine is certified.

(N) Engines granted final admission under § 85.1505 must comply with the labeling requirements contained in § 85.1510.

(iv) The label may be made up of one or more pieces: *Provided*, That all pieces are permanently attached to the same engine or vehicle part as applicable.

(4)(i) *Gasoline-fueled and methanol-fueled heavy-duty vehicles*. A permanent, legible label shall be affixed in a readily visible position in the engine compartment. If such vehicles do not have an engine compartment, the label required in paragraphs (a)(4) and (g)(1) of this section shall be affixed in a readily visible position on the operator's enclosure or on the engine.

(ii) The label shall be affixed by the vehicle manufacturer who has been issued the certificate of conformity for such vehicle, in such a manner that it cannot be removed without destroying or defacing the label. The label shall not be affixed to any equipment which is easily detached from such vehicle.

(iii) The label shall contain the following information lettered in the English language in block letters and numerals, which shall be of a color that contrasts with the background of the label:

(A) The label heading: Vehicle Emission Control Information;

(B) Full corporate name and trademark of manufacturer;

(C) Evaporative family identification;

(D) The maximum nominal fuel tank capacity (in gallons) for which the evaporative control system is certified; and,

(E) One of the following, as appropriate:

(*1*) An unconditional statement of compliance with the appropriate model year U.S. Environmental Protection Agency regulations which apply to gasoline-fueled heavy-duty vehicles.

(*2*) An unconditional statement of compliance with the appropriate model year U.S. Environmental Protection Agency regulations which apply to methanol-fueled heavy-duty vehicles.

(F) Vehicles granted final admission under § 85.1505 must comply with the labeling requirements contained in § 85.1510.

(b) The provisions of this section shall not prevent a manufacturer from also reciting on the label that such vehicle (or engine) conforms to any applicable state emission standards for new motor vehicles (or new motor vehicle engines) or any other information that such manufacturer deems necessary for, or useful to, the proper operation and satisfactory maintenance of the vehicle (or engine).

(c)(1) The manufacturer of any light-duty vehicle or light-duty truck subject to the emission standards (or family emission limits, as appropriate) of this subpart shall, in addition and subsequent to setting forth those statements on the label required by the Department of Transportation (DOT) pursuant to 49 CFR 567.4, set forth on the DOT label or an additional label located in proximity to the DOT label and affixed as described in 40 CFR 567.4(b), the following information in the English language, lettered in block letters and numerals not less than three thirty-seconds of an inch high, of a color that contrasts with the background of the label:

(i) The heading: ''Vehicle Emission Control Information.''

(ii)(A) *For light-duty vehicles*, The statement: ''This Vehicle Conforms to U.S. EPA Regulations Applicable to 19____ Model Year New Motor Vehicles.''

(B) *For light-duty trucks*, (*1*) The statement: ''This vehicle conforms to U.S. EPA regulations applicable to 19____ Model Year New Light-Duty Trucks.''

(*2*) If the manufacturer is provided an alternate useful life period under the provisions of § 86.091–21(f), the prominent statement: ''This vehicle has been certified to meet U.S. EPA standards for a useful-life period of ____ years or ____ miles of operation, whichever occurs first. This vehicle's actual life may vary depending on its service application.'' The manufacturer may alter this statement only to express the assigned alternate useful life in terms other than years or miles (e.g., hours, or miles only)

(iii) One of the following statements, as applicable, in letters and numerals

not less than six thirty-seconds of an inch high and of a color that contrasts with the background of the label:

(A) For all vehicles certified as non-catalyst-equipped: ''NON-CATALYST''

(B) For all vehicles certified as catalyst-equipped which are included in a manufacturer's catalyst control program for which approval has been given by the Administrator: ''CATALYST—APPROVED FOR IMPORT''

(C) For all vehicles certified as catalyst-equipped which are not included in a manufacturer's catalyst control program for which prior approval has been given by the Administrator: ''CATALYST''

(2) In lieu of selecting either of the labeling options of paragraph (c)(1) of this section, the manufacturer may add the information required by paragraph (c)(1)(iii) of this section to the label required by paragraph (a) of this section. The required information will be set forth in the manner prescribed by paragraph (c)(1)(iii) of this section.

(d) Incomplete light-duty trucks or incomplete heavy-duty vehicles optionally certified in accordance with the light-duty truck provisions shall have one of the following prominent statements, as applicable, printed on the label required by paragraph (a)(2) of this section in lieu of the statement required by paragraph (a)(2)(iii)(E) of this section.

(1) *Light-duty trucks.* (i) Labels for light-duty trucks certified to the oxides of nitrogen standard of 1.2 grams per vehicle mile shall include the following statement: ''This vehicle conforms to U.S. EPA regulations applicable to 19____ Model Year New Light-Duty Trucks when it does not exceed ____ pounds in curb weight, ____ pounds in gross vehicle weight rating, and ____ square feet in frontal area.''

(ii) Labels for light-duty trucks certified to the oxides of nitrogen standards of 1.7 grams per vehicle mile shall include the following statement: ''This vehicle conforms to U.S. EPA regulations applicable to 19____ Model Year New Light-Duty Trucks when it is between 3,450 pounds and _____ pounds in curb weight and it does not exceed _____ pounds in gross vehicle weight rating nor _____ square feet in frontal area.''

(2) *Heavy-duty vehicles optionally certified in accordance with the light-duty truck provisions.* ''This heavy-duty vehicle conforms to the U.S. EPA regulations applicable to 19____ Model Year Light-Duty Trucks under the special provision of 40 CFR 86.085–1(b) when it does not exceed _____ pounds in curb weight, _____ pounds in gross vehicle weight rating, and _____ square feet in frontal area.''

(e) Incomplete heavy-duty vehicles having a gross vehicle weight rating of 8,500 pounds or less shall have one of the following statements printed on the label required by paragraph (a)(3) of this section in lieu of the statement required by paragraph (a)(3)(iii)(H) of this section: ''This engine conforms to U.S. EPA regulations applicable to 19____ Model Year Heavy-Duty Engines when installed in a vehicle completed at a curb weight of more than 6,000 pounds or with a frontal area of greater than 45 square feet.''

(f) The manufacturer of any incomplete light-duty vehicle or light-duty truck shall notify the purchaser of such vehicle of any curb weight, frontal area, or gross vehicle weight rating limitations affecting the emission certificate applicable to that vehicle. This notification shall be transmitted in a manner consistent with National Highway Traffic Safety Administration safety notification requirements published in 49 CFR part 568.

(g)(1)(i) Incomplete gasoline-fueled heavy-duty vehicles shall have the following prominent statement printed on the label required in paragraph (a)(4) of this section: ''(Manufacturer's corporate name) has determined that this vehicle conforms to U.S. EPA regulations applicable to 19____ Model Year New Gasoline-Fueled Heavy-Duty Vehicles when completed with a nominal fuel tank capacity not to exceed _____ gallons. Persons wishing to add fuel tank capacity beyond the above maximum must submit a written statement to the Administrator that the hydrocarbon storage system has been upgraded according to the requirements of 40 CFR 86.092–35(g)(2).''

(ii) Incomplete methanol-fueled heavy-duty vehicles shall have the following prominent statement printed on the label required in paragraph (a)(4) of

this section: ''(Manufacturer's corporate name) has determined that this vehicle conforms to U.S. EPA regulations applicable to 19___ Model Year New Methanol-Fueled Heavy-Duty Vehicles when completed with a nominal fuel tank capacity not to exceed _____ gallons. Persons wishing to add fuel tank capacity beyond the above maximum must submit a written statement to the Administrator that the hydrocarbon storage system has been upgraded according to the requirements of 40 CFR 86.091–35(g)(2).''

(2) Persons wishing to add fuel tank capacity beyond the maximum specified on the label required in paragraph (g)(1) of this section shall:

(i) Increase the amount of fuel tank vapor storage material according to the following function:

$$\mathrm{Cap_f} = \mathrm{Cap_i}\left(\frac{\text{T. Vol.}}{\text{Max. Vol.}}\right)$$

Where:

$\mathrm{Cap_f}$ = final amount of fuel tank vapor storage material, grams.

$\mathrm{Cap_i}$ = initial amount of fuel tank vapor storage material, grams.

T. Vol. = total fuel tank volume of completed vehicle, gallons.

Max. Vol. = maximum fuel tank volume as specified on the label required in paragraph (g)(1) of this section, gallons.

(ii) Use, if applicable, hosing for fuel vapor routing which is at least as impermeable to hydrocarbon vapors as that used by the primary manufacturer.

(iii) Use vapor storage material with the same absorptive characteristics as that used by the primary manufacturer.

(iv) Connect, if applicable, any new hydrocarbon storage device to the existing hydrocarbon storage device in series such that the original hydrocarbon storage device is situated between the fuel tank and the new hydrocarbon storage device. The original hydrocarbon storage device shall be sealed such that vapors cannot reach the atmosphere. The elevation of the original hydrocarbon storage device shall be equal to or lower than the new hydrocarbon storage device.

(v) Submit a written statement to the Administrator that paragraphs (g)(2)(i) through (g)(2)(iv) of this section have been complied with.

(3) If applicable, the Administrator will send a return letter verifying the receipt of the written statement required in paragraph (g)(2)(v) of this section.

(h)(1) Light-duty trucks and heavy-duty vehicles and engines for which nonconformance penalties are to be paid in accordance with § 86.1113–87(b) shall have the following information printed on the label required in paragraph (a) of this section. The manufacturer shall begin labeling production engines or vehicles within 10 days after the completion of the PCA.

(i) The statement: ''The manufacturer of this engine/vehicle will pay a nonconformance penalty to be allowed to introduce it into commerce at an emission level higher than the applicable emission standard. The compliance level (or new emission standard) for this engine/vehicle is _____.'' (The manufacturer shall insert the applicable pollutant and compliance level calculated in accordance with § 86.1112–87(a).)

(2) If a manufacturer introduces an engine or vehicle into commerce prior to the compliance level determination of § 86.1112–87(a), it shall provide the engine or vehicle owner with a label as described above to be affixed in a location in proximity to the label required in paragraph (a) of this section within 30 days of the completion of the PCA.

[55 FR 7197, Feb. 28, 1990, as amended at 55 FR 30627, July 26, 1990]

§ 86.093–2 Definitions.

The definitions of § 86.092–2 continue to apply. The definitions listed in this section apply beginning with the 1993 model year.

Bus means a heavy heavy-duty diesel-powered passenger-carrying vehicle with a load capacity of fifteen or more passengers that is centrally fueled, and all urban buses. This definition only applies in the context of §§ 86.093–11 and 86.093–35.

Centrally fueled bus means a bus that is refueled at least 75 percent of the time at one refueling facility that is owned, operated, or controlled by the bus operator.

Urban bus means a passenger-carrying vehicle powered by a heavy heavy-duty diesel engine, or of a type normally powered by a heavy heavy-duty diesel engine, with a load capacity of fifteen or more passengers and intended primarily for intracity operation, *i.e.*, within the confines of a city or greater metropolitan area. Urban bus operation is characterized by short rides and frequent stops. To facilitate this type of operation, more than one set of quick-operating entrance and exit doors would normally be installed. Since fares are usually paid in cash or tokens, rather than purchased in advance in the form of tickets, urban buses would normally have equipment installed for collection of fares. Urban buses are also typically characterized by the absence of equipment and facilities for long distance travel, *e.g.*, rest rooms, large luggage compartments, and facilities for stowing carry-on luggage. The useful life for urban buses is the same as the useful life for other heavy heavy-duty diesel engines.

[58 FR 15795, Mar. 24, 1993]

§ 86.093–11 Emission standards for 1993 and later model year diesel heavy-duty engines.

(a)(1) Exhaust emissions from new 1993 and later model year diesel heavy-duty engines shall not exceed the following:

(i)(A) *Hydrocarbons (for petroleum-fueled diesel engines).* 1.3 grams per brake horsepower-hour (0.48 gram per megajoule), as measured under transient operating conditions.

(B) *Total Hydrocarbon Equivalent (for methanol-fueled diesel engines).* 1.3 grams per brake horsepower-hour (0.48 gram per megajoule), as measured under transient operating conditions.

(ii) *Carbon monoxide.* (A) 15.5 grams per brake horsepower-hour (5.77 grams per megajoule), as measured under transient operating conditions.

(B) 0.50 percent of exhaust gas flow at curb idle (methanol-fueled diesel only).

(iii) *Oxides of nitrogen.* (A) 5.0 grams per brake horsepower-hour (1.9 grams per megajoule), as measured under transient operating conditions.

(B) A manufacturer may elect to include any or all of its diesel heavy-duty engine families in any or all of the NO_X averaging, trading, or banking programs for heavy-duty engines, within the restrictions described in § 86.091–15. If the manufacturer elects to include engine families in any of the programs, the NO_X FELs may not exceed 6.0 grams per brake horsepower-hour (2.2 grams per megajoule). This ceiling value applies whether credits for the family are derived from averaging, trading or banking programs.

(iv) *Particulate.* (A) For diesel engines to be used in buses, 0.10 grams per brake horsepower-hour (0.037 gram per megajoule), as measured under transient operating conditions.

(B) For all other diesel engines only, 0.25 grams per brake horsepower-hour (0.093 gram per megajoule), as measured under transient operating conditions.

(C) A manufacturer may elect to include any or all of its diesel heavy-duty engine families in any or all of the particulate averaging, trading, or banking programs for heavy-duty engines, within the restrictions described in § 86.094.15. If the manufacturer elects to include engine families in any of these programs, the particulate FEL may not exceed:

(*1*) 0.25 gram per brake horsepower-hour (0.093 gram per megajoule) for diesel engines intended for use in urban buses.

(*2*) 0.60 gram per brake horsepower-hour (0.22 gram per megajoule) for diesel engines *not* intended for use in urban buses.

(*3*) The ceiling values in paragraphs (a)(1)(iv)(C) (*1*) and (*2*) of this section apply whether credits for the family are derived from averaging, trading or banking programs.

(2) The standards set forth in paragraph (a)(1) of this section refer to the exhaust emitted over operating schedules as set forth in paragraph (f)(2) of appendix I of this part, and measured and calculated in accordance with the procedures set forth in subpart N of this part, except as noted in § 86.091–23(c)(2) (i) and (ii).

(b)(1) The opacity of smoke emission from new 1993 and later model year diesel heavy-duty engines shall not exceed:

(i) 20 percent during the engine acceleration mode.

(ii) 15 percent during the engine lugging mode.

(iii) 50 percent during the peaks in either mode.

(2) The standards set forth in paragraph (b)(1) of this section refer to exhaust smoke emissions generated under the conditions set forth in subpart I of this part and measured and calculated in accordance with those procedures.

(3) *Evaporative emissions* (total of non-oxygenated hydrocarbons plus methanol) for 1993 and later model year heavy-duty vehicles equipped with methanol-fueled diesel engines shall not exceed:

(i) For vehicles with Gross Vehicle Weight Rating of up to 14,000 lbs., 3.0 grams per test.

(ii) For vehicles with a Gross Vehicle Weight Rating of greater than 14,000 lbs., 4.0 grams per test.

(4)(i) For vehicles with a Gross Vehicle Weight Rating of up to 26,000 lbs., the standards set forth in paragraph (b)(3) of this section refer to a composite sample of evaporative emission collected under the conditions set forth in subpart M of this part and measured in accordance with those procedures.

(ii) For vehicles with a Gross Vehicle Weight Rating of greater than 26,000 lbs., the standard set forth in paragraph (b)(3)(ii) of this section refers to the manufacturers' engineering design evaluation using good engineering practice (a statement of which is required in § 86.091–23(b)(4)(ii)).

(c) No crankcase emissions shall be discharged into the ambient atmosphere from any new 1993 or later model year methanol-fueled diesel, or any naturally-aspirated diesel heavy-duty engine. For petroleum fueled engines only, this provision does not apply to engines using turbocharters, pumps, blowers or superchargers for air induction.

(d) Every manufacturer of new motor vehicle engines subject to the standard prescribed in this section shall, prior to taking any of the actions specified in section 203(a)(1) of the Act, test or cause to be tested motor vehicle engines in accordance with applicable procedures in subpart I or N of this part to ascertain that such test engines meet the requirements of paragraphs (a), (b), and (c) and (d) of this section.

[56 FR 64711, Dec. 12, 1991, as amended at 58 FR 15795, Mar. 24, 1993]

§ 86.093–35 Labeling.

(a) The manufacturer of any motor vehicle (or motor vehicle engine) subject to the applicable emission standards (and family emission limits, as appropriate) of this subpart, shall, at the time of manufacture, affix a permanent legible label, of the type and in the manner described in this section, containing the information hereinafter provided, to all production models of such vehicles (or engines) available for sale to the public and covered by a certificate of conformity under § 86.091–30(a). Where blanks appear in this section, manufacturers are required to fill in the appropriate information in the blanks.

(1) *Light-duty vehicles.* (i) A permanent, legible label shall be affixed in a readily visible position in the engine compartment.

(ii) The label shall be affixed by the vehicle manufacturer who has been issued the certificate of conformity for such vehicle, in such manner that it cannot be removed without destroying or defacing the label. The label shall not be affixed to any equipment which is easily detached from such vehicle.

(iii) The label shall contain the following information lettered in the English language in block letters and numerals, which shall be of a color that contrasts with the background of the label:

(A) The label heading: Vehicle Emission Control Information;

(B) Full corporate name and trademark of manufacturer;

(C) Engine displacement (in cubic inches or liters), engine family identification and evaporative family identification;

(D) Engine tune-up specifications and adjustments, as recommended by the manufacturer in accordance with the applicable emission standards (or family emission limits, as applicable), including but not limited to idle speed(s), ignition timing, the idle air-fuel mixture setting procedures and value (e.g., idle CO, idle air-fuel ratio, idle speed drop), high idle speed, initial injection

timing and valve lash (as applicable), as well as other parameters deemed necessary by the manufacturer. These specifications should indicate the proper transmission position during tuneup and what accessories (e.g., air conditioner), if any, should be in operation;

(E) An unconditional statement of compliance with the appropriate model year U.S. Environmental Protection Agency regulations which apply to light-duty vehicles;

(F) For vehicles which are part of the diesel particulate averaging program, the family particulate emission limit to which the vehicle is certified;

(G) For vehicles that have been exempted from compliance with the emission standards at high altitude, as specified in § 86.090–8(h):

(*1*) A highlighted statement (e.g., underscored or boldface letters) that the vehicle is certified to applicable emission standards at low altitude only;

(*2*) A statement that the vehicle's unsatisfactory performance under high-altitude conditions makes it unsuitable for principal use at high altitude; and

(*3*) A statement that the emission performance warranty provisions of 40 CFR part 85, subpart V do not apply when the vehicle is tested at high altitude;

(H) For vehicles that have been exempted from compliance with the emission standards at low altitude, as specified in § 86.090–8(i):

(*1*) A highlighted statement (e.g., underscored or boldface letters) that the vehicle is certified to applicable emission standards at high altitude only; and

(*2*) A statement that the emission performance warranty provisions of 40 CFR part 85, subpart V do not apply when the vehicle is tested at low altitude;

(I) The vacuum hose routing diagram applicable to the vehicles if the vehicles are equipped with vacuum actuated emission and emission-related components. The manufacturer may, at its option, use a separate label for the vacuum hose routing diagram provided that the vacuum hose diagram is placed in a visible and accessible position as provided in this section; and

(J) Vehicles granted final admission under § 85.1505 must comply with the labeling requirements contained in § 85.1510.

(2) *Light-duty truck and heavy-duty vehicles optionally certified in accordance with the light-duty truck provisions.* (i) A legible, permanent label shall be affixed in a readily visible position in the engine compartment.

(ii) The label shall be affixed by the vehicle manufacturer who has been issued the certificate of conformity for such vehicle, in such a manner that it cannot be removed without destroying or defacing the label. The label shall not be affixed to any equipment which is easily detached from such vehicle.

(iii) The label shall contain the following information lettered in the English language in block letters and numerals, which shall be of a color that contrasts with the background of the label.

(A) The label heading: Important Vehicle Information;

(B) Full corporate name and trademark of manufacturer;

(C) Engine displacement (in cubic inches or liters) and engine family identification;

(D) Engine tune-up specifications and adjustments, as recommended by the manufacturer in accordance with the applicable emission standards (or family emission limits, as appropriate), including but not limited to idle speed(s), ignition timing, the idle air-fuel mixture setting procedure and value (e.g., idle CO, idle air-fuel ratio, idle speed drop), high idle speed, initial injection timing, and valve lash (as applicable), as well as other parameters deemed necessary by the manufacturer. These specifications should indicate the proper transmission position during tuneup and what accessories (e.g., air conditioner), if any, should be in operation. If adjustments or modifications to the vehicle are necessary to insure compliance with emission standards (or family emission limits, as appropriate) at either high or low altitude, the manufacturer shall either include the instructions for such adjustments on the label, or indicate on the label where instructions for such adjustments may be found. The label shall indicate whether the engine tune-up or adjustment specifications are applicable to high altitude, low altitude, or both;

(E)(*1*) *Light-duty trucks.* One of the prominent statements, as applicable:

(*i*) Labels for light-duty trucks certified to the oxides of nitrogen standard of 1.12 grams per vehicle mile shall include the following statement: ''This vehicle conforms to U.S. EPA regulations applicable to 19___ Model Year New Light-Duty Trucks.''

(*ii*) Labels for light-duty trucks certified to the oxides of nitrogen standard of 1.7 grams per vehicle mile shall include the following statement: ''This vehicle conforms to U.S. EPA regulations applicable to 19___ Model Year New Light-Duty Trucks with a curb weight greater than 3,450 pounds.''

(*2*) Heavy-duty vehicles optionally certified in accordance with the light-duty truck provisions. ''This heavy-duty vehicle conforms to U.S. EPA regulations applicable to 19___ Model Year New Light-Duty Trucks under the special provision of 40 CFR 86.092–1(b).'';

(F) If the manufacturer is provided an alternate useful life period under the provisions of § 86.091–21(f), the prominent statement: ''This vehicle has been certified to meet U.S. EPA standards for a useful-life period of ____ years or _____ miles of operation, whichever occurs first. This vehicle's actual life may vary depending on its service application.'' The manufacturer may alter this statement only to express the assigned alternate useful life in terms other than years or miles (e.g., hours, or miles only);

(G) A statement, if applicable, that the adjustments or modifications indicated on the label are necessary to ensure emission control compliance at the altitude specified;

(H) A statement, if applicable, that the high-altitude vehicle was designated or modified for principal use at high altitude. This statement must be affixed by the manufacturer at the time of assembly or by any dealer who performs the high-altitude modification or adjustment prior to sale to an ultimate purchaser;

(I) For vehicles that have been exempted from compliance with the high-altitude emission standards, as specified in § 86.091–9(g)(2).

(*1*) A highlighted statement (e.g., underscored or boldface letters) that the vehicle is certified to applicable emission standards at low altitude only;

(*2*) A statement that the vehicle's unsatisfactory performance under high-altitude conditions makes it unsuitable for principal use at high altitude; and

(*3*) A statement that the emission performance warranty provisions of 40 CFR part 85, subpart V do not apply when the vehicle is tested at high altitude;

(J) For vehicles which are included in the diesel particulate averaging program, the family particulate emission limit to which the vehicle is certified;

(K) For vehicles which are included in the light-duty truck NO_X averaging program, the family NO_X emissions limit to which the vehicle is certified;

(L) The vacuum hose routing diagram applicable to the vehicles if the vehicles are equipped with vacuum actuated emission and emission-related components. The manufacturer may, at its option, use a separate label for the vacuum hose routing diagram provided that the vacuum hose diagram is placed in a visible and accessible position as provided by this section;

(M) Vehicles granted final admission under § 85.1505 of this chapter must comply with the labeling requirements contained in § 85.1510 of this chapter.

(3) *Heavy-duty engines.* (i) A permanent legible label shall be affixed to the engine in a position in which it will be readily visible after installation in the vehicle.

(ii) The label shall be attached to an engine part necessary for normal engine operation and not normally requiring replacement during engine life.

(iii) The label shall contain the following information lettered in the English language in block letters and numerals which shall be of a color that contrasts with the background of the label:

(A) The label heading: Important Engine Information;

(B) Full corporate name and trademark of manufacturer;

(C) Engine displacement (in cubic inches or liters) and engine family and model designations;

(D) Date of engine manufacture (month and year). The manufacturer may, in lieu of including the date of

manufacture on the engine label, maintain a record of the engine manufacture dates. The manufacturer shall provide the date of manufacture records to the Administrator upon request;

(E) Engine specifications and adjustments as recommended by the manufacturer. These specifications should indicate the proper transmission position during tune-up and what accessories (e.g., air conditioner), if any, should be in operation;

(F) For Otto-cycle engines the label should include the idle speed, ignition timing, and the idle air-fuel mixture setting procedure and value (e.g., idle CO, idle air-fuel ratio, idle speed drop), and value lash;

(G) For diesel engines the label should include the advertised hp at rpm, fuel rate at advertised hp in mm^3/stroke, valve lash, initial injection timing, and idle speed;

(H) The prominent statement: ''This engine conforms to U.S. EPA regulations applicable to 19___ Model Year New Heavy-Duty Engines.'';

(I) If the manufacturer is provided with an alternate useful life period under the provisions of § 86.901–21(f), the prominent statement: ''This engine has been certified to meet U.S. EPA standards for a useful-life period of _____ miles or _____ hours of operation, whichever occurs first. This engine's actual life may vary depending on its service application.'' The manufacturer may alter this statement only to express the assigned alternate useful life in terms other than miles or hours (e.g., years, or hours only);

(J) For diesel engines. The prominent statement: ''This engine has a primary intended service application as a _____ heavy-duty engine.'' (The primary intended service applications are light, medium, and heavy, as defined in § 86.902–2.);

(K) For Otto-cycle engines. One of the following statements, as applicable:

(*1*) For engines certified to the emission standards under § 86.09–-10(a)(1) (i) or (iii), the statement: ''This engine is certified for use in all heavy-duty vehicles.'';

(*2*) For gasoline-fueled engines certified under the provisions of § 86.091–10(a)(3)(i), the statement: ''This engine is certified for use in all heavy-duty vehicles under the special provision of 40 CFR 86.091–10(a)(3)(i).'';

(*3*) For engines certified to the emission standards under § 86.091–10(a)(1) (ii) or (iv), the statement: ''This engine is certified for use only in heavy-duty vehicles with a gross vehicle weight rating above 14,000 lbs.'';

(L) For all heavy-duty engines which are included in diesel heavy-duty particulate trading, banking or averaging programs, the particulate family emission limit to which the engine is certified;

(M) For all heavy-duty engines which are included in NO_X trading, banking or averaging programs, the NO_X family emission limit to which the engine is certified;

(N) Engines granted final admission under § 85.1505 must comply with the labeling requirements contained in § 85.1510; and

(O) For diesel engines which have been certified to comply with the particulate standard of 40 CFR 86.093–11(a)(1)(iv)(A), the statement ''This engine is certified for use in a bus as defined at 40 CFR 86.093–2.'' Unless waived by the Administrator on the basis of impracticality, for diesel engines not certified to comply with the particulate standard 40 CFR 86.093–11(a)(1)(iv)(A), the statement ''This engine is not certified for use in a bus as defined at 40 CFR 86.093–2. Sales of this engine for use in a bus is a violation of Federal law under the Clean Air Act.''

(iv) The label may be made up of one or more pieces: Provided, That all pieces are permanently attached to the same engine or vehicle part as applicable.

(4) *Gasoline-fueled and methanol-fueled heavy-duty vehicles.* (i) A permanent, legible label shall be affixed in a readily visible position in the engine compartment. If such vehicles do not have an engine compartment, the label required in paragraphs (a)(4) and (g)(1) of this section shall be affixed in a readily visible position on the operator's enclosure or on the engine.

(ii) The label shall be affixed by the vehicle manufacturer who has been issued the certificate of conformity for such vehicle, in such a manner that it cannot be removed without destroying

or defacing the label. The label shall not be affixed to any equipment which is easily detached from such vehicle.

(iii) The label shall contain the following information lettered in the English language in block letters and numerals, which shall be of a color that contrasts with the background of the label:

(A) The label heading: Vehicle Emission Control Information;

(B) Full corporate name and trademark of manufacturer;

(C) Evaporative family identification;

(D) The maximum nominal fuel tank capacity (in gallons) for which the evaporative control system is certified; and

(E) One of the following, as appropriate:

(*1*) An unconditional statement of compliance with the appropriate model year U.S. Environmental Protection Agency regulations (40 CFR part 86) which apply to gasoline-fueled heavy-duty vehicles;

(*2*) An unconditional statement of compliance with the appropriate model year U.S. Environmental Protection Agency regulations (40 CFR part 86) which apply to methanol-fueled heavy-duty vehicles;

(F) Vehicles granted final admission under § 85.1505 of this chapter must comply with the labeling requirements contained in § 85.1510 of this chapter.

(b) The provisions of this section shall not prevent a manufacturer from also reciting on the label that such vehicle (or engine) conforms to any applicable state emission standards for new motor vehicles (or new motor vehicle engines) or any other information that such manufacturer deems necessary for, or useful to, the proper operation and satisfactory maintenance of the vehicle (or engine).

(c)(1) The manufacturer of any light-duty vehicle or light-duty truck subject to the emission standards (or family emission limits, as appropriate) of this subpart shall, in addition and subsequent to setting forth those statements on the label required by the Department of Transportation (DOT) pursuant to 49 CFR 567.4, set forth on the DOT label or an additional label located in proximity to the DOT label and affixed as described in 40 CFR 567.4(b), the following information in the English language, lettered in block letters and numerals not less than three thirty-seconds of an inch high, of a color that contrasts with the background of the label:

(i) The heading: ''Vehicle Emission Control Information.''

(ii)(A) For light-duty vehicles, The statement: ''This Vehicle Conforms to U.S. EPA Regulations Applicable to 19____ Model Year New Motor Vehicles.''

(B) For light-duty trucks:

(*1*) The statement: ''This vehicle conforms to U.S. EPA regulations applicable to 19____ Model Year New Light-Duty Trucks.''

(*2*) If the manufacturer is provided an alternate useful life period under the provisions of § 86.091–21(f), the prominent statement: ''This vehicle has been certified to meet U.S. EPA standards for a useful-life period of ____ years or _____ miles of operation, whichever occurs first. This vehicle's actual life may vary depending on its service application.'' The manufacturer may alter this statement only to express the assigned alternate useful life in terms other than years or miles (e.g., hours, or miles only).

(iii) One of the following statements, as applicable, in letters and numerals not less than six thirty-seconds of an inch high and of a color that contrasts with the background of the label:

(A) For all vehicles certified as non-catalyst-equipped: ''Non-Catalyst''.

(B) For all vehicles certified as catalyst-equipped which are included in a manufacturer's catalyst control program for which approval has been given by the Administrator: ''Catalyst—Approved for Import''.

(C) For all vehicles certified as catalyst-equipped which are not included in a manufacturer's catalyst control program for which prior approval has been given by the Administrator: ''Catalyst''.

(2) In lieu of selecting either of the labeling options of paragraph (c)(1) of this section, the manufacturer may add the information required by paragraph (c)(1)(iii) of this section to the label required by paragraph (a) of this section. The required information will be set

forth in the manner prescribed by paragraph (c)(1)(iii) of this section.

(d) Incomplete light-duty trucks or incomplete heavy-duty vehicles optionally certified in accordance with the light-duty truck provisions shall have one of the following prominent statements, as applicable, printed on the label required by paragraph (a)(2) of this section in lieu of the statement required by paragraph (a)(2)(iii)(E) of this section.

(1) Light-duty trucks. (i) Labels for light-duty trucks certified to the oxides of nitrogen standard of 1.2 grams per vehicle mile shall include the following statement: ''This vehicle conforms to U.S. EPA regulations applicable to 19___ Model Year New Light-Duty Trucks when it does not exceed ____ pounds in curb weight, ____ pounds in gross vehicle weight rating, and ____ square feet in frontal area.''

(ii) Labels for light-duty trucks certified to the oxides of nitrogen standards of 1.7 grams per vehicle mile shall include the following statement: ''This vehicle conforms to U.S. EPA regulations applicable to 19___ Model Year New Light-Duty Trucks when it is between 3,450 pounds and ____ pounds in curb weight and it does not exceed ____ pounds in gross vehicle weight rating nor ____ square feet in frontal area.''

(2) Heavy-duty vehicles optionally certified in accordance with the light-duty truck provisions. ''This heavy-duty vehicle conforms to the U.S. EPA regulations applicable to 19___ Model Year Light-Duty Trucks under the special provision of 40 CFR 86.085–1(b) when it does not exceed ____ pounds in curb weight, ____ pounds in gross vehicle weight rating, and ____ square feet in frontal area.''

(e) Incomplete heavy-duty vehicles having a gross vehicle weight rating of 8,500 pounds or less shall have one of the following statements printed on the label required by paragraph (a)(3) of this section in lieu of the statement required by paragraph (a)(3)(iii)(H) of this section: ''This engine conforms to U.S. EPA regulations applicable to 19___ Model Year Heavy-Duty Engines when installed in a vehicle completed at a curb weight of more than 6,000 pounds or with a frontal area of greater than 45 square feet.''

(f) The manufacturer of any incomplete light-duty vehicle or light-duty truck shall notify the purchaser of such vehicle of any curb weight, frontal area, or gross vehicle weight rating limitations affecting the emission certificate applicable to that vehicle. This notification shall be transmitted in a manner consistent with National Highway Traffic Safety Administration safety notification requirements published in 49 CFR part 568.

(g)(1)(i) Incomplete gasoline-fueled heavy-duty vehicles shall have the following prominent statement printed on the label required in paragraph (a)(4) of this section: ''(Manufacturer's corporate name) has determined that this vehicle conforms to U.S. EPA regulations applicable to 19___ Model Year New Gasoline-Fueled Heavy-Duty Vehicles when completed with a nominal fuel tank capacity not to exceed _____ gallons. Persons wishing to add fuel tank capacity beyond the above maximum must submit a written statement to the Administrator that the hydrocarbon storage system has been upgraded according to the requirements of 40 CFR 86.092–35(g)(2).''

(ii) Incomplete methanol-fueled heavy-duty vehicles shall have the following prominent statement printed on the label required in paragraph (a)(4) of this section: ''(Manufacturer's corporate name) has determined that this vehicle conforms to U.S. EPA regulations applicable to 19___ Model Year New Methanol-Fueled Heavy-Duty Vehicles when completed with a nominal fuel tank capacity not to exceed _____ gallons. Persons wishing to add fuel tank capacity beyond the above maximum must submit a written statement to the Administrator that the hydrocarbon storage system has been upgraded according to the requirements of 40 CFR 86.091–35(g)(2).''

(2) Persons wishing to add fuel tank capacity beyond the maximum specified on the label required in paragraph (g)(1) of this section shall:

(i) Increase the amount of fuel tank vapor storage material according to the following function:

$$\mathrm{Cap_f} = \mathrm{Cap_i}\left(\frac{\text{T. Vol.}}{\text{Max. Vol.}}\right)$$

Where:

Capf=final amount of fuel tank vapor storage material, grams.

Capi=initial amount of fuel tank vapor storage material, grams.

T. Vol.=total fuel tank volume of completed vehicle, gallons.

Max. Vol.=maximum fuel tank volume as specified on the label required in paragraph (g)(1) of this section, gallons.

(ii) Use, if applicable, hosing for fuel vapor routing which is at least as impermeable to hydrocarbon vapors as that used by the primary manufacturer.

(iii) Use vapor storage material with the same absorptive characteristics as that used by the primary manufacturer.

(iv) Connect, if applicable, any new hydrocarbon storage device to the existing hydrocarbon storage device in series such that the original hydrocarbon storage device is situated between the fuel tank and the new hydrocarbon storage device. The original hydrocarbon storage device shall be sealed such that vapors cannot reach the atmosphere. The elevation of the original hydrocarbon storage device shall be equal to or lower than the new hydrocarbon storage device.

(v) Submit a written statement to the Administrator that paragraphs (g)(2)(i) through (g)(2)(iv) of this section have been complied with.

(3) If applicable, the Administrator will send a return letter verifying the receipt of the written statement required in paragraph (g)(2)(v) of this section.

(h)(1) Light-duty trucks and heavy-duty vehicles and engines for which nonconformance penalties are to be paid in accordance with § 86.1113–87(b) shall have the following information printed on the label required in paragraph (a) of this section. The manufacturer shall begin labeling production engines or vehicles within 10 days after the completion of the PCA.

(i) The statement: ''The manufacturer of this engine/vehicle will pay a nonconformance penalty to be allowed to introduce it into commerce at an emission level higher than the applicable emission standard. The compliance level (or new emission standard) for this engine/vehicle is _____.'' (The manufacturer shall insert the applicable pollutant and compliance level calculated in accordance with § 86.1112–87(a).)

(ii) [Reserved]

(2) If a manufacturer introduces an engine or vehicle into commerce prior to the compliance level determination of § 86.1112–87(a), it shall provide the engine or vehicle owner with a label as described in paragraph (h) of this section to be affixed in a location in proximity to the label required in paragraph (a) of this section within 30 days of the completion of the PCA.

[58 FR 15795, Mar. 24, 1993]

§ 86.094–1 General applicability.

(a) The provisions of this subpart generally apply to 1994 and later model year new Otto-cycle and diesel-cycle light-duty vehicles, 1994 and later model year new Otto-cycle and diesel-cycle light-duty trucks, and 1994 and later model year new Otto-cycle and diesel-cycle heavy-duty engines. In cases where a provision applies only to a certain vehicle group based on its model year, vehicle class, motor fuel, engine type, or other distinguishing characteristics, the limited applicability is cited in the appropriate section or paragraph.

(b) *Optional applicability*. A manufacturer may request to certify any heavy-duty vehicle of 10,000 pounds Gross Vehicle Weight Rating or less in accordance with the light-duty truck provisions. Heavy-duty engine or vehicle provisions do not apply to such a vehicle.

(c)–(d) [Reserved]

(e) *Small volume manufacturers*. Special certification procedures are available for any manufacturer whose projected combined U.S. sales of light-duty vehicles, light-duty trucks, heavy-duty vehicles, and heavy-duty engines in its product line (including all vehicles and engines imported under the provisions of §§ 85.1505 and 85.1509 of this chapter are fewer than 10,000 units for the model year in which the manufacturer seeks certification. To certify its product line under these optional procedures, the small-volume manufacturer must first obtain the Administrator's approval. The manufacturer must meet the eligibility criteria

specified in § 86.092–14(b) before the Administrator's approval will be granted. The small-volume manufacturer's certification procedures are described in § 86.092–14.

(f) *Optional procedures for determining exhaust opacity*. (1) The provisions of subpart I of this part apply to tests which are performed by the Administrator, and optionally, by the manufacturer.

(2) Measurement procedures, other than that described in subpart I of this part, may be used by the manufacturer provided the manufacturer satisfies the requirements of § 86.091–23(f).

(3) When a manufacturer chooses to use an alternative measurement procedure it has the responsibility to determine whether the results obtained by the procedure will correlate with the results which would be obtained from the measurement procedure in subpart I of this part. Consequently, the Administrator will not routinely approve or disapprove any alternative opacity measurement procedure or any associated correlation data which the manufacturer elects to use to satisfy the data requirements for subpart I of this part.

(4) If a confirmatory test(s) is performed and the results indicate there is a systematic problem suggesting that the data generated under an optional alternative measurement procedure do not adequately correlate with data obtained in accordance with the procedures described in subpart I of this part, EPA may require that all certificates of conformity not already issued be based on data obtained from procedures described in subpart I of this part.

[58 FR 4002, Jan. 12, 1993]

§ 86.094–2 Definitions.

The definitions of § 86.093–2 remain effective. The definitions listed in this section are effective beginning with the 1994 model year.

Adjusted Loaded Vehicle Weight means the numerical average of vehicle curb weight and GVWR.

Bi-directional control means the capability of a diagnostic tool to send messages on the data bus that temporarily overrides the module's control over a sensor or actuator and gives control to the diagnostic tool operator. Bi-directional controls do not create permanent changes to engine or component calibrations.

Data stream information means information (i.e., messages and parameters) originated within the vehicle by a module or intelligent sensors (i.e., a sensor that contains and is controlled by its own module) and transmitted between a network of modules and/or intelligent sensors connected in parallel with either one or two communication wires. The information is broadcast over the communication wires for use by other modules (e.g., chassis, transmission, etc.) to conduct normal vehicle operation or for use by diagnostic tools. Data stream information does not include engine calibration related information.

Defeat device means an auxilary emission control device (AECD) that reduces the effectiveness of the emission control system under conditions which may reasonably be expected to be encountered in normal vehicle operation and use, unless:

(1) Such conditions are substantially included in the Federal emission test procedure;

(2) The need for the AECD is justified in terms of protecting the vehicle against damage or accident; or

(3) The AECD does not go beyond the requirements of engine starting.

Durability useful life means the highest useful life mileage out of the set of all useful life mileages that apply to a given vehicle. The durability useful life determines the duration of service accumulation on a durability data vehicle. The determination of durability useful life shall reflect any alternative useful life mileages approved by the Administrator under § 86.094–21(f). The determination of durability useful life shall exclude any standard and related useful life mileage for which the manufacturer has obtained a waiver of emission data submission requirements under § 86.094–23(c)

Element of design means any control system (i.e., computer software, electronic control system, emission control system, computer logic), and/or control system calibrations, and/or the results

of systems interaction, and/or hardware items on a motor vehicle or motor vehicle engine.

Engine warm-up cycle means sufficient vehicle operation such that the coolant temperature has risen by at least 40 °F from engine starting and reaches a minimum temperature of 160 °F.

Enhanced service and repair information means information which is specific for an original equipment manufacturer's brand of tools and equipment.

Equivalent test weight means the weight, within an inertia weight class, which is used in the dynamometer testing of a vehicle and which is based on its loaded vehicle weight or adjusted loaded vehicle weight in accordance with the provisions of subparts A and B of this part.

Gaseous fuel means natural gas or liquefied petroleum gas.

Generic service and repair information means information which is not specific for an original equipment manufacturer's brand of tools and equipment.

Heavy light-duty truck means any light-duty truck rated greater than 6000 lbs GVWR.

Indirect information means any information that is not specifically contained in the service literature, but is contained in items such as tools or equipment provided to franchised dealers (or others).

Intermediary means any individual or entity, other than an original equipment manufacturer, which provides service or equipment to automotive technicians.

Intermediate Temperature Cold Testing means testing done pursuant to the driving cycle and testing conditions contained in 40 CFR part 86, subpart C, at temperatures between 25 °F (−4 °C) and 68 °F (20 °C).

Light-duty truck 1 means any light light-duty truck up through 3750 lbs loaded vehicle weight.

Light-duty truck 2 means any light light-duty truck greater than 3750 lbs loaded vehicle weight.

Light-duty truck 3 means any heavy light-duty truck up through 5750 lbs adjusted loaded vehicle weight.

Light-duty truck 4 means any heavy light-duty truck greater than 5750 lbs adjusted loaded vehicle weight.

Light light-duty truck means any light-duty truck rated up through 6000 lbs GVWR.

Liquefied petroleum gas means a liquid hydrocarbon fuel that is stored under pressure and is composed primarily of species that are gases at atmospheric conditions (temperature = 25 °C and pressure = 1 atm), excluding natural gas.

Multi-fuel means capable of operating on two or more different fuel types, either separately or simultaneously.

Natural gas means a fuel whose primary constituent is methane.

Non-Methane Hydrocarbon Equivalent means the sum of the carbon mass emissions of non-oxygenated non-methane hydrocarbons, methanol, formaldehyde, or other organic compounds that are separately measured, expressed as gasoline-fueled vehicle hydrocarbons. In the case of exhaust emissions, the hydrogen-to-carbon ratio of the equivalent hydrocarbon is 1.85:1. In the case of diurnal and hot soak emissions, the hydrogen-to-carbon ratios of the equivalent hydrocarbons are 2.33:1 and 2.2:1, respectively.

Petroleum fuel means liquid fuels normally derived from crude oil, excluding liquefied petroleum gas. Gasoline and diesel fuel are petroleum fuels.

Test weight basis means the basis on which equivalent test weight is determined in accordance with § 86.129–94 of subpart B of this part.

Useful life means:

(a) For light-duty vehicles, and for model year 1994 and later light light-duty trucks not subject to the Tier 0 standards of paragraph (a) of § 86.094–9, intermediate useful life and/or full useful life. Intermediate useful life is a period of use of 5 years or 50,000 miles, whichever occurs first. Full useful life is a period of use of 10 years or 100,000 miles, whichever occurs first, except as otherwise noted in § 86.094–9.

(b) For light light-duty trucks subject to the Tier 0 standards of paragraph (a) of § 86.094–9, and for heavy light-duty truck engine families, intermediate and/or full useful life. Intermediate useful life is a period of use of

5 years or 50,000 miles, whichever occurs first. Full useful life is a period of use of 11 years or 120,000 miles, whichever occurs first.

(c) For an Otto-cycle heavy-duty engine family, a period of use of 8 years or 110,000 miles, whichever first occurs.

(d) For a diesel heavy-duty engine family:

(1) For light heavy-duty diesel engines, period of use of 8 years or 110,000 miles, whichever first occurs.

(2) For medium heavy-duty diesel engines, a period of use of 8 years or 185,000 miles, whichever first occurs.

(3) For heavy-duty diesel engines, a period of use of 8 years or 290,000 miles, whichever first occurs, except as provided in paragraph (d)(4) of this definition.

(4) for heavy heavy-duty diesel engines used in urban buses, for the particulate standard, a period of use of 10 years or 290,000 miles, whichever first occurs.

(e) As an option for both light-duty trucks under certain conditions and heavy-duty engine families, an alternative useful life period assigned by the Administrator under the provisions of paragraph (f) of § 86.094–21.

(f) The useful-life period for purposes of the emissions defect warranty and emissions performance warranty shall be a period of 5 years/50,000 miles, whichever first occurs, for light-duty trucks, Otto-cycle heavy-duty engines and light heavy-duty diesel engines. For all other heavy-duty diesel engines the aforementioned period is 5 years/100,000 miles, whichever first occurs. However, in no case may this period be less than the manufacturer's basic mechanical warranty period for the engine family.

[56 FR 25739, June 5, 1991, as amended at 57 FR 31897, July 17, 1992; 58 FR 4002, Jan. 12, 1993; 58 FR 9485, Feb. 19, 1993; 58 FR 15799, Mar. 24, 1993; 59 FR 48494, Sept. 21, 1994; 60 FR 34335, June 30, 1995; 60 FR 40496, Aug. 9, 1995]

§ 86.094–3 Abbreviations.

(a) The abbreviations in § 86.090–3 remain effective. The abbreviations in this section apply beginning with the 1994 model year.

(b) The abbreviations in this section apply to this subpart, and also to subparts B, E, F, H, M, N and P of this part, and have the following meanings:

ALVW—Adjusted Loaded Vehicle Weight
LPG—Liquefied Petroleum Gas
NMHC—Nonmethane Hydrocarbons
NMHCE—Non-Methane Hydrocarbon Equivalent
PM—Particulate Matter
THC—Total Hydrocarbons

[56 FR 25740, June 5, 1991, as amended at 58 FR 33208, June 16, 1993; 59 FR 48494, Sept. 21, 1994; 60 FR 34335, June 30, 1995]

§ 86.094–7 Maintenance of records; submittal of information; right of entry.

Section 86.094–7 includes text that specifies requirements that differ from § 86.091–7. Where a paragraph in § 86.091–7 is identical and applicable to § 86.094–7, this may be indicated by specifying the corresponding paragraph and the statement ''[Reserved]. For guidance see § 86.091–7.'' Where a corresponding paragraph of § 86.091–7 is not applicable, this is indicated by the statement ''[Reserved].''

(a) Introductory text through (a)(2) [Reserved]. For guidance see § 86.091–7.

(a)(3) All records, other than routine emission test records, required to be maintained under this subpart shall be retained by the manufacturer for a period of eight (8) years after issuance of all certificates of conformity to which they relate. Routine emission test records shall be retained by the manufacturer for a period of one (1) year after issuance of all certificates of conformity to which they relate. Records may be retained as hard copy or reduced to microfilm, punch cards, etc., depending on the record retention procedures of the manufacturer, provided, that in every case all the information contained in the hard copy shall be retained.

(b)–(c)(2) [Reserved]. For guidance see § 86.091–7.

(c)(3) The manufacturer (or contractor for the manufacturer, if applicable) shall retain all records required to be maintained under this section for a period of eight (8) years from the due date for the end-of-model year averaging, trading, and banking reports. Records may be retained as hard copy or reduced to microfilm, ADP files, etc., depending on the manufacturer's record retention procedure, provided

that in every case all the information contained in the hard copy is retained.

(c)(4)–(d)(1)(v) [Reserved]. For guidance see § 86.091–7.

(d)(1)(vi) Any facility where any record or other document relating to the information specified in paragraph (h) of this section is located.

(2) Upon admission to any facility referred to in paragraph (d)(1) of this section, any EPA Enforcement Officer or any EPA authorized representative shall be allowed:

(i) To inspect and monitor any part or aspect of such procedures, activities, and testing facilities, including, but not limited to, monitoring vehicle (or engine) preconditioning, emissions tests and mileage (or service) accumulation, maintenance, and vehicle soak and storage procedures (or engine storage procedures), and to verify correlation or calibration of test equipment;

(ii) To inspect and make copies of any such records, designs, or other documents, including those records specified in § 86.091–7(c); and

(iii) To inspect and make copies of any such records, designs or other documents including those records specified in paragraph (h) of this section; and

(iv) To inspect and/or photograph any part or aspect of any such certification vehicle (or certification engine) and any components to be used in the construction thereof.

(d)(3)–(g) [Reserved]. For guidance see § 86.091–7.

(h)(1) The manufacturer (or contractor for the manufacturer, if applicable) of any model year 1994 through 1997 light-duty vehicle or light light-duty truck or model year 1994 through 1998 heavy light-duty truck that is certified shall establish, maintain, and retain the following adequately organized and indexed records for each such vehicle:

(i) EPA engine family;

(ii) Vehicle identification number;

(iii) Model year and production date;

(iv) Shipment date;

(v) Purchaser; and

(vi) Purchase contract.

(2) In addition, the manufacturer (or contractor for the manufacturer, if applicable) of each certified engine family shall establish, maintain, and retain adequately organized records of the actual U.S. sales volume for the model year for each engine family. The manufacturer may petition the Administrator to allow actual volume produced for U.S. sale to be used in lieu of actual U.S. sales. Such petition shall be submitted within 30 days of the end of the model year to the Manufacturer Operations Division. For the petition to be granted, the manufacturer must establish to the satisfaction of the Administrator that actual production volume is functionally equivalent to actual sales volume.

(3) The manufacturer (or contractor for the manufacturer, if applicable) shall retain all records required to be maintained under this section for a period of eight (8) years from the due date for the applicable end-of-model year report. Records may be retained as hard copy or reduced to microfilm, ADP film, etc., depending on the manufacturer's record retention procedure, provided that in every case all the information contained in the hard copy is retained.

(4) Nothing in this section limits the Administrator's discretion in requiring the manufacturer to retain additional records or submit information not specifically required by this section.

(5) Pursuant to a request made by the Administrator, the manufacturer shall submit to him the information that is required to be retained.

(6) *Voiding a certificate.* (i) EPA may void ab initio a certificate for a vehicle certified to Tier 0 certification standards for which the manufacturer fails to retain the records required in this section or to provide such information to the Administrator upon request.

(ii) EPA may void ab initio a certificate for a 1994 or 1995 model year light-duty vehicle or light-duty truck that is not certified in compliance with the cold temperature CO standard for which the manufacturer fails to retain the records required in this section or to provide such information to the Administrator upon request.

(iii) Any voiding ab initio of a certificate under § 86.094–7(c) and paragraph (h) of this section will be made only after the manufacturer concerned has been offered an opportunity for a hearing conducted in accordance with

§ 86.614 for light-duty vehicles or under § 86.1014 for light-duty trucks and heavy-duty engines.

(i) Any voiding ab initio of a certificate under § 86.091–7 (c) and paragraph (h) of this section will be made only after the manufacturer concerned has been offered an opportunity for a hearing conducted in accordance with § 86.614 for light-duty vehicles or under § 86.1014 for light-duty trucks and heavy-duty engines.

[56 FR 25740, June 5, 1991, as amended at 57 FR 31897, July 17, 1992]

§ 86.094–8 Emission standards for 1994 and later model year light-duty vehicles.

Section 86.094–8 includes text that specifies requirements that differ from § 86.090–8. Where a paragraph in § 86.090–8 is identical and applicable to § 86.094–8, this may be indicated by specifying the corresponding paragraph and the statement ''[Reserved]. For guidance see § 86.090–8.'' Where a corresponding paragraph of § 86.090–8 is not applicable, this is indicated by the statement ''[Reserved].''

(a)(1) *Standards.* (i) Exhaust emissions from 1994 and later model year vehicles (optional for 1994 through 1996 model year gaseous-fueled vehicles) shall meet all standards in tables A94–2, A94–3, A94–5 and A94–6 in the rows designated with the applicable fuel type, according to the implementation schedule in tables A94–1 and A94–4, as follows:

(A)(*1*)(*i*) A minimum of the percentage shown in table A94–1 of a manufacturer's sales of the applicable model year's light-duty vehicles shall not exceed the applicable Tier 1 standards in table A94–2 and shall not exceed the applicable Tier 1 standards in table A94–3. The remaining vehicles shall not exceed the applicable Tier 0 standards in table A94–2.

(*ii*) Optionally, a minimum of the percentage shown in table A94–1 of a manufacturer's combined sales of the applicable model year's light-duty vehicles and light light-duty trucks shall not exceed the applicable Tier 1 standards. Under this option, the light-duty vehicles shall not exceed the applicable Tier 1 standards in table A94–2 and shall not exceed the applicable Tier 1 standards in table A94–3. Further, the light light-duty trucks shall not exceed the applicable Tier 1 standards in table A94–8 of § 86.094–9 and shall not exceed the applicable Tier 1 standards of table A94–9 of § 86.094–9. The remaining percentage of the manufacturer's combined sales of the applicable model year's light-duty vehicles and light light-duty trucks shall not exceed the corresponding Tier 0 standards.

(*2*) A minimum of the percentage shown in table A94–4 of a manufacturer's sales of the applicable model year's light-duty vehicles shall not exceed the applicable Tier 1 standards in table A94–5 and shall not exceed the applicable Tier 1 standards in table A94–6. The remaining vehicles shall not exceed the applicable Tier 0 standards in table A94–5.

TABLE A94–1—IMPLEMENTATION SCHEDULE FOR LIGHT-DUTY VEHICLES FOR HCS, CO AND NO_X

Model year	Tier 1 percentage
1994	40
1995	80
After 1995	100

TABLE A94–2—INTERMEDIATE USEFUL LIFE STANDARDS (G/MI) FOR LIGHT-DUTY VEHICLES FOR HCS, CO AND NO_X

Fuel	Standards	THC	NMHC	THCE	NMHCE	CO	NO_X
Gasoline	Tier 0	0.41				3.4	1.0
Gasoline	Tier 1	0.41	0.25			3.4	0.4
Diesel	Tier 0	0.41				3.4	1.0
Diesel	Tier 1	0.41	0.25			3.4	1.0
Methanol	Tier 0			0.41		3.4	1.0
Methanol	Tier 1			0.41	0.25	3.4	0.4
Natural Gas	Tier 0		0.34			3.4	1.0

TABLE A94–2—INTERMEDIATE USEFUL LIFE STANDARDS (G/MI) FOR LIGHT-DUTY VEHICLES FOR HCS, CO AND NO_X—Continued

Fuel	Standards	THC	NMHC	THCE	NMHCE	CO	NO_X
Natural Gas	Tier 1		0.25			3.4	0.4
LPG	Tier 0	0.41				3.4	1.0
LPG	Tier 1	0.41	0.25			3.4	0.4

TABLE A94–3—FULL USEFUL LIFE STANDARDS (G/MI) FOR LIGHT-DUTY VEHICLES FOR HCS, CO AND NO_X

Fuel	Standards	THC	NMHC	THCE	NMHCE	CO	NO_X
Gasoline	Tier 0						
Gasoline	Tier 1		0.31			4.2	0.6
Diesel	Tier 0						
Diesel	Tier 1		0.31			4.2	1.25
Methanol	Tier 0						
Methanol	Tier 1				0.31	4.2	0.6
Natural Gas	Tier 0						
Natural Gas	Tier 1		0.31			4.2	0.6
LPG	Tier 0						
LPG	Tier 1		0.31			4.2	0.6

TABLE A94–4—IMPLEMENTATION SCHEDULE FOR LIGHT-DUTY VEHICLES FOR PM

Model year	Tier 1 percentage
1994	40
1995	80
After 1995	100

TABLE A94–5—INTERMEDIATE USEFUL LIFE STANDARDS (G/MI) FOR LIGHT-DUTY VEHICLES FOR PM

Fuel	Standards	PM
Gasoline	Tier 0	
Gasoline	Tier 1	0.08
Diesel	Tier 0	0.20
Diesel	Tier 1	0.08
Methanol	Tier 0	[1] 0.20
Methanol	Tier 1	0.08
Natural Gas	Tier 0	[1] 0.20
Natural Gas	Tier 1	0.08
LPG	Tier 0	[1] 0.20
LPG	Tier 1	0.08

[1] Applicable only to diesel-cycle vehicles.

TABLE A94–6—FULL USEFUL LIFE STANDARDS (G/MI) FOR LIGHT-DUTY VEHICLES FOR PM

Fuel	Standards	PM
Gasoline	Tier 0	
Gasoline	Tier 1	0.10
Diesel	Tier 0	
Diesel	Tier 1	0.10
Methanol	Tier 0	
Methanol	Tier 1	0.10
Natural Gas	Tier 0	
Natural Gas	Tier 1	0.10
LPG	Tier 0	
LPG	Tier 1	0.10

(B)(*1*)(*i*) Sales percentages for the purposes of determining compliance with paragraph (a)(1)(i)(A) of this section shall be based on total actual U.S. sales of light-duty vehicles of the applicable model year by a manufacturer

to a dealer, distributor, fleet operator, broker, or any other entity which comprises the point of first sale. If the option of paragraph (a)(1)(i)(A)(*1*)(*ii*) of this section is taken, such sales percentages shall be based on the total actual combined U.S. sales of light-duty vehicles and light light-duty trucks of the applicable model year by a manufacturer to a dealer, distributor, fleet operator, broker, or any other entity which comprises the point of first sale.

(*ii*) The manufacturer may petition the Administrator to allow actual volume produced for U.S. sale to be used in lieu of actual U.S. sales for purposes of determining compliance with the implementation schedule sales percentages of tables A94–1 and A94–4 of this section. Such petition shall be submitted within 30 days of the end of the model year to the Manufacturers Operations Division. For the petition to be granted, the manufacturer must establish to the satisfaction of the Administrator that actual production volume is functionally equivalent to actual sales volume.

(*iii*) The manufacturer may count toward the sales percentages light-duty vehicles of the applicable model year that meet certain standards for that same model year contained in Title 13, California Code of Regulations, Section 1960.1, and the incorporated ''California Exhaust Emission Standards and Test Procedures for 1988 and Subsequent Model Passenger Cars, Light-Duty Trucks, and Medium-Duty Vehicles.'' (Copies may be obtained from Barclays Law Publishers, P.O. Box 3066, San Francisco, CA 94080.) The relevant standards from that source are those that are designated as phase-in standards for selected pollutants and were first applied in the 1993 model year, as well as those for all remaining pollutants that require compliance at the one hundred percent level. If this option is taken, all light-duty vehicles sold in jurisdictions adopting such standards shall be counted toward the total upon which the sales percentage is based. If this option is not taken, light-duty vehicles sold in such jurisdictions are to be excluded from counting toward either the total upon which the sales percentage is based or the sales percentage itself.

(*iv*) Small volume manufacturers, as defined in § 86.092–14 (b)(1) and (2), are exempt from the implementation schedules of tables A94–1 and A94–4 of this section for model years 1994 and 1995. For small volume manufacturers, Tier 0 standards of tables A94–2 and A94–5 continue to apply until model year 1996 when one hundred percent compliance with the Tier 1 standards of tables A94–2, A94–3, A94–5, and A94–6 is required. This exemption does not apply to small volume engine families as defined in § 86.092–14 (b)(5).

(*2*)(*i*) Where the required implementation schedule sales percentages for in-use purposes, as prescribed in subpart H of this part, are the same in a given model year as the required implementation schedule sales percentages for certification purposes, as prescribed in this section, the same engine families must comprise the respective percentages.

(*ii*) Where the required implementation schedule sales percentages for in-use purposes differ from implementation schedule sales percentages for certification purposes in a particular model year, the manufacturer must designate, at the time of Application for Certification, which families will meet each applicable in-use phase-in percentage.

(*3*) The manufacturer must state at the time of Application for Certification, based on projected U.S. sales or projected production for U.S. sale, which families will be used to attain the required implementation schedule sales percentages for certification purposes.

(*4*) A manufacturer can not use one set of engine families to meet its intermediate useful life standards and another to meet its full useful life standards. The same families which are used to meet the intermediate useful life standards will be required without deviation to meet the corresponding full useful life standards.

(ii) A manufacturer may elect to include all or some of its diesel-cycle light-duty vehicle engine families subject to the Tier 0 standards in the appropriate particulate averaging program (petroleum or methanol), provided that vehicles produced for sale in

California or in designated high-altitude areas may be averaged only within each of these areas. Averaging is not permitted between fuel types. If the manufacturer elects to average light-duty vehicles and light-duty trucks together in the appropriate particulate averaging program, its composite particulate standard applies to the combined set of light-duty vehicles and light-duty trucks included in the average and is calculated as defined in § 86.090–2.

(2) The standards set forth in paragraph (a)(1)(i) of this section refer to the exhaust emitted over a driving schedule as set forth in subpart B of this part and measured and calculated in accordance with those procedures. The test weight basis for light-duty vehicles, for the purposes of determining equivalent test weight as prescribed in § 86.129–94, shall be loaded vehicle weight.

(b) Fuel evaporative emissions from 1994 and later model year light-duty vehicles shall not exceed (compliance with these standards is optional for 1994 model year methanol-fueled engines):

(1) *Hydrocarbons (for gasoline-fueled vehicles).* 2.0 grams per test.

(2) *Total Hydrocarbon Equivalent (for methanol-fueled vehicles).* 2.0 grams carbon per test.

(3) The standards set forth in paragraphs (b) (1) and (2) of this section refers to a composite sample of the fuel evaporative emissions collected under the conditions set forth in subpart B of this part and measured in accordance with those procedures.

(c) No crankcase emissions shall be discharged into the ambient atmosphere from any 1994 and later model year Otto-cycle, or methanol-or gaseous-fueled diesel light-duty vehicle. This requirement is optional for 1994 through 1996 model year gaseous-fueled light-duty vehicles.

(d)–(f) [Reserved]. For guidance see § 86.090–8.

(g) Any 1994 and later model year light-duty vehicle that a manufacturer wishes to certify for sale shall meet the emission standards under both low- and high-altitude conditions as specified in § 86.082–2, except as provided in paragraphs (h) and (i) of this section. Vehicles shall meet emission standards under both low- and high-altitude conditions without manual adjustments or modifications. Any emission control device used to meet emission standards under high-altitude conditions shall initially actuate (automatically) no higher than 4,000 feet above sea level.

(h) The manufacturer may exempt 1994 and later model year vehicles from compliance at high altitude with the emission standards set forth in paragraphs (a) and (b) of this section if the vehicles are not intended for sale at high altitude and if the requirements of paragraphs (h) (1) and (2) of this section are met.

(1) A vehicle configuration shall only be considered eligible for exemption under paragraph (h) of this section if the requirements of either paragraph (h)(1) (i), (ii), (iii), or (iv) of this section are met.

(i) Its design parameters (displacement-to-weight ratio (D/W) and engine speed-to-vehicle-speed ratio (N/V)) fall within the exempted range for that manufacturer for that year. The exempted range is determined according to the following procedure:

(A) The manufacturer shall graphically display the D/W and N/V data of all vehicle configurations it will offer for the model year in question. The axis of the abscissa shall be D/W (where (D) is the engine displacement expressed in cubic centimeters and (W) is the equivalent vehicle test weight expressed in pounds), and the axis of the ordinate shall be N/V (where (N) is the crankshaft speed expressed in revolutions per minute and (V) is the vehicle speed expressed in miles per hour). At the manufacturer's option, either the 1:1 transmission gear ratio or the lowest numerical gear ratio available in the transmission will be used to determine N/V. The gear selection must be the same for all N/V data points on the manufacturer's graph. For each transmission/axle ratio combination, only the lowest N/V value shall be used in the graphical display.

(B) The product line is then defined by the equation, $N/V = C(D/W)^{-0.9}$, where the constant, C, is determined by the requirement that all the vehicle data points either fall on the line or lie

to the upper right of the line as displayed on the graphs.

(C) The exemption line is then defined by the equation, $N/V = C(0.84\ D/W)^{-0.9}$, where the constant, C, is the same as that found in paragraph (h)(1)(i)(B) of this section.

(D) The exempted range includes all values of N/V and D/W which simultaneously fall to the lower left of the exemption line as drawn on the graph.

(ii) Its design parameters fall within the alternate exempted range for that manufacturer that year. The alternate exempted range is determined by substituting rated horsepower (hp) for displacement (D) in the exemption procedure described in paragraph (h)(1)(i) of this section and by using the product line $N/V = C(hp/W)^{-0.9}$.

(A) Rated horsepower shall be determined by using the Society of Automotive Engineers Test Procedure J 1349, June 1990, Engine Power Test Code—Spark Ignition and Compression Ignition—Net Power Rating. This incorporation by reference was approved by the Director of the Federal Register in accordance with 5 U.S.C. 552(a) and 1 CFR part 51. Copies may be obtained from SAE International, 400 Commonwealth Drive, Warrendale, PA, 15096–0001. Copies may be inspected at U.S. EPA, OAR, 401 M St., SW., Washington, DC 20460, or at the National Archives and Records Administration (NARA). For information on the availability of this material at NARA, call 202–741–6030, or go to: *http://www.archives.gov/federal_register/code_of_federal_regulations/ibr_locations.html*. Any of the horsepower determinants within that test procedure may be used, as long as it is used consistently throughout the manufacturer's product line in any model year.

(B) No exemptions will be allowed under paragraph (h)(1)(ii) of this section to any manufacturer that has exempted vehicle configurations as set forth in paragraph (h)(1)(i) of this section.

(iii) Its acceleration time (the time it takes a vehicle to accelerate from 0 miles per hour to a speed not less than 40 miles per hour and not greater than 50 miles per hour) under high-altitude conditions is greater than the largest acceleration time under low-altitude conditions for that manufacturer for that year. The procedure to be followed in making this determination is:

(A) The manufacturer shall list the vehicle configuration and acceleration time under low-altitude conditions of that vehicle configuration which has the highest acceleration time under low-altitude conditions of all the vehicle configurations it will offer for the model year in question. The manufacturer shall also submit a description of the methodology used to make this determination.

(B) The manufacturer shall then list the vehicle configurations and acceleration times under high-altitude conditions of all those vehicle configurations which have higher acceleration times under high-altitude conditions than the highest acceleration time at low altitude identified in paragraph (h)(1)(iii)(A) of this section.

(iv) In lieu of performing the test procedure of paragraphs (h)(1)(iii) (A) and (B) of this section, its acceleration time can be estimated based on the manufacturer's engineering evaluation, in accordance with good engineering practice, to meet the exemption criteria of paragraph (h)(1)(iii) of this section.

(2) A vehicle shall only be considered eligible for exemption under this paragraph (h) if at least one configuration of its model type (and transmission configuration in the case of vehicles equipped with manual transmissions, excluding differences due to the presence of overdrive) is certified to meet emission standards under high-altitude conditions as specified in paragraphs (a) through (c) and (g) of this section. The Certificate of Conformity (the Certificate) covering any exempted configuration(s) will also apply to the corresponding non-exempt configuration(s) required under this paragraph (h)(2). As a condition to the exemption, any suspension, revocation, voiding, or withdrawal of the Certificate as it applies to a non-exempt configuration for any reason will result in a suspension of the Certificate as it applies to the corresponding exempted configuration(s) of that model type, unless there is at least one other corresponding non-exempt configuration of the same

model type still covered by the Certificate. The suspension of the Certificate as it applies to the exempted configuration(s) will be terminated when any one of the following occurs:

(i) Another corresponding non-exempt configuration(s) receive(s) coverage under the Certificate; or

(ii) Suspension of the Certificate as it applies to the corresponding non-exempt configuration(s) is terminated; or

(iii) The Agency's action(s), with respect to suspension, revocation, voiding, or withdrawal of the Certificate as it applies to the corresponding non-exempt configuration(s), is reversed.

(3) The sale of a vehicle for principal use at a designated high-altitude location that has been exempted as set forth in paragraph (h) of this section will be considered a violation of section 203(a)(1) of the Clean Air Act.

(i)(1) The manufacturers may exempt 1994 and later model year vehicles from compliance at low altitude with the emission standards set forth in paragraph (a) of this section and § 86.090–8 (b) if the vehicles:

(i) Are not intended for sale at low altitude; and

(ii) Are equipped with a unique, high-altitude axle ratio (rear-wheel drive vehicles) or a unique, high-altitude drivetrain (front-wheel drive vehicles) with a higher N/V ratio than other configurations of that model type which are certified in compliance with the emission standards of paragraph (a) of this section and § 86.090–8 (b) under low-altitude conditions.

(2) The sale of a vehicle for principal use at low altitude that has been exempted as set forth in paragraph (i)(1) of this section will be considered a violation of section 203(a)(1) of the Clean Air Act.

(j) Any exempted light-duty vehicle that a manufacturer wishes to certify for sale under the provisions of § 86.090–8 (h) or paragraph (i) of this section is subject to the provisions of subpart Q of this part.

(k) *Cold Temperature Carbon Monoxide (CO) Standards.* (1) For gasoline-fueled light-duty vehicles, a minimum of the percentage shown in table A94–16 of a manufacturer's sales of the applicable model year's light-duty vehicles shall not exceed the applicable cold temperature CO standard of 10.0 grams per mile for an intermediate useful life of 50,000 miles, as measured and calculated under the provisions set forth in subpart C of this part. This standard applies under both low and high altitude conditions. At the manufacturer's option, the manufacturer may combine the sales of gasoline-fueled light-duty vehicles and gasoline-fueled light-duty trucks in determining compliance with the required 1994 and 1995 model year phase-in percentages as included in table A94–16.

(2)(i) Sales percentages for the purposes of determining compliance with paragraph (k)(1) of this section shall be based on total actual and, at the manufacturer's option, combined U.S. sales of light-duty vehicles, light light-duty trucks, and heavy light-duty trucks of the applicable model year by a manufacturer to a dealer, distributor, fleet operator, broker, or any other entity which comprises the point of first sale.

(ii) The manufacturer may petition the Administrator to allow actual volume produced for U.S. sales to be used in lieu of actual U.S. sales for purposes of determining compliance with the implementation schedule sales percentages of table A94–16. Such petition shall be submitted within 30 days of the end of the model year the Manufacturers Operations Division. For the petition to be granted, the manufacturer must establish to the satisfaction of the Administrator that actual production volume is functionally equivalent to actual sales volume.

(iii) The manufacturer may count towards the sales percentages those light-duty vehicles, light light-duty trucks, and heavy light-duty trucks of the applicable model year sold in the state of California or in jurisdictions which have adopted the California emission standards under section 177 of the Clean Air Act if those light-duty vehicles, light light-duty trucks, and heavy light-duty trucks certified have been to meet the federally mandated cold CO standards. If this option is taken, all light-duty vehicles, light light-duty trucks, and heavy light-duty trucks sold in California and such jurisdictions shall be counted toward the total upon which the sales percentage is based. If this option is not taken,

light-duty vehicles, light light-duty trucks, and heavy light-duty trucks sold in California or such jurisdictions are to be excluded from counting toward either the total upon which the sales percentage is based or the sales percentage itself.

(iv) Small volume manufacturers, as defined in § 86.092–14(b) (1) and (2), are exempt from the implementation schedules of table A94–16 for model years 1994 and 1995. This exemption does not apply to small volume engine families as defined in § 86.092–14(b)(5).

(v) The manufacturer must state at the time of applying for the Certificate, based on projected U.S. sales or projected production for U.S. sale, which engine families will be used to attain the required implementation schedule sales percentages.

[56 FR 25740, June 5, 1991, as amended at 57 FR 31898, July 17, 1992; 59 FR 48494, Sept. 21, 1994; 62 FR 47120, Sept. 5, 1997]

§ 86.094–9 Emission standards for 1994 and later model year light-duty trucks.

(a)(1) *Standards*—(i) *Light light-duty trucks.* Exhaust emission from 1994 and later model year light light-duty trucks shall meet all standards in Tables A94–8, A94–9, A94–11 and A94–12 in the rows designated with the applicable fuel type and loaded vehicle weight, according to the implementation schedule in Tables A94–7 and A94–10 as follows (optional for 1994 through 1996 model year gaseous-fueled light light-duty trucks):

(A)(*1*)(*i*) A minimum of the percentage shown in table A94–7 of a manufacturer's sales of the applicable model year's light light-duty trucks shall not exceed the applicable Tier 1 standards in table A94–8 and shall not exceed the applicable Tier 1 standards in table A94–9. The remaining vehicles shall not exceed the applicable Tier 0 standards in table A94–9.

(*ii*) Optionally, a minimum of the percentage shown in table A94–7 of a manufacturer's combined sales of the applicable model year's light-duty vehicles and light light-duty trucks shall not exceed the applicable Tier 1 standards. Under this option, the light-duty vehicles shall not exceed the applicable Tier 1 standards in table A94–2 of § 86.094–8 and shall not exceed the applicable Tier 1 standards in table A94–3 of § 86.094–8. Further, the light light-duty trucks shall not exceed the applicable Tier 1 standards in table A94–8 and shall not exceed the applicable Tier 1 standards of table A94–9. The remaining percentage of the manufacturer's combined sales of the applicable model year's light-duty vehicles and light light-duty trucks shall not exceed the corresponding Tier 0 standards.

(*2*) A minimum of the percentage shown in table A94–10 of a manufacturer's sales of the applicable model year's light light-duty trucks shall not exceed the applicable Tier 1 standards in table A94–11 and shall not exceed the applicable Tier 1 standards in table A94–12. The remaining vehicles shall not exceed the applicable Tier 0 standards in table A94–12.

TABLE A94–7—IMPLEMENTATION SCHEDULE FOR LIGHT LIGHT-DUTY TRUCKS FOR HCS, CO, AND NO_X

Model year	Tier 1 percentage
1994	40
1995	80
After 1995	100

TABLE A94–8—INTERMEDIATE USEFUL LIFE STANDARDS (G/MI) FOR LIGHT LIGHT-DUTY TRUCKS FOR HCS, CO AND NO_X

Fuel	LVW (lbs)	Standards	THC	NMHC	THCE	NMHCE	CO	NO_X
Gasoline	0–3750	Tier 0						
Gasoline	0–3750	Tier 1		0.25			3.4	0.4
Gasoline	3751–5750	Tier 0						
Gasoline	3751–5750	Tier 1		0.32			4.4	0.7
Diesel	0–3750	Tier 0						
Diesel	0–3750	Tier 1		0.25			3.4	1.0

TABLE A94–8—INTERMEDIATE USEFUL LIFE STANDARDS (G/MI) FOR LIGHT LIGHT-DUTY TRUCKS FOR HCS, CO AND NO_X—Continued

Fuel	LVW (lbs)	Standards	THC	NMHC	THCE	NMHCE	CO	NO_X
Diesel	3751–5750	Tier 0						
Diesel	3751–5750	Tier 1		0.32			4.4	
Methanol	0–3750	Tier 0						
Methanol	0–3750	Tier 1				0.25	3.4	0.4
Methanol	3751–5750	Tier 0						
Methanol	3751–5750	Tier 1				0.32	4.4	0.7
Natural Gas	0–3750	Tier 0						
Natural Gas	0–3750	Tier 1		0.25			3.4	0.4
Natural Gas	3751–5750	Tier 0						
Natural Gas	3751–5750	Tier 1		0.32			4.4	0.7
LPG	0–3750	Tier 0						
LPG	0–3750	Tier 1		0.25			3.4	0.4
LPG	3751–5750	Tier 0						
LPG	3751–5750	Tier 1		0.32			4.4	0.7

TABLE A94–9—FULL USEFUL LIFE STANDARDS (G/MI) FOR LIGHT LIGHT-DUTY TRUCKS FOR HCS, CO AND NO_X

Fuel	LVW (lbs)	Standards	THC [1]	NMHC	THCE [1]	NMHCE	CO	NO_X
Gasoline	0–3750	Tier 0	0.80				10	1.2
Gasoline	0–3750	Tier 1	0.80	0.31			4.2	0.6
Gasoline	3751–5750	Tier 0	0.80				10	1.7
Gasoline	3751–5750	Tier 1	0.80	0.40			5.5	0.97
Diesel	0–3750	Tier 0	0.80				10	1.2
Diesel	0–3750	Tier 1	0.80	0.31			4.2	1.25
Diesel	3751–5750	Tier 0	0.80				10	1.7
Diesel	3751–5750	Tier 1	0.80	0.40			5.5	0.97
Methanol	0–3750	Tier 0			0.80		10	1.2
Methanol	0–3750	Tier 1			0.80	0.31	4.2	0.6
Methanol	3751–5750	Tier 0			0.80		10	1.7
Methanol	3751–5750	Tier 1			0.80	0.40	5.5	0.97
Natural Gas	0–3750	Tier 0		0.67			10	1.2
Natural Gas	0–3750	Tier 1		0.31			4.2	0.6
Natural Gas	3751–5750	Tier 0		0.67			10	1.7
Natural Gas	3751–5750	Tier 1		0.40			5.5	0.97
LPG	0–3750	Tier 0	0.80				10	1.2
LPG	0–3750	Tier 1	0.80	0.31			4.2	0.6
LPG	3751–5750	Tier 0	0.80				10	1.7
LPG	3751–5750	Tier 1	0.80	0.40			5.5	0.97

[1] Full useful life is 11 years or 120,000 miles, whichever occurs first.

TABLE A94–10—IMPLEMENTATION SCHEDULE FOR LIGHT LIGHT-DUTY TRUCKS FOR PM

Model year	Tier 1 Percentage
1994	0
1995	40
1996	80
After 1996	100

TABLE A94–11—INTERMEDIATE USEFUL LIFE STANDARDS (G/MI) FOR LIGHT LIGHT-DUTY TRUCKS FOR PM

Fuel	LVW (lbs)	Standards	PM
Gasoline	0–3750	Tier 0	
Gasoline	0–3750	Tier 1	0.08
Gasoline	3751–5750	Tier 0	
Gasoline	3751–5750	Tier 1	0.08
Diesel	0–3750	Tier 0	
Diesel	0–3750	Tier 1	0.08
Diesel	3751–5750	Tier 0	
Diesel	3751–5750	Tier 1	0.08
Methanol	0–3750	Tier 0	
Methanol	0–3750	Tier 1	0.08

TABLE A94–11—INTERMEDIATE USEFUL LIFE STANDARDS (G/MI) FOR LIGHT LIGHT-DUTY TRUCKS FOR PM—Continued

Fuel	LVW (lbs)	Standards	PM
Methanol	3751–5750	Tier 0	.....
Methanol	3751–5750	Tier 1	0.08
Natural Gas	0–3750	Tier 0	.....
Natural Gas	0–3750	Tier 1	0.08
Natural Gas	3751–5750	Tier 0	.....
Natural Gas	3751–5750	Tier 1	0.08
LPG	0–3750	Tier 0	.....
LPG	0–3750	Tier 1	0.08
LPG	3751–5750	Tier 0	.....
LPG	3751–5750	Tier 1	0.08

TABLE A94–12—FULL USEFUL LIFE STANDARDS (G/MI) FOR LIGHT LIGHT-DUTY TRUCKS FOR PM

Fuel	LVW (lbs)	Standards	PM
Gasoline	0–3750	Tier 0	.....
Gasoline	0–3750	Tier 1	0.10
Gasoline	3751–5750	Tier 0	.....
Gasoline	3751–5750	Tier 1	0.10
Diesel	0–3750	Tier 0	0.26
Diesel	0–3750	Tier 1	0.10
Diesel	3751–5750	Tier 0	0.13
Diesel	3751–5750	Tier 1	0.10
Methanol	0–3750	Tier 0	[1] 0.26
Methanol	0–3750	Tier 1	0.10
Methanol	3751–5750	Tier 0	[1] 0.13
Methanol	3751–5750	Tier 1	0.10
Natural Gas	0–3750	Tier 0	[1] 0.26
Natural Gas	0–3750	Tier 1	0.10
Natural Gas	3751–5750	Tier 0	[1] 0.13
Natural Gas	3751–5750	Tier 1	0.10
LPG	0–3750	Tier 0	[1] 0.26
LPG	0–3750	Tier 1	0.10
LPG	3751–5750	Tier 0	[1] 0.13
LPG	3751–5750	Tier 1	0.10

[1] Applicable only to diesel-cycle vehicles.

(B)(*1*)(*i*) Sales percentages for the purposes of determining compliance with paragraph (a)(1)(i)(A) of this section shall be based on total actual U.S. sales of light light-duty trucks of the applicable model year by a manufacturer to a dealer, distributor, fleet operator, broker, or any other entity which comprises the point of first sale. If the option of paragraph (a)(1)(i)(A)(*1*)(*ii*) of this section is taken, such sales percentages shall be based on the total actual combined U.S. sales of light-duty vehicles and light light-duty trucks of the applicable model year by a manufacturer to a dealer, distributor, fleet operator, broker, or any other entity which comprises the point of first sale.

(*ii*) The manufacturer may petition the Administrator to allow actual volume produced for U.S. sales to be used in lieu of actual U.S. sales for purposes of determining compliance with the implementation schedule sales percentages of tables A94–7 and A94–10 of this section. Such petition shall be submitted within 30 days of the end of the model year to the Manufacturers Operations Division. For the petition to be granted, the manufacturer must establish to the satisfaction of the Administrator that actual production volume is functionally equivalent to actual sales volume.

(*iii*) The manufacturer may count toward the sales percentages light light-duty trucks of the applicable model year that meet certain standards for that same model year contained in Title 13, ''California Code of Regulations, Section 1960.1, and the incorporated California Exhaust Emission Standards and Test Procedures for 1988 and Subsequent Model Passenger Cars, Light-Duty Trucks, and Medium-Duty

Vehicles.'' (Copies may be obtained from Barclays Law Publishers, P.O. Box 3066, San Francisco, CA 94080.) The relevant standards from that source are those that are designated as phase-in standards for selected pollutants and were first applied in the 1993 model year, as well as those for all remaining pollutants that require compliance at the one hundred percent level. If this option is taken, all light light-duty trucks sold in jurisdictions adopting such standards shall be counted toward the total upon which the sales percentage is based. If this option is not taken, light light-duty trucks sold in such jurisdictions are to be excluded from counting toward either the total upon which the sales percentage is based or the sales percentage itself.

(*iv*) Small volume manufacturers, as defined in § 86.092–14(b) (1) and (2), are exempt from the implementation schedules of table A94–7 of this section for model years 1994 and 1995 and from the implementation schedules of table A94–10 of this section for model years 1995 and 1996. For small volume manufacturers, the Tier 0 standards of table A94–9 continue to apply until model year 1996, and the Tier 0 standards of table A94–12 continue to apply until model year 1997, when one hundred percent compliance with the Tier 1 standards of tables A94–8, A94–9, A94–11, and A94–12 is required. This exemption does not apply to small volume engine families as defined in § 86.092–14(b)(5).

(*2*)(*i*)Where the required implementation schedule sales percentages for in-use purposes, as prescribed in subpart H of this part, are the same in a given model year as the required implementation schedule sales percentages for certification purposes, as prescribed in this section, the same engine families must comprise the respective percentages.

(*ii*) Where the required implementation schedule sales percentages for in-use purposes differ from implementation schedule sales percentages for certification purposes in a particular model year, the manufacturer must designate, at the time of Application for Certification, which families will meet each applicable in-use phase-in percentage.

(*3*) The manufacturer must state at the time of Application for Certification, based on projected U.S. sales or projected production for U.S. sale, which families will be used to attain the required implementation schedule sales percentages for certification purposes.

(*4*) A manufacturer can not use one set of engine families to meet its intermediate useful life standards and another to meet its full useful life standards. The same families which are used to meet the intermediate useful life standards will be required without deviation to meet the corresponding full useful life standards.

(ii) *Heavy light-duty trucks.* Exhaust emissions from 1994 and later model year heavy light-duty trucks shall meet all standards in Tables A94–14 and A94–15 in the rows designated with the applicable fuel type and loaded vehicle weight or adjusted loaded vehicle weight, as applicable, according to the implementation schedule in Table A94–13, as follows (optional for 1994 through 1996 model year gaseous-fueled heavy light-duty trucks):

(A) A minimum of the percentage shown in table A94–13 of a manufacturer's sales of the applicable model year's heavy light-duty trucks shall not exceed the applicable Tier 1 standards in table A94–14 and shall not exceed the applicable Tier 1 standards in table A94–15. The remaining vehicles shall not exceed the applicable Tier 0 standards in table A94–15.

TABLE A94–13—IMPLEMENTATION SCHEDULE FOR HEAVY LIGHT-DUTY TRUCKS FOR HCS, CO, NO_X AND PM

Model year	Tier 1 percentage
1994	0
1995	0
1996	50
after 1996	100

TABLE A94–14—INTERMEDIATE USEFUL LIFE STANDARDS (G/MI) FOR HEAVY LIGHT-DUTY TRUCKS FOR HCS, CO, NO_X AND PM

Fuel	ALVW (lbs)	Standards	THC	NMHC	THCE	NMHCE	CO	NO_X	PM
Gasoline	3751–5750	Tier 0							
Gasoline	3751–5750	Tier 1		0.32			4.4	0.7	
Gasoline	> 5750	Tier 0							
Gasoline	> 5750	Tier 1		0.39			5.0	1.1	
Diesel	3751–5750	Tier 0							
Diesel	3751–5750	Tier 1		0.32			4.4		
Diesel	> 5750	Tier 0							
Diesel	> 5750	Tier 1		0.39			5.0		
Methanol	3751–5750	Tier 0							
Methanol	3751–5750	Tier 1				0.32	4.4	0.7	
Methanol	> 5750	Tier 0							
Methanol	> 5750	Tier 1				0.39	5.0	1.1	
Natural Gas	3751–5750	Tier 0							
Natural Gas	3751–5750	Tier 1		0.32			4.4	0.7	
Natural Gas	> 5750	Tier 0							
Natural Gas	> 5750	Tier 1		0.39			5.0	1.1	
LPG	3751–5750	Tier 0							
LPG	3751–5750	Tier 1		0.32			4.4	0.7	
LPG	> 5750	Tier 0							
LPG	> 5750	Tier 1		0.39			5.0	1.1	

TABLE A94–15—FULL USEFUL LIFE STANDARDS (G/MI) FOR HEAVY LIGHT-DUTY TRUCKS FOR HCS, CO, NO_X AND PM

Fuel	LVW (lbs)	ALVW (lbs)	Standards	THC	NMHC	THCE	NMHCE	CO	NO_X	PM
Gasoline	0–3750		Tier 0	0.80				10	1.2	
Gasoline	>3750		Tier 0	0.80				10	1.7	
Gasoline		3751–5750	Tier 1	0.80	0.46			6.4	0.98	0.10
Gasoline		>5750	Tier 1	0.80	0.56			7.3	1.53	0.12
Diesel	0–3750		Tier 0	0.80				10	1.20	0.26
Diesel	>3750		Tier 0	0.80				10	1.7	0.13
Diesel		3751–5750	Tier 1	0.80	0.46			6.4	0.98	0.10
Diesel		>5750	Tier 1	0.80	0.56			7.3	1.53	0.12
Methanol	0–3750		Tier 0			0.80		10	1.2	[1] 0.26
Methanol	>3750		Tier 0			0.80		10	1.7	[1] 0.13
Methanol		3751–5750	Tier 1			0.80	0.46	6.4	0.98	0.10
Methanol		>5750	Tier 1			0.80	0.56	7.3	1.53	0.12
Natural Gas	0–3750		Tier 0		0.67			10	1.2	[1] 0.26
Natural Gas	>3750		Tier 0		0.67			10	1.7	[1] 0.13
Natural Gas		3751–5750	Tier 1		0.46			6.4	0.98	0.10
Natural Gas		>5750	Tier 1		0.56			7.3	1.53	0.12
LPG	0–3750		Tier 0	0.80				10	1.2	[1] 0.26
LPG	>3750		Tier 0	0.80				10	1.7	[1] 0.13
LPG		3751–5750	Tier 1	0.80	0.46			6.4	0.98	0.10
LPG		>5750	Tier 1	0.80	0.56			7.3	1.53	0.12

[1] Applicable only to diesel-cycle vehicles.

(B)(*1*)(*i*) Sales percentages for the purposes of determining compliance with paragraph (a)(1)(ii)(A) of this section shall be based on total actual U.S. sales of heavy light-duty trucks of the applicable model year by a manufacturer to a dealer, distributor, fleet operator, broker, or any other entity which comprises the point of first sale.

(*ii*) The manufacturer may petition the Administrator to allow actual volume produced for U.S. sale to be used in lieu of actual U.S. sales for purposes of determining compliance with the implementation schedule sales percentages of table A94–13 of this section. Such petition shall be submitted within 30 days of the end of the model year to the Manufacturers Operations Division. For the petition to be granted, the manufacturer must establish to the satisfaction of the Administrator that actual production volume is functionally equivalent to actual sales volume.

(*iii*) The manufacturer may count toward the sales percentages heavy light-

duty trucks of the applicable model year that meet certain standards for that same model year contained in Title 13, California Code of Regulations, Section 1960.1, and the incorporated ''California Exhaust Emission Standards and Test Procedures for 1988 and Subsequent Model Passenger Cars, Light-Duty Trucks, and Medium-Duty Vehicles.'' The relevant standards from that source are those that are designated as phase-in standards for selected pollutants and were first applied in the 1995 model year, as well as those for all remaining pollutants that require compliance at the one hundred percent level. If this option is taken, all heavy light-duty trucks sold in jurisdictions adopting such standards shall be counted toward the total upon which the sales percentage is based. If this option is not taken, heavy light-duty trucks sold in such jurisdictions are to be excluded from counting toward either the total upon which the sales percentage is based or the sales percentage itself.

(*iv*) Small volume manufacturers, as defined in § 86.092–14(b) (1) and (2), are exempt from the implementation schedule of table A94–13 of this section for model year 1996. For small volume manufacturers, the Tier 0 standards of table A94–15 continue to apply until model year 1997, when one hundred percent compliance with the Tier 1 standards of tables A94–14 and A94–15 is required. This exemption does not apply to small volume engine families as defined in § 86.092–14(b)(5).

(*2*)(*i*) Where the required implementation schedule sales percentages for in-use purposes, as prescribed in subpart H of this part, are the same in a given model year as the required implementation schedule sales percentages for certification purposes, as prescribed in this section, the same engine families must comprise the respective percentages.

(*ii*) Where the required implementation schedule sales percentages for in-use purposes differ from implementation schedule sales percentages for certification purposes in a particular model year, the manufacturer must designate, at the time of Application for Certification, which families will meet each applicable in-use phase-in percentage.

(*3*) The manufacturer must state at the time of Application for Certification, based on projected U.S. sales or projected production for U.S. sale, which families will be used to attain the required implementation schedule sales percentages for certification purposes.

(*4*) A manufacturer cannot use one set of engine families to meet its intermediate useful life standards and another to meet its full useful life standards. The same families which are used to meet the intermediate useful life standards will be required without deviation to meet the corresponding full useful life standards.

(iii) Exhaust emissions of carbon monoxide from 1994 and later model year light-duty trucks shall not exceed 0.50 percent of exhaust gas flow at curb idle at a useful life of 11 years or 120,000 miles, whichever first occurs (for Otto-cycle, and methanol-and gaseous-fueled diesel light-duty trucks only—optional for 1994 through 1996 model year gaseous-fueled light-duty trucks).

(iv)(A) A manufacturer may elect to include all or some of its light-duty truck engine families subject to the Tier 0 standards in the NO_X averaging program, provided that it does not elect to pay an NCP for noncompliance with any emission standard applicable to that light-duty truck family. Trucks produced for sale in California or in designated high-altitude areas may be averaged only within each of those areas. Petroleum-fueled and methanol-fueled engine families may not be averaged together. Otto-cycle and diesel engines families also may not be averaged together. If the manufacturer elects to participate in the NO_X averaging program, individual family NO_X emission limits may not exceed 2.3 grams per mile. If the manufacturer elects to average together NO_X emissions of light-duty trucks subject to different standards based on GVWR and loaded vehicle weight, its composite NO_X standard applies to the combined fleets of light-duty trucks of all weight categories included in the average, and is calculated as defined in § 86.088–2.

(B) A manufacturer may elect to include any diesel light-duty truck engine families subject to the Tier 0 standards in the appropriate particulate averaging program (petroleum or methanol), provided that it does not elect to pay an NCP for noncompliance with any emission standard applicable to that light-duty truck family. Trucks produced for sale in California or in designated high-altitude areas may be averaged only within each of those areas, and light-duty trucks greater than 3,750 lbs loaded vehicle weight may be averaged only with other light-duty trucks greater than 3,750 lbs loaded vehicle weight. Averaging is not permitted between fuel types. If the manufacturer elects to average both light-duty trucks 3,750 lbs loaded vehicle weight or less and light-duty vehicles together in the appropriate particulate averaging program, its composite particulate standard applies to the combined set of light-duty vehicles and light-duty trucks included in the average and is calculated as defined in § 86.088–2.

(2) The standards set forth in paragraphs (a)(1)(i) and (a)(1)(ii) of this section refer to the exhaust emitted over a driving schedule as set forth in subpart B of this part and measured and calculated in accordance with those procedures. The test weight basis for light light-duty trucks, and for heavy light-duty trucks certified to the Tier 0 standards of this section, for the purposes of determining equivalent test weight as prescribed in § 86.129–94, shall be loaded vehicle weight. The test weight basis for heavy light-duty trucks certified to the Tier 1 standards of this section, for the purposes of determining equivalent test weight as prescribed in § 86.129–94, shall be adjusted loaded vehicle weight. The standard set forth in paragraph (a)(1)(iii) of this section refers to the exhaust emitted at curb idle and measured and calculated in accordance with the procedures set forth in subpart P of this part.

(b) Fuel evaporative emissions from 1994 and later model year light-duty trucks shall not exceed:

(1) *Hydrocarbons (for gasoline-fueled light-duty trucks).* 2.0 grams per test.

(2) *Total Hydrocarbon Equivalent (for methanol-fueled light-duty trucks).* 2.0 grams per test.

(3) The standards set forth in paragraphs (b) (1) and (2) of this section refer to a composite sample of the fuel evaporative emissions collected under the conditions set forth in subpart B of this part and measured in accordance with those procedures.

(c) No crankcase emissions shall be discharged into the ambient atmosphere from any 1994 and later model year light-duty truck. This requirement is optional for 1994 through 1996 model year gaseous-fueled light-duty trucks.

(d) The CO, NO_X. and particulate standards set forth in paragraphs (d)(1)(ii)(A), (d)(1)(iii), and (d)(1)(iv) of this section, respectively, are applicable only to model year 1994 light-duty trucks certified to the Tier 0 standards of paragraphs (a)(1)(i) and (a)(1)(ii) of this section. The HC, THCE, and idle CO standards set forth in paragraphs (d)(1)(i)(A), (d)(1)(i)(B) and (d)(1)(ii)(B) of this section, respectively, are applicable only to model year 1994 light-duty trucks.

(1) Model year 1994 light-duty trucks sold for principal use at a designated high-altitude location shall be capable of meeting the following exhaust emission standards when tested under high-altitude conditions:

(i)(A) *Hydrocarbons (for Otto-cycle and diesel light-duty trucks when fueled with petroleum fuel and/or liquefied petroleum gas).* 1.0 grams per vehicle mile (0.62 grams per vehicle kilometer).

(B) *Total Hydrocarbon Equivalent (for methanol-fueled Otto-cycle and diesel light-duty trucks).* 1.0 gram per vehicle mile (0.62 gram per vehicle kilometer).

(C) *Nonmethane hydrocarbons (for Otto-cycle and diesel light-duty trucks when fueled with natural gas).* 0.83 gram per vehicle mile (0.52 gram per vehicle kilometer).

(ii) *Carbon Monoxide.* (A) 14 grams per vehicle mile (8.7 grams per vehicle kilometer).

(B) 0.50 percent of exhaust gas flow at curb idle (for Otto-cycle and methanol-fueled diesel light-duty trucks only).

(iii) *Oxides of Nitrogen.* (A) For light-duty trucks up to and including 3,750 lbs. loaded vehicle weight, 1.2 grams

per vehicle mile (0.75 grams per vehicle kilometer).

(B) For light-duty trucks 3,751 lbs. and greater loaded vehicle weight, 1.7 grams per vehicle mile (1.1 grams per vehicle kilometer).

(iv) *Particulate (for diesel light-duty trucks only).* (A) For light-duty trucks up to and including 3,750 lbs. loaded vehicle weight, 0.26 gram per vehicle mile (0.16 gram per vehicle kilometer).

(B) For light-duty trucks 3,751 lbs. and greater loaded vehicle weight, 0.13 gram per vehicle mile (0.08 gram per vehicle kilometer).

(2) The standards set forth in paragraphs (d)(1)(i), (d)(1)(ii)(A), (d)(1)(iii), and (d)(1)(iv) of this section refer to the exhaust emitted over a driving schedule as set forth in subpart B of this part and measured and calculated in accordance with those procedures. The standard set forth in paragraph (d)(1)(ii)(B) of this section refers to the exhaust emitted at curb idle and measured and calculated in accordance with the procedures set forth in subpart P of this part.

(e) Fuel evaporative emissions from 1994 model year light-duty trucks sold for principal use at a designated high-altitude location, when tested under high-altitude conditions, shall not exceed:

(1) *Hydrocarbons (for gasoline-fueled light-duty trucks).* 2.6 grams per test.

(2) *Total Hydrocarbon Equivalent (for methanol-fueled light-duty trucks).* 2.6 grams per test.

(3) The standards set forth in paragraphs (e) (1) and (2) of this section refer to a composite sample of the fuel evaporative emissions collected under the conditions set forth in subpart B of this part and measured in accordance with those procedures.

(f) No crankcase emissions shall be discharged into the ambient atmosphere from any 1994 model year light-duty trucks sold for principal use at a designated high-altitude location.

(g)(1) Any model year 1994 light-duty truck that a manufacturer wishes to certify for sale at low altitude must be capable of meeting high-altitude emission standards (specified in paragraphs (d) through (f) of this section). The manufacturer may specify vehicle adjustments or modifications to allow the vehicle to meet high-altitude standards but these adjustments or modifications may not alter the vehicle's basic engine, inertia weight class, transmission configuration, and axle ratio.

(i) A manufacturer may certify unique configurations to meet the high-altitude standards but is not required to certify these vehicle configurations to meet the low-altitude standards.

(ii) Any adjustments or modifications that are recommended to be performed on vehicles to satisfy the requirements of paragraph (g)(1) of this section:

(A) Shall be capable of being effectively performed by commercial repair facilities, and

(B) Must be included in the manufacturer's application for certification.

(2) Any model year 1995 and later light-duty truck and optionally model year 1994 light-duty truck that a manufacturer wishes to certify for sale shall meet the emission standards of paragraphs (a) through (c) of this section under both low- and high-altitude conditions as specified in § 86.082–2, except as provided in paragraphs (h) and (i) of this section. Vehicles shall meet emission standards under both low- and high-altitude conditions without manual adjustments or modifications. Any emission control device used to meet emission standards under high-altitude conditions shall initially actuate (automatically) no higher than 4,000 feet above sea level.

(h) The manufacturer may exempt 1994 and later model year light-duty trucks from compliance at high altitude with the emission standards set forth in paragraphs (a) and (b) of this section, and may exempt 1994 model year light-duty trucks from compliance with the high-altitude emission standards set forth in paragraphs (d) and (e) of this section, if the vehicles are not intended for sale at high altitude and if the requirements of paragraphs (h)(1) and (2) of this section are met.

(1) A vehicle configuration shall only be considered eligible for exemption under paragraph (h) of this section if the requirements of any of paragraphs (h)(1) (i), (ii), (iii), or (iv) of this section are met.

(i) Its design parameters (displacement-to-weight ratio (D/W) and engine speed-to-vehicle-speed ratio (N/V)) fall within the exempted range for that manufacturer for that year. The exempted range is determined according to the following procedure:

(A) The manufacturer shall graphically display the D/W and N/V data of all vehicle configurations it will offer for the model year in question. The axis of the abscissa shall be D/W (where (D) is the engine displacement expressed in cubic centimeters and (W) is the gross vehicle weight (GVW) expressed in pounds), and the axis of the ordinate shall be N/V (where (N) is the crankshaft speed expressed in revolutions per minute and (V) is the vehicle speed expressed in miles per hour). At the manufacturer's option, either the 1:1 transmission gear ratio or the lowest numerical gear ratio available in the transmission will be used to determine N/V. The gear selection must be the same for all N/V data points on the manufacturer's graph. For each transmission/axle ratio combination, only the lowest N/V value shall be used in the graphical display.

(B) The product line is then defined by the equation, $N/V = C(D/W)^{-0.9}$ where the constant, C, is determined by the requirement that all the vehicle data points either fall on the line or lie to the upper right of the line as displayed on the graphs.

(C) The exemption line is then defined by the equation, $N/V = C(0.84\ D/W)^{-0.9}$ where the constant, C, is the same as that found in paragraph (h)(1)(i)(B) of this section.

(D) The exempted range includes all values of N/V and D/W which simultaneously fall to the lower left of the exemption line as drawn on the graph.

(ii) Its design parameters fall within the alternate exempted range for that manufacturer that year. The alternate exempted range is determined by substituting rated horsepower (hp) for displacement (D) in the exemption procedure described in paragraph (h)(1)(i) of this section and by using the product line $N/V = C(hp/W)^{-0.9}$.

(A) Rated horsepower shall be determined by using the Society of Automotive Engineers Test Procedure J 1349 (copies may be obtained from SAE, 400 Commonwealth Dr., Warrendale, PA 15096), or any subsequent version of that test procedure. Any of the horsepower determinants within that test procedure may be used, as long as it is used consistently throughout the manufacturer's product line in any model year.

(B) No exemptions will be allowed under paragraph (h)(1)(ii) of this section to any manufacturer that has exempted vehicle configurations as set forth in paragraph (h)(1)(i) of this section.

(iii) Its acceleration time (the time it takes a vehicle to accelerate from 0 to a speed not less than 40 miles per hour and not greater than 50 miles per hour) under high-altitude conditions is greater than the largest acceleration time under low-altitude conditions for that manufacturer for that year. The procedure to be followed in making this determination is:

(A) The manufacturer shall list the vehicle configuration and acceleration time under low-altitude conditions of that vehicle configuration which has the highest acceleration time under low-altitude conditions of all the vehicle configurations it will offer for the model year in question. The manufacturer shall also submit a description of the methodology used to make this determination.

(B) The manufacturer shall then list the vehicle configurations and acceleration times under high-altitude conditions of all those vehicle configurations which have higher acceleration times under high-altitude conditions than the highest acceleration time at low altitude identified in paragraph (h)(1)(iii)(A) of this section.

(iv) In lieu of performing the test procedure of paragraph (h)(1)(iii) of this section, its acceleration time can be estimated based on the manufacturer's engineering evaluation, in accordance with good engineering practice, to meet the exemption criteria of paragraph (h)(1)(iii) of this section.

(2) A vehicle shall only be considered eligible for exemption under this paragraph if at least one configuration of its model type (and transmission configuration in the case of vehicles equipped with manual transmissions,

excluding differences due to the presence of overdrive) is certified to meet emission standards under high-altitude conditions as specified in paragraphs (a) through (g) of this section. The Certificate of Conformity (the Certificate) covering any exempted configuration(s) will also apply to the corresponding non-exempt configuration(s) required under this subparagraph. As a condition to the exemption, any suspension, revocation, voiding, or withdrawal of the Certificate as it applies to a non-exempt configuration for any reason will result in a suspension of the Certificate as it applies to the corresponding exempted configuration(s) of that model type, unless there is at least one other corresponding non-exempt configuration of the same model type still covered by the Certificate. The suspension of the Certificate as it applies to the exempted configuration(s) will be terminated when any one of the following occurs:

(i) Another corresponding non-exempt configuration(s) receive(s) coverage under the Certificate; or

(ii) Suspension of the Certificate as it applies to the corresponding non-exempt configuration(s) is terminated; or

(iii) The Agency's action(s), with respect to suspension, revocation, voiding or withdrawal of the Certificate as it applies to the corresponding non-exempt configuration(s), is reversed.

(3) The sale of a vehicle for principal use at a designated high-altitude location that has been exempted as set forth in paragraph (h)(1) of this section will be considered a violation of section 203(a)(1) of the Clean Air Act.

(i)(1) The manufacturers may exempt 1994 and later model year light-duty trucks from compliance at low altitude with the emission standards set forth in paragraphs (a) and (b) of this section if the vehicles:

(i) Are not intended for sale at low altitude; and

(ii) Are equipped with a unique, high-altitude axle ratio (rear-wheel drive vehicles) or a unique, high-altitude drivetrain (front-wheel drive vehicles) with a higher N/V ratio than other configurations of that model type which are certified in compliance with the emission standards of paragraphs (a) and (b) of this section under low-altitude conditions.

(2) The sale of a vehicle for principal use at low altitude that has been exempted as set forth in paragraph (i)(1) of this section will be considered a violation of section 203(a)(1) of the Clean Air Act.

(j) Any light-duty truck that a manufacturer wishes to certify for sale under the provisions of paragraphs (h) or (i) of this section is subject to the provisions of subpart Q of this part.

(k) *Cold Temperature Carbon Monoxide (CO) Standards*—(1) *Light light-duty trucks*. Exhaust emissions from 1994 and later model year gasoline-fueled light light-duty trucks with a loaded vehicle weight of 3,750 lbs or less shall meet a cold temperature CO standard of 10.0 grams per mile and gasoline-fueled light light-duty trucks with a loaded vehicle weight of greater than 3,750 lbs shall meet a cold temperature CO standard of 12.5 grams per mile, both for an intermediate useful life of 50,000 miles and according to the implementation schedule in table A94–16. This standard applies under both high and low altitude conditions. At the manufacturer's option, the manufacturer may combine the sales of gasoline-fueled light-duty vehicles, light-duty trucks, and heavy light-duty trucks in determining compliance with the required 1994 and 1995 model year phase-in percentages as included in table A94–16.

TABLE A94–16—IMPLEMENTATION SCHEDULE FOR COMBINED SALES OF LIGHT-DUTY VEHICLES AND LIGHT-DUTY TRUCKS FOR COLD CO

Model year	Sales percentage
1994	40
1995	80
After 1995	100

(2) *Heavy light-duty trucks*. Exhaust emissions from 1994 and later model year gasoline-fueled heavy light-duty trucks shall meet a cold temperature CO standard of 12.5 grams per mile for an intermediate useful life of 50,000 miles and according to the implementation schedule in table A94–16. This standard applies under both low and high altitude conditions. At the manufacturer's option, the manufacturer

may combine the sales of gasoline-fueled light-duty vehicles, light light-duty trucks, and heavy light-duty trucks in determining compliance with the required 1994 and 1995 model year phase-in percentages as included in table A94–16.

(3)(i) Sales percentages for the purposes of determining compliance with paragraphs (k)(1) and (k)(2) of this section shall be based on total actual and, at the manufacturer's option, combined U.S. sales of light-duty vehicles, light light-duty trucks, and heavy light-duty trucks of the applicable model year by a manufacturer to a dealer, distributor, fleet operator, broker, or any other entity which comprises the point of first sale.

(ii) The manufacturer may petition the Administrator to allow actual volume produced for U.S. sales to be used in lieu of actual U.S. sales for purposes of determining compliance with the implementation schedule sales percentages of table A94–16. Such petition shall be submitted within 30 days of the end of the model year to the Manufacturers Operations Division. For the petition to be granted, the manufacturer must establish to the satisfaction of the Administrator that actual production volume is functionally equivalent to actual sales volume. Approval of the use of production data will be presumed unless otherwise notified by the Agency within 30 days of submittal of the petition.

(iii) The manufacturer may count towards the sales percentages those light-duty vehicles, light light-duty trucks, and heavy light-duty trucks of the applicable model year sold in the state of California or in jurisdictions which have adopted the California emission standards under section 177 of the Clean Air Act if those light-duty vehicles, light light-duty trucks, and heavy light-duty trucks have been certified to meet the federally mandated cold CO standards. If this option is taken, all light-duty vehicles, light light-duty trucks and heavy light-duty trucks sold in California and such jurisdictions shall be counted toward the total upon which the sales percentage is based. If this option is not taken, light-duty vehicles, light light-duty trucks, and heavy light-duty trucks sold in California or such jurisdictions are to be excluded from counting toward either the total upon which the sales percentage is based or the sales percentage itself.

(iv) Small volume manufacturers, as defined in § 86.092–14(b) (1) and (2), are exempt from the implementation schedules of table A94–16 for model years 1994 and 1995. This exemption does not apply to small volume engine families as defined in § 86.092–14(b)(5).

(v) The manufacturer must state at the time of applying for the Certificate, based on projected U.S. sales or projected production for U.S. sale, which engine families will be used to attain the required implementation schedule sales percentages.

[56 FR 25742, June 5, 1991, as amended at 57 FR 31899, July 17, 1992; 59 FR 48495, Sept. 21, 1994; 60 FR 34335, June 30, 1995; 62 FR 47120, Sept. 5, 1997]

§ 86.094–11 Emission standards for 1994 and later model year diesel heavy-duty engines and vehicles.

(a)(1) Exhaust emissions from new 1994 and later model year diesel heavy-duty engines shall not exceed the following (optional for 1994 through 1996 model year new natural gas- and liquefied petroleum gas-fueled heavy-duty engines):

(i)(A) *Hydrocarbons (for diesel engines fueled with either petroleum-fuel or liquefied petroleum gas).* 1.3 grams per brake horsepower-hour (0.48 gram per megajoule), as measured under transient operating conditions.

(B) *Total Hydrocarbon Equivalent (for methanol-fueled diesel engines).* 1.3 grams per brake horsepower-hour (0.48 gram per megajoule), as measured under transient operating conditions.

(C) *Nonmethane hydrocarbons (for natural gas-fueled diesel engines).* 1.2 grams per brake horsepower-hour (0.45 gram per megajoule), as measured under transient operating conditions.

(ii) *Carbon monoxide.* (A) 15.5 grams per brake horsepower-hour (5.77 grams per megajoule), as measured under transient operating conditions.

(B) 0.50 percent of exhaust gas flow at curb idle (methanol-, natural gas- and liquefied petroleum gas-fueled diesel only).

(iii) *Oxides of nitrogen.* (A) 5.0 grams per brake horsepower-hour (1.9 grams per megajoule), as measured under transient operating conditions.

(B) A manufacturer may elect to include any or all of its diesel heavy-duty engine families in any or all of the NO_X averaging, trading, or banking programs for heavy-duty engines, within the restrictions described in § 86.094–15. If the manufacturer elects to include engine families in any of these programs, the NO_X FELs may not exceed 6.0 grams per brake horsepower-hour (2.2 grams per megajoule). This ceiling value applies whether credits for the family are derived from averaging, trading or banking programs.

(iv) *Particulate.* (A) For diesel engines to be used in urban buses, 0.07 gram per brake horsepower-hour (0.026 gram per megajoule), as measured under transient operating conditions.

(B) For all other diesel engines only, 0.10 gram per brake horsepower-hour (0.037 gram per megajoule), as measured under transient operating conditions.

(C) A manufacturer may elect to include any or all of its diesel heavy-duty engine families in any or all of the particulate averaging, trading, or banking programs for heavy-duty engines, within the restrictions described in § 86.094–15. If the manufacturer elects to include engine families in any of these programs, the particulate FEL may not exceed:

(*1*) For engine families intended for use in urban buses, 0.25 gram per brake horsepower-hour (0.093 gram per megajoule).

(*2*) For engine families *not* intended for use in urban buses, 0.60 gram per brake horsepower-hour (0.22 gram per megajoule).

(*3*) The ceiling values in paragraphs (a)(1)(iv)(C) (*1*) and (*2*) of this section apply whether credits for the family are derived from averaging, trading, or banking programs.

(b)(1) The opacity of smoke from new 1994 and later model year diesel heavy-duty engines shall not exceed (optional for 1994 through 1996 model year gaseous-fueled diesel heavy-duty engines):

(i) 20 percent during the engine acceleration mode.

(ii) 15 percent during the engine lugging mode.

(iii) 50 percent during the peaks in either mode.

(2) The standards set forth in paragraph (b)(1) of this section refer to exhaust smoke emissions generated under the conditions set forth in subpart I of this part and measured and calculated in accordance with those procedures.

(3) *Evaporative emissions* (total of non-oxygenated hydrocarbons plus methanol) from 1994 and later model year heavy-duty vehicles equipped with methanol-fueled diesel engines shall not exceed:

(i) For vehicles with a Gross Vehicle Weight Rating of up to 14,000 lbs, 3.0 grams per test.

(ii) For vehicles with a Gross Vehicle Weight Rating of greater than 14,000 lbs, 4.0 grams per test.

(4)(i) For vehicles with a Gross Vehicle Weight Rating of up to 26,000 lbs, the standards set forth in paragraph (b)(3) of this section refer to a composite sample of evaporative emissions collected under the conditions set forth in subpart M and measured in accordance with those procedures.

(ii) For vehicles with a Gross Vehicle Weight Rating of greater than 26,000 lbs, the standard set forth in paragraph (b)(3)(ii) of this section refers to the manufacturers, engineering design evaluation using good engineering practice (a statement of which is required in § 86.091–23(b)(4)(ii)).

(c) No crankcase emissions shall be discharged into the ambient atmosphere from any new 1994 or later model year methanol-fueled diesel, or any naturally-aspirated diesel heavy-duty engine (optional for 1994 through 1996 model year natural gas- and liquefied petroleum gas-fueled engines). For petroleum-, natural gas- and liquefied petroleum gas-fueled engines only; this provision does not apply to engines using turbochargers, pumps, blowers, or superchargers for air induction.

(d) Every manufacturer of new motor vehicle engines subject to the standards prescribed in this section shall, prior to taking any of the actions specified in section 203(a)(1) of the Act, test or cause to be tested motor vehicle engines in accordance with applicable

procedures in subpart I or N of this part to ascertain that such test engines meet the requirements of paragraphs (a), (b), and (c) and (d) of this section.

(Secs. 202, 203, 206, 207, 208, 301a, Clean Air Act, as amended; 42 U.S.C. 7521, 7522, 7525, 7541, 7542, 7601a)

[50 FR 10654, Mar. 15, 1985, as amended at 54 FR 14466, Apr. 11, 1989; 57 FR 19538, May 7, 1992; 58 FR 15799, Mar. 24, 1993; 59 FR 48497, Sept. 21, 1994; 62 FR 47120, Sept. 5, 1997]

§ 86.094–13 Light-duty exhaust durability programs.

(a)(1) This section describes the various durability programs available to manufacturers for determining exhaust deterioration factors (DFs) for the certification of 1994 and beyond model year light-duty vehicles and light-duty trucks. While this section describes many of the important elements of these durability programs, it is not intended as an exhaustive list of all requirements applicable either to these programs or to the certification process.

(2) The durability programs consist of various elements, such as a statement of applicability, a service accumulation method, vehicle/component selection methods, durability data vehicle compliance requirements, in-use verification requirements, optional elements, data reporting requirements, and additional requirements. Cross references to other sections in this subpart are indicated where appropriate.

(b) The following table summarizes the durability programs available to all manufacturers of light-duty vehicles and light-duty trucks. The Tier 1 and Tier 0 standards cited in the table are those specified in § 86.094–8 (for light-duty vehicles) and § 86.094–9 (for light-duty trucks). The durability programs described in this section are separate and distinct alternatives, such that determination of an exhaust deterioration factor under one program does not require compliance with the requirements of a different durability program.

Class	Standards	Durability program name	Optional elements
Light-duty Vehicles	Tier 1	Standard AMA	Carryover. Extrapolation. Substitute AMA.
		Production AMA	Carryover. Extrapolation. Substitute AMA.
		Alternative Service Accumulation	Carryover.
	Tier 0	Standard AMA	Carryover. Substitute AMA.
		Production AMA	Carryover. Substitute AMA.
		Alternative Service Accumulation	Carryover.
Light-duty Trucks	Tier 1 & Tier 0	Standard Self-Approval	Carryover.
		Alternative Service Accumulation	Carryover.

(c) *Standard AMA durability program*—(1) *Applicability*. The standard AMA durability program is applicable to light-duty vehicles in model years 1994 and beyond.

(2) *Service accumulation method*. The method shall be mileage accumulation performed on whole durability data vehicles, using the Durability Driving Schedule (commonly referred to as the AMA schedule) specified in appendix IV to this part. The provisions of § 86.094–26(a), which include vehicle weight requirements, the duration of mileage accumulation, and the specification of emission tests to be performed during the mileage accumulation, shall apply. Scheduled and unscheduled maintenance may be performed on the vehicle in accordance with the provisions of § 86.094–25.

(3) *Vehicle/component selection method*. Durability data vehicles shall be selected by the Administrator as required in § 86.090–22(a) and in accordance with the provisions of § 86.094–24(c)(1). Typically, the Administrator selects one durability data vehicle to represent each engine-system combination. The selection of durability data vehicles is also governed by § 86.091–7(a)(2)(i)(A), which generally requires

that vehicles used for certification must be representative of production vehicles.

(4) *Durability data vehicle compliance requirements.* Durability data vehicle compliance requirements for the Standard AMA Durability Program are contained in § 86.094–28(a). These include the method of calculating deterioration factors, line crossing criteria, and related requirements.

(5) *In-use verification.* Manufacturer testing of in-use vehicles subsequent to certification is not a requirement of the Standard AMA Durability Program.

(6) *Optional elements*—(i) *Extrapolation.* Manufacturers selecting the Standard AMA Durability Program may petition the Administrator for the use of extrapolated mileage accumulation data according to the provisions of § 86.094–26(a)(4) for use in certifying light-duty vehicles to the Tier 1 standards of § 86.094–8. If use of extrapolated data is approved, deterioration factors are determined by the method of linear extrapolation described in § 86.094–28(a)(4)(i).

(ii) *Substitute AMA.* Manufacturers selecting the Standard AMA Durability Program may petition the Administrator under § 86.094–26(a)(2)(ii) to substitute a different whole-vehicle mileage accumulation schedule for the Durability Driving Schedule (standard AMA) specified in appendix IV to this part.

(iii) *Carryover and carryacross.* Manufacturers selecting the Standard AMA Durability Program may petition. the Administrator for the use of carryover or carryacross mileage accumulation data according to the provisions of § 86.094–24(f). If use of carryover or carryacross data is approved, deterioration factors are determined by the method of linear extrapolation described in § 86.094–28(a)(4)(i).

(7) *Data reporting requirements.* Data reporting requirements for the Standard AMA Durability Program are contained in §§ 86.094–21, 86.094–23(b)(1)(i), and 86.094–26 (a)(6)(ii) and (a)(7).

(d) *Production AMA durability program*—(1) *Applicability.* The production AMA durability program is applicable to light-duty vehicles in model years 1994 and beyond.

(2) *Service accumulation method.* The method shall be mileage accumulation performed on whole durability data vehicles, using the Durability Driving Schedule (commonly referred to as the AMA schedule) specified in appendix IV to this part. The provisions of § 86.094–26(a), which include vehicle weight requirements, the duration of mileage accumulation, and the specification of emission tests to be performed during the mileage accumulation, shall apply. Scheduled and unscheduled maintenance may be performed on the vehicle in accordance with the provisions of § 86.094–25.

(3) *Vehicle/component selection method.* Durability data vehicles shall be selected by the Administrator as required in § 86.090–22(a) and in accordance with the provisions of § 86.094–24(h). Typically, the Administrator selects several random production durability data vehicles, up to a maximum of three vehicles per engine family group.

(4) *Durability data vehicle compliance requirements.* Durability data vehicle compliance requirements for the Production AMA Durability Program are contained in § 86.094–28(a)(7). These include the method of calculating deterioration factors, line crossing criteria, and related requirements.

(5) *In-use verification.* The Production AMA Durability Program includes no requirement for manufacturer testing of in-use vehicles subsequent to certification.

(6) *Optional elements*—(i) *Extrapolation.* Manufacturers selecting the Production AMA Durability Program may petition the Administrator for the use of extrapolated mileage accumulation data according to the provisions of § 86.094–26(a)(4) for use in certifying light-duty vehicles to the Tier I standards of § 86.094–8. If use of extrapolated data is approved, deterioration factors are determined by the method of linear extrapolation described in § 86.094–28(a)(7)(ii)(B).

(ii) *Substitute AMA.* Manufacturers selecting the Production AMA Durability Program may petition the Administrator under § 86.094–26(a)(2)(ii) to substitute a different whole-vehicle mileage accumulation schedule for the Durability Driving Schedule (standard

AMA) specified in appendix IV to this part.

(iii) *Carryover and carryacross.* Manufacturers selecting the Production AMA Durability Program may petition the Administrator for the use of carryover or carryacross mileage accumulation data according to the provisions of § 86.094–24(h)(1)(v). If use of carryover or carryacross data is approved, deterioration factors are determined by the method of linear extrapolation described in § 86.094–28(a)(7)(ii)(B).

(7) Data reporting requirements for the Production AMA Durability Program are contained in §§ 86.094–21, 86.094–23(b)(1)(i), and 86.094–26 (a)(6)(ii) and (a)(7).

(8) *Additional requirements.* (i) For engine families subject to the procedures of the Production AMA Durability Program, the manufacturer shall submit deterioration factors to the Administrator for approval to use them for certification. The Administrator shall approve the use of deterioration factors that:

(A) The manufacturer attests are representative of the durability performance of its vehicles in actual field use when maintained according to the manufacturer's maintenance instructions (as limited under § 86.094–25(a)); and

(B) Are equal to or greater than the deterioration factors that EPA determines under paragraph (d)(8)(ii) of this section.

(ii) EPA shall determine minimum deterioration factors for engine families subject to the Production AMA Durability Program. This determination shall be based on a procedure of grouping engine families (see § 86.094–24(a)) in order to use historical certification data to determine deterioration factors for each engine family group. The historical data shall be updated yearly through the testing of production durability data vehicles. Test vehicle requirements under these procedures are contained in § 86.094–24 (h) and compliance requirements are contained in § 86.094–28(a)(7).

(iii) *Request procedures.* (A) A manufacturer wishing to participate in the Production AMA Durability Program must submit to the Administrator, for each model year, a written request describing the engine families that the manufacturer elects to be included in the program.

(B) The Administrator may declare ineligible any engine family for which the Administrator determines there is unreasonable risk in determining a deterioration factor using the methods of the Production AMA Durability Program. Furthermore, the Administrator may limit the number of engine families within the manufacturer's product line that are eligible for the Production AMA Durability Program.

(C) Upon approval of the manufacturer's request to participate, the Administrator and the manufacturer may enter into a written agreement prescribing the terms and conditions of the program. This agreement shall be equitable as compared to agreements entered into with other manufacturers. The agreement shall specify:

(*1*) The engine families to be included in the program and the engine family groups that have been established by the provisions of § 86.094–24(a) (8) and (9);

(*2*) The procedures for the selection of production durability data vehicles specified under the provisions of § 86.094–24(h); and

(*3*) The procedures for the determination of minimum exhaust emission deterioration factors for each engine family group.

(iv) *Withdrawal from Production AMA Durability Program.* (A) Subject to the conditions of paragraphs (d)(8)(iv) (B) through (F) of this section, a manufacturer may, at any time, withdraw all of its product line or separate engine family groups from this program. Only entire engine family groups may be withdrawn.

(B) Once any engine family in an engine family group is certified using deterioration factors determined in the Production AMA Durability Program, the manufacturer shall operate and test the production durability data vehicles specified in § 86.094–24(h) in accordance with the procedures of this part.

(C) The Administrator shall notify the manufacturer if a nonconformity of a category of vehicles within the engine family group is indicated by the production durability data. For the

purpose of this paragraph, a nonconformity is determined to exist if:

(*1*) Any emission data vehicle within an engine family of the model year most recently certified under the production AMA Durability Program is projected to exceed an emission standard by applying deterioration factors generated by a production durability data vehicle within the same engine family; or

(*2*) Any of the most recent model year's production durability data vehicle configurations tested under paragraph (d)(8)(iv)(B) of this section line crosses as defined in § 86.094–28(a)(7)(ii)(C). For the purpose of this paragraph, data from identical vehicles will be averaged as under § 86.094–28(a)(4)(i) (A) and (B)

(D) If the Administrator notifies a manufacturer of such a nonconformity, the manufacturer shall submit, by a date specified by the Administrator, a plan to remedy the nonconformity which is acceptable to the Director, Office of Mobile Sources. For the purpose of this paragraph, the term ''remedy the nonconformity'' will have the same meaning as it does when it appears in section 207(c)(1) of the Clean Air Act (42 U.S.C. 7541(c)(1)).

(E) The manufacturer shall comply with the terms of the remedial plan approved by the Director, Office of Mobile Sources.

(F) If a manufacturer does not comply with the requirements of paragraph (d)(8)(iv) (B), (D), or (E) of this section, the Administrator may deem the certificate of conformity for the affected engine families void *ab initio*.

(e) *Alternative Service Accumulation Durability Program*—(1) *Applicability*. The Alternative Service Accumulation Durability Program is applicable to light-duty vehicles and light-duty trucks in model years 1994 and beyond.

(2) *Service accumulation method*. (i) The manufacturer shall propose a service accumulation method for the Alternative Service Accumulation Durability Program, for advance approval by the Administrator. The method shall be consistent with good engineering practice and be designed to accurately predict the deterioration of the vehicle's emissions in actual use over its full useful life.

(ii) Manufacturers may propose service accumulation methods based upon whole-vehicle mileage accumulation, bench aging of individual components or systems, or a combination of the two approaches. Bench procedures should simulate the aging of components or systems over the applicable durability useful life as defined in § 86.094–2 and should simulate cycles and environments found in actual use. For this purpose, manufacturers may remove the emission-related components, in whole or in part, from the durability vehicle itself and deteriorate them independently. Vehicle testing for the purpose of determining deterioration factors may include the testing of durability vehicles that incorporate such bench-aged components.

(iii) Service accumulation shall be according to the method approved in advance by the Administrator.

(3) *Vehicle/component selection method*. The manufacturer shall propose a vehicle/component selection method for the Alternative Service Accumulation Durability Program for advance approval by the Administrator. The vehicle/component selection shall be according to the method approved in advance by the Administrator. The selection of durability data vehicles and components is also governed by § 86.091–7(a)(2)(i)(A), which generally requires that vehicles and components used for certification must be representative of production vehicles and components.

(4) *Durability data vehicle compliance requirements*. The manufacturer shall propose procedures for the calculation of deterioration factors and for the determination of vehicle compliance for advance approval by the Administrator. The Administrator may approve the use of such procedures if the manufacturer demonstrates that the resulting deterioration factors are likely to be representative of the in-use performance of the vehicles. The calculation of deterioration factors and the determination of vehicle compliance shall be according to the procedures approved in advance by the Administrator.

(5) *In-use verification*. Manufacturers selecting the Alternative Service Accumulation Durability Program shall agree to perform an in-use verification

program, which shall include testing on in-use vehicles certified under the program in the years subsequent to certification. The purpose of the in-use verification program is to confirm the adequacy of the manufacturer-designed components of the Alternative Service Accumulation Durability program. The manufacturer shall propose sample sizes, recruitment procedures, testing procedures, optional provisions for the cessation of testing in the event the in-use testing confirms the adequacy of elements of the Alternative Service Accumulation Durability Program, and remedies in the event the in-use testing fails to confirm the adequacy of elements of the Alternative Service Accumulation Durability program. These and other elements of in-use verification are subject to advance approval by the Administrator.

(6) *Optional element: Carryover and carryacross.* Manufacturers selecting the Alternative Service Accumulation Durability Program may petition the Administrator for the conditional use of carryover or carryacross mileage accumulation data according to the provisions of § 86.094–24(f). If use of carryover or carryacross data is approved, deterioration factors are determined by the method described in paragraph (e)(4) of this section.

(7) *Data reporting requirements.* (i) Data reporting requirements for the Alternative Service Accumulation Durability Program are contained in §§ 86.094–21, 86.094–23(b)(1)(i), and 86.094–26(a)(6)(ii) and (a)(7).

(ii) In addition to the reporting of deterioration factors determined under paragraph (e)(4) of this section, the manufacturer shall provide reliability data that shows to the Administrator's satisfaction that all emission-related components are designed to operate properly for the durability useful life of the vehicles in actual use (or such shorter intervals as permitted in section § 86.094–25).

(8) *Additional requirements.* (i) The manufacturer shall consolidate the approved versions for each of the required elements of the Alternative Service Accumulation Durability Program into a written agreement that documents the details of the program and the manufacturer's responsibilities. The manufacturer shall submit this agreement for approval by the Administrator as part of the application for certification.

(ii) The manufacturer may amend the written agreement entered into pursuant to paragraph (e)(8)(i) of this section so long as the manufacturer demonstrates to the satisfaction of the Administrator that the proposed amendments to the agreement improve upon the in-use verification portion of the existing agreement. Such amendment to the Alternative Service Accumulation Durability Program agreement is subject to the prior approval of the Administrator.

(iii) The certification requirements described in § 86.094–30(a)(14) are applicable.

(f) *Standard Self-Approval Durability Program*—(1) *Applicability.* The Standard Self-Approval Durability Program is applicable to light-duty trucks in the 1994 and beyond model years.

(2) *Service accumulation method.* The manufacturer shall determine the form and extent of service accumulation used in the Standard Self-Approval Durability Program, according to the provisions of § 86.094–26(b)(2). The method shall be consistent with good engineering practice and be designed to evaluate the mechanisms that are expected to cause deterioration of the vehicle's emissions over its full useful life.

(3) *Vehicle/component selection method.* The manufacturer shall determine the vehicle/component selection method for use in the Standard Self-Approval Durability Program according to the provisions of § 86.094–24(c)(2). Manufacturers shall select the vehicles, engines, subsystems, or components for each engine-system so that their emissions deterioration characteristics may be expected to represent those of in-use vehicles, based on good engineering judgment. The selection of durability data vehicles or components is also governed by § 86.091–7(a)(2)(A), which generally requires that vehicles and components used for certification must be representative of production vehicles and components.

(4) *Durability data vehicle compliance requirements.* Durability data vehicle compliance requirements for the

Standard Self-approval Durability Program are contained in § 86.094–28(b). These include the method of calculating deterioration factors and related requirements.

(5) *In-use verification*. The Standard Self-Approval Durability Program includes no requirement for manufacturer testing of in-use vehicles subsequent to certification.

(6) *Data reporting requirements*. Data reporting requirements for the Standard Self-Approval Durability Program are contained in §§ 86.094–21, 86.094–23(b)(1)(ii), and 86.094–26(d).

(7) *Additional requirement*. The Administrator does not approve the test procedures for establishing exhaust emission deterioration factors. The manufacturer shall submit these procedures and determinations as required in § 86.094–21(b)(5)(i)(A).

(g) *Assigned deterioration factor durability program*—(1) *Applicability*—(i) *Small volume manufacturers*. The Assigned Deterioration Factor Durability Program is applicable to light-duty vehicles and light-duty trucks certified under the small volume manufacturer provisions of §§ 86.094–1(e) and 86.094–14(b).

(ii) *Small volume engine families*. The Assigned Deterioration Factor Durability Program is available to light-duty vehicles and light-duty trucks certified under the small volume engine family provisions of § 86.094–24(e)(2).

(2) *Determination of deterioration factors*. No service accumulation method or vehicle/component selection method is required. Deterioration factors are proposed by the manufacturer or assigned by the Administrator based on the provisions of § 86.094–14(c)(7)(i)(C).

(3) *In-use verification*. The Assigned Deterioration Factor Durability Program includes no requirement for manufacturer testing of in-use vehicles subsequent to certification.

(4) *Data reporting requirements*. Data reporting requirements for the Assigned Deterioration Factor Durability Program are contained in § 86.094–14 (c)(4), (c)(6), and (c)(11)(ii).

[58 FR 4002, Jan. 12, 1993, as amended at 59 FR 36369, July 18, 1994; 62 FR 11082, Mar. 11, 1997; 62 FR 44875, Aug. 22, 1997]

§ 86.094–14 Small-volume manufacturers certification procedures.

(a)(1) The small-volume manufacturers certification procedures described in paragraphs (b) and (c) of this section are optional. Small-volume manufacturers may use these optional procedures to demonstrate compliance with the general standards and specific emission requirements contained in this subpart.

(2) To satisfy the durability data requirements of the small-volume manufacturers certification procedures, manufacturers of vehicles (or engines) as described in paragraph (b) of this section may use assigned deterioration factors that the Administrator determines by methods described in paragraph (c)(7)(i)(C) of this section. However, if no deterioration factor data (either the manufacturer's or industry-wide deterioration factor data) are available from previously completed durability data vehicles or engines used for certification, manufacturers of vehicles (or engines) as described in paragraph (b) of this section or with new technology not previously certified may use assigned deterioration factors that the Administrator determines by alternative methods, based on good engineering judgement. The factors that the Administrator determines by alternative methods will be published in an advisory letter or advisory circular.

(b)(1) The optional small-volume manufacturers certification procedures apply to light-duty vehicles, light-duty trucks, heavy-duty vehicles, and heavy-duty engines produced by manufacturers with U.S. sales, including all vehicles and engines imported under the provisions of §§ 85.1505 and 85.1509 of this chapter (for the model year in which certification is sought) of fewer than 10,000 units (Light-Duty Vehicles, Light-Duty Trucks, Heavy-Duty Vehicles and Heavy-Duty Engines combined).

(2) For the purpose of determining the applicability of paragraph (b)(1) of this section, the sales the Administrator shall use shall be the aggregate of the projected or actual sales of those vehicles and/or engines in any of these groupings:

(i) Vehicles and/or engines produced by two or more firms, one of which is 10 percent or greater part owned by another;

(ii) Vehicles and/or engines produced by any two or more firms if a third party has equity ownership of 10 percent or more in each of the firms;

(iii) Vehicles and/or engines produced by two or more firms having a common corporate officer(s) who is (are) responsible for the overall direction of the companies;

(iv) Vehicles and/or engines imported or distributed by all firms where the vehicles and/or engines are manufactured by the same entity and the importer or distributor is an authorized agent of the entity.

(3) If the aggregated sales, as determined in paragraph (b)(2) of this section are less than 301 units, the manufacturers in the aggregated relationship may certify under the provisions in this section that apply to manufacturers with sales of less than 301 units.

(4) If the aggregated sales, as determined in paragraph (b)(2) of this section are greater than 300 but fewer than 10,000 units, the manufacturers in the aggregated relationship may certify under the provisions in this section that apply to manufacturers with sales from and including 301 through 9,999 motor vehicles and motor vehicles engines per year.

(5) If the aggregated sales, as determined in paragraph (b)(2) of this section are equal to or greater than 10,000 units, then the manufacturers involved in the aggregated relationship will be allowed to certify a number of units under the small-volume engine family certification procedures (reference § 86.094–24(e)) in accordance with the criteria identified in paragraphs (b)(5)(i) through (iii) of this section.

(i) If a manufacturer purchases less than 50 percent of another manufacturer, each manufacturer retains its right to certify 9,999 units using the small-volume engine family certification procedures.

(ii) If a manufacturer purchases 50 percent or more of another manufacturer, the manufacturer with the over 50 percent interest must share, with the manufacturer it purchased, its 9,999 units under the small-volume engine family certification procedures.

(iii) In a joint venture arrangement (50/50 ownership) between two manufacturers, each manufacturer retains its eligibility for 9,999 units under the small-volume engine family certification procedures, but the joint venture must draw its maximum 9,999 units from the units allocated to its parent manufacturers.

(c) Small-volume manufacturers shall demonstrate compliance with the applicable sections of this subpart. The appropriate model year of the applicable sections detailed in paragraphs (c)(1) through (15) of this section shall be determined in accordance with § 86.084–4.

(1) Sections 86.094–1, 86.094–2, 86.094–3, 86.084–4, 86.090–5, 86.078–6, 86.094–7, 86.094–8, 86.094–9, and 86.094–11 are applicable.

(2) Section 86.080–12 is not applicable.

(3) Sections 86.094–13, 86.094–14, 86.084–15, and 86.085–20 are applicable.

(4) Small-volume manufacturers shall include in their records all of the information that EPA requires in § 86.094–21. This information will be considered part of the manufacturer's application for certification. However, the manufacturer is not required to submit the information to the Administrator unless the Administrator requests it.

(5) Section 86.094–22 is applicable except as noted in paragraph (c)(5)(i) of this section.

(i) Small-volume light-duty vehicle and light-duty truck manufacturers may satisfy the requirements of § 86.094–22(e) by including a statement of compliance on adjustable parameters in the application for certification. In the statement of compliance the manufacturer shall state that the limits, stops, seals, or other means used to inhibit adjustment have been designed to accomplish their intended purpose based on good engineering practice and past experience. If the vehicle parameter is adjustable the vehicle must meet emission standards with the parameter set any place within the adjustable range (reference § 86.094–21).

(ii) [Reserved]

(6) Section 86.094–23 is applicable.

(7) Section 86.094–24 is applicable except as noted in paragraphs (c)(7) (i) through (ii) of this section.

(i) Small-volume manufacturers may satisfy the requirements of § 86.094–24 (b) and (c) in accordance with paragraphs (c)(7)(i) (A) through (C) of this section.

(A) *Emission data.* Selecting one emission data test vehicle (engine) per engine family by the worst-case emissions criteria in accordance with paragraph (c)(7)(i)(A) (*1*), (*2*), or (*3*) of this section.

(*1*) *Light-duty vehicles and light-duty trucks.* The manufacturer shall select the vehicle with the heaviest equivalent test weight (including options) within the engine family. Then within that vehicle the manufacturer shall select, in the order listed, the highest road load power, largest displacement, the transmission with the highest numerical final gear ratio (including overdrive), the highest numerical axle ratio offered in the engine family, and the maximum fuel flow calibration.

(*2*) *Heavy-duty Otto-cycle engines.* The manufacturer shall select one emission data engine first based on the largest displacement within the engine family. Then within the largest displacement the manufacturer shall select, in the order listed, highest fuel flow at the speed of maximum rated torque, the engine with the most advanced spark timing, no EGR or lowest EGR flow, and no air pump or lowest actual flow air pump.

(*3*) *Heavy-duty diesel engines.* The manufacturer shall select one emission data engine based on the highest fuel feed per stroke, primarily at the speed of maximum rated torque and secondarily at rated speed.

(B) Testing light-duty vehicles or light-duty truck emission data vehicles at any service accumulation distance of at least 2,000 miles (3,219 kilometers) or, catalyst equipped heavy-duty emission data engines at any service accumulation time of at least 62 hours, or non-catalyst equipped heavy-duty engine emission data engines at any service accumulation time determined by the manufacturer to result in stabilized emissions. The emission performance of the emission data vehicle or engine must be stabilized prior to emission testing.

(C) *Durability data.* Satisfying the durability data requirements by complying with the applicable procedures described in paragraphs (c)(7)(i)(C) (*1*) through (*4*) of this section.

(*1*) Manufacturers with aggregated sales of less than 301 motor vehicles and motor vehicle engines per year may use assigned deterioration factors that the Administrator determines and prescribes. The factors will be the Administrator's estimate, periodically updated and published in an advisory letter or advisory circular, of the 70th percentile deterioration factors calculated using the industry-wide data base of previously completed durability data vehicles or engines used for certification. However, the manufacturer may, at its option, accumulate miles (hours) on a durability data vehicle (engine) and complete emission tests for the purpose of establishing its own deterioration factors.

(*2*)(*i*) Manufacturers with aggregated sales from and including 301 through 9,999 motor vehicles and motor vehicle engines per year certifying light-duty vehicle exhaust emissions from vehicles equipped with proven emission control systems shall use assigned deterioration factors that the manufacturer determines based on its good engineering judgment. However, the manufacturer may not use deterioration factors less than either the average or 70th percentile of all of that manufacturer's deterioration factor data, whichever is less. These minimum deterioration factors shall be calculated according to procedures in paragraph (c)(7)(i)(C)(*2*)(*ii*), of this section. If the manufacturer does not have at least two data points to calculate these manufacturer specific average deterioration factors, then the deterioration factors shall be no less than the EPA supplied industry-wide deterioration factors. However, the manufacturer may, at its option, accumulate miles on a durability data vehicle and complete emission tests for the purpose of establishing its own deterioration factors.

(*ii*) The manufacturer's minimum deterioration factors shall be calculated using the deterioration factors from all

engine families, within the same vehicle/engine-fuel usage category (e.g., gasoline-fueled light-duty vehicle, etc.) previously certified to the same emission standards. The manufacturer shall use only deterioration factors from engine families previously certified by the manufacturer and the deterioration factors shall not be included in the calculation more than once. The deterioration factors for each pollutant shall be calculated separately. The manufacturer may, at its option, limit the deterioration factors used in the calculation of the manufacturer's minimum deterioration factors to those from all similar systems to the system being certified if sufficient data (i.e., from at least two certified systems) exists. All data eligible to be grouped as similar system data shall be used in calculating similar system deterioration factors. Any deterioration factors used in calculating similar system deterioration factors shall not be included in calculating the manufacturer's minimum deterioration factors used to certify any of the manufacturer's remaining vehicle systems.

(*3*) Manufacturers with aggregated sales from 301 through 9,999 motor vehicles and motor vehicle engines and certifying light-duty vehicle exhaust emissions from vehicles equipped with unproven emission control systems shall use deterioration factors that the manufacturer determines from official certification durability data generated by vehicles from engine families representing a minimum of 25 percent of the manufacturer's sales equipped with unproven emission control systems. The sales projections are to be based on total sales projected for each engine/system combination. The durability programs applicable to such manufacturers for this purpose shall be the Standard AMA, the Production AMA and the Alternative Service Accumulation Durability Programs of § 86.094–13. The durability data vehicle (engine) mileage accumulation and emission tests are to be conducted in accordance with § 86.094–13. The manufacturer must develop deterioration factors by generating durability data in accordance with § 86.094–13 on a minimum of 25 percent of the manufacturer's projected sales (by engine/system combination) that is equipped with unproven emission control systems. The manufacturer must complete the 25 percent durability requirement before the remainder of the manufacturer's sales equipped with unproven emission control systems is certified using manufacturer-determined assigned deterioration factors. Alternatively, any of these manufacturers may, at their option, accumulate miles on durability data vehicles and complete emission tests for the purpose of establishing their own deterioration factors on the remaining sales.

(*4*) For light-duty vehicle, light-duty truck, and heavy-duty vehicle evaporative emissions and for light-duty truck, and heavy-duty engine exhaust emissions, deterioration factors shall be determined in accordance with § 86.094–24.

(ii) Section 86.094–24(d) and (e) are not applicable.

(8) Section 86.094–25 is applicable to maintenance performed on durability data light-duty vehicles, light-duty trucks, heavy-duty vehicles, and heavy-duty engines when the manufacturer completes durability data vehicles or engines; § 86.087–38 is applicable to the recommended maintenance the manufacturer includes in the maintenance instructions furnished the purchasers of new motor vehicles and new motor vehicle engines under § 86.087–38.

(9)(i) Section 86.094–26 is applicable if the manufacturer completes durability data vehicles or engines.

(ii) Section 86.090–27 is applicable.

(10) Sections 86.094–28 and 86.091–29 are applicable.

(11)(i) Section 86.094–30 is applicable, except for § 86.094–30 (a)(2) and (b). In the place of § 86.094–30 (a)(2) and (b), small-volume manufacturers shall comply with paragraphs (c)(11) (ii) through (v) of this section.

(ii) Small-volume manufacturers shall submit an application for certification containing the elements contained in paragraphs (c)(11)(ii) (A) through (E) of this section.

(A) The names, addresses, and telephone numbers of the persons the manufacturer authorizes to communicate with us.

(B) A brief description of the vehicles (or engines) covered by the certificate

(the manufacturers' sales data book or advertising, including specifications, may satisfy this requirement for most manufacturers). The description shall include, as a minimum, the items listed in paragraphs (c)(11)(ii)(B) (*1*) through (*18*) of this section as applicable.

(*1*) Engine evaporative family names and vehicle (or engine) configurations.

(*2*) Vehicle carlines or engine models to be listed on the certificate of conformity.

(*3*) The test weight and horsepower setting for each vehicle or engine configuration.

(*4*) Projected sales.

(*5*) Combustion cycle.

(*6*) Cooling mechanism.

(*7*) Number of cylinders.

(*8*) Displacement.

(*9*) Fuel system type.

(*10*) Number of catalytic converters, type, volume, composition, surface area, and total precious metal loading.

(*11*) Method of air aspiration.

(*12*) Thermal reactor characteristics.

(*13*) Suppliers' and/or manufacturers' name and model number of any emission related items of the above, if purchased from a supplier who uses the items in its own certified vehicles(s) or engine(s).

(*14*) A list of emission component part numbers.

(*15*) Drawings, calibration curves, and descriptions of emission related components, including those components regulated under § 86.085–22(e), and schematics of hoses and other devices connecting these components.

(*16*) Vehicle adjustments or modifications necessary for light-duty trucks to assure that they conform to high-altitude standards.

(*17*) A description of the light-duty vehicles and light-duty trucks which are exempted from the high-altitude emission standards.

(*18*) Proof that the manufacturer has obtained or entered an agreement to purchase, when applicable, the insurance policy, required by § 85.1510(b) of this chapter. The manufacturer may submit a copy of the insurance policy or purchase agreement as proof that the manufacturer has obtained or entered an agreement to purchase the insurance policy.

(C) The results of all emission tests the manufacturer performs to demonstrate compliance with the applicable standards.

(D)(*1*) The following statement signed by the authorized representative of the manufacturer: ''The vehicles (or engines) described herein have been tested in accordance with (list of the applicable subparts A, B, D, I, M, N, or P) of part 86, title 40, Code of Federal Regulations, and on the basis of those tests are in conformance with that subpart. All of the data and records required by that subpart are on file and are available for inspection by the EPA Administrator. We project the total U.S. sales of vehicles (engines) subject to this subpart (including all vehicles and engines imported under the provisions of §§ 85.1505 and 85.1509 of this chapter to be fewer than 10,000 units.''

(*2*) A statement as required by and contained in paragraph (c)(5) of this section signed by the authorized representative of the manufacturer.

(*3*) A statement that the vehicles or engines described in the manufacturer's application for certification are not equipped with auxiliary emission control devices which can be classified as a defeat device as defined in § 86.094–2.

(*4*) A statement of compliance with section 206(a)(3) of the Clean Air Act (42 U.S.C. 7525(a)(3)).

(*5*) A statement that, based on the manufacturer's engineering evaluation and/or emission testing, the light-duty vehicles comply with emission standards at high altitude unless exempt under § 86.094–8(h).

(*6*) A statement that, based on the manufacturer's engineering evaluation and/or emission testing, the light-duty trucks sold for principle use at designated high-altitude locations comply with the high-altitude emission requirements and that all other light-duty trucks are at least capable of being modified to meet high-altitude standards unless exempt under § 86.094–9(g)(2).

(*7*) A statement affirming that the manufacturer will provide a list of emission and emission-related service parts, including part number designations and sources of parts, to the vehicle purchaser for all emission and

emission-related parts which might affect vehicle emission performance throughout the useful life of the vehicle. Secondly, it must state that qualified service facilities and emission-related repair parts will be conveniently available to serve its vehicles. In addition, if service facilities are not available at the point of sale or distribution, the manufacturer must indicate that the vehicle purchaser will be provided information identifying the closest authorized service facility to the point of sale, if in the United States, or the closest authorized service facility to the point of distribution to the ultimate purchaser if the vehicle was purchased outside of the United States by the ultimate purchaser. Such information should also be made available to the Administrator upon request.

(E) Manufacturers utilizing deterioration factors determined by the manufacturer based on its good engineering judgment (reference paragraph (c)(7)(i)(C)(*2*) of this section) shall provide a description of the method(s) used by the manufacturer to determine the deterioration factors.

(iii) If the manufacturer meets the requirements of this subpart, the Administrator will issue a certificate of conformity for the vehicles or engines described in the application for certification.

(iv) The certificate will be issued for such a period not to exceed one model year as the Administrator may determine and upon such terms as he may deem necessary to assure that any vehicle or engine covered by the certificate will meet the requirements of the Act and of this subpart.

(v)(A) If, after a review of the statements and descriptions submitted by the manufacturer, the Administrator determines that the manufacturer has not met the applicable requirements, the Administrator shall notify the manufacturer in writing of his intention to deny certification, setting forth the basis for his determination. The manufacturer may request a hearing on the Administrator's determination.

(B) If the manufacturer does not request a hearing or present the required information, the Administrator will deny certification.

(12) Sections 86.079–31 and 86.079–32 are not applicable.

(13) Under § 86.079–33, small-volume manufacturers are covered by paragraphs (c)(13) (i) and (ii) of this section.

(i) Small-volume manufacturers may make production changes (running changes) without receiving the Administrator's prior approval. The manufacturer shall assure (by conducting emission tests as it deems necessary) that the affected vehicles (engines) remain in compliance with the requirements of this part.

(ii) The manufacturer shall notify the Administrator within seven days after implementing any production related change (running change) that would affect vehicle emissions. This notification shall include any changes to the information required under paragraph (c)(11)(ii) of this section. The manufacturer shall also amend as necessary its records required under paragraph (c)(4) of this section to confirm with the production design change.

(14) Section 86.082–34 is not applicable.

(15) Sections 86.094–35, 86.079–36, 86.085–37, 86.087–38 and 86.079–39 are applicable.

[58 FR 4006, Jan. 12, 1993, as amended at 61 FR 127, Jan. 3, 1996]

§ 86.094–15 NO_X and particulate averaging, trading, and banking for heavy-duty engines.

(a)(1) Heavy-duty engines eligible for NO_X and particulate averaging, trading and banking programs are described in the applicable emission standards sections in this subpart. All heavy-duty engine families which include any engines labeled for use in clean-fuel vehicles as specified in 40 CFR part 88 are not eligible for these programs. Participation in these programs is voluntary.

(2)(i) Engine families with FELs exceeding the applicable standard shall obtain emission credits in a mass amount sufficient to address the shortfall. Credits may be obtained from averaging, trading, or banking, within the averaging set restrictions described in this section.

(ii) Engine families with FELs below the applicable standard will have emission credits available to average, trade,

bank or a combination thereof. Credits may not be used for averaging or trading to offset emissions that exceed an FEL. Credits may not be used to remedy an in-use nonconformity determined by a Selective Enforcement Audit or by recall testing. However, credits may be used to allow subsequent production of engines for the family in question if the manufacturer elects to recertify to a higher FEL.

(iii) Credits scheduled to expire in the earliest model year shall be used, prior to using other available credits, to offset emissions of engine families with FELs exceeding the applicable standard.

(b) Participation in the NO_X and/or particulate averaging, trading, and banking programs shall be done as follows.

(1) During certification, the manufacturer shall:

(i) Declare its intent to include specific engine families in the averaging, trading and/or banking programs. Separate declarations are required for each program and for each pollutant (*i.e.*, NO_X and particulate).

(ii) Declare an FEL for each engine family participating in one or more of these three programs.

(A) The FEL must be to the same level of significant digits as the emission standard (one-tenth of a gram per brake horsepower for NO_X emissions and one-hundredth of a gram per brake horsepower-hour for particulate emissions).

(B) In no case may the FEL exceed the upper limit prescribed in the section concerning the applicable heavy-duty engine NO_X and particulate emission standards.

(iii) Calculate the projected emission credits (±) based on quarterly production projections for each participating family and for each pollutant (NO_X and particulate), using the applicable equation in paragraph (c) of this section and the applicable factors for the specific engine family.

(iv)(A) Determine and state the source of the needed credits according to quarterly projected production for engine families requiring credits for certification.

(B) State where the quarterly projected credits will be applied for engine families generating credits.

(C) Credits may be obtained from or applied to only engine families within the same averaging set as described in paragraphs (d) and (e) of this section. Credits available for averaging, trading, or banking as defined in § 86.090–2, may be applied exclusively to a given engine family, or reserved as defined in § 86.091–2.

(2) Based on this information each manufacturer's certification application must demonstrate:

(i) That at the end of model year production, each engine family has a net emissions credit balance of zero or more using the methodology in paragraph (c) of this section with any credits obtained from averaging, trading or banking.

(ii) The source of the credits to be used to comply with the emission standard if the FEL exceeds the standard, or where credits will be applied if the FEL is less than the emission standard. In cases where credits are being obtained, each engine family involved must state specifically the source (manufacturer/engine family) of the credits being used. In cases where credits are being generated/supplied, each engine family involved must state specifically the designated use (manufacturer/engine family or reserved) of the credits involved. All such reports shall include all credits involved in averaging, trading or banking.

(3) During the model year manufacturers must:

(i) Monitor projected versus actual production to be certain that compliance with the emission standards is achieved at the end of the model year.

(ii) Provide the end-of-model year reports required under § 86.091–23.

(iii) For manufacturers participating in emission credit trading, maintain the quarterly records required under § 86.091–7(c)(8).

(4) Projected credits based on information supplied in the certification application may be used to obtain a certificate of conformity. However, any such credits may be revoked based on review of end-of-model year reports,

follow-up audits, and any other compliance measures deemed appropriate by the Administrator.

(5) Compliance under averaging, banking, and trading will be determined at the end of the model year. Engine families without an adequate amount of NO_X and/or particulate emission credits will violate the conditions of the certificate of conformity. The certificates of conformity may be voided *ab initio* for engine families exceeding the emission standard.

(6) If EPA or the manufacturer determines that a reporting error occurred on an end-of-year report previously submitted to EPA under this section, the manufacturer's credits and credit calculations will be recalculated. Erroneous positive credits will be void. Erroneous negative balances may be adjusted by EPA for retroactive use.

(i) If EPA review of a manufacturer's end-of-year report indicates a credit shortfall, the manufacturer will be permitted to purchase the necessary credits to bring the credit balance for that engine family to zero, at the ratio of 1.2 credits purchased for every credit needed to bring the balance to zero. If sufficient credits are not available to bring the credit balance for the engine family in question to zero, EPA may void the certificate for that engine family *ab initio*.

(ii) If within 180 days of receipt of the manufacturer's end-of-year report, EPA review determines a reporting error in the manufacturer's favor (i.e. resulting in a positive credit balance) or if the manufacturer discovers such an error within 180 days of EPA receipt of the end-of-year report, the credits will be restored for use by the manufacturer.

(c)(1) For each participating engine family, NO_X and particulate emission credits (positive or negative) are to be calculated according to one of the following equations and rounded, in accordance with ASTM E29–67, to the nearest one-tenth of a Megagram (Mg). Consistent units are to be used throughout the equation.

For determining credit need for all engine families and credit availability for engine families generating credits for averaging programs only:

$$\text{Emission credits} = (\text{Std FEL}) \times (\text{CF}) \times (\text{UL}) \times (\text{Production}) \times (10^{-6})$$

For determining credit availability for engine families generating credits for trading or banking programs:

$$\text{Emission credits} = (\text{Std FEL}) \times (\text{CF}) \times (\text{UL}) \times (\text{Production}) \times (10^{-6}) \times (0.8)$$

Where:

Std = the current and applicable heavy-duty engine NO_X or particulate emission standard in grams per brake horsepower hour or grams per Megajoule.

FEL = the NO_X or particulate family emission limit for the engine family in grams per brake horsepower-hour or grams per Megajoule.

CF = a transient cycle conversion factor in BHP-hr/mi or MJ/mi, as given in paragraph (c)(2) of this section.

UL = the useful life, or alternative life as described in paragraph (f) of § 86.090–21, for the given engine family in miles.

Production = the number of engines produced for U.S. sales within the given engine family during the model year. Quarterly production projections are used for initial certification. Actual production is used for end-of-year compliance determination.

0.8 = a one-time discount applied to all credits to be banked or traded within the model year generated. Banked credits traded in a subsequent model year will not be subject to an additional discount. Banked credits used in a subsequent model year's averaging program will not have the discount restored.

(2) The transient cycle conversion factor is the total (integrated) cycle brake horsepower- hour or Megajoules, divided by the equivalent mileage of the applicable transient cycle. For Otto-cycle-heavy duty engines, the equivalent mileage is 6.3 miles. For diesel heavy-duty engines, the equivalent mileage is 6.5 miles. When more than one configuration is chosen by EPA to be tested in the certification of an engine family (as described in § 86.085–24), the conversion factor used is to be based upon the configuration generating the highest conversion factor when determining credit need for a family and the lowest conversion factor when determining credit availability from a family for banking, trading and averaging.

(d) *Averaging sets for NO_X emission credits:* The averaging and trading of

NO_X emission credits will only be allowed between heavy-duty engine families in the same averaging set and in the same regional category. Engines produced for sale in California constitute a separate regional category than engines produced for sale in the other 49 states. Banking and trading are not applicable to engines sold in California. The averaging sets for the averaging and trading of NO_X emission credits for heavy-duty engines are defined as follows:

(1) For Otto-cycle heavy-duty engines:

(i) Otto-cycle heavy-duty engines constitute an averaging set. Averaging and trading among all Otto-cycle heavy-duty engine families is allowed. There are no subclass restrictions.

(ii) Gasoline-fueled heavy-duty vehicles certified under the provisions of § 86.085–1 (b) may not average or trade credits with gasoline fueled heavy-duty Otto-cycle engines, but may average or trade credits with light-duty trucks.

(2) For diesel cycle heavy-duty engines:

(i) Each of the three primary intended service classes for heavy-duty diesel engines, as defined in § 86.090–2, constitute an averaging set. Averaging and trading among all diesel-cycle engine families within the same primary service class is allowed.

(ii) Urban buses are treated as members of the primary intended service class where they otherwise would fall.

(e) *Averaging sets for particulate emission credits.* The averaging and trading of particulate emission credits will only be allowed between diesel cycle heavy-duty engine families in the same averaging set and in the same regional category. Engines produced for sale in California constitute a separate regional category than engines produced for sale in the other 49 states. Banking and trading are not applicable to engines sold in California. The averaging sets for the averaging and trading of particulate emission credits for diesel cycle heavy-duty engines are defined as follows:

(1) Engines intended for use in urban buses constitute a separate averaging set from all other heavy-duty engines. Averaging and trading between diesel cycle bus engine families is allowed.

(2) For heavy-duty engines, exclusive of urban bus engines, each of the three primary intended service classes for heavy-duty diesel cycle engines, as defined in § 86.090–2, constitute an averaging set. Averaging and trading between diesel-cycle engine families within the same primary service class is allowed.

(3) Otto cycle engines may not participate in particulate averaging, trading, or banking.

(f) Banking of NO_X and particulate emission credits:

(1) *Credit deposits.* (i) NO_X and particulate emission credits may be banked from engine families produced in any model year.

(ii) Manufacturers may bank credits only after the end of the model year and after actual credits have been reported to EPA in the end-of-year report. During the model year and before submittal of the end-of-year report, credits originally designated in the certification process for banking will be considered reserved and may be redesignated for trading or averaging.

(2) *Credit withdrawals.* (i) After being generated, banked credits shall be available for use within three model years following the model year in which they were generated. Credits not used within the period specified above shall be forfeited.

(ii) Manufacturers withdrawing banked emission credits shall indicate so during certification and in their credit reports, as described in § 86.091–23.

(3) *Use of banked emission credits.* The use of banked credits shall be within the averaging set and other restrictions described in paragraphs (d) and (e) of this section, and only for the following purposes:

(i) Banked credits may be used in averaging, or in trading, or in any combination thereof, during the certification period. Credits declared for banking from the previous model year but not reported to EPA may also be used. However, if EPA finds that the reported credits can not be proven, they will be revoked and unavailable for use.

(ii) Banked credits may not be used for NO_X or particulate averaging and trading to offset emissions that exceed

an FEL. Banked credits may not be used to remedy an in-use nonconformity determined by a Selective Enforcement Audit or by recall testing. However, banked credits may be used for subsequent production of the engine family if the manufacturer elects to recertify to a higher FEL.

(g)(1) The following paragraphs assume NO_X and particulate nonconformance penalties (NCPs) will be available for the 1991 and later model year HDEs.

(2) Engine families using NO_X and/or particulate NCPs but not involved in averaging:

(i) May not generate either NO_X or particulate credits for banking and trading.

(ii) May not use either NO_X or particulate credits from banking and trading.

(3) If a manufacturer has any engine family to which application of NCPs and banking and trading credits is desired, that family must be separated into two distinct families. One family, whose FEL equals the standard, must use NCPs only while the other, whose FEL does not equal the standard, must use credits only.

(4) If a manufacturer has any engine family in a given averaging set which is using NO_X and/or particulate NCPs, none of that manufacturer's engine families in that averaging set may generate credits for banking and trading.

(h) In the event of a negative credit balance in a trading situation, both the buyer and the seller would be liable.

(i) Certification fuel used for credit generation must be of a type that is both available in use and expected to be used by the engine purchaser. Therefore, upon request by the Administrator, the engine manufacturer must provide information acceptable to the Administrator that the designated fuel is readily available commercially and would be used in customer service.

[55 FR 30627, July 26, 1990, as amended at 59 FR 14110, Mar. 25, 1994; 59 FR 50073, Sept. 30, 1994]

§ 86.094–16 Prohibition of defeat devices.

(a) No new gasoline-fueled light-duty vehicle or light-duty truck shall be equipped with a defeat device.

(b) The Administrator may test or require testing on any vehicle at a designated location, using driving cycles and conditions which may reasonably be expected to be encountered in normal operation and use, for the purposes of investigating a potential defeat device.

(c) For cold temperature CO emission control, the Administrator will use a guideline to determine the appropriateness of the CO emission control at ambient temperatures between 25 °F (−4 °C) and 68 °F (20 °C). The guideline for CO emission congruity across the intermediate temperature range is the linear interpolation between the CO standard applicable at 25 °F (−4 °C) and the CO standard applicable at 68 °F (20 °C). For vehicles that exceed this CO emissions guideline upon intermediate temperature cold testing:

(1) If the CO emission level is greater than the 20 °F (−7 °C) emission standard, the vehicle will automatically be considered to be equipped with a defeat device without further investigation.

(2) If the CO emission level does not exceed the 20 °F emission standard, the Administrator may investigate the vehicle design for the presence of a defeat device under paragraph (d) of this section.

(d) For vehicle designs designated by the Administrator to be investigated for possible defeat devices:

(1) The manufacturer must show to the satisfaction of the Administrator that the vehicle design does not incorporate strategies that unnecessarily reduce emission control effectiveness exhibited during the Federal emissions test procedure when the vehicle is operated under conditions which may reasonably be expected to be encountered in normal operation and use.

(2) Information Submissions Required:

(i) The manufacturer will provide an explanation containing detailed information (including information which the Administrator may request to be submitted) regarding test programs, engineering evaluations, design specifications, calibrations, on-board computer algorithms, and design strategies incorporated for operation both during and outside of the Federal emission test procedure.

(ii) For purposes of investigations of possible cold temperature CO defeat devices under this paragraph (d), the manufacturer shall provide an explanation which must show, to the satisfaction of the Administrator, that CO emissions are reasonably controlled in reference to the linear guideline, across the intermediate temperature range.

[57 FR 31900, July 17, 1992]

§ 86.094–17 Emission control diagnostic system for 1994 and later light-duty vehicles and light-duty trucks.

(a) All light-duty vehicles and light-duty trucks shall be equipped with an emission control diagnostic system capable of identifying, for each vehicle's useful life, the following types of deterioration or malfunction which could cause emission increases greater than or exceeding the following threshold levels as measured and calculated in accordance with test procedures set forth in subpart B of this part. Paragraphs (a)(2) and (a)(3) of this section do not apply to diesel cycle light-duty vehicles or light-duty trucks. Paragraphs (a)(1) through (a)(4) of this section do not apply to natural gas-fueled light-duty vehicles and light-duty trucks until the 1998 model year.

(1) Catalyst deterioration before it results in both an exhaust emission exceedance of 0.6 g/mi HC and an exhaust emission increase of 0.4 g/mi HC.

(2) Engine misfire before it results in an exhaust emission increase of greater than 0.4 g/mi HC, 3.4 g/mi CO, or 1.0 g/mi NO_X.

(3) Oxygen sensor deterioration before it results in an exhaust emission increase of greater than 0.2 g/mi HC, 1.7 g/mi CO, or 0.5 g/mi NO_X.

(4) Any other deterioration or malfunction within the powertrain which occurs in actual use and which results in an exhaust emission increase of greater than 0.2 g/mi HC, 1.7 g/mi CO, or 0.5 g/mi NO_X. or any vapor leak which results in an evaporative emissions increase of greater than 30.0 g/test measured over the first 24 hours of the diurnal portion of the revised evaporative emissions test procedure, in accordance with test procedures set forth in subpart B of this part, for vehicles certified to that test procedure.

(b)(1) The electronic evaporative emission purge control, if equipped, and all emission-related powertrain components connected to a computer shall, at a minimum, be monitored for circuit continuity. In lieu of monitoring circuit continuity, a functional system check may be performed provided the manufacturer can demonstrate that the functional check is equivalent or superior to the circuit continuity monitor. All components required by these regulations to be monitored shall be evaluated periodically, but no less frequently than once per Urban Dynamometer Driving Schedule as defined in appendix I, paragraph (a), of this part, or similar trip.

(2) For non-diesel cycle light-duty vehicles and light-duty trucks, the emission control diagnostic system shall at a minimum, monitor catalytic converters and oxygen sensors and shall detect misfiring cylinders.

(3) Oxygen sensor deterioration or malfunction which renders that sensor incapable of performing its function as part of the OBD system shall be identified on vehicles so equipped.

(c) The emission control diagnostic system shall incorporate a malfunction indicator light (MIL) readily visible to the vehicle operator. When illuminated, it shall display ''Check Engine,'' ''Service Engine Soon,'' or a similar phrase approved by the Administrator. A vehicle shall not be equipped with more than one general purpose malfunction indicator light for emission-related problems; separate specific purpose warning lights (e.g. brake system, fasten seat belt, oil pressure, etc.) are permitted. The use of red for the OBD-related malfunction indicator light is prohibited.

(d) The MIL shall illuminate and remain illuminated when any of the conditions specified in paragraphs (a) and (b) of this section are met, or whenever the engine control enters a default or secondary mode of operation. The MIL shall blink under any period of operation during which engine misfire is occurring at a level likely to cause catalyst damage as determined by the manufacturer. The MIL shall also illuminate when the vehicle's ignition is in

the ''key-on'' position before engine starting or cranking and extinguish after engine starting if no malfunction has previously been detected. If a fuel system or engine misfire malfunction has previously been detected, the MIL may be extinguished if the malfunction does not reoccur during three subsequent sequential trips during which engine speed is within 375 rpm, engine load is within 10 percent, and the engine's warm-up status is the same as that under which the malfunction was first detected, and no new malfunctions have been detected. If any malfunction other than a fuel system or engine misfire malfunction has been detected, the MIL may be extinguished if the malfunction does not reoccur during three subsequent sequential trips during which the monitoring system responsible for illuminating the MIL functions without detecting the malfunction, and no new malfunctions have been detected.

(e)(1) The emission control diagnostic system shall record code(s) indicating the status of the emission control system. Absent the presence of any fault codes, separate status codes shall be used to identify correctly functioning emission control systems and those emission control systems which need further vehicle operation to be fully evaluated. Fault codes shall be stored for deterioration or malfunction causing MIL illumination; the fault code shall identify the type of malfunction.

(2) For a single misfiring cylinder, the fault code(s) shall identify the cylinder, unless the manufacturer submits data and/or an engineering evaluation which adequately demonstrate that the misfiring cylinder cannot be reliably identified under certain operating conditions; multiple misfiring cylinders need not be uniquely identified if a distinct multiple misfire fault code is stored.

(3) A fault code shall be stored when the emission control system reverts to a default or secondary mode of operation.

(4) The diagnostic system may erase a fault code if the same fault is not reregistered in at least 40 engine warm-up cycles, and the malfunction indicator light (see paragraph (d) of this section) is not illuminated for that fault code.

(f) *Available Diagnostic Signals.* (1) Upon determination of the first malfunction of any component or system, ''freeze frame'' engine conditions present at the time shall be stored in computer memory. Should a subsequent fuel system or misfire malfunction occur, any previously stored freeze frame conditions shall be replaced by the fuel system or misfire conditions (whichever occurs first). Stored engine conditions shall include, but are not limited to: Engine speed, open or closed loop operation, fuel system commands, coolant temperature, calculated load value, fuel pressure, vehicle speed, air flow rate, and intake manifold pressure if the information needed to determine these conditions is available to the computer. For freeze frame storage, the manufacturer shall include the most appropriate set of conditions to facilitate effective repairs. If the fault code causing the conditions to be stored is erased in accordance with paragraph (c) of this section, the stored engine conditions may also be erased.

(2) The following signals in addition to the required freeze frame information shall be made available on demand through the serial port on the standardized data link connector, if the information is available to the on-board computer or can be determined using information available to the on-board computer: Diagnostic trouble codes, engine coolant temperature, fuel control system status (closed loop, open loop, other), fuel trim, ignition timing advance, intake air temperature, manifold air pressure, air flow rate, engine RPM, throttle position sensor output value, secondary air status (upstream, downstream, or atmosphere), calculated load value, vehicle speed, and fuel pressure. The signals shall be provided in standard units based on SAE specifications incorporated by reference in paragraph (h) of this section. Actual signals shall be clearly identified separately from default value or limp home signals. In addition, the capability to perform bi-directional diagnostic control based on SAE specifications shall be made available on demand through the serial port on the

standardized data link connector per SAE specifications as referenced in paragraph (h) of this section.

(3) For all emission control components and systems for which specific on-board evaluation tests are conducted (catalyst, oxygen sensor, etc.), the results of the most recent test performed by the vehicle, and the limits to which the system is compared shall be available through the data link per SAE J1979 specifications as referenced in paragraph (h) of this section beginning no later than the 1997 model year. The Administrator may allow a pass/fail indication for the most recent test results for those monitored components and systems for which such an indication is more appropriate (e.g., misfire detection, fuel system monitoring, etc.).

(4) The OBD requirements to which the vehicle is certified (i.e., California OBD II or Federal OBD), and the major emission control systems monitored by the OBD system consistent with paragraph (h)(3) of this section, shall be available through the serial data port on the standardized data link connector per SAE specifications as referenced in paragraph (h) of this section.

(g) The emission control diagnostic system is not required to evaluate components during malfunction conditions if such evaluation would result in a risk to safety or component failure.

(h) The emission control diagnostic system shall provide for standardized access and conform with the following Society of Automotive Engineers (SAE) standards. The following SAE documents are incorporated by reference. This incorporation by reference was approved by the Director of the Federal Register in accordance with 5 U.S.C. 552(a) and 1 CFR part 51. Copies of the SAE documents may be obtained from the Society of Automotive Engineers, Inc., 400 Commonwealth Drive, Warrendale, PA 15096–0001. Copies may be inspected at Docket No. A–90–35 at EPA's Air docket (LE–131), room 1500 M, 1st Floor, Waterside Mall, 401 M St., SW., Washington, DC, or at the National Archives and Records Administration (NARA). For information on the availability of this material at NARA, call 202–741–6030, or go to: *http://www.archives.gov/federal_register/code_of_federal_regulations/ibr_locations.html.*

(1) SAE J1850 ''Class B Data Communication Network Interface,'' (AUG91) shall be used as the on-board to off-board communications protocol. All emission related messages sent to the scan tool over a J1850 data link shall use the Cyclic Redundancy Check and the three byte header, and shall not use inter-byte separation or checksums.

(2) Basic diagnostic data (as specified in § 86.094–17(f)) shall be provided in the format and units in SAE J1979 ''E/E Diagnostic Test Modes,'' (DEC91). Basic bi-directional diagnostic capability shall be available and be consistent with SAE J1979 messages.

(3) Fault codes shall be consistent with SAE J2012 ''Recommended Format and Messages for Diagnostic Trouble Code Definitions,'' (MAR92) Part C.

(4) The connection interface between the OBD system and test equipment and diagnostic tools shall meet the functional requirements of SAE J1962 ''Diagnostic Connector,'' (JUN92).

(5) Limitation of Access—Any limitation of access to the diagnostic system shall be consistent with § 86.094–18. Access to vehicle calibration data, vehicle odometer, and keyless entry codes can be limited under the provisions of § 86.094.

(i) Upon application by the manufacturer, the Administrator may either waive the requirements of this section for specific components of any class or category of light-duty vehicles or light-duty trucks for model years 1994 or 1995 (or both), or through the 1999 model year, the Administrator may accept an OBD system as compliant even though specific requirements are not fully met. Such waivers or compliances without meeting specific requirements will be granted only if compliance would be infeasible or unreasonable considering such factors as, but not limited to, technical feasibility, lead time and production cycles including phase-in or phase-out of engines or vehicle designs and programmed upgrades of computers, and if any unmet requirements are not carried over from the previous model year except where unreasonable hardware modifications

would be necessary to correct the noncompliance, and the manufacturer has demonstrated an acceptable level of effort toward compliance as determined by the Administrator. For alternate fueled vehicles (i.e. natural gas, liquefied petroleum gas, or methanol), beginning with the model year for which alternate fuel emission standards are applicable and extending through the 1999 model year, manufacturers may request the Administrator to waive specific monitoring requirements of this section for which monitoring may not be reliable with respect to the use of the alternate fuel. At a minimum, all vehicles covered by this section, including those receiving a waiver as described in this paragraph, shall be equipped with an OBD system meeting either the California OBD I requirements, or some acceptable portion of the California OBD II or federal OBD requirements as specified in this section, except that for the 1994 and 1995 model years EPA may grant a waiver to a system less than OBD I giving consideration to such factors as manufacturer projections of very low sales volume for an engine family (e.g., 5000 or less), scheduled phase-out of significant engine technology with the 1994 or 1995 model years for that engine family, and whether or not the engine, or any similar engine within the manufacturer's product line, has ever been equipped with an OBD I or similar OBD system.

(j) Demonstration of compliance with California OBD II requirements (Title 13 California Code section 1968.1)as modified pursuant to California Mail Out #95–34 (September 26, 1995), shall satisfy the requirements of this section through the 1998 model year except that compliance with Title 13 California Code section 1968.1(d), pertaining to tampering protection, is not required to satisfy the requirements of this section.

[58 FR 9485, Feb. 19, 1993, as amended at 59 FR 48497, Sept. 21, 1994; 59 FR 15247, Mar. 23, 1995; 60 FR 37945, July 25, 1995; 60 FR 39266, Aug. 2, 1995; 61 FR 45903, Aug. 30, 1996; 63 FR 7719, Feb. 17, 1998]

§ 86.094–21 Application for certification.

(a) A separate application for a certificate of conformity shall be made for each set of standards (or family emission limits, as appropriate) and each class of new motor vehicles or new motor vehicle engines. Such application shall be made to the Administrator by the manufacturer and shall be updated and corrected by amendment.

(b) The application shall be in writing, signed by an authorized representative of the manufacturer, and shall include the following:

(1)(i) Identification and description of the vehicles (or engines) covered by the application and a description of their engine (vehicles only), emission control system, and fuel system components. This description will include:

(A) A detailed description of each Auxiliary Emission Control Device (AECD) to be installed in or on any vehicle (or engine) covered by the application;

(B) A detailed justification of each AECD (described in (b)(1)(i)(A) of this section) which results in a reduction in effectiveness of the emission control system. Such a justification may be disapproved by consideration of currently available technology, whereupon the application for certification may be disapproved under § 86.094–22(b) for the incorporation of a defeat device;

(C) The manufacturer must submit a Statement of Compliance in the application for certification which attests to the fact that they have assured themselves that the engine family is designed to be within the intermediate temperature cold testing defeat device guidance as described in § 86.094–16.

(*1*) This Statement of Compliance will be supported by a brief description of the vehicle's technological method of controlling CO emissions at intermediate temperatures.

(*2*) The manufacturer will determine a method (e.g., a test program, an engineering evaluation) which is adequate to support their Statement of Compliance. The manufacturer will support this Statement with a brief summary of the chosen method. Further details must be made available upon the Administrator's request.

(ii)(A) The manufacturer shall provide to the Administrator in the application for certification:

(*1*) A list of those parameters which are physically capable of being adjusted (including those adjustable parameters for which access is difficult) and that, if adjusted to settings other than the manufacturer's recommended setting, may affect emissions;

(*2*) A specification of the manufacturer's intended physically adjustable range of each such parameter, and the production tolerances of the limits or stops used to establish the physically adjustable range;

(*3*) A description of the limits or stops used to establish the manufacturer's intended physically adjustable range of each adjustable parameter, or any other means used to inhibit adjustment;

(*4*) The nominal or recommended setting, and the associated production tolerances, for each such parameter.

(B) The manufacturer may provide, in the application for certification, information relating to why certain parameters are not expected to be adjusted in actual use and to why the physical limits or stops used to establish the physically adjustable range of each parameter, or any other means used to inhibit adjustment, are effective in preventing adjustment of parameters on in-use vehicles to settings outside the manufacturer's intended physically adjustable ranges. This may include results of any tests to determine the difficulty of gaining access to an adjustment or exceeding a limit as intended or recommended by the manufacturer.

(C) The Administrator may require to be provided detailed drawings and descriptions of the various emission related components, and/or hardware samples of such components, for the purpose of making his determination of which vehicle or engine parameter will be subject to adjustment for new certification and Selective Enforcement Audit testing and of the physically adjustable range for each such vehicle or engine parameter.

(2) Projected U.S. sales data sufficient to enable the Administrator to select a test fleet representative of the vehicles (or engines) for which certification is requested, and, for model year 1994 through 1995 light-duty vehicles and light light-duty trucks and model year 1996 heavy light-duty trucks, data sufficient to determine projected compliance with the Tier 1 standards implementation schedules of §§ 86.094–8 and 86.094–9. The data shall also include the altitude of intended sale for model year 1994 light-duty trucks certified to the Tier 0 standards of § 86.094–9. Volume projected to be produced for U.S. sale may be used in lieu of projected U.S. sales.

(3) A description of the test equipment and fuel proposed to be used.

(4)(i) For light-duty vehicles and light-duty trucks, a description of the test procedures to be used to establish the evaporative emission deterioration factors required to be determined and supplied in § 86.094–23(b)(2).

(ii) For heavy-duty vehicles equipped with gasoline-fueled or methanol-fueled engines, the Administrator does not assume that each evaporative emission family-evaporative emission control system combination will deteriorate in a unique manner during the useful life of the vehicle. The manufacturer shall therefore identify those evaporative emission deterioration factors which shall be applied to the various evaporative emission family-evaporative emission control system combinations which are expected to exhibit similar deterioration characteristics during the useful life of the vehicle.

(5)(i)(A) A description of the test procedures to be used to establish the durability data or the exhaust emission deterioration factors required to be determined and supplied in § 86.094–23(b)(1).

(B) For each light-duty truck engine family provided an optional useful life period under the provisions of paragraph (f) of this section, and for each heavy-duty engine family, a statement of the useful life.

(C) For engine families provided an alternative useful-life period under paragraph (f) of this section, a statement of that alternative period and a brief synopsis of the justification.

(ii) For heavy-duty diesel engine families, a statement of the primary intended service class (light, medium, or heavy) and an explanation as to why

that service class was selected. Each diesel engine family shall be certified under one primary intended service class only. After reviewing the guidance in § 86.090–2, the class shall be determined on the basis of which class best represents the majority of the sales of that engine family.

(iii)(A) For each light-duty vehicle engine family, each light-duty truck engine family, and each heavy-duty engine family, a statement of recommended maintenance and procedures necessary to assure that the vehicles (or engines) covered by a certificate of conformity in operation conform to the regulations, and a description of the program for training of personnel for such maintenance, and the equipment required.

(B) A description of vehicle adjustments or modifications necessary, if any, to assure that light-duty vehicles and light-duty trucks covered by a certificate of conformity conform to the regulations while being operated at any altitude locations, and a statement of the altitude at which the adjustments or modifications apply.

(iv) At the option of the manufacturer, the proposed composition of the emission data test fleet or (where applicable) the durability data test fleet.

(6) *Participation in averaging programs*—(i) *Particulate averaging*. (A) If the manufacturer elects to participate in the particulate averaging program for diesel light-duty vehicles and/or diesel light-duty trucks or the particulate averaging program for heavy-duty diesel engines, the application must list the family particulate emission limit and the projected U.S. production volume of the family for the model year.

(B) The manufacturer shall choose the level of the family particulate emission limits, accurate to hundredth of a gram per mile or hundredth of a gram per brake horsepowerhour for heavy-duty engines.

(C) The manufacturer may at any time during production elect to change the level of any family particulate emission limit(s) by submitting the new limit(s) to the Administrator and by demonstrating compliance with the limit(s) as described in §§ 86.090–2 and 86.094–28(b)(5)(i).

(ii) *NO_X averaging*. (A) If the manufacturer elects to participate in the NO_X averaging program for light-duty trucks or the NO_X averaging program for heavy-duty engines, the application must list the family NO_X emission limit and the projected U.S. production volume of the family for the model year.

(B) The manufacturer shall choose the level of the family NO_X emission limits, accurate to one-tenth of a gram per mile or to one-tenth of a gram per brake horsepower-hour for heavy-duty engines.

(C) The manufacturer may at any time during production elect to change the level of any family NO_X emission limit(s) by submitting the new limits to the Administrator and by demonstrating compliance with the limit(s) as described in §§ 86.088–2 and 86.094–28(b)(5)(ii).

(7)(i) For Otto-cycle heavy-duty engines, the application must state whether the engine family is being certified for use in all vehicles regardless of their Gross Vehicle Weight Rating (see § 86.091–10 (a)(1)(i) and (a)(3)(i)), or only for use in vehicles with a Gross Vehicle Weight Rating greater than 14,000 pounds.

(ii) If the engine family is being certified for use in all vehicles and is being certified to the emission standards applicable to Otto-cycle engines for use only in vehicles with a Gross Vehicle Weight Rating over 14,000 pounds under the provisions of § 86.091–10(a)(3), then the application must also attest that the engine family, together with all other engine families being certified under the provisions of § 86.091–10(a)(3), represent no more than 5 percent of model year sales of the manufacturer of all Otto-cycle heavy-duty engines for use in vehicles with Gross Vehicle Weight Ratings of up to 14,000 pounds.

(8) For each light-duty vehicle or light-duty truck engine family, the exhaust emission standards (or family emission limits, if applicable) to which the engine family is to be certified, and the corresponding exhaust emission standards (or family emission limits, if applicable) which the engine family must meet in-use.

(c) Complete copies of the application and of any amendments thereto, and all notifications under §§ 86.079–32, 86.079–33, and 86.082–34 shall be submitted in such multiple copies as the Administrator may require.

(d) Incomplete light-duty trucks shall have a maximum completed curb weight and maximum completed frontal area specified by the manufacturer.

(e) For vehicles equipped with gasoline-fueled or methanol-fueled heavy-duty engines, the manufacturer shall specify a maximum nominal fuel tank capacity for each evaporative emission family-evaporative emission control system combination.

(f) Light-duty truck and heavy-duty engine manufacturers who believe that the useful life periods of § 86.094–2 are significantly unrepresentative for one or more engine families (either too long or too short), may petition the Administrator to provide an alternative useful-life period. This petition must include the full rationale behind the request together with any supporting data and other evidence. Based on this or other information the Administrator may assign an alternative useful-life period. Any petition should be submitted in a timely manner, to allow adequate time for a thorough evaluation. For model year 1994 and later light-duty trucks not subject to the Tier 0 standards of § 86.094–9, alternative useful life periods will be granted only for THC, THCE, and idle CO requirements.

(g) The manufacturer shall identify those families which will not comply with cold temperature carbon monoxide standards.

(h) For each engine family incorporating an emission control diagnostic system, the manufacturer shall submit the following information:

(1) Detailed written information fully describing the functional operation characteristics of the diagnostic system.

(2) The general method of detecting malfunctions for each emission-related powertrain component.

(i) [Reserved]

(j) For methanol-fueled vehicles, the manufacturer shall specify:

(1) Whether the vehicle is a flexible fuel vehicle or a dedicated vehicle (manufacturers must obtain advance approval from the Administrator to classify methanol-fueled vehicles that can use gasoline as dedicated vehicles); and

(2) The fuel(s) (*i.e.*, the percent methanol) for which the vehicle was designed.

[58 FR 4009, Jan. 12, 1993, as amended at 58 FR 9487, Feb. 19, 1993, 60 FR 34335, June 30, 1995; 63 FR 70694, Dec. 22, 1998]

§ 86.094–22 Approval of application for certification; test fleet selections; determinations of parameters subject to adjustment for certification and Selective Enforcement Audit, adequacy of limits, and physically adjustable ranges.

(a) After a review of the application for certification and any other information which the Administrator may require, the Administrator may approve the application and select a test fleet in accordance with § 86.094–24.

(b) *Disapproval of application.* (1) The Administrator may disapprove in whole or in part an application for certification for reasons including incompleteness, inaccuracy, inappropriate proposed mileage (or service) accumulation procedures, test equipment, or fuel; or incorporation of defeat devices in vehicles (or on engines) described by the application.

(2) The issuance of a certificate of conformity does not exempt the covered vehicles from further evaluation or testing for defeat device purposes as described in § 86.094–16.

(c) Where any part of an application is rejected, the Administrator shall notify the manufacturer in writing and set forth the reasons for such rejection. Within 30 days following receipt of such notification, the manufacturer may request a hearing on the Administrator's determination. The request shall be in writing, signed by an authorized representative of the manufacturer and shall include a statement specifying the manufacturer's objections to the Administrator's determinations, and data in support of such objections. If, after the review of the request and supporting data, the Administrator finds that the request raises a substantial factual issue, he

shall provide the manufacturer a hearing in accordance with § 86.078–6 with respect to such issue.

(d) *Approval of test procedures.* (1) The Administrator does not approve the test procedures for establishing the evaporative emission deterioration factors for light-duty vehicles and light-duty trucks. The manufacturer shall submit the procedures as required in § 86.094–21(b)(4)(i) prior to the Administrator's selection of the test fleet under § 86.094–24(b)(1), and if such procedures will involve testing of durability data vehicles selected by the Administrator or elected by the manufacturer under § 86.094–24(c)(1), prior to initiation of such testing.

(2) *Light-duty trucks using the Standard Self-Approval durability Program and heavy-duty engines only.* The Administrator does not approve the test procedures for establishing exhaust emission deterioration factors for light-duty trucks using the Standard Self-Approval Durability Program described in § 86.094–13(f) nor for heavy-duty engines. The manufacturer shall submit these procedures and determinations as required in § 86.094–21(b)(5)(i) prior to determining the deterioration factors.

(3) Heavy-duty vehicles equipped with gasoline-fueled or methanol-fueled engines only. The Administrator does not approve the test procedures for establishing the evaporative emission deterioration factors. The test procedure will conform to the requirements in § 86.094–23(b)(3).

(e) *Parameter adjustment requirements.* When the Administrator selects emission data vehicles for the test fleet, he will at the same time determine those vehicle or engine parameters which will be subject to adjustment for certification, Selective Enforcement Audit and Production Compliance Audit testing, the adequacy of the limits, stops, seals, or other means used to inhibit adjustment, and the resulting physically adjustable ranges for each such parameter and will then notify the manufacturer of his determinations.

(1) *Determining parameters subject to adjustment.* (i) Except as noted in paragraph (e)(1)(iv) of this section, the Administrator may determine to be subject to adjustment the idle fuel-air mixture parameter on Otto-cycle vehicles (or engines) (carbureted or fuel-injected); the choke valve action parameter(s) on carbureted, Otto-cycle vehicles (or engines); or any parameter on any vehicle (or engine) (Otto-cycle or diesel) which is physically capable of being adjusted, may significantly affect emissions, and was not present on the manufacturer's vehicles (or engines) in the previous model year in the same form and function.

(ii) The Administrator may, in addition, determine to be subject to adjustment any other parameters on any vehicle or engine which is physically capable of being adjusted and which may significantly affect emissions. However, the Administrator may do so only if he has previously notified the manufacturer that he might do so and has found, at the time he gave this notice, that the intervening period would be adequate to permit the development and application of the requisite technology, giving appropriate consideration to the cost of compliance within such period. In no event will this notification be given later than September 1 of the calendar year two years prior to the model year.

(iii) In determining the parameters subject to adjustment, the Administrator will consider the likelihood that, for each of the parameters listed in paragraphs (e)(1) (i) and (ii) of this section, settings other than the manufacturer's recommended setting will occur on in-use vehicles (or engines). In determining likelihood, the Administrator may consider such factors as, but not limited to, information contained in the preliminary application, surveillance information from similar in-use vehicles (or engines), the difficulty and cost of gaining access to an adjustment, damage to the vehicle (or engine) if an attempt is made to gain such access and the need to replace parts following such attempt, and the effect of settings other than the manufacturer's recommended setting on vehicle (or engine) performance characteristics including emission characteristics.

(iv) Manual chokes of heavy-duty engines only will not be considered a parameter subject to adjustment under

the parameter adjustment requirements.

(2)(i) The Administrator shall determine a parameter to be adequately inaccessible or sealed if:

(A) In the case of an idle mixture screw, the screw is recessed within the carburetor casting and sealed with lead, thermosetting plastic, or an inverted elliptical spacer or sheared off after adjustment at the factory, and the inaccessibility is such that the screw cannot be accessed and/or adjusted with simple tools in one-half hour or for $20 (1978 dollars) or less;

(B) In the case of a choke bimetal spring, the plate covering the bimetal spring is riveted or welded in place, or held in place with nonreversible screws;

(C) In the case of a parameter which may be adjusted by elongating or bending adjustable members (e.g., the choke vacuum break), the elongation of the adjustable member is limited by design or, in the case of a bendable member, the member is constructed of a material which when bent would return to its original shape after the force is removed (plastic or spring steel materials);

(D) In the case of any parameter, the manufacturer demonstrates that adjusting the parameter to settings other than the manufacturer's recommended setting takes more than one-half hour or costs more than $20 (1978 dollars).

(ii) The Administrator shall determine a physical limit or stop to be an adequate restraint on adjustability if:

(A) In the case of a threaded adjustment, the threads are terminated, pinned, or crimped so as to prevent additional travel without breakage or need for repairs which take more than one-half hour or cost more than $20 (1978 dollars);

(B) The adjustment is ineffective at the end of the limits of travel regardless of additional forces or torques applied to the adjustment;

(C) The manufacturer demonstrates that travel or rotation limits cannot be exceeded with the use of simple and inexpensive tools (screwdriver, pliers, open-end or box wrenches, etc.) without incurring significant and costly damage to the vehicle (or engine) or control system or without taking more than one-half hour or costing more than $20 (1978 dollars).

(iii) If manufacturer service manuals or bulletins describe routine procedures for gaining access to a parameter or for removing or exceeding a physical limit, stop, seal or other means used to inhibit adjustment, or if surveillance data indicate that gaining access, removing, or exceeding is likely, paragraphs (e)(2)(i) and (ii) of this section shall not apply for that parameter.

(iv) In determining the adequacy of a physical limit, stop, seal, or other means used to inhibit adjustment of a parameter not covered by paragraph (e)(2)(i) or (ii) of this section, the Administrator will consider the likelihood that it will be circumvented, removed, or exceeded on in-use vehicles. In determining likelihood, the Administrator may consider such factors as, but not limited to, information contained in the preliminary application; surveillance information from similar in-use vehicles (or engines); the difficulty and cost of circumventing, removing, or exceeding the limit, stop, seal, or other means; damage to the vehicle (or engine) if an attempt is made to circumvent, remove, or exceed it and the need to replace parts following such attempt; and the effect of settings beyond the limit, stop, seal, or other means on vehicle (or engine) performance characteristics other than emission characteristics.

(3) The Administrator shall determine two physically adjustable ranges for each parameter subject to adjustment:

(i)(A) In the case of a parameter determined to be adequately inaccessible or sealed, the Administrator may include within the physically adjustable range applicable to testing under this subpart (certification testing) all settings within the production tolerance associated with the nominal setting for that parameter, as specified by the manufacturer in the preliminary application for certification; or

(B) In the case of other parameters, the Administrator shall include within this range all settings within physical limits or stops determined to be adequate restraints on adjustability. The Administrator may also include the production tolerances on the location

of these limits or stops when determining the physically adjustable range.

(ii)(A) In the case of a parameter determined to be adequately inaccessible or sealed, the Administrator shall include within the physically adjustable range applicable to testing under subparts G or K (Selective Enforcement Audit and Production Compliance Audit) only the actual settings to which the parameter is adjusted during production; or

(B) In the case of other parameters, the Administrator shall include within this range all settings within physical limits or stops determined to be adequate restraints on adjustability, as they are actually located on the test vehicle (or engine).

(f) *Submittal of advance information.* (1) If the manufacturer submits the information specified in § 86.094–21(b)(1)(ii) in advance of its full preliminary application for certification, the Administrator shall review the information and make the determinations required in paragraph (e) of this section within 90 days of the manufacturer's submittal.

(2) The 90-day decision period is exclusive of the elapsed time during which EPA may request additional information from manufacturers regarding an adjustable parameter and the receipt of the manufacturers' response(s).

(g) Within 30 days following receipt of notification of the Administrator's determinations made under paragraph (e) of this section, the manufacturer may request a hearing on the Administrator's determinations. The request shall be in writing, signed by an authorized representative of the manufacturer, and shall include a statement specifying the manufacturer's objections to the Administrator's determinations, and data in support of such objections. If, after review of the request and supporting data, the Administrator finds that the request raises a substantial factual issue, he shall provide the manufacturer a hearing in accordance with § 86.078–6 with respect to such issue.

[48 FR 4010, Jan. 12, 1993]

§ 86.094–23 Required data.

(a) The manufacturer shall perform the tests required by the applicable test procedures and submit to the Administrator the information described in paragraphs (b) through (l) of this section, provided, however, that if requested by the manufacturer, the Administrator may waive any requirement of this section for testing of vehicle (or engine) for which emission data are available or will be made available under the provisions of § 86.091–29.

(b) *Durability data.* (1)(i) The manufacturer shall submit exhaust emission durability data on such light-duty vehicles tested in accordance with applicable test procedures and in such numbers as specified, which will show the performance of the systems installed on or incorporated in the vehicle for extended mileage, as well as a record of all pertinent maintenance performed on the test vehicles.

(ii) The manufacturer shall submit exhaust emission deterioration factors for light-duty trucks and heavy-duty engines and all test data that are derived from the testing described under § 86.094–21(b)(5)(i)(A), as well as a record of all pertinent maintenance. Such testing shall be designed and conducted in accordance with good engineering practice to assure that the engines covered by a certificate issued under § 86.094–30 will meet each emission standard (or family emission limit, as appropriate) in § 86.094–9, § 86.091–10, or § 86.094–11 as appropriate, in actual use for the useful life applicable to that standard.

(2) For light-duty vehicles and light-duty trucks, the manufacturer shall submit evaporative emission deterioration factors for each evaporative emission family-evaporative emission control system combination and all test data that are derived from testing described under § 86.094–21(b)(4)(i) designed and conducted in accordance with good engineering practice to assure that the vehicles covered by a certificate issued under § 86.094–30 will meet the evaporative emission standards in § 86.094–8 or § 86.094–9, as appropriate, for the useful life of the vehicle.

(3) For heavy-duty vehicles equipped with gasoline-fueled, natural gas-fueled, liquefied petroleum gas-fueled

or methanol-fueled engines, evaporative emission deterioration factors for each evaporative emission family-evaporative emission control system combination identified in accordance with § 86.091–21(b)(4)(ii). Furthermore, a statement that the test procedure(s) used to derive the deterioration factors includes, but need not be limited to, a consideration of the ambient effects of ozone and temperature fluctuations and the service accumulation effects of vibration, time, vapor saturation and purge cycling. The deterioration factor test procedure shall be designed and conducted in accordance with good engineering practice to assure that the vehicles covered by a certificate issued under § 86.091–30 will meet the evaporative emission standards in § 86.091–10 and § 86.091–11 in actual use for the useful life of the engine. Furthermore, a statement that a description of the test procedure, as well as all data, analyses and evaluations, is available to the Administrator upon request.

(4)(i) For heavy-duty vehicles with a Gross Vehicle Weight Rating of up to 26,000 pounds and equipped with gasoline-fueled, natural gas-fueled, liquefied petroleum gas-fueled or methanol-fueled engines, a written statement to the Administrator certifying that the manufacturer's vehicles meet the standards of § 86.091–10 or § 86.091–11 (as applicable) as determined by the provisions of § 86.091–28. Furthermore, a written statement to the Administrator that all data, analyses, test procedures, evaluations and other documents, on which the above statement is based, are available to the Administrator upon request.

(ii) For heavy-duty vehicles with a Gross Vehicle Weight Rating of greater than 26,000 pounds and equipped with gasoline-fueled, natural gas-fueled, liquefied petroleum gas-fueled or methanol-fueled engines, a written statement to the Administrator certifying that the manufacturer's evaporative emission control systems are designed, using good engineering practice, to meet the standards of § 86.091–10 or § 86.091–11 (as applicable) as determined by the provisions of § 86.091–28. Furthermore, a written statement to the Administrator that all data, analyses, test procedures, evaluations and other documents, on which the above statement is based, are available to the Administrator upon request.

(c) *Emission data.* (1) Emission data, including in the case of methanol fuel, methanol, formaldehyde and total hydrocarbon equivalent, exhaust methane data in the case of vehicles meeting a non-methane hydrocarbon standard on such vehicles tested in accordance with applicable test procedures and in such numbers as specified. These data shall include zero-mile data, if generated, and emission data generated for certification as required under § 86.090–26(a)(3)(i) or § 86.090–26(a)(3)(ii). In lieu of providing emission data the Administrator may, on request of the manufacturer, allow the manufacturer to demonstrate (on the basis of previous emission tests, development tests or other information) that the engine will conform with certain applicable emission standards of § 86.094–8 or § 86.094–9. Standards eligible for such manufacturer requests are those for idle CO emissions, smoke emissions, or particulate emissions from methanol-fueled, natural gas-fueled and liquefied petroleum gas-fueled diesel-cycle certification vehicles, on evaporative emissions or refueling emissions from natural gas-fueled or liquefied petroleum gas-fueled vehicles (light-duty and heavy-duty), and those for particulate emissions from model year 1994 and later gasoline-fueled, methanol-fueled, natural gas-fueled or liquefied petroleum gas-fueled Otto-cycle certification vehicles that are not certified to the Tier 0 standards of § 86.094–9 (a)(1)(i), (a)(1)(ii), or § 86.094–8(a)(1)(i). Also eligible for such requests are standards for total hydrocarbon emissions from model year 1994 and later certification vehicles that are not certified to the Tier 0 standards of § 86.094–9 (a)(1)(i), (a)(1)(ii) or § 86.094–8(a)(1)(i). By separate request, including appropriate supporting test data, the manufacturer may request that the Administrator also waive the requirement to measure particulate emissions when conducting Selective Enforcement Audit testing of Otto-cycle vehicles, or the requirement to measure evaporative emissions when conducting Selective Enforcement Audit testing of

natural gas or liquefied petroleum gas-fueled vehicles.

(2) *Certification engines.* (i) Emission data on such engines tested in accordance with applicable emission test procedures of this subpart and in such numbers as specified. These data shall include zero-hour data, if generated, and emission data generated for certification as required under § 86.090–26(c)(4). In lieu of providing emission data on idle CO emissions, smoke emissions or particulate emissions from methanol-fueled, natural gas-fueled or liquefied petroleum gas-fueled diesel certification engines, or on CO emissions from petroleum-fueled, natural gas-fueled, liquefied petroleum gas-fueled, or methanol-fueled diesel certification engines the Administrator may, on request of the manufacturer, allow the manufacturer to demonstrate (on the basis of previous emission tests, development tests or other information) that the engine will conform with the applicable emission standards of § 86.091–11, or § 86.094–11.

(ii) For heavy-duty diesel engines, a manufacturer may submit hot-start data only, in accordance with subpart N of this part, when making application for certification. However, for conformity Selective Enforcement Audit and recall testing by the Agency, both the cold-start and hot-start test data, as specified in subpart N of this part, will be included in the official results.

(d) The manufacturer shall submit a statement that the vehicles (or engines) for which certification is requested conform to the requirements in § 86.084–5(b), and that the descriptions of tests performed to ascertain compliance with the general standards in § 86.084–5(b), and that the data derived from such tests are available to the Administrator upon request.

(e)(1) The manufacturer shall submit a statement that the test vehicles (or test engines) for which data are submitted to demonstrate compliance with the applicable standards (or family emission limits, as appropriate) of this subpart are in all material respects as described in the manufacturer's application for certification, that they have been tested in accordance with the applicable test procedures utilizing the fuels and equipment described in the application for certification, and that on the basis of such tests the vehicles (or engines) conform to the requirements of this part. If such statements cannot be made with respect to any vehicle (or engine) tested, the vehicle (or engine) shall be identified, and all pertinent data relating thereto shall be supplied to the Administrator. If, on the basis of the data supplied and any additional data as required by the Administrator, the Administrator determines that the test vehicles (or test engine) was not as described in the application for certification or was not tested in accordance with the applicable test procedures utilizing the fuels and equipment as described in the application for certification, the Administrator may make the determination that the vehicle (or engine) does not meet the applicable standards (or family emission limits, as appropriate). The provisions of § 86.094–30(b) shall then be followed.

(2) For evaporative emission durability, or light-duty truck or heavy-duty engine exhaust emission durability, the manufacturer shall submit a statement of compliance with paragraph (b)(1)(ii), (b)(2), or (b)(3) of this section, as applicable.

(f) Additionally, manufacturers participating in the particulate averaging program for diesel light-duty vehicles and diesel light-duty trucks shall submit:

(1) In the application for certification, a statement that the vehicles for which certification is requested will not, to the best of the manufacturer's belief, when included in the manufacturer's production-weighted average emission level, cause the applicable particulate standard(s) to be exceeded; and

(2) No longer than 90 days after the end of a given model year of production of engine families included in one of the diesel particulate averaging programs, the number of vehicles produced in each engine family at each certified particulate FEL, along with the resulting production-weighted average particulate emission level.

(g) Additionally, manufacturers participating in the NO_X averaging program for light-duty trucks shall submit:

(1) In the application for certification, a statement that the vehicles for which certification is required will not, to the best of the manufacturer's belief, when included in the manufacturer's production-weighted average emission level, cause the applicable NO_X standard(s) to be exceeded; and

(2) No longer than 90 days after the end of a given model year of production of engine families included in the NO_X averaging program, the number of vehicles produced in each engine family at each certified NO_X emission level.

(h) Additionally, manufacturers participating in any of the NO_X and/or particulate averaging, trading, or banking programs for heavy-duty engines shall submit for each participating family the items listed in paragraphs (h)(1) through (3) of this section.

(1) *Application for certification.* (i) The application for certification will include a statement that the engines for which certification is requested will not, to the best of the manufacturer's belief, when included in any of the averaging, trading, or banking programs cause the applicable NO_X or particulate standard(s) to be exceeded.

(ii) The application for certification will also include the type (NO_X or particulate) and the projected number of credits generated/needed for this family, the applicable averaging set, the projected U.S. (49-state) production volumes, by quarter, NCPs in use on a similar family and the values required to calculate credits as given in § 86.094–15. Manufacturers shall also submit how and where credit surpluses are to be dispersed and how and through what means credit deficits are to be met, as explained in § 86.094–15. The application must project that each engine family will be in compliance with the applicable NO_X and/or particulate emission standards based on the engine mass emissions, and credits from averaging, trading and banking.

(2) [Reserved]

(3) *End-of-year report.* The manufacturer shall submit end-of-year reports for each engine family participating in any of the averaging, trading, or banking programs, as described in paragraphs (h)(3) (i) through (iv) of this section.

(i) These reports shall be submitted within 90 days of the end of the model year to: Director, Manufacturers Operations Division (EN–340F), U.S. Environmental Protection Agency, 1200 Pennsylvania Ave., NW., Washington, DC 20460.

(ii) These reports shall indicate the engine family, the averaging set, the actual U.S. (49-state) production volume, the values required to calculate credits as given in § 86.094–15, the resulting type (NO_X or particulate) and number of credits generated/required, and the NCPs in use on a similar NCP family. Manufacturers shall also submit how and where credit surpluses were dispersed (or are to be banked) and how and through what means credit deficits were met. Copies of contracts related to credit trading must also be included or supplied by the broker if applicable. The report shall also include a calculation of credit balances to show that net mass emissions balances are within those allowed by the emission standards (equal to or greater than a zero credit balance). The credit discount factor described in § 86.094–15 must be included as required.

(iii) The 49-state production counts for end-of-year reports shall be based on the location of the first point of retail sale (e.g., customer, dealer, secondary manufacturer) by the manufacturer.

(iv) Errors discovered by EPA or the manufacturer in the end-of-year report, including changes in the 49 state production counts, may be corrected up to 180 days subsequent to submission of the end-of-year report. Errors discovered by EPA after 180 days shall be corrected if credits are reduced. Errors in the manufacturer's favor will not be corrected if discovered after the 180 day correction period allowed.

(i) Failure by a manufacturer participating in the averaging, trading, or banking programs to submit any quarterly or end-of-year report (as applicable) in the specified time for all vehicles and engines that are part of an averaging set is a violation of section 203(a)(1) of the Clean Air Act (42 U.S.C. 7522(a)(1)) for each such vehicle and engine.

(j) Failure by a manufacturer generating credits for deposit only in either

the HDE NO_X or particulate banking programs to submit their end-of-year reports in the applicable specified time period (i.e., 90 days after the end of the model year) shall result in the credits not being available for use until such reports are received and reviewed by EPA. Use of projected credits pending EPA review will not be permitted in these circumstances.

(k) Engine families certified using NCPs are not required to meet the requirements outlined in paragraphs (f) through (j) of this section.

(l) Additionally, manufacturers certifying vehicles shall submit for each model year 1994 through 1997 light-duty vehicle and light light-duty truck engine family and each model year 1996 through 1998 heavy light-duty truck engine family the information listed in paragraphs (l) (1) and (2) of this section.

(1) *Application for certification*. In the application for certification, the manufacturer shall submit the projected sales volume of engine families certifying to the respective standards, and the in-use standards that each engine family will meet. Volume projected to be produced for U.S. sale may be used in lieu of projected U.S. sales.

(2) *End-of-year reports for each engine family*. (i) These end-of-year reports shall be submitted within 90 days of the end of the model year to: Director, Manufacturers Operations Division (EN–340F), U.S. Environmental Protection Agency, 1200 Pennsylvania Ave., NW., Washington, DC 20460.

(ii) These reports shall indicate the model year, engine family, and the actual U.S. sales volume. The manufacturer may petition the Administrator to allow volume produced for U.S. sale to be used in lieu of U.S. sales. Such petition shall be submitted within 30 days of the end of the model year to the Manufacturers Operations Division. For the petition to be granted, the manufacturer must establish to the satisfaction of the Administrator that production volume is functionally equivalent to sales volume.

(iii) The U.S. sales volume for end-of-year reports shall be based on the location of the point of sale to a dealer, distributor, fleet operator, broker, or any other entity which comprises the point of first sale.

(iv) Failure by a manufacturer to submit the end-of-year report within the specified time may result in certificate(s) for the engine family(ies) certified to Tier 0 certification standards being voided ab initio plus any applicable civil penalties for failure to submit the required information to the Agency.

(v) The information shall be organized in such a way as to allow the Administrator to determine compliance with the Tier 1 standards implementation schedules of §§ 86.094–8 and 86.094–9, and the Tier 1 and Tier 1_I implementation schedules of §§ 86.708–94 and 86.709–94.

[58 FR 4012, Jan. 12, 1993, as amended at 58 FR 33208, June 16, 1993; 58 FR 66294, Dec. 20, 1993; 59 FR 14110, Mar. 25, 1994; 59 FR 48498, Sept. 21, 1994]

§ 86.094–24 Test vehicles and engines.

(a) *General*. Paragraph (a) of this section applies to the grouping of vehicles or engines into families.

(1) The vehicles or engines covered by an application for certification will be divided into groupings of engines which are expected to have similar emission characteristics throughout their useful life. Each group of engines with similar emission characteristics shall be defined as a separate engine family.

(2) To be classed in the same engine family, engines must be identical in all the respects listed in paragraphs (a)(2)(i) through (x) of this section.

(i) The cylinder bore center-to-center dimensions.

(ii)–(iii) [Reserved]

(iv) The cylinder block configuration (air-cooled or water-cooled: L–6, 90 deg., V–8, etc.).

(v) The location of the intake and exhaust valves (or ports).

(vi) The method of air aspiration.

(vii) The combustion cycle.

(viii) Catalytic converter characteristics.

(ix) Thermal reactor characteristics.

(x) Type of air inlet cooler (e.g., intercoolers and after-coolers) for diesel heavy-duty engines.

(3)(i) Engines identical in all the respects listed in paragraph (a)(2) of this

section may be further divided into different engine families if the Administrator determines that they may be expected to have different emission characteristics. This determination will be based upon a consideration of the features of each engine listed in paragraphs (a)(3)(i) (A) through (G) of this section.

(A) The bore and stroke.

(B) The surface-to-volume ratio of the nominally dimensioned cylinder at the top dead center positions.

(C) The intake manifold induction port sizes and configuration.

(D) The exhaust manifold port size and configuration.

(E) The intake and exhaust valve sizes.

(F) The fuel system.

(G) The camshaft timing and ignition or injection timing characteristics.

(ii) Light-duty trucks and heavy-duty engines produced in different model years and distinguishable in the respects listed in paragraph (a)(2) of this section shall be treated as belonging to a single engine family if the Administrator requires it, after determining that the engines may be expected to have similar emission deterioration characteristics.

(iii) Engines identical in all of the respects listed in paragraphs (a)(2) and (a)(3)(i) of this section may be further divided into different engine families if some of the engines are expected to be sold as clean-fuel vehicles under 40 CFR part 88, and if the manufacturer chooses to certify the engines to both the clean-fuel vehicle standards of 40 CFR part 88 and the general standards of this part 86. One engine family shall include engines that are intended for general use. For this engine family, only the provisions of this part 86 shall apply. The second engine family shall include all engines that are intended to be used in clean-fuel vehicles. For this engine family, the provisions of both this part 86 and 40 CFR part 88 shall apply. The manufacturer may submit one set of data to certify both engine families.

(4) Where engines are of a type which cannot be divided into engine families based upon the criteria listed in paragraphs (a)(2) and (a)(3) of this section, the Administrator will establish families for those engines based upon those features most related to their emission characteristics. Engines that are eligible to be included in the same engine family based on the criteria in paragraphs (a)(2) and (a)(3)(i) of this section may be further divided into different engine families if the manufacturer determines that they may be expected to have different emission characteristics, or if the manufacturer chooses to certify the engines to both the clean-fuel vehicle standards of 40 CFR part 88 and the general standards of this part 86 as described in paragraph (a)(3)(iii) of this section. The determination of the emission characteristics will be based upon a consideration of the following features of each engine:

(i) The dimension from the center line of the crankshaft to the center line of the camshaft.

(ii) The dimension from the center line of the crankshaft to the top of the cylinder block head face.

(iii) The size of the intake and exhaust valves (or ports).

(5) Light-duty vehicles and light-duty trucks covered by an application for certification will be divided into groupings (e.g., by fuel type) which are expected to have similar evaporative emission characteristics throughout their useful life. Each group of vehicles with similar evaporative emission characteristics shall be defined as a separate evaporative emission family.

(6) For light-duty vehicles and light-duty trucks to be classed in the same evaporative emission family, vehicles must be similar with respect to:

(i) Type of vapor storage device (e.g., canister, air cleaner, crankcase).

(ii) Basic canister design.

(iii) Fuel system.

(iv) Fuel type.

(7) Where vehicles are of a type which cannot be divided into evaporative emission families based on the criteria listed in paragraph (a)(2) of this section, the Administrator will establish families for those vehicles based upon the features most related to their evaporative emission characteristics.

(8)(i) If the manufacturer elects to participate in the Production AMA Durability Program, the engine families covered by an application for certification shall be grouped based upon

similar engine design and emission control system characteristics. Each of these groups shall constitute a separate engine family group.

(ii) To be classed in the same engine family group, engine families must contain engines identical in all of the respects listed in paragraphs (a)(8)(ii)(A) through (D) of this section.

(A) The combustion cycle.

(B) The cylinder block configuration (air-cooled or water-cooled: L–6, V–8, rotary, etc.).

(C) Displacement (engines of different displacement within 50 cubic inches or 15 percent of the largest displacement and contained within a multidisplacement engine family will be included in the same engine family group).

(D) Catalytic converter usage and basic type (noncatalyst, oxidation catalyst only, three-way catalyst equipped).

(9) Engine families identical in all respects listed in paragraph (a)(8) of this section may be further divided into different engine family groups if the Administrator determines that they are expected to have significantly different exhaust emission control system deterioration characteristics.

(10) A manufacturer may request the Administrator to include in an engine family group engine families in addition to those grouped under the provisions of paragraph (a)(8) of this section. This request must be accompanied by information the manufacturer believes supports the inclusion of these additional engine families.

(11) A manufacturer may combine into a single engine family group those light-duty vehicle and light-duty truck engine families which otherwise meet the requirements of paragraphs (a) (8) through (10) of this section.

(12) Vehicles powered by heavy-duty engines covered by an application for certification and using fuels for which there is an applicable evaporative emission standard will be divided into groupings of vehicles on the basis of physical features, including fuel type, which are expected to affect evaporative emissions. Each group of vehicles with similar features shall be defined as a separate evaporative emission family.

(13) For vehicles equipped with heavy-duty engines using fuels for which there are applicable evaporative emission standards to be classed in the same evaporative emission family, vehicles must be identical with respect to:

(i) Method of fuel/air metering (i.e., carburetion versus fuel injection).

(ii) Carburetor bowl fuel volume, within a 10 cc range.

(iii) Fuel type.

(14) For vehicles equipped with heavy-duty engines using fuels for which there are applicable evaporative emission standards to be classed in the same evaporative emission control system family, vehicles must be identical with respect to:

(i) Method of vapor storage.

(ii) Method of carburetor sealing.

(iii) Method of air cleaner sealing.

(iv) Vapor storage working capacity, within a 20g range.

(v) Number of storage devices.

(vi) Method of purging stored vapors.

(vii) Method of venting the carburetor during both engine off and engine operation.

(viii) Liquid fuel hose material.

(ix) Vapor storage material.

(15) Where vehicles equipped with heavy-duty engines using fuels for which there are applicable evaporative emission standards and which cannot be divided into evaporative emission family-control system combinations based on the criteria listed above, the Administrator will establish evaporative emission family-control system combinations for those vehicles based on features most related to their evaporative emission characteristics.

(b) *Emission data*—(1) *Light-duty vehicles and light-duty trucks.* Paragraph (b)(1) of this section applies to light-duty vehicle and light-duty truck emission data vehicles.

(i) Vehicles will be chosen to be operated and tested for emission data based upon engine family groupings. Within each engine family, one test vehicle will be selected based on the criterion that the Administrator shall select the vehicle with the heaviest equivalent test weight (including options) within the family. If more than one vehicle meets this criterion, then within that vehicle grouping the Administrator

shall select, in the order listed, the highest road-load power, largest displacement, the transmission with the highest numerical final gear ratio (including overdrive), the highest numerical axle ratio offered in that engine family, and the maximum fuel flow calibration

(ii) The Administrator shall select one additional test vehicle from within each engine family. The additional vehicle selected shall be the vehicle expected to exhibit the highest emissions of those vehicles remaining in the engine family. If all vehicles within the engine family are similar the Administrator may waive the requirements of this paragraph.

(iii) Within an engine family and exhaust emission control system, the manufacturer may alter any emission data vehicle (or other vehicles such as current or previous model year emission data vehicles, fuel economy data vehicles, and development vehicles provided they meet emission data vehicles' protocol) to represent more than one selection under paragraph (b)(1) (i), (ii), (iv), or (vii) of this section.

(iv) If the vehicles selected in accordance with paragraphs (b)(1) (i) and (ii) of this section do not represent each engine-system combination, then one vehicle of each engine-system combination not represented will be selected by the Administrator. The vehicle selected shall be the vehicle expected to exhibit the highest emissions of those vehicles remaining in the engine family.

(v) For high-altitude exhaust emission compliance for each engine family, the manufacturer shall follow one of the procedures described in paragraphs (b)(1)(v) (A) and (B) of this section.

(A) The manufacturer will select for testing under high-altitude conditions the vehicle expected to exhibit the highest emissions from the nonexempt vehicles selected in accordance with paragraphs (b)(1) (ii), (iii), and (iv) of this section; or

(B) In lieu of testing vehicles according to paragraph (b)(1)(v)(A) of this section, a manufacturer may provide a statement in its application for certification, based on the manufacturer's engineering evaluation of such high altitude emission testing as the manufacturer deems appropriate,

(*1*) That all light-duty vehicles not exempt under § 86.094–8(h) comply with the emission standards at high altitude; and

(*2*) That light-duty trucks sold for principal use at designated high-altitude locations comply with the high-altitude emission requirements and that all light-duty trucks sold at low altitude, which are not exempt under § 86.094–9(h), are capable of being modified to meet high-altitude standards.

(vi) If 90 percent or more of the engine family sales will be in California, a manufacturer may substitute emission data vehicles selected by the California Air Resources Board criteria for the selections specified in paragraphs (b)(1) (i), (ii), and (iv) of this section.

(vii) Vehicles will be chosen to be operated and tested for evaporative emission data based upon evaporative emission family groupings as defined in paragraphs (a) (12) through (15) of this section.

(A) Vehicles of each evaporative emission family will be divided into evaporative emission control systems.

(B) The Administrator will select the vehicle expected to exhibit the highest evaporative emissions from within each evaporative family to be certified. This vehicle is selected from among the vehicles represented by the exhaust emission data selections for the engine family, unless evaporative testing has already been completed for the vehicle expected to exhibit the highest evaporative emissions for the evaporative family as part of another engine family's testing.

(C) If the vehicles selected in accordance with paragraph (b)(1)(vii)(B) of this section do not represent each evaporative emission control system then the Administrator will select the highest expected evaporative emission vehicle from within the unrepresented evaporative system.

(viii) For high-altitude evaporative emission compliance for each evaporative emission family, the manufacturer shall follow one of the procedures described in paragraphs (b)(1)(viii) (A) and (B) of this section.

(A) The manufacturer will select for testing under high-altitude conditions

the one nonexempt vehicle previously selected under paragraph (b)(1)(vii) (B) or (C) of this section which is expected to have the highest level of evaporative emissions when operated at high altitude; or

(B) In lieu of testing vehicles according to paragraph (b)(1)(viii)(A) of this section, a manufacturer may provide a statement in its application for certification, based on the manufacturer's engineering evaluation of such high-altitude emission testing as the manufacturer deems appropriate,

(*1*) That all light-duty vehicles not exempt under § 86.094–8(h) comply with the emission standards at high altitude; and

(*2*) That light-duty trucks sold for principal use at designated high-altitude locations comply with the high-altitude emission requirements and that all light-duty trucks sold at low-altitude, which are not exempt under § 86.094–9(h), are capable of being modified to meet high-altitude standards.

(ix) Vehicles selected for high altitude exhaust emission testing under paragraph (b)(1)(v)(A) of this section may be used to satisfy the evaporative emission testing requirements of paragraph (b)(1) (viii) (A) of this section.

(x) *Light-duty trucks only*. (A) The manufacturer may reconfigure any of the low-altitude emission data vehicles to represent the vehicle configuration required to be tested at high altitude.

(B) The manufacturer is not required to test the reconfigured vehicle at low altitude.

(xi) For cold temperature CO exhaust emission compliance for each engine family, the Administrator will select for testing the vehicle expected to emit the highest emissions from the vehicles selected in accordance with paragraphs (b)(1) (i), (ii), (iii), and (iv) of this section. This vehicle shall be tested by the manufacturer in accordance with the test procedures in subpart C of this part or with alternative procedures requested by the manufacturer and approved in advance by the Administrator.

(2) *Otto-cycle heavy-duty emission data engines*. Paragraph (b)(2) of this section applies to Otto-cycle heavy-duty engines.

(i)–(ii) [Reserved]

(iii) The Administrator shall select a maximum of two engines within each engine family based upon features indicating that they may have the highest emission levels of the engines in the engine family in accordance with the criteria described in paragraphs (b)(2)(iii) (A) and (B) of this section.

(A) The Administrator shall select one emission data engine first based on the largest displacement within the engine family. Then from those within the largest displacement the Administrator shall select, in the order listed, highest fuel flow at the speed of maximum rated torque, the engine with the most advanced spark timing, no EGR or lowest EGR flow, and no air pump or lowest actual flow air pump.

(B) The Administrator shall select one additional engine, from within each engine family. The engine selected shall be the engine expected to exhibit the highest emissions of those engines remaining in the engine family. If all engines within the engine family are similar the Administrator may waive the requirements of this paragraph.

(iv) If the engines selected in accordance with paragraphs (b)(2) (ii) and (iii) of this section do not represent each engine displacement-exhaust emission control system combination, then one engine of each engine displacement-exhaust emission control system combination not represented shall be selected by the Administrator.

(v) Within an engine family/displacement/control system combination, the manufacturer may alter any emission data engine (or other engine including current or previous model year emission data engines and development engines provided they meet the emission data engines' protocol) to represent more than one selection under paragraph (b)(2)(iii) of this section.

(3) *Diesel heavy-duty emission data engines*. Paragraph (b)(3) of this section applies to diesel heavy-duty emission data vehicles.

(i) Engines will be chosen to be run for emission data based upon engine family groupings. Within each engine family, the requirements of paragraphs (b)(3) (i) through (iv) of this section must be met.

(ii) Engines of each engine family will be divided into groups based upon their exhaust emission control systems. One engine of each engine system combination shall be run for smoke emission data (diesel engines only) and gaseous emission data. Either the complete gaseous emission test or the complete smoke test may be conducted first. Within each combination, the engine that features the highest fuel feed per stroke, primarily at the speed of maximum rated torque and secondarily at rated speed, will usually be selected. If there are military engines with higher fuel rates than other engines in the same engine system combinations, then one military engine shall also be selected. The engine with the highest fuel feed per stroke will usually be selected.

(iii) The Administrator may select a maximum of one additional engine within each engine-system combination based upon features indicating that it may have the highest emission levels of the engines of that combination. In selecting this engine, the Administrator will consider such features as the injection system, fuel system, compression ratio, rated speed, rated horsepower, peak torque speed, and peak torque.

(iv) Within an engine family control system combination, the manufacturer may alter any emission data engine (or other engine including current or previous model year emission data engines and development engines provided they meet the emission data engines' protocol) to represent more than one selection under paragraphs (b)(3) (ii) and (iii) of this section.

(c) *Durability data*—(1) *Light-duty vehicle durability data vehicles.* Paragraph (c)(1) of this section applies to light-duty vehicle durability data vehicles.

(i) A durability data vehicle will be selected by the Administrator to represent each engine-system combination. The vehicle selected shall be of the engine displacement with the largest projected sales volume of vehicles with that control-system combination in that engine family and will be designated by the Administrator as to transmission type, fuel system, inertia weight class, and test weight.

(ii) A manufacturer may elect to operate and test additional vehicles to represent any engine-system combination. The additional vehicles must be of the same engine displacement, transmission type, fuel system and inertia weight class as the vehicle selected for that engine-system combination in accordance with the provisions of paragraph (c)(1)(i) of this section. Notice of an intent to operate and test additional vehicles shall be given to the Administrator no later than 30 days following notification of the test fleet selection.

(2) *Light-duty trucks.* Paragraph (c)(2) of this section applies to vehicles, engines, subsystems, or components used to establish exhaust emission deterioration factors for light-duty trucks.

(i) The manufacturer shall select the vehicles, engines, subsystems, or components to be used to determine exhaust emission deterioration factors for each engine-family control system combination. Whether vehicles, engines, subsystems, or components are used, they shall be selected so that their emissions deterioration characteristics may be expected to represent those of in-use vehicles, based on good engineering judgment.

(ii) [Reserved]

(3) *Heavy-duty engines.* Paragraph (c)(3) of this section applies to engines, subsystems, or components used to establish exhaust emission deterioration factors for heavy-duty engines.

(i) The manufacturer shall select the engines, subsystems, or components to be used to determine exhaust emission deterioration factors for each engine-family control system combination. Whether engines, subsystems, or components are used, they shall be selected so that their emissions deterioration characteristics may be expected to represent those of in-use engines, based on good engineering judgment.

(ii) [Reserved]

(d) For purposes of testing under § 86.094–26(a)(9) or (b)(11), the Administrator may require additional emission data vehicles (or emission data engines) and durability data vehicles (light-duty vehicles only) identical in all material respects to vehicles (or engines) selected in accordance with paragraphs (b) and (c) of this section,

provided that the number of vehicles (or engines) selected shall not increase the size of either the emission data fleet or the durability data fleet by more than 20 percent or one vehicle (or engine), whichever is greater.

(e)(1) [Reserved]

(2) Any manufacturer may request to certify engine families with combined total sales of fewer than 10,000 light-duty vehicles, light-duty trucks, heavy-duty vehicles, and heavy-duty engines utilizing the procedures contained in § 86.094–14 for emission data vehicle selection and determination of deterioration factors. The deterioration factors shall be applied only to entire engine families.

(f) *Carryover and carryacross of durability and emission data.* In lieu of testing an emission data or durability data vehicle (or engine) selected under paragraph (b) or (c) of this section, and submitting data therefore, a manufacturer may, with the prior written approval of the Administrator, submit exhaust emission data and/or evaporative emission data, as applicable on a similar vehicle (or engine) for which certification has previously been obtained or for which all applicable data required under § 86.094–23 has previously been submitted.

(g)(1) Paragraph (g) of this section applies to light-duty vehicles and light-duty trucks, but does not apply to the production vehicles selected under paragraph (h) of this section.

(2)(i) Where it is expected that more than 33 percent of a carline, within an engine-system combination, shall be equipped with an item (whether that item is standard equipment or an option), the full estimated weight of that item shall be included in the curb weight computation for each vehicle available with that item in that carline, within that engine-system combination.

(ii) Where it is expected that 33 percent or less of the carline, within an engine-system combination, will be equipped with an item (whether that item is standard equipment or an option), no weight for that item will be added in computing the curb weight for any vehicle in that carline, within that engine-system combination, unless that item is standard equipment on the vehicle.

(iii) In the case of mutually exclusive options, only the weight of the heavier option will be added in computing the curb weight.

(iv) Optional equipment weighing less than three pounds per item need not be considered.

(3)(i) Where it is expected that more than 33 percent of a carline, within an engine-system combination, will be equipped with an item (whether that item is standard equipment or an option) that can reasonably be expected to influence emissions, then such items shall actually be installed (unless excluded under paragraph (g)(3)(ii) of this section) on all emission data and durability data vehicles of that carline, within that engine-system combination, on which the items are intended to be offered in production. Items that can reasonably be expected to influence emissions are: air conditioning, power steering, power brakes, and other items determined by the Administrator.

(ii) If the manufacturer determines by test data or engineering evaluation that the actual installation of the optional equipment required by paragraph (g)(3)(i) of this section does not affect the emissions or fuel economy values, the optional equipment need not be installed on the test vehicle.

(iii) The weight of the options shall be included in the design curb weight and also be represented in the weight of the test vehicles.

(iv) The engineering evaluation, including any test data, used to support the deletion of optional equipment from test vehicles, shall be maintained by the manufacturer and shall be made available to the Administrator upon request.

(4) Where it is expected that 33 percent or less of a carline, within an engine-system combination, will be equipped with an item (whether that item is standard equipment or an option) that can reasonably be expected to influence emissions, that item shall not be installed on any emission data vehicle or durability data vehicle of that carline, within that engine-system

combination, unless that item is standard equipment on that vehicle or specifically required by the Administrator.

(h) *Production AMA Durability Program durability data vehicles.* Paragraph (h) of this section applies to light-duty vehicle durability data vehicles selected under the Production AMA Durability Program described in § 86.094–13.

(1) In order to update the durability data to be used to determine a deterioration factor for each engine family group, the Administrator will select durability data vehicles from the manufacturer's production line. Production vehicles will be selected from each model year's production for those vehicles certified using the Production AMA Durability Program procedures.

(i) The Administrator shall select the production durability data vehicle designs from the designs that the manufacturer offers for sale. For each model year and for each engine family group, the Administrator may select production durability data vehicle designs of equal number to the number of engine families within the engine family group, up to a maximum of three vehicles.

(ii) The production durability data vehicles representing the designs selected in paragraph (h)(1)(i) of this section will be randomly selected from the manufacturer's production. The Administrator will make these random selections unless the manufacturer (with prior approval of the Administrator) elects to make the random selections.

(iii) The manufacturer may select additional production durability data vehicle designs from within the engine family group. The production durability data vehicles representing these designs shall be randomly selected from the manufacturer's production in accordance with paragraph (h)(1)(ii) of this section.

(iv) For each production on durability data vehicle selected under paragraph (h)(1) of this section, the manufacturer shall provide to the Administrator (before the vehicle is tested or begins service accumulation) the vehicle identification number. Before the vehicle begins service accumulation the manufacturer shall also provide the Administrator with a description of the durability data vehicle as specified by the Administrator.

(v) In lieu of testing a production durability data vehicle selected under paragraph (h)(1) of this section, and submitting data therefrom, a manufacturer may, with the prior written approval of the Administrator, submit exhaust emission data from a production vehicle of the same configuration for which all applicable data has previously been submitted.

(2) If, within an existing engine family group, a manufacturer requests to certify vehicles of a new design, engine family, emission control system, or with any other durability-related design difference, the Administrator will determine if the existing engine family group deterioration factor is appropriate for the new design. If the Administrator cannot make this determination or deems the deterioration factor not appropriate, the Administrator shall select preproduction durability data vehicles under the provisions of paragraph (c) of this section. If vehicles are then certified using the new design, the Administrator may select production vehicles with the new design under the provisions of paragraph (h)(1) of this section.

(3) If a manufacturer requests to certify vehicles of a new design that the Administrator determines are a new engine family group, the Administrator shall select preproduction durability data vehicles under the provisions of paragraph (c) of this section. If vehicles are then certified using the new design, the Administrator may select production vehicles of that design under the provisions of paragraph (h)(1) of this section.

[58 FR 4014, Jan. 12, 1993, as amended at 59 FR 48498, Sept. 21, 1994; 59 FR 50073, Sept. 30, 1994]

§ 86.094–25 Maintenance.

(a)(1) *Applicability.* This section applies to light-duty vehicles, light-duty trucks, and heavy-duty engines.

(2) Maintenance performed on vehicles, engines, subsystems, or components used to determine exhaust or

evaporative emission deterioration factors is classified as either emission-related or non-emission-related and each of these can be classified as either scheduled or unscheduled. Further, some emission-related maintenance is also classified as critical emission-related maintenance.

(b) This section specifies emission-related scheduled maintenance for purposes of obtaining durability data and for inclusion in maintenance instructions furnished to purchasers of new motor vehicles and new motor vehicles engines under § 86.087–38.

(1) All emission-related scheduled maintenance for purposes of obtaining durability data must occur at the same mileage intervals (or equivalent intervals if engines, subsystems, or components are used) that will be specified in the manufacturer's maintenance instructions furnished to the ultimate purchaser of the motor vehicle or engine under § 86.094–35. This maintenance schedule may be updated as necessary throughout the testing of the vehicle/engine, provided that no maintenance operation is deleted from the maintenance schedule after the operation has been performed on the test vehicle or engine.

(2) Any emission-related maintenance which is performed on vehicles, engines, subsystems, or components must be technologically necessary to assure in-use compliance with the emission standards. The manufacturer must submit data which demonstrate to the Administrator that all of the emission-related scheduled maintenance which is to be performed is technologically necessary. Scheduled maintenance must be approved by the Administrator prior to being performed or being included in the maintenance instructions provided to purchasers under § 86.087–38. The Administrator has determined that emission-related maintenance at shorter intervals than those outlined in paragraphs (b) (3) and (4) of this section is not technologically necessary to ensure in-use compliance. However, the Administrator may determine that maintenance even more restrictive (e.g., longer intervals) than that listed in paragraphs (b) (3) and (4) of this section is also not technologically necessary.

(3) For Otto-cycle light-duty vehicles, light-duty trucks and heavy duty engines, emission-related maintenance in addition to, or at shorter intervals than, that listed in paragraphs (b)(3) (i) through (vii) of this section will not be accepted as technologically necessary, except as provided in paragraph (b)(7) of this section.

(i)(A) The cleaning or replacement of light-duty vehicle or light-duty truck spark plugs shall occur at 30,000 miles of use and at 30,000-mile intervals thereafter.

(B) The cleaning or replacement of Otto-cycle heavy duty engine spark plugs shall occur at 25,000 miles (or 750 hours) of use and at 25,000-mile (or 750-hour) intervals thereafter, for engines certified for use with unleaded fuel only.

(ii) For light-duty vehicles and light-duty trucks, the adjustment, cleaning, repair, or replacement of the items listed in paragraphs (b)(3)(ii) (A) through (D) of this section shall occur at 50,000 miles of use and at 50,000-mile intervals thereafter.

(A) Positive crankcase ventilation valve.

(B) Emission-related hoses and tubes.

(C) Ignition wires.

(D) Idle mixture.

(iii) For heavy-duty engines, the adjustment, cleaning, repair, or replacement of the items listed in paragraphs (b)(3)(iii) (A) through (D) of this section shall occur at 50,000 miles (or 1,500 hours) of use and at 50,000-mile (or 1,500-hour) intervals thereafter.

(A) Positive crankcase ventilation valve.

(B) Emission-related hoses and tubes.

(C) Ignition wires.

(D) Idle mixture.

(iv) For light-duty vehicles, light-duty trucks and heavy-duty engines, the adjustment, cleaning, repair, or replacement of the oxygen sensor shall occur at 80,000 miles (or 2,400 hours) of use and at 80,000-mile (or 2,400-hour) intervals thereafter.

(v) For heavy-duty engines, the adjustment, cleaning, repair, or replacement of the items listed in paragraphs (b)(3)(v) (A) through (G) of this section shall occur at 100,000 miles (or 3,000 hours) of use and at 100,000-mile (or 3,000-hour) intervals thereafter.

(A) Catalytic converter.

(B) Air injection system components.

(C) Fuel injectors.

(D) Electronic engine control unit and its associated sensors (except oxygen sensor) and actuators.

(E) Evaporative emission canister.

(F) Turbochargers.

(G) Carburetors.

(vi) For light-duty vehicles and light-duty trucks, the adjustment, cleaning, repair, or replacement of the items listed in paragraphs (b)(3)(vi) (A) through (I) of this section shall occur at 100,000 miles of use and at 100,000-mile intervals thereafter.

(A) Catalytic converter.

(B) Air injection system components.

(C) Fuel injectors.

(D) Electronic engine control unit and its associated sensors (except oxygen sensor) and actuators.

(E) Evaporative emission canister.

(F) Turbochargers.

(G) Carburetors.

(H) Superchargers.

(I) EGR System including all related filters and control valves.

(vii) For heavy-duty engines certified for use with unleaded fuel only, the adjustment, cleaning, repair, or replacement of the EGR system (including all related filters and control valves) shall occur at 50,000 miles (or 1,500 hours) of use and at 50,000-mile (or 1,500-hour) intervals thereafter.

(4) For diesel-cycle light-duty vehicles, light-duty trucks, and heavy-duty engines, emission-related maintenance in addition to, or at shorter intervals than that listed in paragraphs (b)(4) (i) through (iv) of this section will not be accepted as technologically necessary, except as provided in paragraph (b)(7) of this section.

(i) For heavy-duty engines, the adjustment, cleaning, repair, or replacement of the items listed in paragraphs (b)(4)(i) (A) through (C) of this section shall occur at 50,000 miles (or 1,500 hours) of use and at 50,000-mile (or 1,500-hour) intervals thereafter.

(A) Exhaust gas recirculation system including all related filters and control valves.

(B) Positive crankcase ventilation valve.

(C) Fuel injector tips (cleaning only).

(ii) For light-duty vehicles and light-duty trucks, the adjustment, cleaning, repair, or replacement of the positive crankcase ventilation valve shall occur at 50,000 miles of use and at 50,000-mile intervals thereafter.

(iii) The adjustment, cleaning, repair, or replacement of items listed in paragraphs (b)(4)(iii) (A) through (D) of this section shall occur at 100,000 miles (or 3,000 hours) of use and at 100,000-mile (or 3,000-hour) intervals thereafter for light heavy-duty engines, or, at 150,000 miles (or 4,500 hours) intervals thereafter for medium and heavy-duty engines.

(A) Fuel injectors.

(B) Turbocharger.

(C) Electronic engine control unit and its associated sensors and actuators.

(D) Particulate trap or trap-oxidizer system (including related components).

(iv) For light-duty vehicles and light-duty trucks, the adjustment, cleaning, repair, or replacement shall occur at 100,000 miles of use and at 100,000-mile intervals thereafter of the items listed in paragraphs (b)(4)(iv) (A) through (G) of this section.

(A) Fuel injectors.

(B) Turbocharger.

(C) Electronic engine control unit and its associated sensors and actuators.

(D) Particulate trap or trap-oxidizer system (including related components).

(E) Exhaust gas recirculation system including all related filters and control valves.

(F) Catalytic converter.

(G) Superchargers.

(5) [Reserved]

(6)(i) The components listed in paragraphs (b)(6)(i) (A) through (G) of this section are currently defined as critical emission-related components.

(A) Catalytic converter.

(B) Air injection system components.

(C) Electronic engine control unit and its associated sensors (including oxygen sensor if installed) and actuators.

(D) Exhaust gas recirculation system (including all related filters and control valves).

(E) Positive crankcase ventilation valve.

(F) Evaporative emission control system components (excluding canister air filter).

(G) Particulate trap or trap-oxidizer system.

(ii) All critical emission-related scheduled maintenance must have a reasonable likelihood of being performed in-use. The manufacturer shall be required to show the reasonable likelihood of such maintenance being performed in-use, and such showing shall be made prior to the performance of the maintenance on the durability data vehicle. Critical emission-related scheduled maintenance items which satisfy one of the conditions defined in paragraphs (b)(6)(ii) (A) through (F) of this section will be accepted as having a reasonable likelihood of the maintenance item being performed in-use.

(A) Data are presented which establish for the Administrator a connection between emissions and vehicle performance such that as emissions increase due to lack of maintenance, vehicle performance will simultaneously deteriorate to a point unacceptable for typical driving.

(B) Survey data are submitted which adequately demonstrate to the Administrator that, at an 80 percent confidence level, 80 percent of such engines already have this critical maintenance item performed in-use at the recommended interval(s)

(C) A clearly displayed visible signal system approved by the Administrator is installed to alert the vehicle driver that maintenance is due. A signal bearing the message ''maintenance needed'' or ''check engine,'', or a similar message approved by the Administrator, shall be actuated at the appropriate mileage point or by component failure. This signal must be continuous while the engine is in operation and not be easily eliminated without performance of the required maintenance. Resetting the signal shall be a required step in the maintenance operation. The method for resetting the signal system shall be approved by the Administrator.

(D) A manufacturer may desire to demonstrate through a survey that a critical maintenance item is likely to be performed without a visible signal on a maintenance item for which there is no prior in-use experience without the signal. To that end, the manufacturer may in a given model year market up to 200 randomly selected vehicles per critical emission-related maintenance item without such visible signals, and monitor the performance of the critical maintenance item by the owners to show compliance with paragraph (b)(6)(ii)(B) of this section. This option is restricted to two consecutive model years and may not be repeated until any previous survey has been completed. If the critical maintenance involves more than one engine family, the sample will be sales weighted to ensure that it is representative of all the families in question.

(E) The manufacturer provides the maintenance free of charge, and clearly informs the customer that the maintenance is free in the instructions provided under § 86.087–38.

(F) Any other method which the Administrator approves as establishing a reasonable likelihood that the critical maintenance will be performed in-use.

(iii) Visible signal systems used under paragraph (b)(6)(ii)(C) of this section are considered an element of design of the emission control system. Therefore, disabling, resetting, or otherwise rendering such signals inoperative without also performing the indicated maintenance procedure is a prohibited act under section 203(a)(3) of the Clean Air Act (42 U.S.C. 7522(a) (3)).

(7) *Changes to scheduled maintenance.* (i) For maintenance practices that existed prior to the 1980 model year, only the maintenance items listed in paragraphs (b) (3) and (4) of this section are currently considered by EPA to be emission-related. The Administrator may, however, determine additional scheduled maintenance items that existed prior to the 1980 model year to be emission-related by announcement in a FEDERAL REGISTER Notice. In no event may this notification occur later than September 1 of the calendar year two years prior to the affected model year.

(ii) In the case of any new scheduled maintenance, the manufacturer must submit a request for approval to the Administrator for any maintenance that it wishes to recommend to purchasers and perform during durability determination. New scheduled maintenance is that maintenance which did

not exist prior to the 1980 model year, including that which is a direct result of the implementation of new technology not found in production prior to the 1980 model year. The manufacturer must also include its recommendations as to the category (i.e., emission-related or non-emission-related, critical or non-critical) of the subject maintenance and, for suggested emission-related maintenance, the maximum feasible maintenance interval. Such requests must include detailed evidence supporting the need for the maintenance requested, and supporting data or other substantiation for the recommended maintenance category and for the interval suggested for emission-related maintenance. Requests for new scheduled maintenance must be approved prior to the introduction of the new maintenance. The Administrator will then designate the maintenance as emission-related or non-emission-related. For maintenance items established as emission-related, the Administrator will further designate the maintenance as critical if the component which receives the maintenance is a critical component under paragraph (b)(6) of this section. For each maintenance item designated as emission-related, the Administrator will also establish a technologically necessary maintenance interval, based on industry data and any other information available to EPA. Designations of emission-related maintenance items, along with their identification as critical or non-critical, and establishment of technologically necessary maintenance intervals, will be announced in the FEDERAL REGISTER.

(iii) Any manufacturer may request a hearing on the Administrator's determinations in paragraph (b)(7) of this section. The request shall be in writing and shall include a statement specifying the manufacturer's objections to the Administrator's determinations, and data in support of such objections. If, after review of the request and supporting data, the Administrator finds that the request raises a substantial factual issue, he shall provide the manufacturer a hearing in accordance with § 86.078–6 with respect to such issue.

(c) *Non-emission-related scheduled maintenance* which is reasonable and technologically necessary (e.g., oil change, oil filter change, fuel filter change, air filter change, cooling system maintenance, adjustment of idle speed, governor, engine bolt torque, valve lash, injector lash, timing, adjustment of air pump drive belt tension, lubrication of the exhaust manifold heat control valve, lubrication of carburetor choke linkage, retorqueing carburetor mounting bolts, etc.) may be performed on durability data vehicles at the least frequent intervals recommended by the manufacturer to the ultimate purchaser, (e.g., not at the intervals recommended for severe service).

(d) *Unscheduled maintenance on light-duty durability data vehicles.* (1) Unscheduled maintenance may be performed during the testing used to determine deterioration factors, except as provided in paragraphs (d) (2) and (3) of this section, only under the following provisions defined in paragraphs (d)(1) (i) through (iii) of this section.

(i) A fuel injector or spark plug may be changed if a persistent misfire is detected.

(ii) Readjustment of an Otto-cycle vehicle cold-start enrichment system may be performed if there is a problem of stalling.

(iii) Readjustment of the engine idle speed (curb idle and fast idle) may be performed in addition to that performed as scheduled maintenance under paragraph (c) of this section if the idle speed exceeds the manufacturer's recommended idle speed by 300 rpm or more, or if there is a problem of stalling.

(2) Any other unscheduled vehicle, emission control system, or fuel system adjustment, repair, removal, disassembly, cleaning, or replacement during testing to determine deterioration factors shall be performed only with the advance approval of the Administrator. Such approval will be given if the Administrator:

(i) Has made a preliminary determination that the part failure or system malfunction, or the repair of such failure or malfunction, does not render the vehicle or engine unrepresentative of vehicles or engines in-use and does not require direct access to the combustion chamber, except for spark plug,

fuel injection component, or removable prechamber removal or replacement.

(ii) Has made a determination that the need for maintenance or repairs is indicated by an overt indication of malfunction such as persistent misfiring, engine stalling, overheating, fluid leakage, loss of oil pressure, excessive fuel consumption, or excessive power loss. The Administrator shall be given the opportunity to verify the existence of an overt indication of part failure and/or vehicle/engine malfunction (e.g., misfiring, stalling, black smoke), or an activation of an audible and/or visible signal, prior to the performance of any maintenance to which such overt indication or signal is relevant under the provisions of this section.

(iii) Has made a determination that the OBD system of a durability data vehicle representing an engine family certifying fully to the Federal OBD requirements as specified in § 86.094–17(a) through (h) has specifically detected the problem and has illuminated the malfunction indicator light.

(3) Emission measurement may not be used as a means of determining the need for unscheduled maintenance under paragraph (d)(2) of this section, except under the conditions defined in paragraphs (d)(3) (i) through (ii) of this section.

(i) The Administrator may approve unscheduled maintenance on durability data vehicles based upon a significant change in emission levels that indicates a vehicle or engine malfunction. In these cases the Administrator may first approve specific diagnostic procedures to identify the source of the problem. The Administrator may further approve of specific corrections to the problem after the problem has been identified. The Administrator may only approve the corrective action after it is determined that:

(A) The malfunction was caused by nonproduction build practices or by a previously undetected design problem;

(B) The malfunction will not occur in production vehicles or engines in-use; and

(C) The deterioration factor generated by the durability data vehicle or engine will remain unaffected by the malfunction or by the corrective action (e.g., the malfunction was present for only a short period of time before detection, replacement parts are functionally representative of the proper mileage or hours, etc.).

(ii) Following any unscheduled maintenance approved under paragraph (d)(3)(i) of this section, the manufacturer shall perform an after-maintenance emission test. If the Administrator determines that the after-maintenance emission levels for any pollutant indicates that the deterioration factor is no longer representative of production, the Administrator may disqualify the durability data vehicle or engine.

(4) If the Administrator determines that part failure or system malfunction occurrence and/or repair rendered the vehicle/engine unrepresentative of vehicles in-use, the vehicle/engine shall not be used for determining deterioration factors.

(5) Repairs to vehicle components of a durability data vehicle other than the engine, emission control system, or fuel system, shall be performed only as a result of part failure, vehicle system malfunction, or with the advance approval of the Administrator.

(e) *Maintenance on emission data vehicles and engines.* (1) Adjustment of engine idle speed on emission data vehicles may be performed once before the low-mileage/low-hour emission test point. Any other engine, emission control system, or fuel system adjustment, repair, removal, disassembly, cleaning, or replacement on emission data vehicles shall be performed only with the advance approval of the Administrator.

(2)–(3) [Reserved]

(4) Repairs to vehicle components of an emission data vehicle other than the engine, emission control system, or fuel system, shall be performed only as a result of part failure, vehicle system malfunction, or with the advance approval of the Administrator.

(f) Equipment, instruments, or tools may not be used to identify malfunctioning, maladjusted, or defective engine components unless the same or equivalent equipment, instruments, or tools will be available to dealerships and other service outlets and:

(1) Are used in conjunction with scheduled maintenance on such components; or

(2) Are used subsequent to the identification of a vehicle or engine malfunction, as provided in paragraph (d)(2) of this section for durability data vehicles or in paragraph (e)(1) of this section for emission data vehicles; or

(3) Unless specifically authorized by the Administrator.

(g)(1) Paragraph (g) of this section applies to light-duty vehicles.

(2) Complete emission tests (see §§ 86.106 through 86.145) are required, unless waived by the Administrator, before and after scheduled maintenance approved for durability data vehicles. The manufacturer may perform emission tests before unscheduled maintenance. Complete emission tests are required after unscheduled maintenance which may reasonably be expected to affect emissions. The Administrator may waive the requirement to test after unscheduled maintenance. These test data may be submitted weekly to the Administrator, but shall be air posted or delivered within 7 days after completion of the tests, along with a complete record of all pertinent maintenance, including a preliminary engineering report of any malfunction diagnosis and the corrective action taken. A complete engineering report shall be delivered to the Administrator concurrently with the manufacturer's application for certification.

(h) All test data, maintenance reports, and required engineering reports shall be compiled and provided to the Administrator in accordance with § 86.090–23.

[58 FR 4018, Jan. 12, 1993, as amended at 58 FR 9487, Feb. 19, 1993]

§ 86.094–26 Mileage and service accumulation; emission requirements.

(a)(1) Paragraph (a) of this section applies to light-duty vehicles. It prescribes mileage and service accumulation requirements for durability data vehicles run under either the Standard AMA Durability Program of § 86.094–13(c) or the Production AMA Durability Program of § 86.094–13(d), and for emission data vehicles regardless of the durability program employed. Service accumulation requirements for durability data vehicles run under the Alternative Service Accumulation Program may be found in § 86.094–13(e).

(2) The standard method of whole-vehicle service accumulation for durability data vehicles and for emission data vehicles in model years 1994 and beyond shall be mileage accumulation using the Durability Driving Schedule as specified in appendix IV to this part. A modified procedure may also be used if approved in advance by the Administrator. Except with the advance approval of the Administrator, all vehicles will accumulate mileage at a measured curb weight which is within 100 pounds of the estimated curb weight. If the loaded vehicle weight is within 100 pounds of being included in the next higher inertia weight class as specified in § 86.129, the manufacturer may elect to conduct the respective emission tests at higher loaded vehicle weight.

(3) *Emission data vehicles.* Unless otherwise provided for in § 86.094–23(a), emission data vehicles shall be operated and tested as described in paragraphs (a)(3) (i) and (ii) of this section.

(i) *Otto-cycle.* (A) The manufacturer shall determine, for each engine family, the mileage at which the engine-system combination is stabilized for emission data testing. The manufacturer shall maintain, and provide to the Administrator if requested, a record of the rationale used in making this determination. The manufacturer may elect to accumulate 4,000 miles on each test vehicle within an engine family without making a determination. The manufacturer must accumulate a minimum of 2,000 miles (3,219 kilometers) on each test vehicle within an engine family. All test vehicle mileage must be accurately determined, recorded, and reported to the Administrator. Any vehicle used to represent emission data vehicle selections under § 86.094–24(b)(1) shall be equipped with an engine and emission control system that has accumulated the mileage the manufacturer chose to accumulate on the test vehicle. Fuel economy data generated from certification vehicles selected in accordance with § 86.094–24(b)(1) with engine-system combinations that have accumulated more than 10,000 kilometers (6,200 miles) shall be

factored in accordance with § 600.006(c) of this chapter. Complete exhaust and evaporative (if required) emission tests shall be conducted for each emission data vehicle selection under § 86.094–24(b)(1) . The Administrator may determine under § 86.094–24(f) that no testing is required.

(B) Emission tests for emission data vehicle(s) selected for testing under § 86.094–24(b)(1) (v) or (viii) shall be conducted at the mileage (2,000 mile minimum) at which the engine-system combination is stabilized for emission testing under high-altitude conditions.

(C) Exhaust and evaporative emissions tests for emission data vehicle(s) selected for testing under § 86.094–24(b)(1) (i), (ii), (iii), (iv), or (vii)(B) shall be conducted at the mileage (2,000 mile minimum) at which the engine-system combination is stabilized for emission testing under low-altitude conditions.

(D) For each engine family, the manufacturer will either select one vehicle previously selected under § 86.094–24(b)(1) (i) through (iv) to be tested under high-altitude conditions or provide a statement in accordance with § 86.094–24(b)(1)(v). Vehicles shall meet emission standards under both low- and high-altitude conditions without manual adjustments or modifications. In addition, any emission control device used to conform with the emission standards under high-altitude conditions shall initially actuate (automatically) no higher than 4,000 feet above sea level.

(ii) *Diesel-cycle*. (A) The manufacturer shall determine, for each engine family, the mileage at which the engine-system combination is stabilized for emission data testing. The manufacturer shall maintain, and provide to the Administrator if requested, a record of the rationale used in making this determination. The manufacturer may elect to accumulate 4,000 miles on each test vehicle within an engine family without making a determination. The manufacturer must accumulate a minimum of 2,000 miles (3,219 kilometers) on each test vehicle within an engine family. All test vehicle mileage must be accurately determined, recorded, and reported to the Administrator. Any vehicle used to represent emission data vehicle selections under § 86.094–24(b)(1) shall be equipped with an engine and emission control system that has accumulated the mileage the manufacturer chose to accumulate on the test vehicle. Fuel economy data generated from certification vehicles selected in accordance with § 86.094–24(b)(1) with engine-system combinations that have accumulated more than 10,000 kilometers (6,200 miles) shall be factored in accordance with § 600.006 of this chapter. Complete exhaust emission tests shall be conducted for each emission data vehicle selection under § 86.094–24(b)(1). The Administrator may determine under § 86.094–24(f) that no testing is required.

(B) Emission tests for emission data vehicle(s) selected for testing under § 86.094–24(b)(1)(v) shall be conducted at the mileage (2,000 mile minimum) at which the engine-system combination is stabilized for emission testing under high-altitude conditions.

(C) Exhaust and evaporative emission tests for emission data vehicle(s) selected for testing under § 86.094–24(b)(1) (i), (ii), (iii), (iv), or (vii)(B) shall be conducted at the mileage (2,000 mile minimum) at which the engine-system combination is stabilized for emission testing under low-altitude conditions.

(D) For each engine family, the manufacturer will either select one vehicle previously selected under § 86.094–24(b)(1) (i) through (iv) to be tested under high-altitude conditions or provide a statement in accordance with § 86.094–24(b)(1)(v). Vehicles shall meet emission standards under both low- and high-altitude conditions without manual adjustments or modifications. In addition, any emission control device used to conform with the emission standards under high-altitude conditions shall initially actuate (automatically) no higher than 4,000 feet above sea level.

(4)(i) *Durability data vehicles*. (A) Unless otherwise provided for in § 86.094–13(e) or § 86.094–23(a) or in paragraph (a)(4)(i)(B) of this section, each durability data vehicle shall be driven on the whole-vehicle mileage accumulation cycle specified in paragraph (a)(2) of this section, with all emission control systems installed and operating, up to a mileage endpoint corresponding

to the vehicle's durability useful life as defined in § 86.094–2.

(B) *Extrapolation of durability data and changes to the mileage accumulation cycle.* (*1*) Once a durability vehicle has reached the greater of 75,000 miles or three-quarters of the applicable durability useful life, the manufacturer may petition the Administrator to extrapolate the durability data obtained up to that point out to the durability useful life or to replace the mileage accumulation cycle with an alternative that meets the criteria of paragraph (a)(2) of this section. In the petition, the manufacturer shall supplement the durability vehicle data with other information demonstrating the durability of the vehicle's emission control components and systems at or beyond the durability useful life.

(*2*) Factors the Administrator will consider in evaluating petitions for extrapolation of durability data or for changes to the mileage accumulation cycle include, but are not limited to, any unusual scheduled maintenance, unscheduled maintenance, the general linearity and scatter of the actual data, reasonable explanations for all outlier data, the technical validity of any substitute mileage accumulation cycle, and evidence supplied by the vehicle manufacturer of component and system durability.

(*3*) If a petition for extrapolation of durability data is approved, the endpoint for whole-vehicle mileage accumulation of the durability data vehicle shall be the mileage attained by the vehicle as reflected in the petition.

(*4*) Discontinuation of a durability data vehicle shall be allowed only with the consent of the Administrator.

(C) Complete exhaust emission tests shall be made at nominal test point mileage intervals that the manufacturer determines. At a minimum, two complete exhaust emission tests shall be made. The first test shall be made at a distance not greater than 6,250 miles. The last shall be made at the mileage accumulation endpoint determined in paragraph (a)(4)(i) (A) or (B) of this section, whichever is applicable.

(D) Except with advance approval of the Administrator, the mileage interval between nominal test points must be of equal length except for the interval between zero miles and the first test, and any interval before or after testing conducted in conjunction with vehicle maintenance as specified in § 86.094–25(g)(2).

(ii) The manufacturer may, at its option, alter the durability data vehicle at the selected nominal test point to represent emission data vehicle(s) within the same engine-system combination and perform emission tests on the altered vehicle. Upon completion of emission testing, the manufacturer may return the test vehicle to the durability data vehicle configuration and continue mileage accumulation.

(5)(i) All tests required by this subpart on emission data vehicles shall be conducted at a mileage equal to or greater than the mileage the manufacturer determines under paragraph (a)(3) of this section.

(ii) All tests required by this subpart on durability data vehicles shall be conducted within 250 miles of each of the nominal test points. This ±250 mile test point mileage tolerance may be modified with the advance approval of the Administrator if the basis for the written request is to prevent an interruption of durability mileage accumulation due to test scheduling conflicts for weekends, holidays, and other similar circumstances.

(6)(i)(A) The manufacturer may conduct multiple tests at any test point at which the data are intended to be used in the deterioration factor. At each test point where multiple tests are conducted, the test results from all valid tests shall be averaged to determine the data point to be used in the deterioration factor calculation, except under paragraph (a)(6)(i)(B) of this section. The test results from emission tests performed before maintenance affecting emissions shall not be averaged with test results after the maintenance.

(B) The manufacturer is not required to average multiple tests if the manufacturer conducts no more than three tests at each test point and if the number of tests at each test point is equal. All test points must be treated the same for all exhaust pollutants.

(ii) The results of all emission testing shall be supplied to the Administrator. The manufacturer shall furnish to the

Administrator explanation for voiding any test. The Administrator will determine if voiding the test was appropriate based upon the explanation given by the manufacturer for the voided test. Tests between test points may be conducted as required by the Administrator. Data from all tests (including voided tests) may be submitted weekly to the Administrator, but shall be air posted or delivered to the Administrator within 7 days after completion of the test. In addition, all test data shall be compiled and provided to the Administrator in accordance with § 86.091–23. Where the Administrator conducts a test on a durability data vehicle at a prescribed test point, the results of that test will be used in the calculation of the deterioration factor.

(iii) The results of all emission tests shall be rounded to the number of places to the right of the decimal point indicated by expressing the applicable emission standard of this subpart to one additional significant figure, in accordance with the rounding off method specified in ASTM E 29–67 (reapproved 1980) (''Standard recommended practice for indicating which places of figures are to be considered significant in specified limiting values,'' American Society for Testing and Materials). This incorporation by reference was approved by the Director of the Federal Register in accordance with 5 U.S.C. 552(a) and 1 CFR part 51. Copies may be obtained from American Society for Testing and Materials, 1916 Race St., Philadelphia, PA 19103. Copies may be inspected at the U.S. Environmental Protection Agency, Air Docket Section, room M–1500, 1200 Pennsylvania Ave., NW., Washington, DC 20460 or at the National Archives and Records Administration (NARA). For information on the availability of this material at NARA, call 202–741–6030, or go to: *http://www.archives.gov/federal_register/code_of_federal_regulations/ibr_locations.html.*

(7) Whenever a manufacturer intends to operate and test a vehicle which may be used for emission or durability data, the manufacturer shall retain in its records all information concerning all emissions tests and maintenance, including vehicle alterations to represent other vehicle selections. For emission data vehicles, this information shall be submitted, including the vehicle description and specification information required by the Administrator, to the Administrator following the emission data test. For durability data vehicles, this information shall be submitted following the 5,000-mile test.

(8) The data from emission data vehicles and durability data vehicles obtained pursuant to the provisions of this section will be used in the calculations under § 86.094–28.

(9)(i) The Administrator may elect to operate and test any test vehicle during all or any part of the mileage accumulation and testing procedure. In such cases, the manufacturer shall provide the vehicle(s) to the Administrator with all information necessary to conduct this testing.

(ii) The test procedures in §§ 86.106 through 86.145 will be followed by the Administrator. The Administrator will test the vehicles at each test point. Maintenance may be performed by the manufacturer under such conditions as the Administrator may prescribe.

(iii) The data developed by the Administrator for the engine-system combination shall be combined with any applicable data supplied by the manufacturer on other vehicles of that combination to determine the applicable deterioration factors for the combination. In the case of a significant discrepancy between data developed by the Administrator and that submitted by the manufacturer, the Administrator's data shall be used in the determination of deterioration factors.

(10) Emission testing of any type with respect to any certification vehicle other than that specified in this part is not allowed except as such testing may be specifically authorized by the Administrator.

(11) This section does not apply to testing conducted to meet the requirements of § 86.091–23(b)(2).

(b)(1) Paragraph (b) of this section applies to light-duty trucks.

(2) Four types of mileage or service accumulation are applicable to light-duty trucks, as described in paragraphs (b)(2) (i) through (iv) of this section.

(i) Paragraph (b)(2)(i) of this section applies to service accumulation conducted under the Standard Self-Approval Durability Program of § 86.094–13(f). This type of service accumulation is applicable for model years 1994 and beyond only. The manufacturer determines the form and extent of this service accumulation, consistent with good engineering practice, and describes it in the application for certification. Service accumulation under the Standard Self-Approval Durability Program is conducted on vehicles, engines, subsystems, or components selected by the manufacturer under § 86.094–24(c)(2)(i).

(ii) Paragraph (b)(2)(ii) of this section applies to service accumulation conducted under the Alternative Service Accumulation Durability Program of § 86.094–13(e). This type of service accumulation is applicable for model years 1994 and beyond only. The service accumulation method is developed by the manufacturer to be consistent with good engineering practice and to accurately predict the deterioration of the vehicle's emissions in actual use over its full useful life. The method is subject to advance approval by the Administrator and to verification by an in-use verification program conducted by the manufacturer under § 86.094–13(e)(5).

(iii) Paragraph (b)(2)(iii) of this section applies to mileage accumulation of the duration selected by the manufacturer on emission data vehicles selected under § 86.094–24(b)(1). The procedure for mileage accumulation will be the Durability Driving Schedule as specified in appendix IV to this part. A modified procedure may also be used if approved in advance by the Administrator. Except with the advance approval of the Administrator, all vehicles will accumulate mileage at a measured curb weight which is within 100 pounds of the estimated curb weight. If the loaded vehicle weight is within 100 pounds of being included in the next higher inertia weight class as specified in § 86.129, the manufacturer may elect to conduct the respective emission tests at higher loaded vehicle weight.

(iv) Service or mileage accumulation may also be part of the test procedures used by the manufacturer to establish evaporative emission deterioration factors.

(3) Exhaust emission deterioration factors will be determined on the basis of the mileage or service accumulation described in paragraph (b)(2) (i) or (ii) of this section and related testing, according to the manufacturer's procedures.

(4) Each emission data vehicle shall be operated and tested as follows:

(i) *Otto-cycle.* (A) The manufacturer shall determine, for each engine family, the mileage at which the engine-system combination is stabilized for emission data testing. The manufacturer shall maintain, and provide to the Administrator if requested, a record of the rationale used in making this determination. The manufacturer may elect to accumulate 4,000 miles on each test vehicle within an engine family without making a determination. The manufacturer must accumulate a minimum of 2,000 miles (3,219 kilometers) on each test vehicle within an engine family. All test vehicle mileage must be accurately determined, recorded, and reported to the Administrator. Any vehicle used to represent emission data vehicle selections under § 86.094–24(b)(1) shall be equipped with an engine and emission control system that has accumulated the mileage the manufacturer chose to accumulate on the test vehicle. Fuel economy data generated from certification vehicles selected in accordance with § 86.094–24(b)(1) with engine-system combinations that have accumulated more than 10,000 kilometers (6,200 miles) shall be factored in accordance with § 600.006 of this chapter. Complete exhaust emission tests shall be conducted for each emission data vehicle selection under § 86.094–24(b)(1). The Administrator may determine under § 86.094–24(f) that no testing is required.

(B) Emission tests for emission data vehicle(s) selected for testing under § 86.094–24(b)(1) (v) or (viii) shall be conducted at the mileage (2,000 mile minimum) at which the engine-system combination is stabilized for emission testing or at 6,436 kilometers (4,000 miles) under high-altitude conditions.

(C) Exhaust and evaporative emission tests for emission data vehicle(s) selected for testing under § 86.094–24(b)(1)

(ii), (iii), (iv)(A), or (vii)(B) shall be conducted at the mileage (2,000 mile minimum) at which the engine-system combination is stabilized for emission testing or at 6,436 kilometer (4,000 mile) test point under low-altitude conditions.

(D) If the manufacturer recommends adjustments or modifications in order to conform to emission standards at high altitude, such adjustments or modifications shall be made to the test vehicle selected under § 86.094–24(b)(1)(v) and (viii) (in accordance with the instructions to be provided to the ultimate purchaser) before being tested under high-altitude conditions.

(ii) *Diesel-cycle*. (A) The manufacturer shall determine, for each engine family, the mileage at which the engine-system combination is stabilized for emission data testing. The manufacturer shall maintain, and provide to the Administrator if requested, a record of the rationale used in making this determination. The manufacturer may elect to accumulate 4,000 miles on each test vehicle within an engine family without making a determination. The manufacturer must accumulate a minimum of 2,000 miles (3,219 kilometers) on each test vehicle within an engine family. All test vehicle mileage must be accurately determined, recorded, and reported to the Administrator. Any vehicle used to represent emission data vehicle selections under § 86.094–24(b)(1) shall be equipped with an engine and emission control system that has accumulated the mileage the manufacturer chose to accumulate on the test vehicle. Fuel economy data generated from certification vehicles selected in accordance with § 86.094–24(b)(1) with engine-system combinations that have accumulated more than 10,000 kilometers (6,200 miles) shall be factored in accordance with § 600.006(c) of this chapter. Complete exhaust emission tests shall be conducted for each emission data vehicle selection under § 86.094–24(b)(1). The administrator may determine under § 86.094–24(f) that no testing is required.

(B) Emission tests for emission data vehicle(s) selected for testing under § 86.094–24(b)(1)(v) shall be conducted at the mileage (2,000 mile minimum) at which the engine-system combination is stabilized for emission testing or at the 6,436 kilometer (4,000 mile) test point under high-altitude conditions.

(C) Exhaust and evaporative emission tests for emission data vehicle(s) selected for testing under § 86.094–24(b)(1)(ii), (iii), and (iv) shall be conducted at the mileage (2,000 mile minimum) at which the engine-system combination is stabilized for emission testing or at the 6,436 kilometer (4,000 mile) test point under low-altitude conditions.

(D) If the manufacturer recommends adjustments or modifications in order to conform to emission standards at high-altitude, such adjustments or modifications shall be made to the test vehicle selected under § 86.094–24(b)(1)(v) and (viii) (in accordance with the instructions to be provided to the ultimate purchaser) before being tested under high-altitude conditions.

(iii) [Reserved]

(iv) All tests required by this subpart on emission data vehicles shall be conducted at a mileage equal to or greater than the mileage the manufacturer determines under paragraph (b)(4) of this section.

(c)(1) Paragraph (c) of this section applies to heavy-duty engines.

(2) Two types of service accumulation are applicable to heavy-duty engines, as described in paragraphs (c)(2) (i) and (ii) of this section.

(i) Service accumulation on engines, subsystems, or components selected by the manufacturer under § 86.094–24(c)(3)(i). The manufacturer determines the form and extent of this service accumulation, consistent with good engineering practice, and describes it in the application for certification.

(ii) Dynamometer service accumulation on emission data engines selected under § 86.094–24(b) (2) or (3). The manufacturer determines the engine operating schedule to be used for dynamometer service accumulation, consistent with good engineering practice. A single engine operating schedule shall be used for all engines in an engine family-control system combination. Operating schedules may be different for different combinations.

(3) Exhaust emission deterioration factors will be determined on the basis of the service accumulation described in paragraph (b)(2)(i) of this section

and related testing, according to the manufacturer's procedures.

(4) The manufacturer shall determine, for each engine family, the number of hours at which the engine system combination is stabilized (no less than 62 hours for catalyst equipped) for emission data testing. The manufacturer shall maintain, and provide to the Administrator if requested, a record of the rationale used in making this determination. The manufacturer may elect to accumulate 125 hours on each test engine within an engine family without making a determination. Any engine used to represent emission data engine selections under § 86.094–24(b)(2) shall be equipped with an engine system combination that has accumulated at least the number of hours determined under this paragraph. Complete exhaust emission tests shall be conducted for each emission data engine selection under § 86.094–24(b)(2). Evaporative emission controls need not be connected provided normal operating conditions are maintained in the engine induction system. The Administrator may determine under § 86.094–24(f) that no testing is required.

(d)(1) Paragraph (d) of this section applies to both light-duty trucks and heavy-duty engines.

(2)(i) The results of all emission testing shall be supplied to the Administrator. The manufacturer shall furnish to the Administrator explanation for voiding any test. The Administrator will determine if voiding the test was appropriate based upon the explanation given by the manufacturer for the voided test. Tests between test points may be conducted as required by the Administrator. Data from all tests (including voided tests) may be submitted weekly to the Administrator, but shall be air posted or delivered to the Administrator within 7 days after completion of the test. In addition, all test data shall be compiled and provided to the Administrator in accordance with § 86.094–23. Where the Administrator conducts a test on a durability data vehicle at a prescribed test point, the results of that test will be used in the calculation of the deterioration factor.

(ii) The results of all emission tests shall be recorded and reported to the Administrator. These test results shall be rounded, in accordance with ASTM E 29–67 (reapproved 1980) (as referenced in paragraph (a)(6)(iii) of this section), to the number of decimal places contained in the applicable emission standard expressed to one additional significant figure.

(3) Whenever a manufacturer intends to operate and test a vehicle (or engine) which may be used for emission data, the manufacturer shall retain in its records all information concerning all emissions tests and maintenance, including vehicle (or engine) alterations to represent other vehicle (or engine) selections. This information shall be submitted, including the vehicle (or engine) description and specification information required by the Administrator, to the Administrator following the emission data test.

(4)–(5) [Reserved]

(6) Emission testing of any type with respect to any certification vehicle or engine other than that specified in this subpart is not allowed except as such testing may be specifically authorized by the Administrator.

[58 FR 4021, Jan. 12, 1993, as amended at 59 FR 36369, July 18, 1994; 62 FR 11082, Mar. 11, 1997; 62 FR 44875, Aug. 22, 1997]

EDITORIAL NOTE: At 65 FR 47325, Aug. 2, 2000, § 86.094–26 was amended in paragraph (a)(6)(iii) by revising the phrase ''401 M Street SW'' to read ''401 M St., SW.''; however this exact phrase does not exist in this paragraph in the 2000 edition of this volume.

§ 86.094–28 Compliance with emission standards.

(a)(1) Paragraph (a) of this section applies to lightduty vehicles.

(2) Each exhaust and evaporative emission standard (and family particulate emission limit, as appropriate) of § 86.094–8 applies to the emissions of vehicles for the appropriate useful life as defined in §§ 86.094–2 and 86.094–8.

(3) Since it is expected that emission control efficiency will change with mileage accumulation on the vehicle, the emission level of a vehicle which has accumulated mileage equal to the specified useful life will be used as the basis for determining compliance with the standard (or family particulate emission limit, as appropriate).

(4) The procedure for determining compliance of a new motor vehicle

with exhaust and evaporative emission standards (or family particulate emission limit, as appropriate) is as described in paragraphs (a)(4) (i) through (v) of this section, except where specified by paragraph (a)(7) of this section for the Production AMA Durability Program.

(i) Separate emission deterioration factors shall be determined from the exhaust emission results of the durability data vehicle(s) for each engine-system combination. A separate evaporative emission deterioration factor shall be determined for each evaporative emission family-evaporative emission control system combination from the testing conducted by the manufacturer (gasoline-fueled and methanol-fueled vehicles only).

(A) The applicable results to be used, unless excluded by paragraph (a)(4)(i)(A)(*4*) of this section, in determining the exhaust emission deterioration factors for each engine-system combination shall be those described in paragraphs (a)(4)(i)(A) (*1*) through (*3*) of this section.

(*1*) All valid exhaust emission data from the tests required under § 86.094–26(a)(4) except the zero-mile tests. This shall include the official test results, as determined in § 86.094–29 for all tests conducted on all durability data vehicles of the combination selected under § 86.094–24(c) (including all vehicles elected to be operated by the manufacturer under § 86.094–24(c)(1)(ii)).

(*2*) All exhaust emission data from the tests conducted before and after the scheduled maintenance provided in § 86.094–25.

(*3*) All exhaust emission data from tests required by maintenance approved under § 86.094–25, in those cases where the Administrator conditioned his approval for the performance of such maintenance on the inclusion of such data in the deterioration factor calculation.

(*4*) The manufacturer has the option of applying an outlier test point procedure to completed durability data within its certification testing program for a given model year. The outlier procedure will be specified by the Administrator. For any pollutant, durability data test points that are identified as outliers shall not be included in the determination of deterioration factors if the manufacturer has elected this option. The manufacturer shall specify to the Administrator before the certification of the first engine family for that model year, if it intends to use the outlier procedure. The manufacturer may not change procedures after the first engine family of the model year is certified. Where the manufacturer chooses to apply both the outlier procedure and averaging (as allowed under § 86.094–26(a)(6)(i)) to the same data set, the outlier procedure shall be completed prior to applying the averaging procedure.

(B)(*1*) *Line crossing.* For each exhaust constituent to which a standard in § 86.094–8 applies, all applicable exhaust emission results shall be rounded to the nearest mile and plotted as a function of the mileage on the system. The best fit straight line, fitted by the method of least squares, shall be drawn through all these data points. The data for a given exhaust constituent will be acceptable for use in the calculation of deterioration factors only if the first official test point as determined in § 86.094–26(a)(4)(i)(C), the interpolated intermediate useful life mile point, and the interpolated full useful life mile point on this line, as applicable, are each less than or equal to the respective low-altitude standards provided in § 86.094–8. An exception to this where data are still acceptable is when a best fit straight line crosses an applicable standard but no data points exceeded the standard. This exception shall not apply when mileage accumulation has been curtailed before the durability useful life has been reached, under the provisions of § 86.094–26(a)(4)(i)(B).

(*2*) *Exhaust deterioration factor determination.* Multiplicative exhaust emission deterioration factors shall be calculated for each standard and for each engine-system combination from points on the regression line derived in paragraph (a)(4)(i)(B)(*1*) of this section, and in accordance with paragraphs (a)(4)(i)(B)(2) (*i*) and (*ii*) of this section.

(*i*) Factor=Exhaust emissions at the useful life mileage for that standard divided by exhaust emissions at 4,000 miles.

(*ii*) These interpolated values shall be carried out to a minimum of four

places to the right of the decimal point before dividing one by the other to determine the deterioration factor. The results shall be rounded to three places to the right of the decimal point in accordance with ASTM E 29–67 (reapproved 1980) (''Standard recommended practice for indicating which places of figures are to be considered significant in specified limiting values,'' American Society for Testing and Materials). This incorporation by reference was approved by the Director of the Federal Register in acccordance with 5 U.S.C. 552(a) and 1 CFR part 51. Copies may be obtained from American Society for Testing and Materials, 1916 Race St., Philadelphia, PA 19103. Copies may be inspected at the U.S. Environmental Protection Agency, Air Docket Section, room M–1500, 1200 Pennsylvania Ave., NW., Washington, DC 20460 or at the National Archives and Records Administration (NARA). For information on the availability of this material at NARA, call 202–741–6030, or go to: *http://www.archives.gov/federal_register/code_of_federal_regulations/ibr_locations.html*.

(*iii*) When calculating intermediate and full useful life deterioration factors all data points should be included in the calculations, except that total hydrocarbon (THC) test points beyond the 50,000-mile (useful life) test point shall not be included in the calculations.

(*iv*) The calculation specified in paragraph (a)(4)(i)(B)(*2*) of this section may be modified with advance approval of the Administrator for engine-system combinations which are certified under the Alternative Service Accumulation Durability Program specified in § 86.094–13(e).

(C) *Evaporative deterioration factor determination*. An evaporative emissions deterioration factor (gasoline-fueled and methanol-fueled vehicles only) shall be determined from the testing conducted as described in § 86.094–21(b)(4)(i) and in accordance with paragraphs (a)(4)(i)(C) (*1*) and (*2*) of this section, for each evaporative emission family-evaporative emission control system combination to indicate the evaporative emission level at the applicable useful life relative to the evaporative emission level at 4,000 miles.

(*1*) Factor=Evaporative emission level at the useful life mileage for that standard minus the evaporative emission level at 4,000 miles.

(*2*) The factor shall be established to a minimum of two places to the right of the decimal.

(ii)(A)(*1*) The official exhaust emission test results for each applicable exhaust emission standard for each emission data vehicle at the selected test point shall be multiplied by the appropriate deterioration factor: *Provided*, That if a deterioration factor as computed in paragraph (a)(4)(i)(B) of this section is less than one, that deterioration factor shall be one for the purposes of this paragraph.

(*2*) The calculation specified in paragraph (a)(4)(ii)(A)(*1*) of this section may be modified with advance approval of the Administrator for engine-system combinations which are certified under the Alternative Service Accumulation Durability Program specified in § 86.094–13(e).

(B) The official evaporative emission test results (gasoline-fueled and methanol-fueled vehicles only) for each evaporative emission data vehicle at the selected test point shall be adjusted by addition of the appropriate deterioration factor, provided that if a deterioration factor as computed in paragraph (a)(4)(i)(C) of this section is less than zero, that deterioration factor shall be zero for the purposes of this paragraph.

(iii) The emissions to compare with the standard (or the family particulate emission limit, as appropriate) shall be the adjusted emissions of paragraphs (a)(4)(ii) (A) and (B) of this section for each emission data vehicle. Before any emission value is compared with the standard (or the family particulate emission limit, as appropriate) it shall be rounded, in accordance with ASTM E 29–67 (reapproved 1980) (as referenced in paragraph (a)(4)(i)(B)(*2*)(*ii*) of this section), to two significant figures. The rounded emission values may not exceed the standard (or the family particulate emission limit, as appropriate).

(iv) Every test vehicle of an engine family must comply with the exhaust

emission standards (or the family particulate emission limit, as appropriate), as determined in paragraph (a)(4)(iii) of this section, before any vehicle in that family may be certified.

(v) Every test vehicle of an evaporative emission family must comply with the evaporative emission standard, as determined in paragraph (a)(4)(iii) of this section, before any vehicle in that family may be certified.

(5) If a manufacturer chooses to change the level of any family particulate emission limit(s) in the particulate averaging program, compliance with the new limit(s) must be based upon existing certification data.

(6) If a manufacturer chooses to participate in the diesel particulate averaging program, the production-weighted average of the family particulate emission limits of all affected engine families must comply with the particulate standards in § 86.094–8(a)(1)(iv), or the composite particulate standard defined in § 86.094–2, as appropriate, at the end of the production year.

(7) The procedure to determine the compliance of new motor vehicles in the Production AMA Durability Program described in § 86.094–13 is the same as described in paragraphs (a)(4) (iii) through (v) of this section. For the engine families that are included in the Production AMA Durability Program, the exhaust emission deterioration factors used to determine compliance shall be those that the Administrator has approved under § 86.094–13. The evaporative emission deterioration factor for each evaporative emission family shall be determined and applied according to paragraph (a)(4) of this section. The procedures to determine the minimum exhaust emission deterioration factors required under § 86.094–13(d) are as described in paragraphs (a)(7) (i) and (ii) of this section.

(i) Separate deterioration factors shall be determined from the exhaust emission results of the durability data vehicles for each emission standard applicable under § 86.094–8, for each engine family group. The evaporative emission deterioration factor for each evaporative family will be determined and applied in accordance with paragraph (a)(4) of this section.

(ii) The deterioration factors for each engine family group shall be determined by the Administrator using historical durability data from as many as three previous model years. These data will consist of deterioration factors generated by durability data vehicles representing certified engine families and of deterioration factors from vehicles selected under § 86.094–24(h) . The Administrator shall determine how these data will be combined for each engine family group.

(A) The test result to be used in the calculation of each deterioration factor to be combined for each engine family group shall be those test results specified in paragraph (a)(4)(i)(A) of this section.

(B) For each durability data vehicle selected under § 86.094–24(h), all applicable exhaust emission results shall be plotted as a function of the mileage on the system rounded to the nearest mile, and the best fit straight lines, fitted by method of least squares, shall be drawn through all these data points. The exhaust deterioration factor for each durability data vehicle shall be calculated as specified in paragraph (a)(4)(i)(B) of this section.

(C) *Line-crossing.* The line-crossing criteria of § 86.094–28 (a)(4)(i)(B) apply.

(*1*) The Administrator will not accept for certification line-crossing data from preproduction durability data vehicles selected under § 86.094–24(c).

(*2*) The Administrator will not accept for certification line-crossing data from production durability data vehicles selected under § 86.094–24(h)(1) unless the 4,000-mile test result multiplied by the engine family group deterioration factor does not exceed the applicable emission standards. The deterioration factors used for this purpose shall be those that were used in the certification of the production vehicle. Manufacturers may calculate this product immediately after the 4,000-mile test of the vehicle. If the product exceeds the applicable standards, the manufacturer may, with the approval of the Administrator, discontinue the vehicle and substitute a new vehicle. The manufacturer may continue the original vehicle, but the data will not be acceptable if line crossing occurs.

(b)(1) Paragraph (b) of this section applies to light-duty trucks.

(2) Each exhaust and evaporative emission standard (and family particulate emission limit, as appropriate) of § 86.094–9 applies to the emissions of vehicles for the appropriate useful life as defined in §§ 86.094–2 and 86.094–9.

(3) Since emission control efficiency generally decreases with the accumulation of mileage on the vehicle, deterioration factors will be used in combination with emission data vehicle test results as the basis for determining compliance with the standards (or family emission limits, as appropriate).

(4)(i) Paragraph (b)(4) of this section describes the procedure for determining compliance of a new vehicle with exhaust emission standards (or family emission limits, as appropriate), based on deterioration factors. If the manufacturer certifies under the Standard Self-Approval Program as specified in § 86.094–13(f), the manufacturer supplies the deterioration factors. If the manufacturer certifies under the Alternative Service Accumulation Durability Program as specified in § 86.094–13(e), the applicable procedure for the determination of deterioration factors for light-duty trucks is the same as that described in paragraph (a)(4) of this section for light-duty vehicles.

(ii) Separate exhaust emission deterioration factors, determined from tests of vehicles, engines, subsystems, or components conducted by the manufacturer, shall be supplied for each standard and for each engine-system combination.

(iii) The official exhaust emission results for each applicable exhaust emission standard for each emission data vehicle at the selected test point shall be adjusted by multiplication by the appropriate deterioration factor. However, if the deterioration factor supplied by the manufacturer is less than one, it shall be one for the purposes of this paragraph.

(iv) The emission values to compare with the standards (or family emission limits, as appropriate) shall be the adjusted emission values of paragraph (b)(4)(iii) of this section rounded to two significant figures in accordance with ASTM E 29–67 (reapproved 1980) (as referenced in paragraph (a)(4)(i)(B)(*2*)(*ii*) of this section) for each emission data engine.

(5)(i) Paragraphs (b)(5)(i) (A) and (B) of this section apply only to manufacturers electing to participate in the particulate averaging program.

(A) If a manufacturer chooses to change the level of any family particulate emission limit(s), compliance with the new limit(s) must be based upon existing certification data.

(B) The production-weighted average of the family particulate emission limits of all applicable engine families, rounded to two significant figures in accordance with ASTM E 29–67 (reapproved 1980) (as referenced in paragraph (a)(4)(i)(B)(*2*)(*ii*) of this section), must comply with the particulate standards in § 86.094–9(a)(1)(iv) or (d)(1)(iv), or the composite particulate standard as defined in § 86.094–2, as appropriate, at the end of the product year.

(ii) Paragraphs (b)(5)(ii) (A) and (B) of this section apply only to manufacturers electing to participate in the NO_X averaging program.

(A) If a manufacturer chooses to change the level of any family NO_X emission limit(s), compliance with the new limit(s) must be based upon existing certification data.

(B) The production-weighted average of the family NO_X emission limits of all applicable engine families, rounded to two significant figures in accordance with ASTM E 29–67 (reapproved 1980) (as referenced in paragraph (a)(4)(i)(B)(*2*)(*ii*) of this section), must comply with the NO_X emission standards of § 86.094–9(a)(1)(iii) (A) or (B) of § 86.094–9(d)(1)(iii) (A) or (B), or the composite NO_X standard as defined in § 86.094–2, at the end of the product year.

(6) [Reserved]

(7)(i) Paragraph (b)(7) of this section describes the procedure for determining compliance of a new vehicle with evaporative emission standards. The procedure described here shall be used for all vehicles in all model years.

(ii) The manufacturer shall determine, based on testing described in § 86.091–21(b)(4)(i), and supply an evaporative emission deterioration factor for

each evaporative emission family-evaporative emission control system combination. The factor shall be calculated by subtracting the emission level at the selected test point from the emission level at the useful life point.

(iii) The official evaporative emission test results for each evaporative emission data vehicle at the selected test point shall be adjusted by the addition of the appropriate deterioration factor. However, if the deterioration factor supplied by the manufacturer is less than zero, it shall be zero for the purposes of this paragraph.

(iv) The emission value to compare with the standards shall be the adjusted emission value of paragraph (b)(7)(iii) of this section rounded to two significant figures in accordance with ASTM E 29–67 (reapproved 1980) (as referenced in paragraph (a)(4)(i)(B)(*2*)(*ii*) of this section) for each evaporative emission data vehicle.

(8) Every test vehicle of an engine family must comply with all applicable standards (and family emission limits, as appropriate), as determined in paragraphs (b)(4)(iv) and (b)(7)(iv) of this section, before any vehicle in that family will be certified.

(c)(1) Paragraph (c) of this section applies to heavy-duty engines.

(2) The exhaust emission standards (or family emission limits, as appropriate) for Otto-cycle engines in § 86.094–10 or for diesel-cycle engines in § 86.094–11 apply to the emissions of engines for their useful life.

(3) Since emission control efficiency generally decreases with the accumulation of service on the engine, deterioration factors will be used in combination with emission data engine test results as the basis for determining compliance with the standards.

(4)(i) Paragraph (c)(4) of this section describes the procedure for determining compliance of an engine with emission standards (or family emission limits, as appropriate), based on deterioration factors supplied by the manufacturer.

(ii) Separate exhaust emission deterioration factors, determined from tests of engines, subsystems, or components conducted by the manufacturer, shall be supplied for each engine-system combination. For Otto-cycle engines, separate factors shall be established for transient HC (THCE), CO, and NO_X; and idle CO, for those engines utilizing aftertreatment technology (e.g., catalytic converters). For diesel-cycle engines, separate factors shall be established for transient HC (THCE), CO, NO_X. and exhaust particulate. For diesel-cycle smoke testing, separate factors shall also be established for the acceleration mode (designated as ''A''), the lugging mode (designated as ''B''), and peak opacity (designated as ''C'').

(iii)(A) Paragraphs (c)(4)(iii)(A) (*1*) and (*2*) of this section apply to Otto-cycle heavy-duty engines.

(*1*) *Otto-cycle heavy-duty engines not utilizing aftertreatment technology (e.g., catalytic converters).* For transient HC (THCE), CO, and NO_X. the official exhaust emission results for each emission data engine at the selected test point shall be adjusted by the addition of the appropriate deterioration factor. However, if the deterioration factor supplied by the manufacturer is less than zero, it shall be zero for the purposes of this paragraph.

(*2*) *Otto-cycle heavy-duty engines utilizing aftertreatment technology (e.g., catalytic converters).* For transient HC (THCE), CO, and NO_X. and for idle CO, the official exhaust emission results for each emission data engine at the selected test point shall be adjusted by multiplication by the appropriate deterioration factor. However, if the deterioration factor supplied by the manufacturer is less than one, it shall be one for the purposes of this paragraph.

(B) Paragraph (c)(4)(iii)(B) of this section applies to diesel-cycle heavy-duty engines.

(*1*) *Diesel-cycle heavy-duty engines not utilizing aftertreatment technology (e.g., particulate traps).* For transient HC (THCE), CO, NO_X. and exhaust particulate, the official exhaust emission results for each emission data engine at the selected test point shall be adjusted by the addition of the appropriate deterioration factor. However, if the deterioration factor supplied by the manufacturer is less than zero, it shall be zero for the purposes of this paragraph.

(*2*) *Diesel-cycle heavy-duty engines utilizing aftertreatment technology (e.g., particulate traps).* For transient HC

(THCE), CO, NO_X. and exhaust particulate, the official exhaust emission results for each emission data engine at the selected test point shall be adjusted by multiplication by the appropriate deterioration factor. However, if the deterioration factor supplied by the manufacturer is less than one, it shall be one for the purposes of this paragraph.

(*3*) *Diesel-cycle heavy-duty engines only*. For acceleration smoke (''A''), lugging smoke (''B''), and peak smoke (''C''), the official exhaust emission results for each emission data engine at the selected test point shall be adjusted by the addition of the appropriate deterioration factor. However, if the deterioration factor supplied by the manufacturer is less than zero, it shall be zero for the purposes of this paragraph.

(iv) The emission values to compare with the standards (or family emission limits, as appropriate) shall be the adjusted emission values of paragraph (c)(4)(iii) of this section, rounded to the same number of significant figures as contained in the applicable standard in accordance with ASTM E 29–67 (reapproved 1980) (as referenced in paragraph (a)(4)(i)(B)(*2*)(*ii*) of this section), for each emission data engine.

(5)–(6) [Reserved]

(7) Every test engine of an engine family must comply with all applicable standards (or family emission limits, as appropriate), as determined in paragraph (c)(4)(iv) of this section, before any engine in that family will be certified.

(d)(1) Paragraph (d) of this section applies to heavy-duty vehicles equipped with gasoline-fueled or methanol-fueled engines.

(2) The applicable evaporative emission standard in § 86.091–10 or § 86.094–11 applies to the emissions of vehicles for their useful life.

(3)(i) For vehicles with a GVWR of up to 26,000 pounds, because it is expected that emission control efficiency will change during the useful life of the vehicle, an evaporative emission deterioration factor shall be determined from the testing described in § 86.088–23(b)(3) for each evaporative emission family-evaporative emission control system combination to indicate the evaporative emission control system deterioration during the useful life of the vehicle (minimum 50,000 miles). The factor shall be established to a minimum of two places to the right of the decimal.

(ii) For vehicles with a GVWR of greater than 26,000 pounds, because it is expected that emission control efficiency will change during the useful life of the vehicle, each manufacturer's statement as required in § 86.094–23(b)(4) (ii) shall include, in accordance with good engineering practice, consideration of control system deterioration.

(4) The evaporative emission test results, if any, shall be adjusted by the addition of the appropriate deterioration factor, provided that if the deterioration factor as computed in paragraph (d)(3) of this section is less than zero, that deterioration factor shall be zero for the purposes of this paragraph.

(5) The emission level to compare with the standard shall be the adjusted emission level of paragraph (d)(4) of this section. Before any emission value is compared with the standard, it shall be rounded, in accordance with ASTM E 29–67 (reapproved 1980) (as referenced in paragraph (a)(4)(i)(B)(*2*)(*ii*) of this section), to two significant figures. The rounded emission values may not exceed the standard.

(6) Every test vehicle of an evaporative emission family must comply with the evaporative emission standard, as determined in paragraph (d)(5) of this section, before any vehicle in that family may be certified.

[58 FR 4025, Jan. 12, 1993]

EDITORIAL NOTE: At 65 FR 47325, Aug. 2, 2000, § 86.094–28 was amended in paragraph (a)(4)(i)(B)(*2*)(*ii*) by revising the phrase ''401 M Street SW'' to read ''401 M St., SW.''; however this exact phrase does not appear in this paragraph in the 2000 edition of this volume.

§ 86.094–30 Certification.

(a)(1)(i) If, after a review of the test reports and data submitted by the manufacturer, data derived from any inspection carried out under § 86.091–7(c) and any other pertinent data or information, the Administrator determines that a test vehicle(s) (or test engine(s)) meets the requirements of the Act and of this subpart, he will issue a certificate of conformity with respect

to such vehicle(s) (or engine(s)) except in cases covered by paragraphs (a) (1) (ii) and (c) of this section.

(ii) *Gasoline-fueled and methanol-fueled heavy-duty vehicles.* If, after a review of the statement(s) of compliance submitted by the manufacturer under § 86.094–23(b)(4) and any other pertinent data or information, the Administrator determines that the requirements of the Act and this subpart have been met, he will issue one certificate of conformity per manufacturer with respect to the evaporative emission family(ies) covered by paragraph (c) of this section.

(2) Such certificate will be issued for such period not to exceed one model year as the Administrator may determine and upon such terms as he may deem necessary or appropriate to assure that any new motor vehicle (or new motor vehicle engine) covered by the certificate will meet the requirements of the Act and of this part.

(3)(i) One such certificate will be issued for each engine family. For gasoline-fueled and methanol-fueled light-duty vehicles and light-duty trucks, one such certificate will be issued for each engine family evaporative emission family combination.

(A) *Light-duty vehicles.* Each certificate will certify compliance with no more than one set of in-use and certification standards (or family emission limits, as appropriate).

(B) *Light-duty trucks.* Each certificate will certify compliance with no more than one set of in-use and certification standards (or family emission limits, as appropriate), except where there are both low-altitude standards and high altitude standards applicable. The certificate shall state that it covers vehicles sold or delivered to an ultimate purchaser for principal use at a designated high-altitude location only if the vehicle conforms in all material respects to the design specifications that apply to those vehicles described in the application for certification at high altitude.

(ii) For gasoline-fueled and methanol-fueled heavy-duty vehicles, one such certificate will be issued for each manufacturer and will certify compliance for those vehicles previously identified in that manufacturer's statement(s) of compliance as required in § 86.094–23(b)(4) (i) and (ii).

(iii) For diesel-cycle light-duty vehicles and light-duty trucks, or diesel-cycle heavy-duty engines, included in the applicable particulate averaging program, the manufacturer may at any time during production elect to change the level of any family particulate emission limit by demonstrating compliance with the new limit as described in §§ 86.094–28(a)(6) and 86.094–28(b)(5)(i) . New certificates issued under this paragraph will be applicable only for vehicles (or engines) produced subsequent to the date of issuance.

(iv) For light-duty trucks or heavy-duty engines included in the applicable NO_X averaging program, the manufacturer may at any time during production elect to change the level of any family NO_X emission limit by demonstrating compliance with the new limit as described in § 86.094–28(b)(5)(ii). New certificates issued under this paragraph will be applicable only for vehicles (or engines) produced subsequent to the day of issue.

(4)(i) The adjustment or modification of any light-duty truck in accordance with instructions provided by the manufacturer for the altitude where the vehicle is principally used will not be considered a violation of section 203(a)(3) of the Clean Air Act (42 U.S.C. 7522 (a)(3)).

(ii) A violation of section 203(a)(1) of the Clean Air Act (42 U.S.C. 7522(a)(1)) occurs when a manufacturer sells or delivers to an ultimate purchaser any light-duty vehicle or light-duty truck, subject to the regulations under the Act, under any of the conditions specified in the remainder of this paragraph.

(A) When a light-duty vehicle or light-duty truck is not configured to meet high-altitude requirements:

(*1*) At a designated high-altitude location, unless such manufacturer has reason to believe that such vehicle will not be sold to an ultimate purchaser for principal use at a designated high-altitude location; or

(*2*) At a location other than a designated high-altitude location, when such manufacturer has reason to believe that such motor vehicle will be

sold to an ultimate purchaser for principal use at a designated high-altitude location.

(B) When a light-duty vehicle is not configured to meet low-altitude requirements, as provided in § 86.094–8(i) :

(*1*) At a designated low-altitude location, unless such manufacturer has reason to believe that such vehicle will not be sold to an ultimate purchaser for principal use at a designated low-altitude location; or

(*2*) At a location other than a designated low-altitude location, when such manufacturer has reason to believe that such motor vehicle will be sold to an ultimate purchaser for principal use at a designated low-altitude location.

(iii) A manufacturer shall be deemed to have reason to believe that a light-duty vehicle that has been exempted from compliance with emission standards at high-altitude, or a light-duty truck which is not configured to meet high-altitude requirements, will not be sold to an ultimate purchaser for principal use at a designated high-altitude location if the manufacturer has informed its dealers and field representatives about the terms of these high-altitude regulations, has not caused the improper sale itself, and has taken reasonable action which shall include, but not be limited to, either paragraph (a)(4)(iii) (A) or (B), and paragraph (a)(4)(iii)(C) of this section:

(A) Requiring dealers in designated high-altitude locations to submit written statements to the manufacturer signed by the ultimate purchaser that a vehicle which is not configured to meet high-altitude requirements will not be used principally at a designated high-altitude location; requiring dealers in counties contiguous to designated high-altitude locations to submit written statements to the manufacturer, signed by the ultimate purchaser who represents to the dealer in the normal course of business that he or she resides in a designated high-altitude location, that a vehicle which is not configured to meet high-altitude requirements will not be used principally at a designated high-altitude location; and for each sale or delivery of fleets of ten or more such vehicles in a high-altitude location or in counties contiguous to high-altitude locations, requiring either the selling dealer or the delivering dealer to submit written statements to the manufacturer, signed by the ultimate purchaser who represents to the dealer in the normal course of business that he or she resides in a designated high-altitude location, that a vehicle which is not configured to meet high-altitude requirements will not be used principally at a designated high-altitude location. In addition, the manufacturer will make available to EPA, upon reasonable written request (but not more frequently than quarterly, unless EPA has demonstrated that it has substantial reason to believe that an improperly configured vehicle has been sold), sales, warranty, or other information pertaining to sales of vehicles by the dealers described above maintained by the manufacturer in the normal course of business relating to the altitude configuration of vehicles and the locations of ultimate purchasers; or

(B) Implementing a system which monitors factory orders of low-altitude vehicles by high-altitude dealers, or through other means, identifies dealers that may have sold or delivered a vehicle not configured to meet the high-altitude requirements to an ultimate purchaser for principal use at a designated high-altitude location; and making such information available to EPA upon reasonable written request (but not more frequently than quarterly, unless EPA has demonstrated that it has substantial reason to believe that an improperly configured vehicle has been sold); and

(C) Within a reasonable time after receiving written notice from EPA or a State or local government agency that a dealer may have improperly sold or delivered a vehicle not configured to meet the high-altitude requirements to an ultimate purchaser residing in a designated high-altitude location, or based on information obtained pursuant to paragraph (a)(4)(iii) of this section that a dealer may have improperly sold or delivered a significant number of such vehicles to ultimate purchasers so residing, reminding the dealer in writing of the requirements of these regulations, and, where appropriate, warning the dealer that sale by the

dealer of vehicles not configured to meet high-altitude requirements may be contrary to the terms of its franchise agreement with the manufacturer and the dealer certification requirements of § 85.2108 of this chapter.

(iv) A manufacturer shall be deemed to have reason to believe that a light-duty vehicle which has been exempted from compliance with emission standards at low-altitude, as provided in § 86.094–8(i), will not be sold to an ultimate purchaser for principal use at a designated low-altitude location if the manufacturer has informed its dealers and field representatives about the terms of the high-altitude regulations, has not caused the improper sale itself, and has taken reasonable action which shall include, but not be limited to, either paragraph (a)(4)(iv) (A) or (B), and (a)(4)(iv)(C) of this section:

(A) Requiring dealers in designated low-altitude locations to submit written statements to the manufacturer signed by the ultimate purchaser that a vehicle which is not configured to meet low-altitude requirements will not be used principally at a designated low-altitude location; requiring dealers in counties contiguous to designated low-altitude locations to submit written statements to the manufacturer, signed by the ultimate purchaser who represents to the dealer in the normal course of business that he or she resides in a designated low-altitude location, that a vehicle which is not configured to meet low-altitude requirements will not be used principally at a designated low-altitude location; and for each sale or delivery of fleets of ten or more such vehicles in a low-altitude location or in counties contiguous to low-altitude locations, requiring either the selling dealer or the delivering dealer to submit written statements to the manufacturer, signed by the ultimate purchaser who represents to the dealer in the normal course of business that he or she resides in a designated low-altitude location, that a vehicle which is not configured to meet low-altitude requirements will not be used principally at a designated high-altitude location. In addition, the manufacturer will make available to EPA, upon reasonable written request (but not more frequently than quarterly, unless EPA has demonstrated that it has substantial reason to believe that an improperly configured vehicle has been sold), sales, warranty, or other information pertaining to sales of vehicles by the dealers described above maintained by the manufacturer in the normal course of business relating to the altitude configuration of vehicles and the locations of ultimate purchasers; or

(B) Implementing a system which monitors factory orders of high-altitude vehicles by low-altitude dealers, or through other means, identifies dealers that may have sold or delivered a vehicle not configured to meet the low-altitude requirements to an ultimate purchaser for principal use at a designated low-altitude location; and making such information available to EPA upon reasonable written request (but not more frequently than quarterly, unless EPA has demonstrated that it has substantial reason to believe that an improperly configured vehicle has been sold); and

(C) Within a reasonable time after receiving written notice from EPA or a state or local government agency that a dealer may have improperly sold or delivered a vehicle not configured to meet the low-altitude requirements to an ultimate purchaser residing in a designated low-altitude location, or based on information obtained pursuant to paragraph (a)(4)(iv) of this section that a dealer may have improperly sold or delivered a significant number of such vehicles to ultimate purchasers so residing, reminding the dealer in writing of the requirements of these regulations, and, where appropriate, warning the dealer that sale by the dealer of vehicles not configured to meet low-altitude requirements may be contrary to the terms of its franchise agreement with the manufacturer and the dealer certification requirements of § 85.2108 of this chapter.

(5)(i) For the purpose of paragraph (a) of this section, a ''designated high-altitude location'' is any county which has substantially all of its area located above 1,219 meters (4,000 feet) and:

(A) Requested and extension past the attainment date of December 31, 1982, for compliance with either the National Ambient Air Quality Standards

for carbon monoxide or ozone, as indicated in part 52 (Approval and Promulgation of Implementation Plans) of this title; or

(B) Is in the same state as a county designated as a high-altitude location according to paragraph (a)(5)(i)(A) of this section.

(ii) The designated high-altitude locations defined in paragraph (a)(5)(i) of this section are listed below:

STATE OF COLORADO

Adams	Kit Carson
Alamosa	Lake
Arapahoe	La Plata
Archuleta	Larimer
Boulder	Las Animas
Chaffee	Lincoln
Cheyenne	Mesa
Clear Creek	Mineral
Conejos	Moffat
Costilla	Montezuma
Crowley	Montrose
Custer	Morgan
Delta	Otero
Denver	Ouray
Dolores	Park
Douglas	Pitkin
Eagle	Pueblo
Elbert	Rio Blanco
El Paso	Rio Grande
Fremont	Routt
Garfield	Saguache
Gilpin	San Juan
Grand	San Miguel
Gunnison	Summit
Hinsdale	Teller
Huerfano	Washington
Jackson	Weld
Jefferson	

STATE OF NEVADA

Carson City	Lyon
Douglas	Mineral
Elko	Nye
Esmeralda	Pershing
Eureka	Storey
Humboldt	Washoe
Lander	White Pine
Lincoln	

STATE OF NEW MEXICO

Bernalillo	Luna
Catron	McKinley
Colfax	Mora
Curry	Otero
De Baca	Rio Arriba
Grant	Roosevelt
Guadalupe	Sandoval
Harding	San Juan
Hidalgo	San Miguel
Lincoln	Santa Fe
Los Alamos	Sierra
Socorro	Union
Taos	Valencia
Torrance	

STATE OF UTAH

Beaver	Morgan
Box Elder	Piute
Cache	Rich
Carbon	Salt Lake
Daggett	San Juan
Davis	Sanpete
Duchesne	Sevier
Emery	Summit
Garfield	Tooele
Grand	Uintah
Iron	Utah
Juab	Wasatch
Kane	Wayne
Millard	Weber

(iii) For the purpose of paragraph (a) of this section, a ''designated low-altitude location'' is any county which has substantially all of its area located below 1,219 meters (4,000 feet).

(iv) The designated low-altitude locations so defined include all counties in the United States which are not listed in either paragraph (a)(5)(ii) of this section or in the list below:

STATE OF ARIZONA

Apache	Navajo
Cochise	Yavapai
Coconino	

STATE OF IDAHO

Bannock	Franklin
Bear Lake	Fremont
Bingham	Jefferson
Blaine	Lemhi
Bonneville	Madison
Butte	Minidoka
Camas	Oneida
Caribou	Power
Cassia	Treton
Clark	Valley
Custer	

STATE OF MONTANA

Beaverhead	Meagher
Deer Lodge	Park
Gallatin	Powell
Jefferson	Silver Bow
Judith Basin	Wheatland
Madison	

STATE OF NEBRASKA

Banner	Kimball
Cheyenne	Sioux

STATE OF OREGON

Harney	Lake
Klamath	

STATE OF TEXAS

Jeff Davis	Parmer
Hudspeth	

STATE OF WYOMING

Albany	Natrona
Campbell	Niobrara
Carbon	Park
Converse	Platte
Fremont	Sublette
Goshen	Sweetwater
Hot Springs	Teton
Johnson	Uinta
Laramie	Washakie
Lincoln	Weston

(6) Catalyst-equipped vehicles, otherwise covered by a certificate, which are driven outside the United States, Canada, and Mexico will be presumed to have been operated on leaded gasoline resulting in deactivation of the catalysts. If these vehicles are imported or offered for importation without retrofit of the catalyst, they will be considered not to be within the coverage of the certificate unless included in a catalyst control program operated by a manufacturer or a United States Government agency and approved by the Administrator.

(7) For incomplete light-duty trucks, a certificate covers only those new motor vehicles which, when completed by having the primary load-carrying device or container attached, conform to the maximum curb weight and frontal area limitations described in the application for certification as required in § 86.094–21(d).

(8) For heavy-duty engines, a certificate covers only those new motor vehicle engines installed in heavy-duty vehicles which conform to the minimum gross vehicle weight rating, curb weight, or frontal area limitations for heavyduty vehicles described in § 86.082–2.

(9) For incomplete gasoline-fueled and methanol-fueled heavy-duty vehicles a certificate covers only those new motor vehicles which, when completed, conform to the nominal maximum fuel tank capacity limitations as described in the application for certification as required in § 86.094–21(e).

(10)(i) For diesel-cycle light-duty vehicle and diesel-cycle light-duty truck families which are included in a particulate averaging program, the manufacturer's production-weighted average of the particulate emission limits of all engine families in a participating class or classes shall not exceed the applicable diesel-cycle particulate standard, or the composite particulate standard defined in § 86.090–2 as appropriate, at the end of the model year, as determined in accordance with this part. The certificate shall be void ab initio for those vehicles causing the production-weighted FEL to exceed the particulate standard.

(ii) For all heavy-duty diesel-cycle engines which are included in the particulate averaging, trading, or banking programs under § 86.094–15, the provisions of paragraphs (a)(10)(ii) (A) through (C) of this section apply.

(A) All certificates issued are conditional upon the manufacturer complying with the provisions of § 86.094–15 and the averaging, trading, and banking related provision of other applicable sections, both during and after the model year production.

(B) Failure to comply with all provisions of § 86.094–15 will be considered to be a failure to satisfy the conditions upon which the certificate was issued, and the certificate may be deemed void ab initio.

(C) The manufacturer shall bear the burden of establishing to the satisfaction of the Administrator that the conditions upon which the certificate was issued were satisfied or excused.

(11)(i) For light-duty truck families which are included in a NO_X averaging program, the manufacturer's production-weighted average of the NO_X emission limits of all such engine families shall not exceed the applicable NO_X emission standard, or the composite NO_X emission standard defined in § 86.088–2, as appropriate, at the end of the model year, as determined in accordance with this part. The certificate shall be void ab initio for those vehicles causing the production-weighted FEL to exceed the NO_X standard.

(ii) For all heavy duty engines which are included in the NO_X averaging, trading, or banking programs under § 86.091–15, the provisions of paragraphs (a)(11)(ii) (A) through (C) of this section apply.

(A) All certificates issued are conditional upon the manufacturer complying with the provisions of § 86.094–15

and the averaging, trading, and banking related provision of other applicable sections, both during and after the model year production.

(B) Failure to comply with all provisions of § 86.094–15 will be considered to be a failure to satisfy the conditions upon which the certificate was issued, and the certificate may be deemed void ab initio.

(C) The manufacturer shall bear the burden of establishing to the satisfaction of the Administrator that the ''conditions upon which the certificate was issued were satisfied or excused.

(12) For all light-duty vehicles certified to standards under § 86.094–8 or to which standards under § 86.708–94 are applicable, the provisions of paragraphs (a)(12) (i) through (iii) of this section apply.

(i) All certificates issued are conditional upon the manufacturer complying with all provisions of §§ 86.094–8 and 86.708–94 both during and after model year production.

(ii) Failure to meet the required implementation schedule sales percentages as specified in §§ 86.094–8 and § 86.708–94 will be considered to be a failure to satisfy the conditions upon which the certificate(s) was issued and the vehicles sold in violation of the implementation schedule shall not be covered by the certificate.

(iii) The manufacturer shall bear the burden of establishing to the satisfaction of the Administrator that the conditions upon which the certificate was issued were satisfied.

(13) For all light-duty trucks certified to standards under § 86.094–9 and to which standards under § 86.709–94 are applicable, the provisions of paragraphs (a)(13) (i) through (iii) this section apply.

(i) All certificates issued are conditional upon the manufacturer complying with all provisions of §§ 86.094–9 and 86.709–94 both during and after model year production.

(ii) Failure to meet the required implementation schedule sales percentages as specified in §§ 86.094–9 and 86.709–94 will be considered to be a failure to satisfy the conditions upon which the certificate(s) was issued and the individual vehicles sold in violation of the implementation schedule shall not be covered by the certificate.

(iii) The manufacturer shall bear the burden of establishing to the satisfaction of the Administrator that the conditions upon which the certificate was issued were satisfied.

(14) For all light-duty vehicles and light-duty trucks certified with an Alternative Service Accumulation Durability Program under § 86.094–13(e), paragraphs (a)(14) (i) through (iii) of this section apply.

(i) All certificates issued are conditional upon the manufacturer performing the in-use verification program pursuant to the agreement described in § 86.094–13(e)(8).

(ii) Failure to fully comply with all the terms of the in-use verification program pursuant to the agreement described in § 86.094–13(e)(8) will be considered a failure to satisfy the conditions upon which the certificate was issued. A vehicle or truck will be considered to be covered by the certificate only if the manufacturer fulfills the conditions upon which the certificate is issued.

(iii) The manufacturer shall bear the burden of establishing to the satisfaction of the Administrator that the conditions upon which the certificate was issued were satisfied.

(b)(1) The Administrator will determine whether a vehicle (or engine) covered by the application complies with applicable standards (or family emission limits, as appropriate) by observing the following relationships: in paragraphs (b)(1) (i) through (iv) of this section:

(i) *Light-duty vehicles.* (A) The durability data vehicle(s) selected under § 86.094–24(c)(1)(i) shall represent all vehicles of the same engine system combination.

(B) The emission data vehicle(s) selected under § 86.094–24(b)(1) (ii) through (iv) shall represent all vehicles of the same engine-system combination as applicable.

(C) The emission data vehicle(s) selected under § 86.094–24(b)(1)(vii) (A) and (B) shall represent all vehicles of the same evaporative control system within the evaporative family.

(ii) *Light-duty trucks.* (A) The emission data vehicle(s) selected under § 86.094–24(b)(1)(ii), shall represent all

vehicles of the same engine-system combination as applicable.

(B) The emission data vehicle(s) selected under § 86.094–24 (b)(I)(vii) (A) and (B) shall represent all vehicles of the same evaporative control system within the evaporative family.

(C) The emission data vehicle(s) selected under § 86 .09424(b) (1) (v) shall represent all vehicles of the same enginesystem combination as applicable.

(D) The emission data vehicle(s) selected under § 86.094–24(b)(1)(viii) shall represent all vehicles of the same evaporative control system within the evaporative emission family, as applicable.

(iii) *Heavy-duty engines.* (A) An Otto-cycle emission data test engine selected under § 86.094–24(b)(2)(iv) shall represent all engines in the same family of the same engine displacement-exhaust emission control system combination.

(B) An Otto-cycle emission data test engine selected under § 86.094–24(b)(2)(iii) shall represent all engines in the same engine family of the same engine displacement-exhaust emission control system combination.

(C) A diesel emission data test engine selected under § 86.094–24(b)(3)(ii) shall represent all engines in the same engine-system combination.

(D) A diesel emission data test engine selected under § 86.094–24(b)(3)(iii) shall represent all engines of that emission control system at the rated fuel delivery of the test engine.

(iv) Gasoline-fueled and methanol-fueled heavy-duty vehicles. A statement of compliance submitted under § 86.094–23(b)(4) (i) or (ii) shall represent all vehicles in the same evaporative emission family-evaporative emission control system combination.

(2) The Administrator will proceed as in paragraph (a) of this section with respect to the vehicles (or engines) belonging to an engine family or engine family-evaporative emission family combination (as applicable), all of which comply with all applicable standards (or family emission limits, as appropriate).

(3) If after a review of the test reports and data submitted by the manufacturer, data derived from any additional testing conducted pursuant to § 86.091–29, data or information derived from any inspection carried out under § 86.094–7(d) or any other pertinent data or information, the Administrator determines that one or more test vehicles (or test engines) of the certification test fleet do not meet applicable standards (or family emission limits, as appropriate), he will notify the manufacturer in writing, setting forth the basis for his determination. Within 30 days following receipt of the notification, the manufacturer may request a hearing on the Administrator's determination. The request shall be in writing, signed by an authorized representative of the manufacturer and shall include a statement specifying the manufacturer's objections to the Administrator's determination and data in support of such objections. If, after a review of the request and supporting data, the Administrator finds that the request raises a substantial factual issue, he shall provide the manufacturer a hearing in accordance with § 86.078–6 with respect to such issue.

(4) For light-duty vehicles and light-duty trucks the manufacturer may, at its option, proceed with any of the following alternatives with respect to an emission data vehicle determined not in compliance with all applicable standards (or family emission limits, as appropriate) for which it was tested:

(i) Request a hearing under § 86.078–6; or

(ii) Remove the vehicle configuration (or evaporative vehicle configuration, as applicable) which failed, from his application:

(A) If the failed vehicle was tested for compliance with exhaust emission standards (or family emission limits, as appropriate) only: The Administrator may select, in place of the failed vehicle, in accordance with the selection criteria employed in selecting the failed vehicle, a new emission data vehicle to be tested for exhaust emission compliance only; or

(B) If the failed vehicle was tested for compliance with both exhaust and evaporative emission standards: The Administrator may select, in place of the failed vehicle, in accordance with

the selection criteria employed in selecting the failed vehicle, a new emission data vehicle which will be tested for compliance with both exhaust and evaporative emission standards. If one vehicle cannot be selected in accordance with the selection criteria employed in selecting the failed vehicle, then two vehicles may be selected (i.e., one vehicle to satisfy the exhaust emission vehicle selection criteria and one vehicle to satisfy the evaporative emission vehicle selection criteria). The vehicle selected to satisfy the exhaust emission vehicle selection criteria will be tested for compliance with exhaust emission standards (or family emission limits, as appropriate) only. The vehicle selected to satisfy the evaporative emission vehicle selection criteria will be tested for compliance with both exhaust and evaporative emission standards; or

(iii) Remove the vehicle configuration (or evaporative vehicle configuration, as applicable) which failed from the application and add a vehicle configuration(s) (or evaporative vehicle configuration(s), as applicable) not previously listed. The Administrator may require, if applicable, that the failed vehicle be modified to the new engine code (or evaporative emission code, as applicable) and demonstrate by testing that it meets applicable standards (or family emission limits, as appropriate) for which it was originally tested. In addition, the Administrator may select, in accordance with the vehicle selection criteria given in § 86.094–24(b), a new emission data vehicle or vehicles. The vehicles selected to satisfy the exhaust emission vehicle selection criteria will be tested for compliance with exhaust emission standards (or family emission limits, as appropriate) only. The vehicles selected to satisfy the evaporative emission vehicle selection criteria will be tested for compliance with both exhaust and evaporative emission standards (or family emission limits, as appropriate); or

(iv) Correct a component or system malfunction and show that with a correctly functioning system or component the failed vehicle meets applicable standards (or family emission limits, as appropriate) for which it was originally tested. The Administrator may require a new emission data vehicle, of identical vehicle configuration (or evaporative vehicle configuration, as applicable) to the failed vehicle, to be operated and tested for compliance with the applicable standards (or family emission limits, as appropriate) for which the failed vehicle was originally tested.

(5) For heavy-duty engines the manufacturer may, at his option, proceed with any of the following alternatives with respect to any engine family represented by a test engine (s) determined not in compliance with applicable standards (or family emission limit, as appropriate):

(i) Request a hearing under § 86.078–6; or

(ii) Delete from the application for certification the engines represented by the failing test engine. (Engines so deleted may be included in a later request for certification under § 86.079–32.) The Administrator may then select in place of each failing engine an alternate engine chosen in accordance with selection criteria employed in selecting the engine that failed; or

(iii) Modify the test engine and demonstrate by testing that it meets applicable standards. Another engine which is in all material respect the same as the first engine, as modified, may then be operated and tested in accordance with applicable test procedures.

(6) If the manufacturer does not request a hearing or present the required data under paragraphs (b) (4) or (5) of this section (as applicable) of this section, the Administrator will deny certification.

(c)(1) Notwithstanding the fact that any certification vehicle(s) (or certification engine(s)) may comply with other provisions of this subpart, the Administrator may withhold or deny the issuance of a certificate of conformity (or suspend or revoke any such certificate which has been issued) with respect to any such vehicle(s) (or engine(s)) if:

(i) The manufacturer submits false or incomplete information in his application for certification thereof;

(ii) The manufacturer renders inaccurate any test data which he submits pertaining thereto or otherwise circumvents the intent of the Act, or of

this part with respect to such vehicle (or engine);

(iii) Any EPA Enforcement Officer is denied access on the terms specified in § 86.091–7(d) to any facility or portion thereof which contains any of the following:

(A) The vehicle (or engine);

(B) Any components used or considered for use in its modification or buildup into a certification vehicle (or certification engine);

(C) Any production vehicle (or production engine) which is or will be claimed by the manufacturer to be covered by the certificate;

(D) Any step in the construction of a vehicle (or engine) described in paragraph (c)(iii)(C) of this section;

(E) Any records, documents, reports, or histories required by this part to be kept concerning any of the above; or

(iv) Any EPA Enforcement Officer is denied ''reasonable assistance'' (as defined in § 86.091–7(d) in examining any of the items listed in paragraph (c)(1)(iii) of this section.

(2) The sanctions of withholding, denying, revoking, or suspending of a certificate may be imposed for the reasons in paragraphs (c)(1) (i), (ii), (iii), or (iv) of this section only when the infraction is substantial.

(3) In any case in which a manufacturer knowingly submits false or inaccurate information or knowingly renders inaccurate or invalid any test data or commits any other fraudulent acts and such acts contribute substantially to the Administrator's decision to issue a certificate of conformity, the Administrator may deem such certificate void ab initio.

(4) In any case in which certification of a vehicle (or engine) is proposed to be withheld, denied, revoked, or suspended under paragraph (c)(1) (iii) or (iv) of this section, and in which the Administrator has presented to the manufacturer involved reasonable evidence that a violation of § 86.091–7(d) in fact occurred, the manufacturer, if he wishes to contend that, even though the violation occurred, the vehicle (or engine) in question was not involved in the violation to a degree that would warrant withholding, denial, revocation, or suspension of certification under either paragraph (c)(1) (iii) or (iv) of this section, shall have the burden of establishing that contention to the satisfaction of the Administrator.

(5) Any revocation or suspension of certification under paragraph (c)(1) of this section shall:

(i) Be made only after the manufacturer concerned has been offered an opportunity for a hearing conducted in accordance with § 86.078–6 hereof; and

(ii) Extend no further than to forbid the introduction into commerce of vehicles (or engines) previously covered by the certification which are still in the hands of the manufacturer, except in cases of such fraud or other misconduct as makes the certification invalid *ab initio*.

(6) The manufacturer may request in the form and manner specified in paragraph (b)(3) of this section that any determination made by the Administrator under paragraph (c)(1) of this section to withhold or deny certification be reviewed in a hearing conducted in accordance with § 86.078–6. If the Administrator finds, after a review of the request and supporting data, that the request raises a substantial factual issue, he will grant the request with respect to such issue.

(d)(1) For light-duty vehicles. Notwithstanding the fact that any vehicle configuration or engine family may be covered by a valid outstanding certificate of conformity, the Administrator may suspend such outstanding certificate of conformity in whole or in part with respect to such vehicle configuration or engine family if:

(i) The manufacturer refuses to comply with the provisions of a test order issued by the Administrator pursuant to § 86.603; or

(ii) The manufacturer refuses to comply with any of the requirements of § 86.603; or

(iii) The manufacturer submits false or incomplete information in any report or information provided pursuant to the requirements of § 86.609; or

(iv) The manufacturer renders inaccurate any test data which he submits pursuant to § 86.609; or

(v) Any EPA Enforcement Officer is denied the opportunity to conduct activities related to entry and access as authorized in § 86.606 of this part and in a warrant or court order presented to

the manufacturer or the party in charge of a facility in question; or

(vi) EPA Enforcement Officers are unable to conduct activities related to entry and access or to obtain ''reasonable assistance'' as authorized in § 86.606 of this part because a manufacturer has located its facility in a foreign jurisdiction where local law prohibits those activities; or

(vii) The manufacturer refuses to or in fact does not comply with § 86.604(a), § 86.605, § 86.607, § 86.608, or § 86.610.

(2) The sanction of suspending a certificate may not be imposed for the reasons in paragraph (d)(1) (i), (ii), or (vii) of this section where the refusal is caused by conditions and circumstances outside the control of the manufacturer which render it impossible to comply with those requirements.

(3) The sanction of suspending a certificate may be imposed for the reasons in paragraph (d)(1) (iii), (iv), or (v) of this section only when the infraction is substantial.

(4) In any case in which a manufacturer knowingly submitted false or inaccurate information or knowingly rendered inaccurate any test data or committed any other fraudulent acts, and such acts contributed substantially to the Administrator's original decision not to suspend or revoke a certificate of conformity in whole or in part, the Administrator may deem such certificate void from the date of such fraudulent act.

(5) In any case in which certification of a vehicle is proposed to be suspended under paragraph (d)(1)(v) of this section and in which the Administrator has presented to the manufacturer involved reasonable evidence that a violation of § 86.606 in fact occurred, if the manufacturer wishes to contend that, although the violation occurred, the vehicle configuration or engine family in question was not involved in the violation to a degree that would warrant suspension of certification under paragraph (d)(1)(v) of this section, the manufacturer shall have the burden of establishing the contention to the satisfaction of the Administrator.

(6) Any suspension of certification under paragraph (d)(1) of this section shall:

(i) Be made only after the manufacturer concerned has been offered an opportunity for a hearing conducted in accordance with § 86.614; and

(ii) Not apply to vehicles no longer in the hands of the manufacturer.

(7) Any voiding of a certificate of conformity under paragraph (d)(4) of this section will be made only after the manufacturer concerned has been offered an opportunity for a hearing conducted in accordance with § 86.614.

(8) Any voiding of the certificate under § 86.091–30(a)(10) will be made only after the manufacturer concerned has been offered an opportunity for a hearing conducted in accordance with § 86.614.

(e) *For light-duty trucks and heavy-duty engines.* (1) Notwithstanding the fact that any vehicle configuration or engine family may be covered by a valid outstanding certificate of conformity, the Administrator may suspend such outstanding certificate of conformity in whole or in part with respect to such vehicle or engine configuration or engine family if:

(i) The manufacturer refuses to comply with the provisions of a test order issued by the Administrator pursuant to § 86.1003; or

(ii) The manufacturer refuses to comply with any of the requirements of § 86.1003; or

(iii) The manufacturer submits false or incomplete information in any report or information provided pursuant to the requirements of § 86.1009; or

(iv) The manufacturer renders inaccurate any test data submitted pursuant to § 86.1009; or

(v) Any EPA Enforcement Officer is denied the opportunity to conduct activities related to entry and access as authorized in § 86.1006 of this part and in a warrant or court order presented to the manufacturer or the party in charge of a facility in question; or

(vi) EPA Enforcement Officers are unable to conduct activities related to entry and access as authorized in § 86.1006 of this part because a manufacturer has located a facility in a foreign jurisdiction where local law prohibits those activities; or

(vii) The manufacturer refuses to or in fact does not comply with the requirements of §§ 86.1004(a), 86.1005,

86.1007, 86.1008, 86.1010, 86.1011, or 86.1013.

(2) The sanction of suspending a certificate may not be imposed for the reasons in paragraph (e)(1) (i), (ii), or (vii) of this section where such refusal or denial is caused by conditions and circumstances outside the control of the manufacturer which renders it impossible to comply with those requirements. Such conditions and circumstances shall include, but are not limited to, any uncontrollable factors which result in the temporary unavailability of equipment and personnel needed to conduct the required tests, such as equipment breakdown or failure or illness of personnel, but shall not include failure of the manufacturers to adequately plan for and provide the equipment and personnel needed to conduct the tests. The manufacturer will bear the burden of establishing the presence of the conditions and circumstances required by this paragraph.

(3) The sanction of suspending a certificate may be imposed for the reasons outlined in paragraph (e)(1) (iii), (iv), or (v) of this section only when the infraction is substantial.

(4) In any case in which a manufacturer knowingly submitted false or inaccurate information or knowingly rendered inaccurate any test data or committed any other fraudulent acts, and such acts contributed substantially to the Administrator's original decision not to suspend or revoke a certificate of conformity in whole or in part, the Administrator may deem such certificate void from the date of such fraudulent act.

(5) In any case in which certification of a light-duty truck or heavy-duty engine is proposed to be suspended under paragraph (e)(1)(v) of this section and in which the Administrator has presented to the manufacturer involved reasonable evidence that a violation of § 86.1006 in fact occurred, if the manufacturer wishes to contend that, although the violation occurred, the vehicle or engine configuration or engine family in question was not involved in the violation to a degree that would warrant suspension of certification under paragraph (e)(1)(v) of this section, he shall have the burden of establishing that contention to the satisfaction of the Administrator.

(6) Any suspension of certification under paragraph (e)(1) of this section shall:

(i) Be made only after the manufacturer concerned has been offered an opportunity for a hearing conducted in accordance with § 86.1014; and

(ii) Not apply to vehicles or engines no longer in the hands of the manufacturer.

(7) Any voiding of a certificate of conformity under paragraph (e)(4) of this section shall be made only after the manufacturer concerned has been offered an opportunity for a hearing conducted in accordance with § 86.1014.

(8) Any voiding of the certificate under paragraph (a) (10) or (11) of this section will be made only after the manufacturer concerned has been offered an opportunity for a hearing conducted in accordance with § 86.1014.

(f) For engine families required to have an emission control diagnostic system, certification will not be granted if, for any emission data vehicle or other test vehicle approved by the Administrator, the malfunction indicator light does not illuminate under any of the following circumstances, or if, for any assembly line vehicle, the malfunction indicator light does not illuminate under the circumstances described in paragraph (f)(4) of this section. Only paragraph (f)(4) of this section applies for diesel cycle vehicles.

(1) A catalyst is replaced with a deteriorated or defective catalyst or electronic simulation of such resulting in both an exhaust emission exceedance of 0.6 g/mi HC and an exhaust emission increase of 0.4 g/mi HC on a normal temperature (20 to 30 °C) emission certification test.

(2) A misfire condition is induced resulting in an increase in emissions of greater than 0.4 g/mi HC or 3.4 g/mi CO or 1.0 g/mi NO_X on a normal temperature (20 to 30 °C) emission certification test.

(3) Any oxygen sensor is replaced with a deteriorated or defective oxygen sensor, or the operation of such a sensor is simulated, resulting in an increase in emissions of 0.2 g/mi HC or 1.7 g/mi CO or 0.5 g/mi NO_X on a normal

temperature (20 to 30 °C) emission certification test.

(4) The electronic evaporative purge control device (if equipped) is disconnected or the operation of any emission-related powertrain component connected to a computer results in an increase in emissions of 0.2 g/mi HC or 1.7 g/mi CO or 0.5 g/mi NO_X on a normal temperature (20 to 30 °C) emission certification test.

[58 FR 4028, Jan. 12, 1993, as amended at 58 FR 9487, Feb. 19, 1993; 60 FR 15247, Mar. 23, 1995]

§ 86.094–35 Labeling.

Section 86.094–35 includes text that specifies requirements that differ from § 86.092–35. Where a paragraph in § 86.092–35 is identical and applicable to § 86.094–35, this may be indicated by specifying the corresponding paragraph and the statement ''[Reserved]. For guidance see § 86.092–35.'' Where a corresponding paragraph of § 86.092–35 is not applicable, this is indicated by the statement ''[Reserved].''

(a) The manufacturer of any motor vehicle (or motor vehicle engine) subject to the applicable emission standards (and family emission limits, as appropriate) of this subpart, shall, at the time of manufacture, affix a permanent legible label, of the type and in the manner described below, containing the information hereinafter provided, to all production models of such vehicles (or engines) available for sale to the public and covered by a Certificate of Conformity under § 86.091–30(a).

(1) *Light-duty vehicles.* (i) A permanent, legible label shall be affixed in a readily visible position in the engine compartment.

(ii) The label shall be affixed by the vehicle manufacturer who has been issued the certificate of conformity for such vehicle, in such manner that it cannot be removed without destroying or defacing the label. The label shall not be affixed to any equipment which is easily detached from such vehicle.

(iii) The label shall contain the following information lettered in the English language in block letters and numerals, which shall be of a color that contrasts with the background of the label:

(A) The label heading: Vehicle Emission Control Information;

(B) Full corporate name and trademark of manufacturer;

(C) Engine displacement (in cubic inches or liters), engine family identification, and evaporative family identification;

(D) Engine tune-up specifications and adjustments, as recommended by the manufacturer in accordance with the applicable emission standards (or family emission limits, as applicable), including but not limited to idle speed(s), ignition timing, the idle air-fuel mixture setting procedure and value (e.g., idle CO, idle air-fuel ratio, idle speed drop), high idle speed, initial injection timing and valve lash (as applicable), as well as other parameters deemed necessary by the manufacturer. These specifications should indicate the proper transmission position during tuneup and what accessories (e.g., air conditioner), if any, should be in operation;

(E) An unconditional statement of compliance with the appropriate model year U.S. Environmental Protection Agency regulations which apply to light-duty vehicles;

(F) The exhaust emission standards (or family emission limits, if applicable) to which the engine family is certified, and the corresponding exhaust emission standards (or family emission limits, if applicable) which the engine family must meet in-use;

(G) For vehicles that have been exempted from compliance with the emission standards at high altitude, as specified in § 86.090–8(h):

(*1*) A highlighted statement (e.g., underscored or boldface letters) that the vehicle is certified to applicable emission standards at low altitude only,

(*2*) A statement that the vehicle's unsatisfactory performance under high-altitude conditions makes it unsuitable for principal use at high altitude, and

(*3*) A statement that the emission performance warranty provisions of 40 CFR part 85, subpart V do not apply when the vehicle is tested at high altitude;

(H) For vehicles that have been exempted from compliance with the emission standards at low altitude, as specified in § 86.094–8(i):

(*1*) A highlighted statement (e.g., underscored or boldface letters) that the vehicle is certified to applicable emission standards at high altitude only, and

(*2*) A statement that the emission performance warranty provisions of 40 CFR part 85, subpart V do not apply when the vehicle is tested at low altitude;

(I) The vacuum hose routing diagram applicable to the vehicles if the vehicles are equipped with vacuum actuated emission and emission-related components. The manufacturer may, at its option, use a separate label for the vacuum hose routing diagram provided that the vacuum hose diagram is placed in a visible and accessible position as provided in this section;

(J) Vehicles granted final admission under § 85.1505 of this chapter must comply with the labeling requirements contained in § 85.1510 of this chapter.

(K) If applicable, a statement that the vehicle is exempt from cold temperature carbon monoxide standards.

(L) Vehicles which have been certified under the provisions of § 86.094–8(j) must comply with the labeling requirements contained in § 86.1606.

(2) *Light-duty trucks and heavy-duty vehicles optionally certified in accordance with the light-duty truck provisions.* (i) A legible permanent label shall be affixed in a readily visible position in the engine compartment.

(ii) The label shall be affixed by the vehicle manufacturer who has been issued the certificate of conformity for such vehicle, in such a manner that it cannot be removed without destroying or defacing the label. The label shall not be affixed to any equipment which is easily detached from such vehicle.

(iii) The label shall contain the following information lettered in the English language in block letters and numerals, which shall be of a color that contrasts with the background of the label:

(A) The label heading: Important Vehicle Information;

(B) Full corporate name and trademark of manufacturer;

(C) Engine family displacement (in cubic inches), engine family identification, and evaporative family identification;

(D) Engine tune-up specifications and adjustments, as recommended by the manufacturer in accordance with the applicable emission standards (or family emission limits, as appropriate), including but not limited to idle speed(s), ignition timing, the idle air-fuel mixture setting procedure and value (e.g., idle CO, idle air-fuel ratio, idle speed drop), high idle speed, initial injection timing, and valve lash (as applicable), as well as other parameters deemed necessary by the manufacturer. These specifications should indicate the proper transmission position during tune-up and what accessories (e.g., air conditioner), if any, should be in operation. If adjustments or modifications to the vehicle are necessary to insure compliance with emission standards (or family emission limits, as appropriate) at either high or low altitude, the manufacturer shall either include the instructions for such adjustments on the label, or indicate on the label where instructions for such adjustments may be found. The label shall indicate whether the engine tune-up or adjustment specifications are applicable to high altitude, low altitude or both;

(E)(*1*) *Light-duty trucks.* The prominent statement, ''This vehicle conforms to U.S. EPA regulations applicable to 19XX Model Year New Light-Duty Trucks.''

(*2*) *Heavy-duty vehicles optionally certified in accordance with the light-duty truck provisions.* The prominent statement, ''This heavy-duty vehicle conforms to the U.S. EPA regulations applicable to 19XX Model Year Light-Duty Trucks under the special provision of 40 CFR 86.092–1(b).'';

(F) [Reserved]

(G) A statement, if applicable, that the adjustments or modifications indicated on the label are necessary to ensure emission control compliance at the altitude specified;

(H) A statement, if applicable, that the high-altitude vehicle was designated or modified for principal use at high altitude. This statement must be affixed by the manufacturer at the time of assembly or by any dealer who performs the high-altitude modification or adjustment prior to sale to an ultimate purchaser;

(I) For vehicles that have been exempted from compliance with the high-altitude emission standards, as specified in § 86.094–9(g)(2):

(*1*) A highlighted statement (e.g., underscored or boldface letters) that the vehicle is certified to applicable emission standards at low altitude only;

(*2*) A statement that the vehicle's unsatisfactory performance under high-altitude conditions makes it unsuitable for principal use at high altitude; and

(*3*) A statement that the emission performance warranty provisions of 40 CFR part 85, subpart V do not apply when the vehicle is tested at high altitude;

(J) The exhaust emission standards (or family emission limits, if applicable) to which the engine family is certified, and the corresponding exhaust emission standards (or family emission limits, if applicable) which the engine family must meet in-use;

(K) [Reserved]

(L) The vacuum hose routing diagram applicable to the vehicles if the vehicles are equipped with vacuum actuated emission and emission-related components. The manufacturer may, at its option, use a separate label for the vacuum hose routing diagram provided that the vacuum hose diagram is placed in a visible and accessible position as provided by this section.

(M) Vehicles granted final admission under § 85.1505 of this chapter must comply with the labeling requirements contained in § 85.1510 of this chapter.

(N) If applicable, a statement that the vehicle is exempt from cold temperature carbon monoxide standards.

(3) *Heavy-duty engines.* (i) A permanent legible label shall be affixed to the engine in a position in which it will be readily visible after installation in the vehicle.

(ii) The label shall be attached to an engine part necessary for normal engine operation and not normally requiring replacement during engine life.

(iii) The label shall contain the following information lettered in the English language in block letters and numerals which shall be of a color that contrasts with the background of the label:

(A) The label heading: Important Engine Information;

(B) Full corporate name and trademark of manufacturer;

(C) Engine displacement (in cubic inches or liters) and engine family and model designations;

(D) Date of engine manufacture (month and year). The manufacturer may, in lieu of including the date of manufacture on the engine label, maintain a record of the engine manufacture dates. The manufacturer shall provide the date of manufacture records to the Administrator upon request;

(E) Engine specifications and adjustments as recommended by the manufacturer. These specifications should indicate the proper transmission position during tune-up and what accessories (e.g., air conditioner), if any, should be in operation;

(F) For Otto-cycle engines the label should include the idle speed, ignition timing, and the idle air-fuel mixture setting procedure and value (e.g., idle CO, idle air-fuel ratio, idle speed drop), and valve lash;

(G) For diesel engines the label should include the advertised hp at rpm, fuel rate at advertised hp in mm^3/stroke, valve lash, initial injection timing, and idle speed;

(H) The prominent statement: ''This engine conforms to U.S. EPA regulations applicable to 19XX Model Year New Heavy-Duty Engines.''

(I) If the manufacturer is provided with an alternate useful life period under the provisions of § 86.094–21(f), the prominent statement: ''This engine has been certified to meet U.S. EPA standards for a useful-life period of XXX miles or XXX hours of operation, whichever occurs first. This engine's actual life may vary depending on its service application.'' The manufacturer may alter this statement only to express the assigned alternate useful life in terms other than miles or hours (e.g., years, or hours only);

(J) *For diesel engines.* The prominent statement: ''This engine has a primary intended service application as a XXX heavy-duty engine.'' (The primary intended service applications are light, medium, and heavy, as defined in § 86.090–2.)

(K) *For Otto-cycle engines.* One of the following statements, as applicable:

(*1*) For engines certified to the emission standards under § 86.091–10(a)(1)(i) or (iii), the statement: ''This engine is certified for use in all heavy-duty vehicles.''

(*2*) For gasoline-fueled engines certified under the provisions of § 86.091–10(a)(3)(i), the statement: ''This engine is certified for use in all heavy-duty vehicles under the special provision of 40 CFR 86.091–10(a)(3)(i).''

(*3*) For engines certified to the emission standards under § 86.091–10(a)(1)(ii) or (iv), the statement: ''This engine is certified for use only in heavy-duty vehicles with a gross vehicle weight rating above 14,000 lbs.''

(L) For diesel engines which are included in the diesel heavy-duty particulate averaging program, the family particulate emission limit to which the engine is certified.

(M) For any heavy-duty engines which are included in the heavy-duty NO_X averaging program, the family NO_X emission limit to which the engine is certified.

(N) Engines granted final admission under § 85.1505 of this chapter must comply with the labeling requirements contained in § 85.1510 of this chapter.

(O) For diesel engines which have been certified to comply with the urban bus particulate standard of 40 CFR 86.094–11(a)(1)(iv)(A), the statement ''This engine is certified for use in an urban bus as defined at 40 CFR 86.093–2.'' Unless waived by the Administrator on the basis of impracticality, for diesel engines not certified to comply with the urban bus particulate standard, the statement ''This engine is not certified for use in an urban bus as defined at 40 CFR 86.093–2. Sales of this engine for use in an urban bus is a violation of Federal law under the Clean Air Act.''

(iv) The label may be made up of one or more pieces: *Provided*, That all pieces are permanently attached to the same engine or vehicle part as applicable.

(4) *Gasoline-fueled and methanol-fueled heavy-duty vehicles*. (i) A permanent, legible label shall be affixed in a readily visible position in the engine compartment. If such vehicles do not have an engine compartment, the label required in this paragraph (a)(4) and paragraph (g)(1) of this section shall be affixed in a readily visible position on the operator's enclosure or on the engine.

(ii) The label shall be affixed by the vehicle manufacturer who has been issued the Certificate of Conformity for such vehicle, in such a manner that it cannot be removed without destroying or defacing the label. The label shall not be affixed to any equipment which is easily detached from such vehicle.

(iii) The label shall contain the following information lettered in the English language in block letters and numerals, which shall be of a color that contrasts with the background of the label:

(A) The label heading: Vehicle Emission Control Information;

(B) Full corporate name and trademark of manufacturer;

(C) Evaporative family identification;

(D) The maximum nominal fuel tank capacity (in gallons) for which the evaporative control system is certified; and

(E) One of the following, as appropriate:

(*1*) An unconditional statement of compliance with the appropriate model year U.S. Environmental Protection Agency regulations which apply to gasoline-fueled heavy-duty vehicles;

(*2*) An unconditional statement of compliance with the appropriate model year U.S. Environmental Protection Agency regulations which apply to methanol-fueled heavy-duty vehicles;

(F) Vehicles granted final admission under § 85.1505 of this chapter must comply with the labeling requirements contained in § 85.1510 of this chapter.

(b) The provisions of this section shall not prevent a manufacturer from also reciting on the label that such vehicle (or engine) conforms to any applicable state emission standards for new motor vehicles (or new motor vehicle engines) or any other information that such manufacturer deems necessary for, or useful to, the proper operation and satisfactory maintenance of the vehicle (or engine).

(c)(1) The manufacturer of any light-duty vehicle or light-duty truck subject to the emission standards (or family emission limits, as appropriate) of

this subpart shall, in addition and subsequent to setting forth those statements on the label required by the Department of Transportation (DOT) pursuant to 49 CFR 567.4, set forth on the DOT label or an additional label located in proximity to the DOT label and affixed as described in 49 CFR 567.4(b), the following information in the English language, lettered in block letters and numerals not less than three thirty-seconds of an inch high, of a color that contrasts with the background of the label:

(i) The heading: ''Vehicle Emission Control Information.''

(ii)(A) *For light-duty vehicles*, The statement: ''This Vehicle Conforms to U.S. EPA Regulations Applicable to 19XX Model Year New Motor Vehicles.''

(B) *For light-duty trucks*, (*1*) The statement: ''This vehicle conforms to U.S. EPA regulations applicable to 19XX Model Year New Light-Duty Trucks.''

(*2*) [Reserved]

(iii) One of the following statements, as applicable, in letters and numerals not less than six thirty-seconds of an inch high and of a color that contrasts with the background of the label:

(A) For all vehicles certified as non-catalyst-equipped: ''NON-CATALYST'';

(B) For all vehicles certified as catalyst-equipped which are included in a manufacturer's catalyst control program for which approval has been given by the Administrator: ''CATALYST—APPROVED FOR IMPORT'';

(C) For all vehicles certified as catalyst-equipped which are not included in a manufacturer's catalyst control program for which prior approval has been given by the Administrator: ''CATALYST''.

(2) In lieu of selecting either of the labeling options of paragraph (c)(1) of this section, the manufacturer may add the information required by paragraph (c)(1)(iii) of this section to the label required by paragraph (a) of this section. The required information will be set forth in the manner prescribed by paragraph (c)(1)(iii) of this section.

(d) Incomplete light-duty trucks or incomplete heavy-duty vehicles optionally certified in accordance with the light-duty truck provisions shall have one of the following prominent statements, as applicable, printed on the label required by paragraph (a)(2) of this section in lieu of the statement required by paragraph (a)(2)(iii)(E) of this section.

(1) *Light-duty trucks*. The statement, ''This vehicle conforms to U.S. EPA regulations applicable to 19XX Model Year New Light-Duty Trucks when it does not exceed XX pounds in curb weight, XX pounds in gross vehicle weight rating, and XX square feet in frontal area.''

(2) *Heavy-duty vehicles optionally certified in accordance with the light-duty truck provisions*. ''This heavy-duty vehicle conforms to the U.S. EPA regulations applicable to 19XX Model Year Light-Duty Trucks under the special provision of 40 CFR 86.085–1(b) when it does not exceed XXX pounds in curb weight, XXX pounds in gross vehicle weight rating, and XXX square feet in frontal area.''

(e) Incomplete heavy-duty vehicles having a gross vehicle weight rating of 8,500 pounds or less shall have one of the following statements printed on the label required by paragraph (a)(3) of this section in lieu of the statement required by paragraph (a)(3)(iii)(H) of this section: ''This engine conforms to U.S. EPA regulations applicable to 19XX Model Year Heavy-Duty Engines when installed in a vehicle completed at a curb weight of more than 6,000 pounds or with a frontal area of greater than 45 square feet.''

(f) The manufacturer of any incomplete light-duty vehicle or light-duty truck shall notify the purchaser of such vehicle of any curb weight, frontal area, or gross vehicle weight rating limitations affecting the emission certificate applicable to that vehicle. This notification shall be transmitted in a manner consistent with National Highway Traffic Safety Administration safety notification requirements published in 49 CFR part 568.

(g) *Incomplete vehicle fuel tank capacity*. (1)(i) Incomplete gasoline-fueled heavy-duty vehicles shall have the following prominent statement printed on the label required in paragraph (a)(4) of this section: ''(Manufacturer's corporate name) has determined that this vehicle conforms to U.S. EPA regulations applicable to 19XX Model Year

New Gasoline-Fueled Heavy-Duty Vehicles when completed with a nominal fuel tank capacity not to exceed XXX gallons. Persons wishing to add fuel tank capacity beyond the above maximum must submit a written statement to the Administrator that the hydrocarbon storage system has been upgraded according to the requirements of 40 CFR 86.092–35(g)(2).''

(ii) Incomplete methanol-fueled heavy-duty vehicles shall have the following prominent statement printed on the label required in paragraph (a)(4) of this section: ''(Manufacturer's corporate name) has determined that this vehicle conforms to U.S. EPA regulations applicable to 19XX Model Year New Methanol-Fueled Heavy-Duty Vehicles when completed with a nominal fuel tank capacity not to exceed XXX gallons. Persons wishing to add fuel tank capacity beyond the above maximum must submit a written statement to the Administrator that the hydrocarbon storage system has been upgraded according to the requirements of 40 CFR 86.091–35(g)(2).''

(2) Persons wishing to add fuel tank capacity beyond the maximum specified on the label required in paragraph (g)(1) of this section shall:

(i) Increase the amount of fuel tank vapor storage material according to the following function:

$$\mathrm{Cap_f} = \mathrm{Cap_i}\left(\frac{\text{T. Vol.}}{\text{Max. Vol.}}\right)$$

Where:

$\mathrm{Cap_f}$=final amount of fuel tank vapor storage material, grams.

$\mathrm{Cap_i}$=initial amount of fuel tank vapor storage material, grams.

T. Vol.=total fuel tank volume of completed vehicle, gallons.

Max. Vol.=maximum fuel tank volume as specified on the label required in paragraph (g)(1) of this section, gallons.

(ii) Use, if applicable, hosing for fuel vapor routing which is at least as impermeable to hydrocarbon vapors as that used by the primary manufacturer.

(iii) Use vapor storage material with the same absorptive characteristics as that used by the primary manufacturer.

(iv) Connect, if applicable, any new hydrocarbon storage device to the existing hydrocarbon storage device in series such that the original hydrocarbon storage device is situated between the fuel tank and the new hydrocarbon storage device. The original hydrocarbon storage device shall be sealed such that vapors cannot reach the atmosphere. The elevation of the original hydrocarbon storage device shall be equal to or lower than the new hydrocarbon storage device.

(v) Submit a written statement to the Administrator that paragraphs (g)(2)(i) through (g)(2)(iv) of this section have been complied with.

(3) If applicable, the Administrator will send a return letter verifying the receipt of the written statement required in paragraph (g)(2)(v) of this section.

(h) *Notification of nonconformance penalty.* (1) Light-duty trucks and heavy-duty vehicles and engines for which nonconformance penalties are to be paid in accordance with § 86.1113–87(b) shall have the following information printed on the label required in paragraph (a) of this section. The manufacturer shall begin labeling production engines or vehicles within 10 days after the completion of the production compliance audity (PCA).

(i) The statement: ''The manufacturer of this engine/vehicle will pay a nonconformance penalty to be allowed to introduce it into commerce at an emission level higher than the applicable emission standard. The compliance level (or new emission standard) for this engine/vehicle is XXX.'' (The manufacturer shall insert the applicable pollutant and compliance level calculated in accordance with § 86.1112–87(a).)

(ii) [Reserved]

(2) If a manufacturer introduces an engine or vehicle into commerce prior to the compliance level determination of § 86.1112–87(a), it shall provide the engine or vehicle owner with a label as described above to be affixed in a location in proximity to the label required in paragraph (a) of this section within 30 days of the completion of the PCA.

(i) All light-duty vehicles and light-duty trucks shall comply with SAE Recommended Practices J1877 ''Recommended Practice for Bar-Coded Vehicle Identification Number Label,''

(MAY88), and J1892 ''Recommended Practice for Bar-Coded Vehicle Emission Configuration Label,'' (MAY88) except that label characters 3 through 7 as specified in J1892 shall be consistent with the standardized engine family name as revised by EPA for the application model year. SAE J1877 and J1892 are incorporated by reference. This incorporation by reference was approved by the Director of the Federal Register in accordance with 5 U.S.C. 552(a) and 1 CFR part 51. Copies may be obtained from the Society of Automotive Engineers, Inc., 400 Commonwealth Drive, Warrendale, PA 15096–0001. Copies may be inspected at Docket No. A–90–35 at EPA's Air Docket (LE–131), room 1500M, 1st Floor, Waterside Mall, 401 M St., SW., Washington, DC, or at the National Archives and Records Administration (NARA). For information on the availability of this material at NARA, call 202–741–6030, or go to: *http://www.archives.gov/federal_register/code_of_federal_regulations/ibr_locations.html*.

[56 FR 25750, June 5, 1991, as amended at 57 FR 31907, July 17, 1992; 58 FR 4035, Jan. 12, 1993; 58 FR 9487, Feb. 19, 1993; 58 FR 15799, Mar. 24, 1993; 58 FR 33209, June 16, 1993]

§ 86.094–38 Maintenance instructions.

Section 86.094–38 includes text that specifies requirements that differ from those specified in § 86.087–38. Where a paragraph in § 86.087–38 is identical and applicable to § 86.094–38, this may be indicated by specifying the corresponding paragraph and the statement ''[Reserved]. For guidance see § 86.087–38.''.

(a)–(f) [Reserved]. For guidance see § 86.087–38.

(g) Emission control diagnostic service information:

(1) Manufacturers shall furnish or cause to be furnished to any person engaged in the repairing or servicing of motor vehicles or motor vehicle engines, or the Administrator upon request, any and all information needed to make use of the on-board diagnostic system and such other information, including instructions for making emission-related diagnosis and repairs, including, but not limited to, service manuals, technical service bulletins, recall service information, data stream information, bi-directional control information, and training information, unless such information is protected by section 208(c) as a trade secret. No such information may be withheld under section 208(c) of the Act if that information is provided (directly or indirectly) by the manufacturer to franchised dealers or other persons engaged in the repair, diagnosing, or servicing of motor vehicles or motor vehicle engines.

(2) Emission-related information includes, but is not limited to:

(i) Information regarding any system, component or part of a vehicle that controls emissions and any system, components and/or parts associated with the powertrain system, including, but not limited to, the fuel system and ignition system;

(ii) Information for any system, component, or part that is likely to impact emissions, such as transmission systems; and

(iii) Any other information specified by the Administrator to be relevant for the diagnosis and repair of an emission failure found through the Inspection and Maintenance program, after such finding has been communicated to the affected manufacturer(s).

(3) All information required to be made available by this section shall be made available to persons referred to in this section at a fair and reasonable price, as determined by the Administrator. In reaching a decision, the Administrator shall consider all relevant factors, including, but not limited to, the cost to the manufacturer of preparing and/or providing the information, the type of information, the format in which it is provided, the price charged by other manufacturers for similar information, the differences that exist among manufacturers (e.g., the size of the manufacturer), the quantity of material contained in a publication, the detail of the information, the cost of the information prior to the effective date of this section, volume discounts, and inflation.

(4) Any information which is not provided at a fair and reasonable price shall be considered unavailable.

(5) By December 7, 1995, each manufacturer shall provide in a manner

specified in paragraph (g)(9) of this section an index of the information required to be made available by this section for 1994 and later model year vehicles which have been offered for sale; this requirement does not apply to indirect information, including the information specified in paragraph (g)(10) of this section. This index shall:

(i) Be updated on the first and third Monday of each month;

(ii) Provide titles that either adequately describes the contents of the document to which it refers or provides a brief description of the information contained in that document; and

(iii) Provide the cost of information and where it can be obtained.

(6) For vehicle models introduced more than four months after the effective date of this section, manufacturers shall make the information required under this section available to persons specified in paragraph (g)(1) of this section at the same time it is made available to dealerships, except as otherwise specified in this section.

(7) Each manufacturer shall maintain the index of information specified in paragraph (g)(5) of this section on FedWorld or other database designated by the Administrator. Manufacturers shall inform persons specified in paragraph (g)(1) of this section about the availability of the index in a manner prescribed by the Administrator.

(8) Each manufacturer shall be responsible for paying its pro rata share of any costs associated with establishing and maintaining the index of emission-related service and repair information provided for in paragraphs (g)(5) and (g)(7) of this section.

(9) Manufacturers or their designated distributors must mail requested information within one business day of receiving an order, and shall provide overnight delivery if the ordering party requests it and assumes the cost of delivery.

(10) All emission-related data stream information made available to manufacturers' franchised dealerships (or others in the service industry) shall be made available to the persons indicated in paragraph (g)(1) of this section either through provision of manufacturer equipment and tools or through provision of such information to equipment and tool manufacturers.

(11) Effective January 1, 1997, a manufacturer shall only provide bi-directional control to its franchised dealerships if it provides equipment and tool manufacturers with information to make diagnostic equipment with the same bi-directional control capabilities available to the dealerships, or if it provides such capabilities directly to persons specified in paragraph (g)(1) of this section by offering for sale at a reasonable cost through manufacturer tools.

(12) Manufacturers shall make data stream information and bi-directional control information available for all model years beginning with model year 1994 as specified in paragraphs (g)(10) and (g)(11) of this section. If a manufacturer can demonstrate, to the satisfaction of the Administrator, that safeguards for bi-directional controls are only installed in tools, not in vehicle on-board computers, then that manufacturer may receive a waiver from producing bi-directional controls for vehicles prior to the 1997 model year.

(13) Effective December 1, 1997, manufacturers shall make available in the manner described in paragraph (g)(16) of this section to persons specified in paragraph (g)(1) of this section reprogramming capability for all emission-related reprogramming events (including driveability reprogramming events that may affect emissions) that were issued prior to December 1, 1997 by manufacturers and that were made available to any manufacturer dealerships for model years 1994 through 1997; and manufacturers shall make available to persons indicated in paragraph (g)(1) of this section in the manner described in paragraph (g)(16) of this section reprogramming capability for all emission-related reprogramming events (including driveability reprogramming events that may affect emissions) that are issued by manufacturers on or after December 1, 1997, for 1994 and later model years at the same time they are made available to dealerships.

(14) For all vehicles, reprogramming need not be provided for any recalibrations performed prior to vehicles entering the stream of commerce (i.e., sale to first purchaser).

(15) If a manufacturer can demonstrate, to the satisfaction of the Administrator, that hardware would have to be retroactively installed on vehicles to meet security measures implemented by the manufacturer, the manufacturer may receive a waiver from the requirements of paragraph (g)(13) of this section for model years 1994 through 1996.

(16) Manufacturers shall either offer for sale at a competitive market price a reprogramming tool that interfaces with a substantial majority of generic portable computers or make available to aftermarket tool and equipment companies information that would enable them to manufacture such a tool. Any method adopted by a manufacturer by which reprogramming is made available to persons specified in paragraph (g)(1) of this section shall not impose a significant burden on such providers beyond that experienced by dealerships.

(17) Manufacturers shall be responsible for ensuring that persons specified in paragraph (g)(1) of this section shall have access to reprogramming services at a reasonable cost and in a timely manner.

(18) Manufacturers shall provide persons specified in paragraph (g)(1) of this section with an efficient and cost-effective method for identifying whether the calibrations on vehicles are the latest to be issued.

(19) Manufacturers shall either make available to aftermarket tool and equipment companies no later than the date of model introduction any and all information, except calibrations and recalibrations, needed to develop and manufacture generic tools that can be used by persons specified in paragraph (g)(1) of this section to diagnose, service and repair emission-related parts, components and systems or manufacturers may sell their own diagnostic tools and equipment to persons specified in paragraph (g)(1) of this section if the price of such tools is reasonable.

(20) A manufacturer is subject to a penalty of up to $25,000 per day per violation for failure to make available the information required by this section.

(21) Beginning December 24, 2003, rather than meeting the requirements of paragraphs (g)(5) through (g)(9) of this section, a manufacturer must upload the required information in full text on its manufacturer-specific Web site as required in § 86.096–38 (g)(3), except that for models not covered by § 86.096–38 but covered by § 86.094–38, a manufacturer may upload an index of the required information on its Web site consistent with paragraphs (g)(5), (g)(6), and (g)(9) of this section. Manufacturers who upload an index must allow parties identified in paragraph (g)(1) of this section to obtain information listed in the index either directly from the Web site, or from an alternate source whose telephone number is listed on the manufacturer Web site, or from a Web site hyperlinked to the manufacturer Web site. Manufacturers must also provide the price of each item listed, as well as the price of items ordered on a subscription basis. To the extent that any additional information is added or changed for these model years, manufacturers shall update the index as appropriate. Manufacturers will be responsible for ensuring that all requested information, whether requested directly from the manufacturer or the manufacturer's information distributors shall be distributed within one regular business day of receiving the order. Items that are less than 20 pages (*e.g.* technical service bulletins) shall be faxed, if requested, to the requestor and manufacturers are required to deliver the information overnight if requested and paid for by the ordering party.

[60 FR 40496, Aug. 9, 1995, as amended at 62 FR 31233, June 6, 1997; 68 FR 38449, June 27, 2003]

§ 86.095–14 Small-volume manufacturers certification procedures.

Section 86.095–14 includes text that specifies requirements that differ from § 86.094–14. Where a paragraph in § 86.094–14 is identical and applicable to § 86.095–14, this may be indicated by specifying the corresponding paragraph and the statement ''[Reserved]. For guidance see § 86.094–14.'' Where a corresponding paragraph of § 86.094–14 is

not applicable, this is indicated by the statement ''[Reserved].''

(a)–(c)(11)(ii)(B)(*15*) [Reserved]. For guidance see § 86.094–14.

(c)(11)(ii)(B)(*16*) A description of vehicle adjustments or modifications required by §§ 86.094–8(j) and 86.094–9(j), if any, to assure that light-duty vehicles and light-duty trucks covered by a certificate of conformity conform to the regulations while being operated at any altitude locations, and a statement of the altitude at which the adjustments or modifications apply.

(*17*) A description of the light-duty vehicles and light-duty trucks which are exempted from the high altitude emission standards.

(*18*) Proof that the manufacturer has obtained or entered an agreement to purchase, when applicable, the insurance policy required by the § 85.1510(b) of this chapter. The manufacturer may submit a copy of the insurance policy or purchase agreement as proof that the manufacturer has obtained or entered an agreement to purchase the insurance policy.

(C) The results of all emission tests the manufacturer performs to demonstrate compliance with the applicable standards.

(D)(*1*) The following statement signed by the authorized representative of the manufacturer: ''The vehicles (or engines) described herein have been tested in accordance with (list of the applicable subparts A, B, D, I, M, N, or P) of part 86, title 40, Code of Federal Regulations, and on the basis of those tests are in conformance with that subpart. All of the data and records required by that subpart are on file and are available for inspection by the EPA Administrator. We project the total U.S. sales of vehicles (engines) subject to this subpart (including all vehicles and engines imported under the provisions of 40 CFR 85.1505 and 40 CFR 85.1509) to be fewer than 10,000 units.''

(*2*) A statement as required by and contained in § 86.094–14(c)(5) signed by the authorized representative of the manufacturer.

(*3*) A statement that the vehicles or engines described in the manufacturer's application for certification are not equipped with auxiliary emission control devices which can be classified as a defeat device as defined in § 86.092–2.

(*4*) A statement of compliance with section 206(a)(3) of the Clean Air Act (42 U.S.C. 7525(a)(3)).

(*5*) A statement that, based on the manufacturer's engineering evaluation and/or emission testing, the light-duty vehicles and light-duty trucks comply with emission standards at high altitude unless exempt under § 86.094–8(h) or § 86.094–9(h).

(*6*) [Reserved]

(c)(11)(ii)(D)(*7*)–(c)(15) [Reserved]. For guidance see § 86.094–14.

[58 FR 4035, Jan. 12, 1993]

§ 86.095–23 Required data.

(a) The manufacturer shall perform the tests required by the applicable test procedures and submit to the Administrator the information described in paragraphs (b) through (l) of this section, provided, however, that if requested by the manufacturer, the Administrator may waive any requirement of this section for testing of vehicle (or engine) for which emission data are available or will be made available under the provisions of § 86.091–29.

(b) *Durability data.* (1)(i) The manufacturer shall submit exhaust emission durability data on such light-duty vehicles tested in accordance with applicable test procedures and in such numbers as specified, which will show the performance of the systems installed on or incorporated in the vehicle for extended mileage, as well as a record of all pertinent maintenance performed on the test vehicles.

(ii) The manufacturer shall submit exhaust emission deterioration factors for light-duty trucks and heavy-duty engines and all test data that are derived from the testing described under § 86.094–21(b)(5)(i)(A), as well as a record of all pertinent maintenance. Such testing shall be designed and conducted in accordance with good engineering practice to assure that the engines covered by a certificate issued under § 86.094–30 will meet each emission standard (or family emission limit, as appropriate) in § 86.094–9, § 86.091–10, or § 86.094–11 as appropriate, in actual use for the useful life applicable to that standard.

(2) For light-duty vehicles and light-duty trucks, the manufacturer shall submit evaporative emission deterioration factors for each evaporative emission family-evaporative emission control system combination and all test data that are derived from testing described under § 86.094–21(b)(4)(i) designed and conducted in accordance with good engineering practice to assure that the vehicles covered by a certificate issued under § 86.094–30 will meet the evaporative emission standards in § 86.094–8 or § 86.094–9, as appropriate, for the useful life of the vehicle.

(3) For heavy-duty vehicles equipped with gasoline-fueled or methanol-fueled engines, the manufacturer shall submit evaporative emission deterioration factors for each evaporative emission family-evaporative emission control system combination identified in accordance with § 86.094–21(b)(4)(ii). Furthermore, a statement that the test procedure(s) used to derive the deterioration factors includes, but need not be limited to, a consideration of the ambient effects of ozone and temperature fluctuations, and the service accumulation effects of vibration, time, and vapor saturation and purge cycling. The deterioration factor test procedure shall be designed and conducted in accordance with good engineering practice to assure that the vehicles covered by a certificate issued under § 86.094–30 will meet the evaporative emission standards in §§ 86.091–10 and § 86.094–11 in actual use for the useful life of the engine. Furthermore, a statement that a description of the test procedure, as well as all data, analyses, and evaluations, is available to the Administrator upon request.

(4)(i) For heavy-duty vehicles with a Gross Vehicle Weight Rating of up to 26,000 lbs and equipped with gasoline-fueled or methanol-fueled engines, the manufacturer shall submit a written statement to the Administrator certifying that the manufacturer's vehicles meet the standards of § 86.091–10 or § 86.094–11 (as applicable) as determined by the provisions of § 86.094–28. Furthermore, the manufacturer shall submit a written statement to the Administrator that all data, analyses, test procedures, evaluations, and other documents, on which the requested statement is based, are available to the Administrator upon request.

(ii) For heavy-duty vehicles with a Gross Vehicle Weight Rating of greater than 26,000 lbs and equipped with gasoline-fueled or methanol-fueled engines, the manufacturer shall submit a written statement to the Administrator certifying that the manufacturer's evaporative emission control systems are designed, using good engineering practice, to meet the standards of § 86.091–10 or § 86.094–11 (as applicable) as determined by the provisions of § 86.094–28. Furthermore, the manufacturer shall submit a written statement to the Administrator that all data, analyses, test procedures, evaluations, and other documents, on which the requested statement is based, are available to the Administrator upon request.

(c) *Emission data*—(1) *Certification vehicles.* The manufacturer shall submit emission data, including, in the case of methanol fuel, methanol, formaldehyde, and total hydrocarbon equivalent, on such vehicles tested in accordance with applicable test procedures and in such numbers as specified. These data shall include zero-mile data, if generated, and emission data generated for certification as required under § 86.094–26(a)(3)(i) or (ii). In lieu of providing emission data the Administrator may, on request of the manufacturer, allow the manufacturer to demonstrate (on the basis of previous emission tests, development tests, or other information) that the engine will conform with certain applicable emission standards of § 86.094–8 or § 86.094–9. Standards eligible for such manufacturer requests are those for idle CO emissions, smoke emissions, or particulate emissions from methanol-fueled diesel-cycle certification vehicles, and those for particulate emissions from model year 1994 and later gasoline-fueled or methanol-fueled Otto-cycle certification vehicles that are not certified to the Tier 0 standards of § 86.094–9(a)(1)(i), (ii), or § 86.094–8(a)(1)(i). Also eligible for such requests are standards for total hydrocarbon emissions from model year 1994 and later certification vehicles that are not certified to the Tier 0 standards of § 86.094–9(a)(1)(i),

(ii), or § 86.094–8(a)(1)(i). By separate request, including appropriate supporting test data, the manufacturer may request that the Administrator also waive the requirement to measure particulate emissions when conducting Selective Enforcement Audit testing of Otto-cycle vehicles.

(2) *Certification engines.* (i) The manufacturer shall submit emission data on such engines tested in accordance with applicable emission test procedures of this subpart and in such numbers as specified. These data shall include zero-hour data, if generated, and emission data generated for certification as required under § 86.094–26(c)(4). In lieu of providing emission data on idle CO emissions or particulate emissions from methanol- fueled diesel-cycle certification engines, or on CO emissions from petroleum-fueled or methanol-fueled diesel certification engines the Administrator may, on request of the manufacturer, allow the manufacturer to demonstrate (on the basis of previous emission tests, development tests, or other information) that the engine will conform with the applicable emission standards of § 86.094–11. In lieu of providing emission data on smoke emissions from methanol-fueled or petroleum-fueled diesel certification engines, the Administrator may, on the request of the manufacturer, allow the manufacturer to demonstrate (on the basis of previous emission tests, development tests, or other information) that the engine will conform with the applicable emissions standards of § 86.094–11, except for 1995 and 1996 model year engines with particulate matter certification levels exceeding 0.10 grams per brake horsepower-hour and 1997 or later model year engines with a particulate matter certification level exceeding 0.25 grams per brake horsepower-hour. In lieu of providing emissions data on smoke emissions from petroleum-fueled or methanol-fueled diesel engines when conducting Selective Enforcement Audit testing under 40 CFR part 86, subpart K, the Administrator may, on separate request of the manufacturer, allow the manufacturer to demonstrate (on the basis of previous emission tests, development tests, or other information) that the engine will conform with the applicable smoke emissions standards of § 86.094–11, except for 1995 and 1996 model year engines with particulate matter certification levels exceeding 0.10 grams per brake horsepower-hour and 1997 or later model year engines with a particulate matter certification level exceeding 0.25 grams per brake horsepower-hour.

(ii) For heavy-duty diesel engines, a manufacturer may submit hot-start data only, in accordance with subpart N of this part, when making application for certification. However, for confirmatory, Selective Enforcement Audit, and recall testing by the Agency, both the cold-start and hot-start test data, as specified in subpart N of this part, will be included in the official results.

(d) The manufacturer shall submit a statement that the vehicles (or engines) for which certification is requested conform to the requirements in § 86.084–5(b), and that the descriptions of tests performed to ascertain compliance with the general standards in § 86.084–5(b), and that the data derived from such tests are available to the Administrator upon request.

(e)(1) The manufacturer shall submit a statement that the test vehicles (or test engines) for which data are submitted to demonstrate compliance with the applicable standards (or family emission limits, as appropriate) of this subpart are in all material respects as described in the manufacturer's application for certification, that they have been tested in accordance with the applicable test procedures utilizing the fuels and equipment described in the application for certification, and that on the basis of such tests the vehicles (or engines) conform to the requirements of this part. If such statements cannot be made with respect to any vehicle (or engine) tested, the vehicle (or engine) shall be identified, and all pertinent data relating thereto shall be supplied to the Administrator. If, on the basis of the data supplied and any additional data as required by the Administrator, the Administrator determines that the test vehicles (or test engine) was not as described in the application for certification or was not tested in accordance

with the applicable test procedures utilizing the fuels and equipment as described in the application for certification, the Administrator may make the determination that the vehicle (or engine) does not meet the applicable standards (or family emission limits, as appropriate). The provisions of § 86.094–30(b) shall then be followed.

(2) For evaporative emission durability, or light-duty truck or heavy-duty engine exhaust emission durability, the manufacturer shall submit a statement of compliance with paragraph (b)(1)(ii), (b)(2), or (b)(3) of this section, as applicable.

(f) Additionally, manufacturers participating in the particulate averaging program for diesel light-duty vehicles and diesel light-duty trucks shall submit:

(1) In the application for certification, a statement that the vehicles for which certification is requested will not, to the best of the manufacturer's belief, when included in the manufacturer's production-weighted average emission level, cause the applicable particulate standard(s) to be exceeded, and

(2) No longer than 90 days after the end of a given model year of production of engine families included in one of the diesel particulate averaging programs, the number of vehicles produced in each engine family at each certified particulate FEL, along with the resulting production-weighted average particulate emission level.

(g) Additionally, manufacturers participating in the NO_X averaging program for light-duty trucks shall submit:

(1) In the application for certification, a statement that the vehicles for which certification is required will not, to the best of the manufacturer's belief, when included in the manufacturer's production-weighted average emission level, cause the applicable NO_X standard(s) to be exceeded, and

(2) No longer than 90 days after the end of a given model year of production of engine families included in the NO_X averaging program, the number of vehicles produced in each engine family at each certified NO_X emission level.

(h) Additionally, manufacturers participating in any of the NO_X and/or particulate averaging, trading, or banking programs for heavy-duty engines shall submit for each participating family the items listed in paragraphs (h)(1) through (3) of this section.

(1) Application for certification. (i) The application for certification will include a statement that the engines for which certification is requested will not, to the best of the manufacturer's belief, when included in any of the averaging, trading, or banking programs cause the applicable NO_X or particulate standard(s) to be exceeded.

(ii) The application for certification will also include the type (NO_X or particulate) and the projected number of credits generated/needed for this family, the applicable averaging set, the projected U.S. (49-state) production volumes, by quarter, NCPs in use on a similar family and the values required to calculate credits as given in § 86.094–15. Manufacturers shall also submit how and where credit surpluses are to be dispersed and how and through what means credit deficits are to be met, as explained in § 86.094–15. The application must project that each engine family will be in compliance with the applicable NO_X and/or particulate emission standards based on the engine mass emissions, and credits from averaging, trading and banking.

(2) [Reserved]

(3) End-of-year report. The manufacturer shall submit end-of-year reports for each engine family participating in any of the averaging, trading, or banking programs, as described in paragraphs (h)(3)(i) through (iv) of this section.

(i) These reports shall be submitted within 90 days of the end of the model year to: Director, Manufacturers Operations Division (6405J), U.S. Environmental Protection Agency, 1200 Pennsylvania Ave., NW., Washington, DC 20460.

(ii) These reports shall indicate the engine family, the averaging set, the actual U.S. (49-state) production volume, the values required to calculate credits as given in § 86.094–15, the resulting type (NO_X or particulate) and number of credits generated/required, and the NCPs in use on a similar NCP family. Manufacturers shall also submit how and where credit surpluses

were dispersed (or are to be banked) and how and through what means credit deficits were met. Copies of contracts related to credit trading must also be included or supplied by the broker if applicable. The report shall also include a calculation of credit balances to show that net mass emissions balances are within those allowed by the emission standards (equal to or greater than a zero credit balance). The credit discount factor described in § 86.094–15 must be included as required.

(iii) The 49-state production counts for end-of-year reports shall be based on the location of the first point of retail sale (e.g., customer, dealer, secondary manufacturer) by the manufacturer.

(iv) Errors discovered by EPA or the manufacturer in the end-of-year report, including changes in the 49 state production counts, may be corrected up to 180 days subsequent to submission of the end-of-year report. Errors discovered by EPA after 180 days shall be corrected if credits are reduced. Errors in the manufacturer's favor will not be corrected if discovered after the 180 day correction period allowed.

(i) Failure by a manufacturer participating in the averaging, trading, or banking programs to submit any quarterly or end-of-year report (as applicable) in the specified time for all vehicles and engines that are part of an averaging set is a violation of section 203(a)(1) of the Clean Air Act (42 U.S.C. 7522(a)(1)) for each such vehicle and engine.

(j) Failure by a manufacturer generating credits for deposit only in either the HDE NO_X or particulate banking programs to submit their end-of-year reports in the applicable specified time period (i.e., 90 days after the end of the model year) shall result in the credits not being available for use until such reports are received and reviewed by EPA. Use of projected credits pending EPA review will not be permitted in these circumstances.

(k) Engine families certified using NCPs are not required to meet the requirements outlined above.

(l) Additionally, manufacturers certifying vehicles shall submit for each model year 1994 through 1997 light-duty vehicle and light light-duty truck engine family and each model year 1996 through 1998 heavy light-duty truck engine family the information listed in paragraphs (l) (1) and (2) of this section.

(1) Application for certification. In the application for certification, the manufacturer shall submit the projected sales volume of engine families certifying to the respective standards, and the in-use standards that each engine family will meet. Volume projected to be produced for U.S. sale may be used in lieu of projected U.S. sales.

(2) End-of-year reports for each engine family.

(i) These end-of-year reports shall be submitted within 90 days of the end of the model year to: Director, Manufacturers Operations Division (6405J), U.S. Environmental Protection Agency, 1200 Pennsylvania Ave., NW., Washington, DC 20460.

(ii) These reports shall indicate the model year, engine family, and the actual U.S. sales volume. The manufacturer may petition the Administrator to allow volume produced for U.S. sale to be used in lieu of U.S. sales. Such petition shall be submitted within 30 days of the end of the model year to the Manufacturers Operations Division. For the petition to be granted, the manufacturer must establish to the satisfaction of the Administrator that production volume is functionally equivalent to sales volume.

(iii) The U.S. sales volume for end-of-year reports shall be based on the location of the point of sale to a dealer, distributor, fleet operator, broker, or any other entity which comprises the point of first sale.

(iv) Failure by a manufacturer to submit the end-of-year report within the specified time may result in certificate(s) for the engine family(ies) certified to Tier 0 certification standards being voided ab initio plus any applicable civil penalties for failure to submit the required information to the Agency.

(v) These reports shall include the information required under § 86.094–7(h)(1). The information shall be organized in such a way as to allow the Administrator to determine compliance with the Tier 1 standards implementation schedules of §§ 86.094–8 and 86.094–9,

and the Tier 1 and Tier 1_I implementation schedules of §§ 86.708–94 and 86.709–94.

[58 FR 66294, Dec. 20, 1993, as amended at 59 FR 14110, Mar. 25, 1994]

§ 86.095–24 Test vehicles and engines.

Section 86.095–24 includes text that specifies requirements that differ from § 86.094–24. Where a paragraph in § 86.094–24 is identical and applicable to § 86.095–24, this may be indicated by specifying the corresponding paragraph and the statement ''[Reserved]. For guidance see § 86.094–24.'' Where a corresponding paragraph of § 86.094–24 is not applicable, this is indicated by the statement ''[Reserved].''

(a)–(b)(1)(v) introductory text [Reserved]. For guidance see § 86.094–24.

(b)(1)(v)(A) The manufacturer will select for testing under high-altitude conditions the vehicle expected to exhibit the highest emissions from the nonexempt vehicles selected in accordance with § 86.094–24(b)(1) (ii), (iii), and (iv); or

(B) In lieu of testing vehicles according to paragraph (b)(1)(v)(A) of this section, a manufacturer may provide a statement in its application for certification that, based on the manufacturer's engineering evaluation of such high-altitude emission testing as the manufacturer deems appropriate that all light-duty vehicles and light-duty trucks not exempt under § 86.090–8(h) or § 86.094–9(h) comply with the emission standards at high altitude.

(vi) If 90 percent or more of the engine family sales will be in California, a manufacturer may substitute emission data vehicles selected by the California Air Resources Board criteria for the selections specified in § 86.094–24(b)(1) (i), (ii), and (iv).

(vii)(A) Vehicles of each evaporative emission family will be divided into evaporative emission control systems.

(B) The Administrator will select the vehicle expected to exhibit the highest evaporative emissions, from within each evaporative family to be certified, from among the vehicles represented by the exhaust emission data selections for the engine family, unless evaporative testing has already been completed on the vehicle expected to exhibit the highest evaporative emissions for the evaporative family as part of another engine family's testing.

(C) If the vehicles selected in accordance with paragraph (b)(1)(vii)(B) of this section do not represent each evaporative emission control system then the Administrator will select the highest expected evaporative emission vehicle from within the unrepresented evaporative system.

(viii) For high-altitude evaporative emission compliance for each evaporative emission family, the manufacturer shall follow one of the following procedures:

(A) The manufacturer will select for testing under high-altitude conditions the one nonexempt vehicle previously selected under paragraph (b)(1)(vii) (B) or (C) of this section which is expected to have the highest level of evaporative emissions when operated at high altitude; or

(B) In lieu of testing vehicles according to § 86.094–24(b)(1)(viii)(A), a manufacturer may provide a statement in its application for certification that, based on the manufacturer's engineering evaluation of such high-altitude emission testing as the manufacturer deems appropriate, that all light-duty vehicles and light-duty trucks not exempt under § 86.090–8(h) or § 86.094–9(h) comply with the emission standards at high altitude.

(ix) Vehicles selected under paragraph (b)(1)(v)(A) of this section may be used to satisfy the requirements of paragraph (b)(1)(viii)(A) of this section.

(x) [Reserved]

(b)(2)–(h) [Reserved]. For guidance see § 86.094–24.

[58 FR 4035, Jan. 12, 1993]

§ 86.095–26 Mileage and service accumulation; emission measurements.

Section 86.095–26 includes text that specifies requirements that differ from § 86.094–26. Where a paragraph in § 86.094–26 is identical and applicable to § 86.095–26, this may be indicated by specifying the corresponding paragraph and the statement ''[Reserved]. For guidance see § 86.094–26.'' Where a corresponding paragraph of § 86.094–26 is not applicable, this is indicated by the statement ''[Reserved].''

(a)–(b)(4)(i)(C) [Reserved]. For guidance see § 86.094–26.

(b)(4)(i)(D) For each engine family, the manufacturer will either select one vehicle previously selected under § 86.094–24(b)(1) (i) through (iv) to be tested under high altitude conditions or provide a statement in accordance with § 86.095–24(b)(1)(v). Vehicles shall meet emission standards under both low- and high-altitude conditions without manual adjustments or modifications. In addition, any emission control device used to conform with the emission standards under high-altitude conditions shall initially actuate (automatically) no higher than 4,000 feet above sea level.

(ii) *Diesel.* (A) The manufacturer shall determine, for each engine family, the mileage at which the engine-system combination is stabilized for emission data testing. The manufacturer shall maintain, and provide to the Administrator if requested, a record of the rationale used in making this determination. The manufacturer may elect to accumulate 4,000 miles on each test vehicle within an engine family without making a determination. The manufacturer must accumulate a minimum of 2,000 miles (3,219 kilometers) on each test vehicle within an engine family. All test vehicle mileage must be accurately determined, recorded, and reported to the Administrator. Any vehicle used to represent emission data vehicle selections under § 86.094–24(b)(1) shall be equipped with an engine and emission control system that has accumulated the mileage the manufacturer chose to accumulate on the test vehicle. Fuel economy data generated from certification vehicles selected in accordance with § 86.094–24(b)(1) with engine-system combinations that have accumulated more than 10,000 kilometers (6,200 miles) shall be factored in accordance with § 600.006–87(c) of this chapter. Complete exhaust emission tests shall be conducted for each emission data vehicle selection under § 86.094–24(b)(1). The Administrator may determine under § 86.094–24(f) that no testing is required.

(B) Emission tests for emission data vehicle(s) selected for testing under § 86.094–24(b)(1)(v) shall be conducted at the mileage (2,000 mile minimum) at which the engine-system combination is stabilized for emission testing or at the 6,436 kilometer (4,000 mile) test point under high-altitude conditions.

(C) Exhaust and evaporative emission tests for emission data vehicle(s) selected for testing under § 86.094–24(b)(1) (ii), (iii), and (iv) shall be conducted at the mileage (2,000 mile minimum) at which the engine-system combination is stabilized for emission testing or at the 6,436 kilometer (4,000 mile) test point under low-altitude conditions.

(D) For each engine family, the manufacturer will either select one vehicle previously selected under § 86.094–26(b)(1) (i) through (iv) to be tested under high altitude conditions or provide a statement in accordance with § 86.095–24(b)(1)(v). Vehicles shall meet emission standards under both low- and high-altitude conditions without manual adjustments or modifications. In addition, any emission control device used to conform with the emission standards under high-altitude conditions shall initially actuate (automatically) no higher than 4,000 feet above sea level.

(b)(4)(iii)–(d) [Reserved]. For guidance see § 86.094–26.

[58 FR 4036, Jan. 12, 1993]

§ 86.095–30 Certification.

Section 86.095–30 includes only text that specifies requirements that differ from § 86.094–30. Where a paragraph in § 86.094–30 is identical and applicable to § 86.095–30, this is indicated by specifying the corresponding paragraph and the statement ''[Reserved]. For guidance see § 86.094–30.'' Where a corresponding paragraph of § 86.094–30 is not applicable, this is indicated by the statement ''[Reserved].''

(a)(1)(i)–(a)(2) [Reserved]. For guidance see § 86.094–30.

(a)(3)(i) One such certificate will be issued for each engine family. For gasoline-fueled and methanol-fueled light-duty vehicles and light-duty trucks, one such certificate will be issued for each engine family evaporative emission family combination. Each certificate will certify compliance with no more than one set of in-use and certification standards (or family emission limits, as appropriate).

(ii) For gasoline-fueled and methanol fueled heavy-duty vehicles, one such

certificate will be issued for each manufacturer and will certify compliance for those vehicles previously identified in that manufacturer's statement(s) of compliance as required in § 86.094–23(b)(4) (i) and (ii).

(iii) For diesel light-duty vehicles and light-duty trucks, or diesel heavy-duty engines, included in the applicable particulate averaging program, the manufacturer may at any time during production elect to change the level of any family particulate emission limit by demonstrating compliance with the new limit as described in §§ 86.094–28(a)(6) and 86.094–28(b)(5)(i). New certificates issued under this paragraph will be applicable only for vehicles (or engines) produced subsequent to the date of issuance.

(iv) For light-duty trucks or heavy-duty engines included in the applicable NO_X averaging program, the manufacturer may at any time during production elect to change the level of any family NO_X emission limit by demonstrating compliance with the new limit as described in § 86.094–28(b)(5)(ii). New certificates issued under this paragraph will be applicable only for vehicles (or engines) produced subsequent to the day of issue.

(4)(i) For exempt light-duty vehicles and light-duty trucks under the provisions of §§ 86.094–8(j) or 86.094–9(j), an adjustment or modification performed in accordance with instructions provided by the manufacturer for the altitude where the vehicle is principally used will not be considered a violation of section 203(a)(3) of the Clean Air Act (42 U.S.C. 7522(a)(3)).

(ii) A violation of section 203(a)(1) of the Clean Air Act (42 U.S.C. 7522(a)(1)) occurs when a manufacturer sells or delivers to an ultimate purchaser any light-duty vehicle or light-duty truck, subject to the regulations under the Act, under any of the conditions specified in paragraph (a)(4)(ii) of this section.

(A) When a light-duty vehicle or light-duty truck is exempted from meeting high-altitude requirements as provided in § 86.090–8(h) or § 86.094–9(h):

(*1*) At a designated high-altitude location, unless such manufacturer has reason to believe that such vehicle will not be sold to an ultimate purchaser for principal use at a designated high-altitude location; or

(*2*) At a location other than a designated high-altitude location, when such manufacturer has reason to believe that such motor vehicle will be sold to an ultimate purchaser for principal use at a designated high-altitude location.

(B) When a light-duty vehicle or light-duty truck is exempted from meeting low-altitude requirements as provided in § 86.094–8(i) or § 86.094–9(i):

(*1*) At a designated low-altitude location, unless such manufacturer has reason to believe that such vehicle will not be sold to an ultimate purchaser for principal use at a designated low-altitude location; or

(*2*) At a location other than a designated low-altitude location, when such manufacturer has reason to believe that such motor vehicle will be sold to an ultimate purchaser for principal use at a designated low-altitude location.

(iii) A manufacturer shall be deemed to have reason to believe that a light-duty vehicle or light-duty truck that has been exempted from compliance with emission standards at high altitude, will not be sold to an ultimate purchaser for principal use at a designated high altitude location if the manufacturer has informed its dealers and field representatives about the terms of those high altitude regulations, has not caused the improper sale itself, and has taken reasonable action which shall include, but shall not be limited to, either § 86.094–30(a)(4)(iii)(A) or (B), and § 86.094–30(a)(4)(iii)(C).

(a)(4)(iii)(A)–(C) [Reserved]. For guidance see § 86.094–30.

(a)(4)(iv) A manufacturer shall be deemed to have reason to believe that a light-duty vehicle or light-duty truck which has been exempted from compliance with emission standards at low altitude, as provided in § 86.094–8(i) or § 86.094–9(i), will not be sold to an ultimate purchaser for principal use at a designated low-altitude location if the manufacturer has informed its dealers and field representatives about the terms of the high-altitude regulations, has not caused the improper sale itself, and has taken reasonable action which

shall include, but not be limited to either § 86.094–30 (a)(4)(iv) (A) or (B) and § 86.094–30(a)(4)(iv)(C):

(a)(4)(iv)(A)–(a)(12) [Reserved]. For guidance see § 86.094–30.

(a)(13) For all light-duty trucks certified to Tier 0 standards under § 86.094–9 and to which standards under § 86.709–94 are applicable:

(i) All certificates issued are conditional upon the manufacturer complying with all provisions of §§ 86.094–9 and 86.709–94 both during and after model year production.

(ii) Failure to meet the required implementation schedule sales percentages as specified in §§ 86.094–9 and 86.709–94 will be considered to be a failure to satisfy the conditions upon which the certificate(s) was issued and the individual vehicles sold in violation of the implementation schedule shall not be covered by the certificate.

(iii) The manufacturer shall bear the burden of establishing to the satisfaction of the Administrator that the conditions upon which the certificate was issued were satisfied.

(a)(14)–(e)(8) [Reserved]. For guidance see § 86.094–30.

(f) For engine families required to have an emission control diagnostic system, certification will not be granted if, for any emission data vehicle or other test vehicle approved by the Administrator, the malfunction indicator light does not illuminate under any of the following circumstances, or if, for any assembly line vehicle, the malfunction indicator light does not illuminate under the circumstances described in paragraph (f)(4) of this section. Only paragraph (f)(4) of this section applies for diesel cycle vehicles.

(1) A catalyst is replaced with a deteriorated or defective catalyst or electronic simulation of such resulting in both an exhaust emission exceedance of 0.6 g/mi HC and an exhaust emission increase of 0.4 g/mi HC on a normal temperature (20 to 30 °C) emission certification test.

(2) A misfire condition is induced resulting in an increase in emissions of greater than 0.4 g/mi HC or 3.4 g/mi CO or 1.0 g/mi NO_X on a normal temperature (20 to 30 °C) emission certification test.

(3) Any oxygen sensor is replaced with a deteriorated or defective oxygen sensor, or the operation of such a sensor is simulated, resulting in an increase in emissions of 0.2 g/mi HC or 1.7 g/mi CO or 0.5 g/mi NO_X on a normal temperature (20 to 30 °C) emission certification test.

(4) The electronic evaporative purge control device (if equipped) is disconnected or the operation of any emission-related powertrain component connected to a computer results in an increase in emissions of 0.2 g/mi HC or 1.7 g/mi CO or 0.5 g/mi NO_X on a normal temperature (20 to 30 °C) emission certification test.

[58 FR 4037, Jan. 12, 1993, as amended at 58 FR 9487, Feb. 19, 1993; 60 FR 15247, Mar. 23, 1995]

§ 86.095–35 Labeling.

Section 86.095–35 includes text that specifies requirements that differ from § 86.092–35. Where a paragraph in § 86.092–35 is identical and applicable to § 86.095–35, this may be indicated by specifying the corresponding paragraph and the statement ''[Reserved]. For guidance see § 86.092–35.'' Where a corresponding paragraph of § 86.092–35 is not applicable, this is indicated by the statement ''[Reserved].''

(a) The manufacturer of any motor vehicle (or motor vehicle engine) subject to the applicable emission standards (and family emission limits, as appropriate) of this subpart, shall, at the time of manufacture, affix a permanent legible label, of the type and in the manner described below, containing the information hereinafter provided, to all production models of such vehicles (or engines) available for sale to the public and covered by a Certificate of Conformity under § 86.091–30(a).

(1) *Light-duty vehicles.* (i) A permanent, legible label shall be affixed in a readily visible position in the engine compartment.

(ii) The label shall be affixed by the vehicle manufacturer who has been issued the Certificate of Conformity for such vehicle, in such manner that it cannot be removed without destroying or defacing the label. The label shall not be affixed to any equipment which is easily detached from such vehicle.

(iii) The label shall contain the following information lettered in the English language in block letters and numerals, which shall be of a color that contrasts with the background of the label:

(A) The label heading: Vehicle Emission Control Information;

(B) Full corporate name and trademark of manufacturer;

(C) Engine displacement (in cubic inches or liters), engine family identification, and evaporative family identification;

(D) Engine tune-up specifications and adjustments, as recommended by the manufacturer in accordance with the applicable emission standards (or family emission limits, as applicable), including but not limited to idle speed(s), ignition timing, the idle air-fuel mixture setting procedure and value (e.g., idle CO, idle air-fuel ratio, idle speed drop), high idle speed, initial injection timing and valve lash (as applicable), as well as other parameters deemed necessary by the manufacturer. These specifications should indicate the proper transmission position during tuneup and what accessories (e.g., air conditioner), if any, should be in operation;

(E) An unconditional statement of compliance with the appropriate model year U.S. Environmental Protection Agency regulations which apply to light-duty vehicles;

(F) The exhaust emission standards (or family emission limits, if applicable) to which the engine family is certified, and the corresponding exhaust emission standards (or family emission limits, if applicable) which the engine family must meet in-use;

(G) For vehicles that have been exempted from compliance with the emission standards at high altitude, as specified in § 86.090–8(h):

(*1*) A highlighted statement (e.g., underscored or boldface letters) that the vehicle is certified to applicable emission standards at low altitude only;

(*2*) A statement that the vehicle's unsatisfactory performance under high-altitude conditions makes it unsuitable for principal use at high altitude; and

(*3*) A statement that the emission performance warranty provisions of 40 CFR part 85, subpart V do not apply when the vehicle is tested at high altitude;

(H) For vehicles that have been exempted from compliance with the emission standards at low altitude, as specified in § 86.094–8(i):

(*1*) A highlighted statement (e.g., underscore or boldface letters) that the vehicle is certified to applicable emission standards at high altitude only; and

(*2*) A statement that the emission performance warranty provisions of 40 CFR part 85, subpart V do not apply when the vehicle is tested at low altitude;

(I) The vacuum hose routing diagram applicable to the vehicles if the vehicles are equipped with vacuum actuated emission and emission-related components. The manufacturer may, at its option, use a separate label for the vacuum hose routing diagram provided that the vacuum hose diagram is placed in a visible and accessible position as provided in this section;

(J) Vehicles granted final admission under § 85.1505 of this chapter must comply with the labeling requirements contained in § 85.1510 of this chapter.

(K) Vehicles which have been certified under the provisions of § 86.094–8(j) must comply with the labeling requirements contained in § 86.1606.

(L) If applicable, a statement that the vehicle is exempt from cold temperature carbon monoxide standards.

(2) *Light-duty truck and heavy-duty vehicles optionally certified in accordance with the light-duty truck provisions.* (i) A legible, permanent label shall be affixed in a readily visible position in the engine compartment.

(ii) The label shall be affixed by the vehicle manufacturer who has been issued the certificate of conformity for such vehicle, in such a manner that it cannot be removed without destroying or defacing the label. The label shall not be affixed to any equipment which is easily detached from such vehicle.

(iii) The label shall contain the following information lettered in the English language in block letters and numerals, which shall be of a color that contrasts with the background of the label.

(A) The label heading: Important Vehicle Information;

(B) Full corporate name and trademark of the manufacturer;

(C) Engine displacement (in cubic inches or liters), engine family identification, and evaporative family;

(D) Engine tune-up specifications and adjustments, as recommended by the manufacturer in accordance with the applicable emission standards (or family emission limits, as appropriate), including but not limited to idle speed(s), ignition timing, the idle air-fuel mixture setting procedure and value (e.g., idle CO, idle air-fuel ratio, idle speed drop), high idle speed, initial injection timing, as well as other parameters deemed necessary by the manufacturer. These specifications should indicate the proper transmission position during tune-up and what accessories (e.g., air conditioner), if any, should be in operation;

(E)(*1*) *Light-duty trucks.* The prominent statement, ''This vehicle conforms to U.S. EPA regulations applicable to 19XX Model Year New Light-Duty Trucks.''

(*2*) *Heavy-duty vehicles optionally certified in accordance with the light-duty truck provisions.* The prominent statement, ''This heavy-duty vehicle conforms to the U.S. EPA regulations applicable to 19XX Model Year Light-Duty Trucks under the special provision of 40 CFR 86.092–1(b).'';

(F) [Reserved]

(G) For light-duty trucks that have been exempted from compliance with the emission standards at high altitude, as specified in § 86.094–9(h):

(*1*) A highlighted statement (e.g., underscored or boldface letters) that the vehicle is certified to applicable emission standards at low altitude only;

(*2*) A statement that the vehicle's unsatisfactory performance under high-altitude conditions makes it unsuitable for principal use at high altitude; and

(*3*) A statement that the emission performance warranty provisions of 40 CFR part 85, subpart V do not apply when the vehicle is tested at high altitude;

(H) For light-duty trucks that have been exempted from compliance with the emission standards at low altitude, as specified in § 86.094–9(i):

(*1*) A highlighted statement (e.g., underscored or boldface letters) that the vehicle is certified to applicable emission standards at high altitude only; and

(*2*) A statement that the emission performance warranty provisions of 40 CFR part 85, subpart V do not apply when the vehicle is tested at low altitude;

(I) Light-duty trucks which have been certified under the provisions of § 86.094–9(j) must comply with the labeling requirements contained in § 86.1606;

(J) The exhaust emission standards (or family emission limits, if applicable) to which the engine family is certified, and the corresponding exhaust emission standards (or family emission limits, if applicable) which the engine family must meet in-use.

(K) The vacuum hose routing diagram applicable to the vehicles if the vehicles are equipped with vacuum actuated emission and emission-related components. The manufacturer may, at its option, use a separate label for the vacuum hose routing diagram provided that the vacuum hose diagram is placed in a visible and accessible position as provided by this section.

(L) [Reserved]

(M) Vehicles granted final admission under § 85.1505 of this chapter must comply with the labeling requirements contained in § 85.1510 of this chapter.

(N) If applicable, a statement that the vehicle is exempt from cold temperature carbon monoxide standards.

(3) *Heavy-duty engines.* (i) A permanent legible label shall be affixed to the engine in a position in which it will be readily visible after installation in the vehicle.

(ii) The label shall be attached to an engine part necessary for normal engine operation and not normally requiring replacement during engine life.

(iii) The label shall contain the following information lettered in the English language in block letters and numerals which shall be of a color that contrasts with the background of the label:

(A) The label heading: ''Important Engine Information.'';

(B) The full corporate name and trademark of the manufacturer; though the label may identify another company and use its trademark instead of the manufacturer's as long as the

manufacturer complies with the provisions of 40 CFR 1039.640.

(C) Engine displacement (in cubic inches or liters) and engine family and model designations;

(D) Date of engine manufacture (month and year). The manufacturer may, in lieu of including the date of manufacture on the engine label, maintain a record of the engine manufacture dates. The manufacturer shall provide the date of manufacture records to the Administrator upon request;

(E) Engine specifications and adjustments as recommended by the manufacturer. These specifications should indicate the proper transmission position during tune-up and what accessories (e.g., air conditioner), if any, should be in operation;

(F) For Otto-cycle engines the label should include the idle speed, ignition timing, and the idle air-fuel mixture setting procedure and value (e.g., idle CO, idle air-fuel ratio, idle speed drop), and valve lash;

(G) For diesel engines the label should include the advertised hp at rpm, fuel rate at advertised hp in mm^3/stroke, valve lash, initial injection timing, and idle speed;

(H) The prominent statement: ''This engine conforms to U.S. EPA regulations applicable to 19XX Model Year New Heavy-Duty Engines.'';

(I) If the manufacturer is provided with an alternate useful life period under the provisions of § 86.094–21(f), the prominent statement: ''This engine has been certified to meet U.S. EPA standards for a useful-life period of XXX miles or XXX hours of operation, whichever occurs first. This engine's actual life may vary depending on its service application.'' The manufacturer may alter this statement only to express the assigned alternate useful life in terms other than miles or hours (e.g., years, or hours only);

(J) *For diesel engines*. The prominent statement: ''This engine has a primary intended service application as a XXX heavy-duty engine.'' (The primary intended service applications are light, medium, and heavy, as defined in § 86.902–2.);

(K) *For Otto-cycle engines*. One of the following statements, as applicable:

(*1*) For engines certified to the emission standards under § 86.091–10 (a)(1)(i) or (iii), the statement: ''This engine is certified for use in all heavy-duty vehicles.'';

(*2*) For gasoline-fueled engines certified under the provisions of § 86.091–10(a)(3)(i), the statement: ''This engine is certified for use in all heavy-duty vehicles under the special provision of 40 CFR 86.091–10(a)(3)(i).'';

(*3*) For engines certified to the emission standards under § 86.091–10(a)(1) (ii) or (iv), the statement: ''This engine is certified for use only in heavy-duty vehicles with a gross vehicle weight rating above 14,000 lbs.'';

(L) For diesel engines which are included in the diesel heavy-duty particulate averaging program, the family particulate emission limit to which the engine is certified;

(M) For any heavy-duty engines which are included in the heavy-duty NO_X averaging program, the family NO_X emission limit to which the engine is certified;

(N) Engines granted final admission under § 85.1505 of this chapter must comply with the labeling requirements contained in § 85.1510 of this chapter.

(O) For diesel engines which have been certified to comply with the urban bus particulate standard of 40 CFR 86.094–11(a)(1)(iv)(A), the statement ''This engine is certified for use in an urban bus as defined at 40 CFR 86.093–2.'' Unless waived by the Administrator on the basis of impracticality, for diesel engines not certified to comply with the urban bus particulate standard, the statement ''This engine is not certified for use in an urban bus as defined at 40 CFR 86.093–2. Sales of this engine for use in an urban bus is a violation of Federal law under the Clean Air Act.''

(iv) The label may be made up of one or more pieces: Provided, That all pieces are permanently attached to the same engine or vehicle part as applicable.

(4) *Heavy-duty vehicles employing a fuel or fuels covered by evaporative emission standards*. (i) A permanent, legible label shall be affixed in a readily visible position in the engine compartment. If such vehicles do not have an

engine compartment, the label required in paragraphs (a)(4) and (g)(1) of this section shall be affixed in a readily available position on the operator's enclosure or on the engine.

(ii) The label shall be affixed by the vehicle manufacturer who has been issued the Certificate of Conformity for such vehicle, in such a manner that it cannot be removed without destroying or defacing the label. The label shall not be affixed to any equipment which is easily detached from such vehicle.

(iii) The label shall contain the following information lettered in the English language in block letters and numerals, which shall be of a color that contrasts with the background of the label:

(A) The label heading: Vehicle Emission Control Information;

(B) Full corporate name and trademark of manufacturer;

(C) Evaporative family identification;

(D) The maximum nominal fuel tank capacity (in gallons) for which the evaporative control system is certified (this requirement does not apply to vehicles whose evaporative control system efficiency is not dependent on fuel tank capacity); and

(E) An unconditional statement of compliance with the appropriate model year U.S. Environmental Protection Agency regulations which apply to XXX-fueled heavy-duty vehicles.

(F) Vehicles granted final admission under § 85.1505 of this chapter must comply with the labeling requirements contained in § 85.1510 of this chapter.

(b) The provisions of this section shall not prevent a manufacturer from also reciting on the label that such vehicle (or engine) conforms to any applicable state emission standards for new motor vehicles (or new motor vehicle engines) or any other information that such manufacturer deems necessary for, or useful to, the proper operation and satisfactory maintenance of the vehicle (or engine).

(c)(1) The manufacturer of any light-duty vehicle or light-duty truck subject to the emission standards (or family emission limits, as appropriate) of this subpart shall, in addition and subsequent to setting forth those statements on the label required by the Department of Transportation (DOT) pursuant to 49 CFR 567.4, set forth on the DOT label or an additional label located in proximity to the DOT label and affixed as described in 49 CFR 567.4(b), the following information in the English language, lettered in block letters and numerals not less than three thirty-seconds of an inch high, of a color that contrasts with the background of the label:

(i) The heading: ''Vehicle Emission Control Information.''

(ii)(A) *For light-duty vehicles*, the statement: ''This Vehicle Conforms to U.S. EPA Regulations Applicable to XXX-Fueled 19XX Model Year New Motor Vehicles.''

(B) *For light-duty trucks*, *(1)* the statement: ''This vehicle conforms to U.S. EPA regulations applicable to XXX-Fueled 19XX Model Year New Light-Duty Trucks.''

(*2*) [Reserved]

(iii) One of the following statements, as applicable, in letters and numerals not less than six thirty-seconds of an inch high and of a color that contrasts with the background of the label:

(A) For all vehicles certified as non-catalyst-equipped: ''NON-CATALYST'';

(B) For all vehicles certified as catalyst-equipped which are included in a manufacturer's catalyst control program for which approval has been given by the Administrator: ''CATALYST—APPROVED FOR IMPORT'';

(C) For all vehicles certified as catalyst-equipped which are not included in a manufacturer's catalyst control program for which prior approval has been given by the Administrator: ''CATALYST''.

(2) In lieu of selecting either of the labeling options of paragraph (c)(1) of this section, the manufacturer may add the information required by paragraph (c)(1)(iii) of this section to the label required by paragraph (a) of this section. The required information will be set forth in the manner prescribed by paragraph (c)(1)(iii) of this section.

(d) Incomplete light-duty trucks or incomplete heavy-duty vehicles optionally certified in accordance with the light-duty truck provisions shall have one of the following prominent statements, as applicable, printed on the label required by paragraph (a)(2) of

this section in lieu of the statement required by paragraph (a)(2)(iii)(E) of this section.

(1) *Light-duty trucks*. The statement, ''This vehicle conforms to U.S. EPA regulations applicable to 19XX Model Year New Light-Duty Trucks when it does not exceed XX pounds in curb weight, XX pounds in gross vehicle weight rating, and XX square feet in frontal area.''

(2) *Heavy-duty vehicles optionally certified in accordance with the light-duty truck provisions*. ''This heavy-duty vehicle conforms to the U.S. EPA regulations applicable to 19XX Model Year Light-Duty Trucks under the special provision of 40 CFR 86.085–1(b) when it does not exceed XXX pounds in curb weight, XXX pounds in gross vehicle weight rating, and XXX square feet in frontal area.''

(e) Incomplete heavy-duty vehicles having a gross vehicle weight rating of 8,500 pounds or less shall have one of the following statements printed on the label required by paragraph (a)(3) of this section in lieu of the statement required by paragraph (a)(3)(iii)(H) of this section: ''This engine conforms to U.S. EPA regulations applicable to 19XX Model Year Heavy-Duty Engines when installed in a vehicle completed at a curb weight of more than 6,000 pounds or with a frontal area of greater than 45 square feet.''

(f) The manufacturer of any incomplete light-duty vehicle or light-duty truck shall notify the purchaser of such vehicle of any curb weight, frontal area, or gross vehicle weight rating limitations affecting the emission certificate applicable to that vehicle. This notification shall be transmitted in a manner consistent with National Highway Traffic Safety Administration safety notification requirements published in 49 CFR part 568.

(g) *Incomplete vehicle fuel tank capacity*. (1) Incomplete heavy-duty vehicles employing a fuel or fuels which are nominally liquid at normal atmospheric pressure and temperature for which evaporative emission standards exist shall have the following prominent statement printed on the label required in paragraph (a)(4) of this section: ''Manufacturer's corporate name) has determined that this vehicle conforms to U.S. EPA regulations applicable to 19XX Model Year New XXX-Fueled Heavy-Duty Vehicles when completed with a nominal fuel tank capacity not to exceed XXX gallons. Persons wishing to add fuel tank capacity beyond the above maximum must submit a written statement to the Administrator that the hydrocarbon storage system has been upgraded according to the requirements of 40 CFR 86.095–35(g)(2).''

(2) Persons wishing to add fuel tank capacity beyond the maximum specified on the label required in paragraph (g)(1) of this section shall:

(i) Increase the amount of fuel tank vapor storage material according to the following function:

$$\mathrm{Cap}_f = \mathrm{Cap}_i\left(\frac{\text{T. Vol.}}{\text{Max. Vol.}}\right)$$

Where:

Cap_f=final amount of fuel tank vapor storage material, grams.

Cap_i=initial amount of fuel tank vapor storage material, grams.

T. Vol.=total fuel tank volume of completed vehicle, gallons.

Max. Vol. = maximum fuel tank volume as specified on the label required in paragraph (g)(1) of this section, gallons.

(ii) Use, if applicable, hosing for fuel vapor routing which is at least as impermeable to hydrocarbon vapors as that used by the primary manufacturer.

(iii) Use vapor storage material with the same absorptive characteristics as that used by the primary manufacturer.

(iv) Connect, if applicable, any new hydrocarbon storage device to the existing hydrocarbon storage device in series such that the original hydrocarbon storage device is situated between the fuel tank and the new hydrocarbon storage device. The original hydrocarbon storage device shall be sealed such that vapors cannot reach the atmosphere. The elevation of the original hydrocarbon storage device shall be equal to or lower than the new hydrocarbon storage device.

(v) Submit a written statement to the Administrator that paragraphs (g)(2)(i) through (g)(2)(iv) of this section have been complied with.

(3) If applicable, the Administrator will send a return letter verifying the receipt of the written statement required in paragraph (g)(2)(v) of this section.

(h) *Notification of nonconformance penalty.* (1) Light-duty trucks and heavy-duty vehicles and engines for which nonconformance penalties are to be paid in accordance with § 86.1113–87(b) shall have the following information printed on the label required in paragraph (a) of this section. The manufacturer shall begin labeling production engines or vehicles within 10 days after the completion of the PCA. This statement shall read: ''The manufacturer of this engine/vehicle will pay a nonconformance penalty to be allowed to introduce it into commerce at an emission level higher than the applicable emission standard. The compliance level (or new emission standard) for this engine/vehicle is XXX.'' (The manufacturer shall insert the applicable pollutant and compliance level calculated in accordance with § 86.1112–87(a).)

(2) If a manufacturer introduces an engine or vehicle into commerce prior to the compliance level determination of § 86.1112–87(a), it shall provide the engine or vehicle owner with a label as described above to be affixed in a location in proximity to the label required in paragraph (a) of this section within 30 days of the completion of the PCA.

(i) All light-duty vehicles and light-duty trucks shall comply with SAE Recommended Practices J1877 July 1994, ''Recommended Practice for Bar-Coded Vehicle Identification Number Label,'' and J1892 October 1993, ''Recommended Practice for Bar-Coded Vehicle Emission Configuration Label.'' SAE J1877 and J1892 are incorporated by reference. This incorporation by reference was approved by the Director of the Federal Register in accordance with 5 U.S.C. 552(a) and 1 CFR Part 51. Copies may be obtained from the Society of Automotive Engineers, Inc., 400 Commonwealth Drive, Warrendale, PA 15096–0001. Copies may be inspected at Docket No. A–90–35 at EPA's Air Docket (LE–131), Room 1500M, 1st Floor, Waterside Mall, 401 M St., SW., Washington, DC, or at the National Archives and Records Administration (NARA). For information on the availability of this material at NARA, call 202–741–6030, or go to: *http://www.archives.gov/federal_register/code_of_federal_regulations/ibr_locations.html.*

[56 FR 25755, June 5, 1991, as amended at 57 FR 31913, July 17, 1992; 58 FR 4037, Jan. 12, 1993; 58 FR 9487, Feb. 19, 1993; 58 FR 15799, Mar. 24, 1993; 58 FR 16020, Mar. 24, 1993; 58 FR 33209, June 16, 1993; 58 FR 34536, June 28, 1993; 59 FR 48499, Sept. 21, 1994; 63 FR 70694, Dec. 22, 1998; 70 FR 40433, July 13, 2005]

§ 86.096–2 Definitions.

The definitions listed in this section apply beginning with the 1996 model year. The definitions of § 86.094–2 continue to apply to 1996 and later model year vehicles.

Certification Short Test means the test, for gasoline-fueled Otto-cycle light-duty vehicles and light-duty trucks, performed in accordance with the procedures contained in 40 CFR part 86 subpart O.

Diurnal breathing losses means diurnal emissions.

Diurnal emissions means evaporative emissions resulting from the daily cycling of ambient temperatures.

Hot soak emissions means evaporative emissions after termination of engine operation.

Hot-soak losses means hot soak emissions.

Resting losses means evaporative emissions that may occur continuously, that are not diurnal emissions, hot soak emissions, running losses, or spitback emissions.

Running losses means evaporative emissions that occur during vehicle operation.

Spitback emissions means evaporative emissions resulting from the loss of liquid fuel that is emitted from a vehicle during a fueling operation.

Useful life means:

(1) For light-duty vehicles, and for light light-duty trucks not subject to the Tier 0 standards of § 86.094–9(a), intermediate useful life and/or full useful life. Intermediate useful life is a period of use of 5 years or 50,000 miles, whichever occurs first. Full useful life is a period of use of 10 years or 100,000 miles, whichever occurs first, except as otherwise noted in § 86.094–9. The useful

life of evaporative emission control systems on the portion of these vehicles subject to the evaporative emission test requirements of § 86.130–96 is defined as a period of use of 10 years or 100,000 miles, whichever occurs first.

(2) For light light-duty trucks subject to the Tier 0 standards of § 86.094–9(a), and for heavy light-duty truck engine families, intermediate and/or full useful life. Intermediate useful life is a period of use of 5 years or 50,000 miles, whichever occurs first. Full useful life is a period of use of 11 years or 120,000 miles, whichever occurs first. The useful life of evaporative emission control systems on the portion of these vehicles subject to the evaporative emission test requirements of § 86.130–96 is also defined as a period of 11 years or 120,000 miles, whichever occurs first.

(3) For an Otto-cycle heavy-duty engine family, a period of use of 8 years or 110,000 miles, whichever occurs first, except for the portion of evaporative emission control systems subject to the evaporative emission test requirements of § 86.1230–96, for which the applicable period of use is 10 years or 110,000 miles, whichever occurs first.

(4) For a diesel heavy-duty engine family:

(i) For light heavy-duty diesel engines, period of use of 8 years or 110,000 miles, whichever occurs first.

(ii) For medium heavy-duty diesel engines, a period of use of 8 years or 185,000 miles, whichever occurs first.

(iii) For heavy heavy-duty diesel engines, a period of use of 8 years or 290,000 miles, whichever occurs first, except as provided in paragraph (4)(iv) of this definition.

(iv) For heavy heavy-duty diesel engines used in urban buses, for the particulate standard, a period of use of 10 years or 290,000 miles, whichever occurs first.

(5) As an option for both light-duty trucks under certain conditions and heavy-duty engine families, an alternative useful life period assigned by the Administrator under the provisions of § 86.094–21(f).

(6) The useful-life period for purposes of the emissions defect warranty and emissions performance warranty shall be a period of 5 years/50,000 miles, whichever occurs first, for light-duty trucks, Otto-cycle heavy-duty engines and light heavy-duty diesel engines. For all other heavy-duty diesel engines the aforementioned period is 5 years/100,000 miles, whichever occurs first. However, in no case may this period be less than the manufacturer's basic mechanical warranty period for the engine family.

[58 FR 16020, Mar. 24, 1993, as amended at 58 FR 58417, Nov. 1, 1993]

§ 86.096–3 Abbreviations.

(a) The abbreviations in § 86.094–3 continue to apply. The abbreviation in this section applies beginning with the 1996 model year.

(b) The abbreviation in this section applies to this subpart and to subpart O of this part, and has the following meaning:

CST—Certification Short Test

[58 FR 58417, Nov. 1, 1993]

§ 86.096–7 Maintenance of records; submittal of information; right of entry.

Section 86.096–7 includes text that specifies requirements that differ from those specified in §§ 86.091–7 and 86.094–7. Where a paragraph in § 86.091–7 or § 86.094–7 is identical and applicable to § 86.096–7, this may be indicated by specifying the corresponding paragraph and the statement ''[Reserved]. For guidance see § 86.091–7.'' or ''[Reserved]. For guidance see § 86.094–7.''

(a) Introductory text through (a)(2) [Reserved]. For guidance see § 86.091–7.

(a)(3)—(h)(5) [Reserved]. For guidance see § 86.094–7.

(h)(6) *Voiding a certificate.* (i) EPA may void *ab initio* a certificate for a vehicle certified to Tier 0 certification standards or to the respective evaporative test procedure and accompanying evaporative standards as set forth or otherwise referenced in § 86.090–8, § 86.090–9, § 86.091–10 or § 86.094–11 for which the manufacturer fails to retain the records required in this section or to provide such information to the Administrator upon request.

(ii) EPA may void ab initio a certificate for a 1994 or 1995 model year light-duty vehicle or light-duty truck that is not certified in compliance with the cold temperature CO standard for

which the manufacturer fails to retain the records required in this section or to provide such information to the Administrator upon request.

(iii) Any voiding ab initio of a certificate under § 86.091–7(c)(6) and paragraph (h)(6) of this section will be made only after the manufacturer concerned has been offered an opportunity for a hearing conducted in accordance with § 86.614 for light-duty vehicles or under § 86.1014 for light-duty trucks and heavy-duty engines.

(7) The manufacturer (or contractor for the manufacturer, if applicable) of any new model 1996 through 1998 light-duty vehicle, light-duty truck or heavy-duty vehicle that is certified shall establish, maintain and retain the following adequately organized and indexed records for each such vehicle:

(i) EPA engine family;

(ii) Vehicle identification number;

(iii) Model year and production date;

(iv) Shipment date;

(v) Purchaser;

(vi) Purchase contract; and

(vii) EPA evaporative family.

[58 FR 16021, Mar. 24, 1993, as amended at 58 FR 34535, June 28, 1993]

§ 86.096–8 Emission standards for 1996 and later model year light-duty vehicles.

(a)(1) *Standards.* (i) Exhaust emissions from 1996 and later model year light-duty vehicles (optional for 1996 model year natural gas-fueled and liquefied petroleum gas-fueled light-duty vehicles) shall meet all standards in Tables A96–1 and A96–2 in the rows designated with the applicable fuel type. Light-duty vehicles shall not exceed the applicable standards in table A96–1 and shall not exceed the applicable standards in table A96–2.

TABLE A96–1—INTERMEDIATE USEFUL LIFE STANDARDS (G/MI) FOR LIGHT-DUTY VEHICLES

Fuel	THC	NMHC	THCE	NMHCE	CO	NO_X	PM
Gasoline	0.41	0.25	.....	.....	3.4	0.4	0.08
Diesel	0.41	0.25	.....	.....	3.4	1.0	0.08
Methanol	.....	.....	0.41	0.25	3.4	0.4	0.08
Natural Gas	.....	0.25	.....	.....	3.4	0.4	0.08
LPG	0.41	0.25	.....	.....	3.4	0.4	0.08

TABLE A96–2—FULL USEFUL LIFE STANDARDS (G/MI) FOR LIGHT-DUTY VEHICLES

Fuel	THC	NMHC	THCE	NMHCE	CO	NO_X	PM
Gasoline	.....	0.31	.....	.....	4.2	0.6	0.10
Diesel	.....	0.31	.....	.....	4.2	1.25	0.10
Methanol	.....	.....	.....	0.31	4.2	0.6	0.10
Natural Gas	.....	0.31	.....	.....	4.2	0.6	0.10
LPG	.....	0.31	.....	.....	4.2	0.6	0.10

(ii)(A) Vehicles subject to the standards of paragraph (a)(1)(i) of this section shall be all actual U.S. sales of light-duty vehicles of the applicable model year by a manufacturer.

(B) A manufacturer can not use one set of engine families to meet its intermediate useful life standards and another to meet its full useful life standards. The same families which are used to meet the intermediate useful life standards will be required without deviation to meet the corresponding full useful life standards.

(iii) CST emissions from gasoline-fueled Otto-cycle light-duty vehicles measured and calculated in accordance with subpart O of this part may not exceed the standards listed in paragraphs (a)(1)(iii) (A) and (B) of this section.

(A) Hydrocarbons: 100 ppm as hexane.

(B) Carbon monoxide: 0.5%.

(2) The standards set forth in paragraph (a)(1)(i) of this section refer to the exhaust emitted over a driving schedule as set forth in subpart B of this part and measured and calculated in accordance with those procedures. The test weight basis for light-duty vehicles, for the purposes of determining equivalent test weight as prescribed in § 86.129–94, shall be loaded vehicle weight.

(3) The standards set forth in paragraph (a)(1)(iii) of this section refer to the exhaust emitted during the CST as set forth in subpart O of this part and measured and calculated in accordance with those provisions.

(b) Evaporative emissions from light-duty vehicles shall not exceed the following standards. The standards apply equally to certification and in-use vehicles. The spitback standard also applies to newly assembled vehicles. For certification vehicles only, manufacturers may conduct testing to quantify a level of nonfuel background emissions for an individual test vehicle. Such a demonstration must include a description of the source(s) of emissions and an estimated decay rate. The demonstrated level of nonfuel background emissions may be subtracted from emission test results from certification vehicles if approved in advance by the Administrator.

(1) *Hydrocarbons (for gasoline-fueled, natural gas-fueled and liquefied petroleum gas-fueled vehicles).* (i)(A) For the full three-diurnal test sequence described in § 86.130–96, diurnal plus hot soak measurements: 2.0 grams per test.

(B) For the supplemental two-diurnal test sequence described in § 86.130–96, diurnal plus hot soak emissions (gasoline-fueled vehicles only): 2.5 grams per test.

(ii) *Running loss test (gasoline-fueled vehicles only):* 0.05 grams per mile.

(iii) *Fuel dispensing spitback test (gasoline-fueled vehicles only):* 1.0 grams per test.

(2) *Total Hydrocarbon Equivalent (for methanol-fueled vehicles).* (i)(A) For the full three-diurnal test sequence described in § 86.130–96, diurnal plus hot soak measurements: 2.0 grams carbon per test.

(B) For the supplemental two-diurnal test sequence described in § 86.130–96, diurnal plus hot soak measurements: 2.5 grams carbon per test.

(ii) *Running loss test:* 0.05 grams carbon per mile.

(iii) *Fuel dispensing spitback test:* 1.0 gram carbon per test.

(3) The standards set forth in paragraphs (b) (1) and (2) of this section refer to a composite sample of evaporative emissions collected under the conditions and measured in accordance with the procedures set forth in subpart B of this part.

(4) All fuel vapor generated in a gasoline- or methanol-fueled light-duty vehicle during in-use operations shall be routed exclusively to the evaporative control system (e.g., either canister or engine purge). The only exception to this requirement shall be for emergencies.

(5)(i) A minimum of the percentage shown in table A96–15 of a manufacturer's sales of the applicable model year's gasoline- and methanol-fueled light-duty vehicles shall be tested with the procedures in subpart B indicated for 1996 model year, and shall not exceed the standards described in paragraph (b) of this section. The remaining vehicles shall be tested with the procedures in subpart B of this part for 1995 model year light-duty vehicles and be subject to the standards described in § 86.090–8(b).

TABLE A96–15—IMPLEMENTATION SCHEDULE FOR LIGHT-DUTY VEHICLES FOR EVAPORATIVE EMISSION TESTING

Model year	Sales percentage
1996	20
1997	40
1998	90
1999 and following	100

(ii) Optionally, a minimum of the percentage shown in table A96–15 of a manufacturer's combined sales of the applicable model year's gasoline- and methanol-fueled light-duty vehicles, light-duty trucks, and heavy-duty vehicles shall not exceed the applicable standards.

(iii) Small volume manufacturers, as defined in § 86.092–14(b)(1) and (2), are exempt from the implementation schedule of table A96–15 of this section for model years 1996, 1997, and 1998. For small volume manufacturers, the standards of § 86.090–8(b), and the associated test procedures, continue to apply until model year 1999, when 100 percent compliance with the standards of this section is required. This exemption does not apply to small volume engine families as defined in § 86.092–14(b)(5).

(iv) For the 1996 model year, manufacturers may satisfy the testing requirements for federal certification to the evaporative standards of paragraph (b) of this section, except the fuel dispensing spitback test, by presenting test results from the certification procedures defined by the California Regulatory Requirements Applicable to the Evaporative Emissions Program (January 4, 1995). These requirements have been incorporated by reference (see § 86.1).

(c) No crankcase emissions shall be discharged into the ambient atmosphere from any 1996 and later model year Otto-cycle, or methanol-or gaseous-fueled diesel light-duty vehicle. This requirement is optional for 1996 model year gaseous-fueled light-duty vehicles.

(d)–(f) [Reserved]

(g) Any 1994 and later model year light-duty vehicle that a manufacturer wishes to certify for sale shall meet the emission standards under both low- and high-altitude conditions as specified in § 86.082–2, except as provided in paragraphs (h) and (i) of this section. Vehicles shall meet emission standards under both low- and high-altitude conditions without manual adjustments or modifications. Any emission control device used to meet emission standards under high-altitude conditions shall initially actuate (automatically) no higher than 4,000 feet above sea level.

(h) The manufacturer may exempt 1994 and later model year vehicles from compliance at high altitude with the emission standards set forth in paragraphs (a) and (b) of this section if the vehicles are not intended for sale at high altitude and if the requirements of paragraphs (h) (1) and (2) of this section are met.

(1) A vehicle configuration shall only be considered eligible for exemption under paragraph (h) of this section if the requirements of either paragraph (h)(1) (i), (ii), (iii), or (iv) of this section are met.

(i) Its design parameters (displacement-to-weight ratio (D/W) and engine speed-to-vehicle-speed ratio (N/V)) fall within the exempted range for that manufacturer for that year. The exempted range is determined according to the following procedure:

(A) The manufacturer shall graphically display the D/W and N/V data of all vehicle configurations it will offer for the model year in question. The axis of the abscissa shall be D/W (where (D) is the engine displacement expressed in cubic centimeters and (W) is the equivalent vehicle test weight expressed in pounds), and the axis of the ordinate shall be N/V (where (N) is the crankshaft speed expressed in revolutions per minute and (V) is the vehicle speed expressed in miles per hour). At the manufacturer's option, either the 1:1 transmission gear ratio or the lowest numerical gear ratio available in the transmission will be used to determine N/V. The gear selection must be the same for all N/V data points on the manufacturer's graph. For each transmission/axle ratio combination, only the lowest N/V value shall be used in the graphical display.

(B) The product line is then defined by the equation, $N/V=C(D/W)^{-0.9}$, where the constant, C, is determined by the requirement that all the vehicle data points either fall on the line or lie to the upper right of the line as displayed on the graphs.

(C) The exemption line is then defined by the equation, $N/V=C(0.84\ D/W)^{-0.9}$, where the constant, C is the same as that found in paragraph (h)(1)(i)(B) of this section.

(D) The exempted range includes all values of N/V and D/W which simultaneously fall to the lower left of the exemption line as drawn on the graph.

(ii) Its design parameters fall within the alternate exempted range for that manufacturer that year. The alternate exempted range is determined by substituting rated horsepower (hp) for displacement (D) in the exemption procedure described in paragraph (h)(1)(i) of this section and by using the product line $N/V=C(hp/W)^{-0.9}$.

(A) Rated horsepower shall be determined by using the Society of Automotive Engineers Test Procedure J 1349, June 1990, Engine Power Test Code—Spark Ignition and Compression Ignition—Net Power Rating. This incorporation by reference was approved by the Director of the Federal Register in accordance with 5 U.S.C. 552(a) and 1 CFR part 51. Copies may be obtained

from SAE International, 400 Commonwealth Drive, Warrendale, PA, 15096–0001. Copies may be inspected at U.S. EPA, OAR, 401 M St., SW., Washington, DC 20460, or at the National Archives and Records Administration (NARA). For information on the availability of this material at NARA, call 202–741–6030, or go to: *http://www.archives.gov/federal_register/code_of_federal_regulations/ibr_locations.html*. Any of the horsepower determinants within that test procedure may be used, as long as it is used consistently throughout the manufacturer's product line in any model year.

(B) No exemptions will be allowed under paragraph (h)(1)(ii) of this section to any manufacturer that has exempted vehicle configurations as set forth in paragraph (h)(1)(i) of this section.

(iii) Its acceleration time (the time it takes a vehicle to accelerate from 0 miles per hour to a speed not less than 40 miles per hour and not greater than 50 miles per hour) under high-altitude conditions is greater than the largest acceleration time under low-altitude conditions for that manufacturer for that year. The procedure to be followed in making this determination is:

(A) The manufacturer shall list the vehicle configuration and acceleration time under low-altitude conditions of that vehicle configuration which has the highest acceleration time under low-altitude conditions of all the vehicle configurations it will offer for the model year in question. The manufacturer shall also submit a description of the methodology used to make this determination.

(B) The manufacturer shall then list the vehicle configurations and acceleration times under high-altitude conditions of all those vehicle configurations which have higher acceleration times under high-altitude conditions than the highest acceleration time at low altitude identified in paragraph (h)(1)(iii)(A) of this section.

(iv) In lieu of performing the test procedure of paragraphs (h)(1)(iii) (A) and (B) of this section, its acceleration time can be estimated based on the manufacturer's engineering evaluation, in accordance with good engineering practice, to meet the exemption criteria of paragraph (h)(1)(iii) of this section.

(2) A vehicle shall only be considered eligible for exemption under this paragraph if at least one configuration of its model type (and transmission configuration in the case of vehicles equipped with manual transmissions, excluding differences due to the presence of overdrive) is certified to meet emission standards under high-altitude conditions as specified in paragraphs (a) through (c) and paragraph (g) of this section. The Certificate of Conformity (the Certificate) covering any exempted configuration(s) will also apply to the corresponding non-exempt configuration(s) required under this paragraph (h)(2). As a condition to the exemption, any suspension, revocation, voiding, or withdrawal of the Certificate as it applies to a non-exempt configuration for any reason will result in a suspension of the Certificate as it applies to the corresponding exempted configuration(s) of that model type, unless there is at least one other corresponding non-exempt configuration of the same model type still covered by the Certificate. The suspension of the Certificate as it applies to the exempted configuration(s) will be terminated when any one of the following occurs:

(i) Another corresponding non-exempt configuration(s) receive(s) coverage under the Certificate; or

(ii) Suspension of the Certificate as it applies to the corresponding non-exempt configuration(s) is terminated; or

(iii) The Agency's action(s), with respect to suspension, revocation, voiding, or withdrawal of the Certificate as it applies to the corresponding non-exempt configuration(s), is reversed.

(3) The sale of a vehicle for principal use at a designated high-altitude location that has been exempted as set forth in paragraph (h) of this section will be considered a violation of section 203(a)(1) of the Clean Air Act.

(i)(1) The manufacturers may exempt 1996 and later model year vehicles from compliance at low altitude with the emission standards set forth in paragraph (a) of this section and § 86.090–8(b) if the vehicles:

(i) Are not intended for sale at low altitude; and

(ii) Are equipped with a unique, high-altitude axle ratio (rear-wheel drive vehicles) or a unique, high-altitude drivetrain (front-wheel drive vehicles) with a higher N/V ratio than other configurations of that model type which are certified in compliance with the emission standards of paragraph (a) of this section and § 86.090–8(b) under low-altitude conditions.

(2) The sale of a vehicle for principal use at low altitude that has been exempted as set forth in paragraph (i)(1) of this section will be considered a violation of section 203(a)(1) of the Clean Air Act.

(j) Any exempted light-duty vehicle that a manufacturer wishes to certify for sale under the provisions of § 86.090–8 (h) or paragraph (i) of this section is subject to the provisions of subpart Q of this part.

(k) *Cold Temperature Carbon Monoxide (CO) Standards—Light-Duty Vehicles.* Exhaust emissions from 1996 and later model year gasoline-fueled light-duty vehicles shall not exceed the cold temperature CO standard of 10.0 grams per mile for an intermediate useful life of 50,000 miles, as measured and calculated under the provisions set forth in subpart C of this part. This standard applies under both low and high altitude conditions.

[56 FR 25756, June 5, 1991, as amended at 57 FR 31915, July 17, 1992; 58 FR 16021, Mar. 24, 1993; 58 FR 34536, June 28, 1993; 58 FR 58417, Nov. 1, 1993; 59 FR 48499, Sept. 21, 1994; 60 FR 43887, Aug. 23, 1995; 62 FR 47120, Sept. 5, 1997]

§ 86.096–9 Emission standards for 1996 and later model year light-duty trucks.

Section 86.096–9 includes text that specifies requirements that differ from § 86.094–9. Where a paragraph in § 86.094–9 is identical and applicable to § 86.096–9, this may be indicated by specifying the corresponding paragraph and the statement ''[Reserved]. For guidance see § 86.094–9.''

(a)(1) introductory text through (a)(1)(iv) [Reserved]. For guidance see § 86.094–9.

(v) CST emissions from gasoline-fueled Otto-cycle light-duty trucks measured and calculated in accordance with subpart O of this part may not exceed the standards listed in paragraphs (a)(1)(v) (A) and (B) of this section.

(A) Hydrocarbons: 100 ppm as hexane.

(B) Carbon monoxide: 0.5%.

(a)(2) [Reserved]

(3) The standards set forth in paragraph (a)(1)(v) of this section refer to the exhaust emitted during the CST as set forth in subpart O of this part and measured and calculated in accordance with those provisions.

(b) Evaporative emissions from light-duty trucks shall not exceed the following standards. The standards apply equally to certification and in-use vehicles. The spitback standard also applies to newly assembled vehicles. For certification vehicles only, manufacturers may conduct testing to quantify a level of nonfuel background emissions for an individual test vehicle. Such a demonstration must include a description of the source(s) of emissions and an estimated decay rate. The demonstrated level of nonfuel background emissions may be subtracted from emission test results from certification vehicles if approved in advance by the Administrator.

(1) *Hydrocarbons (for gasoline-fueled, natural gas-fueled and liquefied petroleum gas-fueled vehicles).* (i)(A) For gasoline-fueled heavy light-duty trucks with a nominal fuel tank capacity of at least 30 gallons:

(*1*) For the full three-diurnal test sequence described in § 86.130–96, diurnal plus hot soak measurements: 2.5 grams per test.

(*2*) For the supplemental two-diurnal test sequence described in § 86.130–96, diurnal plus hot soak measurements: 3.0 grams per test.

(B) For all other light-duty trucks:

(*1*) For the full three-diurnal test sequence described in § 86.130–96, diurnal plus hot soak measurements: 2.0 grams per test.

(*2*) For the supplemental two-diurnal test sequence described in § 86.130–96, diurnal plus hot soak measurements (gasoline-fueled vehicles only): 2.5 grams per test.

(ii) *Running loss test (gasoline-fueled vehicles only):* 0.05 grams per mile.

(iii) *Fuel dispensing spitback test (gasoline-fueled vehicles only):* 1.0 grams per test.

(2) *Total Hydrocarbon Equivalent (for methanol-fueled vehicles).* (i)(A) For heavy light-duty trucks with nominal fuel tank capacity of at least 30 gallons:

(*1*) For the full three-diurnal test sequence described in § 86.130–96, diurnal plus hot soak measurements: 2.5 grams carbon per test.

(*2*) For the supplemental two-diurnal test sequence described in § 86.130–96, diurnal plus hot soak measurements: 3.0 grams carbon per test.

(B) For all other light-duty trucks:

(*1*) For the full three-diurnal test sequence described in § 86.130–96, diurnal plus hot soak measurements: 2.0 grams carbon per test.

(*2*) For the supplemental two-diurnal test sequence described in § 86.130–96, diurnal plus hot soak measurements: 2.5 grams carbon per test.

(ii) *Running loss test:* 0.05 grams carbon per mile.

(iii) *Fuel dispensing spitback test:* 1.0 gram carbon per test.

(3) The standards set forth in paragraphs (b) (1) and (2) of this section refer to a composite sample of evaporative emissions collected under the conditions and measured in accordance with the procedures set forth in subpart B of this part.

(4) All fuel vapor generated in a gasoline- or methanol-fueled light-duty truck during in-use operations shall be routed exclusively to the evaporative control system (e.g., either canister or engine purge). The only exception to this requirement shall be for emergencies.

(5)(i) A minimum of the percentage shown in table A96–16 of a manufacturer's sales of the applicable model year's gasoline- and methanol-fueled light-duty trucks shall be tested with the procedures in subpart B of this part indicated for the 1996 model year, and shall not exceed the standards described in paragraph (b) of this section. The remaining vehicles shall be tested with the procedures in subpart B of this part for 1995 model year light-duty trucks and be subject to the standards described in § 86.090–9(b).

TABLE A96–16—IMPLEMENTATION SCHEDULE FOR LIGHT-DUTY TRUCKS FOR EVAPORATIVE EMISSION TESTING

Model year	Sales percentage
1996	20
1997	40
1998	90
1999 and following	100

(ii) Optionally, a minimum of the percentage shown in table A96–16 of a manufacturer's combined sales of the applicable model year's gasoline- and methanol-fueled light-duty vehicles, light-duty trucks, and heavy-duty vehicles shall not exceed the applicable standards.

(iii) Small volume manufacturers, as defined in § 86.092–14(b)(1) and (2), are exempt from the implementation schedule of table A96–16 of this section for model years 1996, 1997, and 1998. For small volume manufacturers, the standards of § 86.090–9(b), and the associated test procedures, continue to apply until model year 1999, when 100 percent compliance with the standards of this section is required. This exemption does not apply to small volume engine families as defined in § 86.092–14(b)(5).

(iv) For the 1996 model year, manufacturers may satisfy the testing requirements for federal certification to the evaporative standards of paragraph (b) of this section, except the fuel dispensing spitback test, by presenting test results from the certification procedures defined by the California Regulatory Requirements Applicable to the Evaporative Emissions Program (January 4, 1995). These requirements have been incorporated by reference (see § 86.1).

(c) [Reserved]. For guidance see § 86.094–9.

(d)–(f) [Reserved]

(g)–(k) [Reserved]. For guidance see § 86.094–9.

[58 FR 16021, Mar. 24, 1993, as amended at 58 FR 58417, Nov. 1, 1993; 59 FR 48500, Sept. 21, 1994; 60 FR 43887, Aug. 23, 1995]

§ 86.096–10 Emission standards for 1996 and later model year Otto-cycle heavy-duty engines and vehicles.

Section 86.096–10 includes text that specifies requirements that differ from § 86.091–10. Where a paragraph in § 86.091–10 is identical and applicable to § 86.096–10, this may be indicated by specifying the corresponding paragraph and the statement ''[Reserved]. For guidance see § 86.091–10.''

(a) [Reserved]. For guidance see § 86.091–10.

(b) Evaporative emissions from heavy-duty vehicles shall not exceed the following standards. The standards apply equally to certification and in-use vehicles. The spitback standard also applies to newly assembled vehicles. For certification vehicles only, manufacturers may conduct testing to quantify a level of nonfuel background emissions for an individual test vehicle. Such a demonstration must include a description of the source(s) of emissions and an estimated decay rate. The demonstrated level of nonfuel background emissions may be subtracted from emission test results from certification vehicles if approved in advance by the Administrator.

(1) *Hydrocarbons (for vehicles equipped with gasoline-fueled, natural gas-fueled or liquefied petroleum gas-fueled engines).* (i) For vehicles with a Gross Vehicle Weight Rating of up to 14,000 lbs:

(A)(*1*) For the full three-diurnal test sequence described in § 86.1230–96, diurnal plus hot soak measurements: 3.0 grams per test.

(*2*) For the supplemental two-diurnal test sequence described in § 86.1230–96, diurnal plus hot soak measurements (gasoline-fueled vehicles only): 3.5 grams per test.

(B) Running loss test (gasoline-fueled vehicles only): 0.05 grams per mile.

(C) Fuel dispensing spitback test (gasoline-fueled vehicles only): 1.0 gram per test.

(ii) For vehicles with a Gross Vehicle Weight Rating of greater than 14,000 lbs:

(A)(*1*) For the full three-diurnal test sequence described in § 86.1230–96, diurnal plus hot soak measurements: 4.0 grams per test.

(*2*) For the supplemental two-diurnal test sequence described in § 86.1230–96, diurnal plus hot soak measurements (gasoline-fueled vehicles only): 4.5 grams per test.

(B) Running loss test (gasoline-fueled vehicles only): 0.05 grams per mile.

(2) Total Hydrocarbon Equivalent (for vehicles equipped with methanol-fueled engines). (i) For vehicles with a Gross Vehicle Weight Rating of up to 14,000 lbs:

(A)(*1*) For the full three-diurnal test sequence described in § 86.1230–96, diurnal plus hot soak measurements: 3.0 grams carbon per test.

(*2*) For the supplemental two-diurnal test sequence described in § 86.1230–96, diurnal plus hot soak measurements: 3.5 grams carbon per test.

(B) Running loss test: 0.05 grams carbon per mile.

(C) Fuel dispensing spitback test: 1.0 gram carbon per test.

(ii) For vehicles with a Gross Vehicle Weight Rating of greater than 14,000 lbs:

(A)(*1*) For the full three-diurnal test sequence described in § 86.1230–96, diurnal plus hot soak measurements: 4.0 grams carbon per test.

(*2*) For the supplemental two-diurnal test sequence described in § 86.1230–96, diurnal plus hot soak measurements: 4.5 grams carbon per test.

(B) Running loss test: 0.05 grams carbon per mile.

(3)(i) For vehicles with a Gross Vehicle Weight Rating of up to 26,000 lbs, the standards set forth in paragraphs (b)(1) and (b)(2) of this section refer to a composite sample of evaporative emissions collected under the conditions and measured in accordance with the procedures set forth in subpart M of this part.

(ii) For vehicles with a Gross Vehicle Weight Rating of greater than 26,000 lbs., the standards set forth in paragraphs (b)(1)(ii) and (b)(2)(ii) of this section refer to the manufacturer's engineering design evaluation using good engineering practice (a statement of which is required in § 86.091–23(b)(4)(ii)).

(4) All fuel vapor generated in a gasoline- or methanol-fueled heavyduty vehicle during in-use operations shall be routed exclusively to the evaporative control system (e.g.,

either canister or engine purge). The only exception to this requirement shall be for emergencies.

(5)(i) A minimum of the percentage shown in table A96–17 of a manufacturer's sales of the applicable model year's gasoline- and methanol-fueled heavy-duty vehicles shall not exceed the standards described in paragraph (b) of this section, except that methanol-fueled heavy-duty vehicles are exempt for the 1996 and 1997 model years. The remaining vehicles shall be subject to the standards described in § 86.091–10(b).

TABLE A96–17—IMPLEMENTATION SCHEDULE FOR HEAVY-DUTY VEHICLES FOR EVAPORATIVE EMISSION TESTING

Model year	Sales percentage
1996	20
1997	40
1998	90
1999 and following	100

(ii) Optionally, a minimum of the percentage shown in table A96–17 of a manufacturer's combined sales of the applicable model year's gasoline- and methanol-fueled light-duty vehicles, light-duty trucks, and heavy-duty vehicles shall not exceed the applicable standards.

(iii) Small volume manufacturers, as defined in § 86.092–14(b)(1) and (2), are exempt from the implementation schedule of table A96–17 of this section for model years 1996, 1997, and 1998. For small volume manufacturers, the standards of § 86.091–10(b), and the associated test procedures, continue to apply until model year 1999, when 100 percent compliance with the standards of this section is required. This exemption does not apply to small volume engine families as defined in § 86.092–14(b)(5).

(iv) For the 1996 model year, manufacturers may satisfy the testing requirements for federal certification to the evaporative standards of paragraph (b) of this section, except the fuel dispensing spitback test, by presenting test results from the certification procedures defined by the California Regulatory Requirements Applicable to the Evaporative Emissions Program (January 4, 1995). These requirements have been incorporated by reference (see § 86.1).

(c)–(d) [Reserved]. For guidance see § 86.091–10.

[58 FR 16022, Mar. 24, 1993, as amended at 59 FR 48500, Sept. 21, 1994; 60 FR 43887, Aug. 23, 1995]

§ 86.096–11 Emission standards for 1996 and later model year diesel heavy-duty engines and vehicles.

(a) Exhaust emissions from new 1996 and later model year diesel heavy-duty engines shall not exceed the following (optional for 1996 model year gaseous-fueled diesel heavy-duty engines):

(1)(i) *Hydrocarbons (for diesel engines fueled with either petroleum-fuel or liquefied petroleum gas).* 1.3 grams per brake horsepower-hour (0.48 gram per megajoule), as measured under transient operating conditions.

(ii) *Total Hydrocarbon Equivalent (for methanol-fueled diesel engines).* 1.3 grams per brake horsepower-hour (0.48 gram per megajoule), as measured under transient operating conditions.

(iii) *Nonmethane hydrocarbons (for natural gas-fueled diesel engines).* 1.2 grams per brake horsepower-hour (0.45 gram per megajoule), as measured under transient operating conditions.

(2) *Carbon monoxide.* (i) 15.5 grams per brake horsepower-hour (5.77 grams per megajoule), as measured under transient operating conditions.

(ii) 0.50 percent of exhaust gas flow at curb idle (methanol-, natural gas-, and liquefied petroleum gas-fueled diesel only).

(3) *Oxides of Nitrogen.* (i) 5.0 grams per brake horsepower-hour (1.9 grams per megajoule), as measured under transient operating conditions.

(ii) A manufacturer may elect to include any or all of its diesel heavy-duty engine families in any or all of the NO_X averaging, trading, or banking programs for heavy-duty engines, within the restrictions described in § 86.094–15. If the manufacturer elects to include engine families in any of these programs, the NO_X FELs may not exceed 6.0 grams per brake horsepower-hour (2.2 grams per megajoule). This ceiling value applies whether credits for the family are derived from averaging, trading or banking programs.

(4) *Particulate.* (i) For diesel engines to be used in urban buses, 0.05 gram per brake horsepower-hour (0.019 gram per megajoule) for certification testing and selective enforcement audit testing, and 0.07 gram per brake horsepower-hour (0.026 gram per megajoule) for in-use testing, as measured under transient operating conditions.

(ii) For all other diesel engines only, 0.10 gram per brake horsepower-hour (0.037 gram per megajoule), as measured under transient operating conditions.

(iii) A manufacturer may elect to include any or all of its diesel heavy-duty engine families in any or all of the particulate averaging, trading, or banking programs for heavy-duty engines, within the restrictions described in § 86.094–15. If the manufacturer elects to include engine families in any of these programs, the particulate FEL may not exceed:

(A) For engine families intended for use in urban buses, 0.25 gram per brake horsepower-hour (0.093 gram per megajoule).

(B) For engine families not intended for use in urban buses, 0.60 gram per brake horsepower-hour (0.22 gram per megajoule).

(C) The ceiling values in paragraphs (a)(4)(iii) (A) and (B) of this section apply whether credits for the family are derived from averaging, trading or banking programs.

(b)(1) The opacity of smoke emission from new 1996 and later model year diesel heavy-duty engine shall not exceed:

(i) 20 percent during the engine acceleration mode.

(ii) 15 percent during the engine lugging mode.

(iii) 50 percent during the peaks in either mode.

(2) The standards set forth in paragraph (b)(1) of this section refer to exhaust smoke emissions generated under the conditions set forth in subpart I of this part and measured and calculated in accordance with these procedures.

(3) *Evaporative emissions* (total of non-oxygenated hydrocarbons plus methanol) from 1996 and later model year heavy-duty vehicles equipped with methanol-fueled diesel engines shall not exceed:

(i) For vehicles with a Gross Vehicle Weight Rating of up to 14,000 lbs, 3.0 grams per test.

(ii) For vehicles with a Gross Vehicle Weight Rating of greater than 14,000 lbs, 4.0 grams per test.

(4) *Evaporative emissions* from 1996 and later model year heavy-duty vehicles equipped with natural gas-fueled or liquefied petroleum gas-fueled heavy-duty engines shall not exceed the following standards. The standards apply equally to certification and in-use vehicles.

(i) For vehicles with a Gross Vehicle Weight Rating of up to 14,000 pounds for the full three-diurnal test sequence described in § 86.1230–96, diurnal plus hot soak measurements: 3.0 grams per test.

(ii) For vehicles with a Gross Vehicle Weight Rating of greater than 14,000 pounds for the full three-diurnal test sequence described in § 86.1230–96, diurnal plus hot soak measurements: 4.0 grams per test.

(5)(i) For vehicles with a Gross Vehicle Weight Rating of up to 26,000 lbs, the standards set forth in paragraphs (b)(3) and (b)(4) of this section refer to a composite sample of evaporative emissions collected under the conditions and measured in accordance with the procedures set forth in subpart M of this part. For certification vehicles only, manufacturers may conduct testing to quantify a level of nonfuel background emissions for an individual test vehicle. Such a demonstration must include a description of the source(s) of emissions and an estimated decay rate. The demonstrated level of nonfuel background emissions may be subtracted from emission test results from certification vehicles if approved in advance by the Administrator.

(ii) For vehicles with a Gross Vehicle Weight Rating greater than 26,000 pounds, the standards set forth in paragraphs (b)(3)(ii) and (b)(4)(ii) of this section refer to the manufacturer's engineering design evaluation using good engineering practice (a statement of which is required in § 86.091–23(b)(4)(ii)).

(c) No crankcase emissions shall be discharged into the ambient atmosphere from any new 1996 or later model year methanol-or gaseous-fueled diesel, or any naturally aspirated diesel heavy-duty engine. For petroleum-

fueled engines only, this provision does not apply to engines using turbochargers, pumps, blowers, or superchargers for air induction. This provision is optional for all 1996 model year gaseous-fueled diesel heavy-duty engines, and for 1997 model year gaseous-fueled diesel heavy-duty engines using turbochargers, pumps, blowers or superchargers for air induction.

(d) Every manufacturer of new motor vehicle engines subject to the standards prescribed in this section shall, prior to taking any of the actions specified in section 203(a)(1) of the Act, test or cause to be tested motor vehicle engines in accordance with applicable procedures in subpart I or N of this part to ascertain that such test engines meet the requirements of paragraphs (a), (b), (c), and (d) of this section.

[58 FR 15799, Mar. 24, 1993, as amended at 59 FR 48500, Sept. 21, 1994; 60 FR 43887, Aug. 23, 1995; 62 FR 47120, Sept. 5, 1997]

§ 86.096–14 Small-volume manufacturer certification procedures.

Section 86.096–14 includes text that specifies requirements that differ from those specified in §§ 86.094–14 and 86.095–14. Where a paragraph in § 86.094–14 or § 86.095–14 is identical and applicable to § 86.096–14, this may be indicated by specifying the corresponding paragraph and the statement ''[Reserved]. For guidance see § 86.094–14'' or ''[Reserved]. For guidance see § 86.095–14.'' Where a corresponding paragraph of § 86.094–14 or § 86.095–14 is not applicable, this is indicated by the statement ''[Reserved].''

(a)–(c)(11)(ii)(B)(*15*) [Reserved]. For guidance see § 86.094–14.

(c)(11)(ii)(B)(*16*)–(c)(11)(ii)(B)(*18*) [Reserved]. For guidance see § 86.095–14.

(c)(11)(ii)(B)(*19*) For each light-duty vehicle, light-duty truck, or heavy-duty vehicle evaporative emission family, a description of any unique procedures required to perform evaporative emission tests (including canister working capacity, canister bed volume, and fuel temperature profile for the running loss test) for all vehicles in that evaporative emission family, and a description of the method used to develop those unique procedures.

(*20*) For each light-duty vehicle, light-duty truck, or heavy-duty vehicle evaporative emission family:

(*i*) Canister working capacity, according to the procedures specified in § 86.132–96(h)(1)(iv);

(*ii*) Canister bed volume; and

(*iii*) Fuel temperature profile for the running loss test, according to the procedures specified in § 86.129–94(d).

(c)(11)(ii)(C)–(c)(11)(ii)(D)(*5*) [Reserved]. For guidance see § 86.095–14.

(c)(11)(ii)(D)(*6*) [Reserved]

(c)(11)(ii)(D)(*7*)–(c)(15) [Reserved]. For guidance see § 86.094–14.

[58 FR 16023, Mar. 24, 1993]

§ 86.096–21 Application for certification.

Section 86.096–21 includes text that specifies requirements that differ from § 86.094–21. Where a paragraph in § 86.094–21 is identical and applicable to § 86.096–21, this may be indicated by specifying the corresponding paragraph and the statement ''[Reserved]. For guidance see § 86.094–21.''

(a)–(b)(8) [Reserved]. For guidance see § 86.094–21.

(b)(9) For each light-duty vehicle, light-duty truck, or heavy-duty vehicle evaporative emission family, a description of any unique procedures required to perform evaporative emission tests (including canister working capacity, canister bed volume, and fuel temperature profile for the running loss test) for all vehicles in that evaporative emission family, and a description of the method used to develop those unique procedures.

(10) For each light-duty vehicle, light-duty truck, or heavy-duty vehicle evaporative emission family:

(i) Canister working capacity, according to the procedures specified in § 86.132–96(h)(1)(iv);

(ii) Canister bed volume; and

(iii) Fuel temperature profile for the running loss test, according to the procedures specified in § 86.129–94(d).

(c)–(j) [Reserved]. For guidance see § 86.094–21.

(k) For light-duty vehicles and light-duty trucks, a manufacturer with an engine family that cannot be appropriately tested on all Certification

Short Test emission test procedures described in § 86.1439 of this part may request an exemption, as described in § 86.1427 (d), from the inappropriate test(s) for purposes of demonstrating compliance with the Certification Short Test as described in subpart O of this part.

(l) For light-duty vehicles and light-duty trucks, a manufacturer with an engine family that can be appropriately tested on none of the Certification Short Test emission test procedures described in § 86.1439 of this part may request an alternative procedure as described in § 86.1427 (d).

[58 FR 16023, Mar. 24, 1993, as amended at 58 FR 34536, June 28, 1993; 58 FR 58417, Nov. 1, 1993; 59 FR 33913, July 1, 1994; 60 FR 34335, June 30, 1995]

§ 86.096–23 Required data.

Section 86.096–23 includes text that specifies requirements that differ from those specified in § 86.095–23. Where a paragraph in § 86.095–23 is identical and applicable to § 86.096–23, this may be indicated by specifying the corresponding paragraph and the statement ''[Reserved]''. For guidance see § 86.095–23.

(a)–(l) [Reserved]. For guidance see § 86.095–23.

(m) Additionally, except for small-volume manufacturers, manufacturers certifying vehicles shall submit for each model year 1996 through 1998 light-duty vehicle, light-duty truck, and gasoline-fueled heavy-duty vehicle evaporative family:

(1) In the application for certification the projected sales volume of evaporative families certifying to the respective evaporative test procedure and accompanying standards as set forth or otherwise referenced in §§ 86.090–8, 86.090–9, and 86.091–10 or those set forth or otherwise referenced in §§ 86.096–8, 86.096–9, and 86.096–10. Volume projected to be produced for U.S. sale may be used in lieu of projected U.S. sales.

(2) End-of-year reports for each evaporative family.

(i) These end-of-year reports shall be submitted within 90 days of the end of the model year to: Director, Manufacturers Operations Division (6405J), U.S. Environmental Protection Agency, 1200 Pennsylvania Ave., NW., Washington, DC 20460.

(ii) These reports shall indicate the model year, evaporative family and the actual U.S. sales volume. The manufacturer may petition the Administrator to allow volume produced for U.S. sale to be used in lieu of U.S. sales. Such petition shall be submitted within 30 days of the end of the model year to the Manufacturers Operations Division. For the petition to be granted, the manufacturer must establish to the satisfaction of the Administrator that production volume is functionally equivalent to sales volume.

(iii) The U.S. sales volume for end-of-year reports shall be based on the location of the point of sale to a dealer, distributor, fleet operator, broker, or any other entity that comprises the point of first sale.

(iv) Failure by a manufacturer to submit the end-of-year report within the specified time may result in certificate(s) for the evaporative family(ies) certified to the certification standards set forth in §§ 86.090–8, 86.090–9, and 86.091–10 being voided ab initio plus any applicable civil penalties for failure to submit the required information to the Agency.

(v) The information shall be organized in such a way as to allow the Administrator to determine compliance with the Evaporative Emission Testing implementation schedules of §§ 86.096–8, 86.096–9, and 86.096–10.

[58 FR 16023, Mar. 24, 1993, as amended at 58 FR 66297, Dec. 20, 1993]

§ 86.096–24 Test vehicles and engines.

(a) *General.* This paragraph applies to the grouping of vehicles or engines into families.

(1) The vehicles or engines covered by an application for certification will be divided into groupings of engines which are expected to have similar emission characteristics throughout their useful life. Each group of engines with similar emission characteristics is defined as a separate engine family.

(2) To be classed in the same engine family, engines must be identical in all the respects listed in paragraphs (a)(2)(i) through (x) of this section.

(i) The cylinder bore center-to-center dimensions.

(ii)–(iii) [Reserved]

(iv) The cylinder block configuration (air-cooled or water-cooled: L–6, 90 deg., V–8, and so forth).

(v) The location of the intake and exhaust valves (or ports).

(vi) The method of air aspiration.

(vii) The combustion cycle.

(viii) Catalytic converter characteristics.

(ix) Thermal reactor characteristics.

(x) Type of air inlet cooler (for example, intercoolers and after-coolers) for diesel heavy-duty engines.

(3)(i) Engines identical in all the respects listed in paragraph (a)(2) of this section may be further divided into different engine families if the Administrator determines that they may be expected to have different emission characteristics. This determination will be based upon a consideration of the features of each engine listed in paragraphs (a)(3)(i) (A) through (G) of this section.

(A) The bore and stroke.

(B) The surface-to-volume ratio of the nominally dimensioned cylinder at the top dead center positions.

(C) The intake manifold induction port sizes and configuration.

(D) The exhaust manifold port size and configuration.

(E) The intake and exhaust valve sizes.

(F) The fuel system.

(G) The camshaft timing and ignition or injection timing characteristics.

(ii) Light-duty trucks and heavy-duty engines produced in different model years and distinguishable in the respects listed in paragraph (a)(2) of this section are treated as belonging to a single engine family if the Administrator requires it, after determining that the engines may be expected to have similar emission deterioration characteristics.

(4) Where engines are of a type which cannot be divided into engine families based upon the criteria listed in paragraphs (a)(2) and (3) of this section, the Administrator establishes families for those engines based upon those features most related to their emission characteristics. Engines that are eligible to be included in the same engine family based on the criteria in paragraphs (a)(2) and (a)(3)(i) of this section may be further divided into different engine families if the manufacturer determines that they may be expected to have different emission characteristics. This determination will be based upon a consideration of the features of each engine listed in paragraphs (a)(4) (i) through (iii) of this section.

(i) The dimension from the center line of the crankshaft to the center line of the camshaft.

(ii) The dimension from the center line of the crankshaft to the top of the cylinder block head face.

(iii) The size of the intake and exhaust valves (or ports).

(5) The gasoline-fueled and methanol-fueled light-duty vehicles and light-duty trucks covered by an application for certification will be divided into groupings which are expected to have similar evaporative emission characteristics throughout their useful life. Each group of vehicles with similar evaporative emission characteristics must be defined as a separate evaporative emission family.

(6) For gasoline-fueled or methanol-fueled light-duty vehicles and light-duty trucks to be classed in the same evaporative emission family, vehicles must be similar with respect to the items listed in paragraphs (a)(6) (i) through (iii) of this section.

(i) Type of vapor storage device (for example, canister, air cleaner, crankcase).

(ii) Basic canister design.

(iii) Fuel system.

(7) Where vehicles are of a type which cannot be divided into evaporative emission families based on the criteria listed in paragraph (a)(2) of this section, the Administrator establishes families for those vehicles based upon the features most related to their evaporative emission characteristics.

(8)(i) If the manufacturer elects to participate in the Production AMA Durability Program, the engine families covered by an application for certification must be grouped based upon similar engine design and emission control system characteristics. Each of these groups constitute a separate engine family group.

(ii) To be classed in the same engine family group, engine families must contain engines identical in all of the

respects listed in paragraphs (a)(8)(ii) (A) through (D) of this section.

(A) The combustion cycle.

(B) The cylinder block configuration (air-cooled or water-cooled: L–6, V–8, rotary, etc.).

(C) Displacement (engines of different displacement within 50 cubic inches or 15 percent of the largest displacement and contained within a multidisplacement engine family will be included in the same engine family group).

(D) Catalytic converter usage and basic type (non-catalyst, oxidation catalyst only, three-way catalyst equipped).

(9) Engine families identical in all respects listed in paragraph (a)(8) of this section may be further divided into different engine family groups if the Administrator determines that they are expected to have significantly different exhaust emission control system deterioration characteristics.

(10) A manufacturer may request the Administrator to include in an engine family group engine families in addition to those grouped under the provisions of paragraph (a)(8) of this section. This request must be accompanied by information the manufacturer believes supports the inclusion of these additional engine families.

(11) A manufacturer may combine into a single engine family group those light-duty vehicle and light-duty truck engine families which otherwise meet the requirements of paragraphs (a) (8) through (10) of this section.

(12) Those vehicles covered by an application for certification which are equipped with gasoline-fueled or methanol-fueled heavy-duty engines will be divided into groupings of vehicles on the basis of physical features which are expected to affect evaporative emissions. Each group of vehicles with similar features must be defined as a separate evaporative emission family.

(13) For gasoline-fueled or methanol-fueled heavy-duty vehicles to be classified in the same evaporative emission family, vehicles must be identical with respect to the items listed in paragraphs (a)(13) (i) and (ii) of this section.

(i) Method of fuel/air metering (that is, carburetion versus fuel injection).

(ii) Carburetor bowl fuel volume, within a 10 cc range.

(14) For vehicles equipped with gasoline-fueled or methanol-fueled heavy-duty engines to be classified in the same evaporative emission control system, vehicles must be identical with respect to the items listed in paragraphs (a)(14) (i) through (ix) of this section.

(i) Method of vapor storage.

(ii) Method of carburetor sealing.

(iii) Method of air cleaner sealing.

(iv) Vapor storage working capacity, within a 20g range.

(v) Number of storage devices.

(vi) Method of purging stored vapors.

(vii) Method of venting the carburetor during both engine off and engine operation.

(viii) Liquid fuel hose material.

(ix) Vapor storage material.

(15) Where vehicles equipped with gasoline-fueled or methanol-fueled heavy-duty engines are types which cannot be divided into evaporative emission family-control system combinations based on the criteria listed above, the Administrator establishes evaporative emission family-control system combinations for those vehicles based on features most related to their evaporative emission characteristics.

(b) *Emission data*—(1) *Light-duty vehicles and light-duty trucks.* This paragraph applies to light-duty vehicle and light-duty truck emission data vehicles.

(i) Vehicles are chosen to be operated and tested for emission data based upon engine family groupings. Within each engine family, one test vehicle is selected. The Administrator selects as the test vehicle the vehicle with the heaviest equivalent test weight (including options) within the family. If more than one vehicle meets this criterion, then within that vehicle grouping, the Administrator selects, in the order listed, the highest road-load power, largest displacement, the transmission with the highest numerical final gear ratio (including overdrive), the highest numerical axle ratio offered in that engine family, and the maximum fuel flow calibration.

(ii) The Administrator selects one additional test vehicle from within each engine family. The additional vehicle

selected is the vehicle expected to exhibit the highest emissions of those vehicles remaining in the engine family. If all vehicles within the engine family are similar, the Administrator may waive the requirements of this paragraph.

(iii) Within an engine family and exhaust emission control system, the manufacturer may alter any emission data vehicle (or other vehicles such as current or previous model year emission data vehicles, fuel economy data vehicles, and development vehicles provided they meet emission data vehicles' protocol) to represent more than one selection under paragraph (b)(1) (i), (ii), (iv), or (vii) of this section.

(iv) If the vehicles selected in accordance with paragraphs (b)(1) (i) and (ii) of this section do not represent each engine-system combination, then one vehicle of each engine-system combination not represented will be selected by the Administrator. The vehicle selected is the vehicle expected to exhibit the highest emissions of those vehicles remaining in the engine family.

(v) For high-altitude exhaust emission compliance for each engine family, the manufacturer must follow one of the procedures described in paragraphs (b)(1)(v) (A) and (B) of this section.

(A) The manufacturer must select for testing under high-altitude conditions the vehicle expected to exhibit the highest emissions from the nonexempt vehicles selected in accordance with § 86.096–24(b)(1) (ii), (iii), and (iv); or

(B) In lieu of testing vehicles according to paragraph (b)(1)(v)(A) of this section, a manufacturer may provide a statement in its application for certification that, based on the manufacturer's engineering evaluation of such high-altitude emission testing as the manufacturer deems appropriate, all light-duty vehicles and light-duty trucks not exempt under § 86.090–8(h) or § 86.094–9(h) comply with the emission standards at high altitude.

(vi) If 90 percent or more of the engine family sales will be in California, a manufacturer may substitute emission data vehicles selected by the California Air Resources Board criteria for the selections specified in § 86.096–24(b)(1) (i), (ii), and (iv).

(vii)(A) Vehicles of each evaporative emission family are divided into evaporative emission control systems.

(B) The Administrator selects the vehicle expected to exhibit the highest evaporative emissions from within each evaporative family to be certified. This vehicle is selected from among the vehicles represented by the exhaust emission data selections for the engine family, unless evaporative testing has already been completed on the vehicle expected to exhibit the highest evaporative emissions for the evaporative family as part of another engine family's testing.

(C) If the vehicles selected in accordance with paragraph (b)(1)(vii)(B) of this section do not represent each evaporative emission control system then the Administrator selects the highest expected evaporative emission vehicle from within the unrepresented evaporative system.

(viii) For high-altitude evaporative emission compliance for each evaporative emission family, the manufacturer must follow one of the procedures listed in paragraphs (b)(1)(viii) (A) and (B) of this section.

(A) The manufacturer will select for testing under high-altitude conditions the one nonexempt vehicle previously selected under paragraph (b)(1)(vii) (B) or (C) of this section which is expected to have the highest level of evaporative emissions when operated at high altitude; or

(B) In lieu of testing vehicles according to § 86.096–24(b)(1)(viii)(A), a manufacturer may provide a statement in its application for certification that, based on the manufacturer's engineering evaluation of such high-altitude emission testing as the manufacturer deems appropriate, all light-duty vehicles and light-duty trucks not exempt under § 86.090–8(h) or § 86.094–9(h) comply with the emission standards at high altitude.

(ix) Vehicles selected under paragraph (b)(1)(v)(A) of this section may be used to satisfy the requirements of paragraph (b)(1)(viii)(A) of this section.

(x) [Reserved]

(xi) For cold temperature CO exhaust emission compliance for each engine family, the Administrator will select for testing the vehicle expected to emit

the highest emissions from the vehicles selected in accordance with paragraphs (b)(1) (i), (ii), (iii), and (iv) of this section. This vehicle is tested by the manufacturer in accordance with the test procedures in subpart C of this part or with alternative procedures requested by the manufacturer and approved in advance by the Administrator.

(xii) For CST exhaust emission compliance for each engine family, the Administrator will select for testing one vehicle from among the vehicles selected in accordance with paragraphs (b)(1) (i) through (iv) of this section. This vehicle is tested by the manufacturer in accordance with the test procedures set forth in subpart O of this part.

(2) *Otto-cycle heavy-duty emission data engines.* This paragraph applies to Otto-cycle heavy-duty emission data engines.

(i)–(ii) [Reserved]

(iii) The Administrator selects a maximum of two engines within each engine family based upon features indicating that they may have the highest emission levels of the engines in the engine family in accordance with the criteria described in paragraphs (b)(2)(iii) (A) and (B) of this section.

(A) The Administrator selects one emission data engine first based on the largest displacement within the engine family. Then from those within the largest displacement the Administrator selects, in the order listed, the engine with the highest fuel flow at the speed of maximum rated torque, with the most advanced spark timing, with no EGR or lowest EGR flow, and with no air pump or with the lowest actual flow air pump.

(B) The Administrator selects one additional engine from within each engine family. The engine selected is the engine expected to exhibit the highest emissions of those engines remaining in the engine family. If all engines within the engine family are similar, the Administrator may waive the requirements of this paragraph.

(iv) If the engines selected in accordance with paragraph (b)(2)(iii) of this section do not represent each engine displacement-exhaust emission control system combination, then the Administrator selects one engine of each engine displacement-exhaust emission control system combination not represented.

(v) Within an engine family/displacement/control system combination, the manufacturer may alter any emission data engine (or other engine including current or previous model year emission data engines and development engines provided they meet the emission data engines' protocol) to represent more than one selection under paragraph (b)(2)(iii) of this section.

(3) *Diesel heavy-duty emission data engines.* This paragraph applies to diesel-cycle heavy-duty emission data engines.

(i) Engines will be chosen to be run for emission data based upon engine family groupings. Within each engine family, the requirements of paragraphs (b)(3) (i) through (iv) of this section must be met.

(ii) Engines of each engine family will be divided into groups based upon their exhaust emission control systems. One engine of each engine system combination must be run for smoke emission data and gaseous emission data. Either the complete gaseous emission test or the complete smoke test may be conducted first. Within each combination, the engine that features the highest fuel feed per stroke, primarily at the speed of maximum rated torque and secondarily at rated speed, will usually be selected. If there are military engines with higher fuel rates than other engines in the same engine system combinations, then one military engine is also selected. The engine with the highest fuel feed per stroke is usually the one selected.

(iii) The Administrator may select a maximum of one additional engine within each engine-system combination based upon features indicating that it may have the highest emission levels of the engines of that combination. In selecting this engine, the Administrator will consider such features as the injection system, fuel system, compression ratio, rated speed, rated horsepower, peak torque speed, and peak torque.

(iv) Within an engine family control system combination, the manufacturer may alter any emission data engine (or other engine including current or previous model year emission data engines

and development engines provided they meet the emission data engines' protocol) to represent more than one selection under paragraphs (b)(3) (ii) and (iii) of this section.

(c) *Durability data*—(1) *Light-duty vehicle durability data vehicles*. This paragraph applies to light-duty vehicle durability data vehicles.

(i) A durability data vehicle is selected by the Administrator to represent each engine-system combination. The vehicle selected must be of the engine displacement with the largest projected sales volume of vehicles with that control-system combination in that engine family and is designated by the Administrator as to transmission type, fuel system, inertia weight class, and test weight.

(ii) A manufacturer may elect to operate and test additional vehicles to represent any engine-system combination. The additional vehicles must be of the same engine displacement, transmission type, fuel system, and inertia weight class as the vehicle selected for that engine-system combination in accordance with the provisions of paragraph (c)(1)(i) of this section. Notice of an intent to operate and test additional vehicles must be given to the Administrator no later than 30 days following notification of the test fleet selection.

(2) *Light-duty trucks*. This paragraph applies to vehicles, engines, subsystems, or components used to establish exhaust emission deterioration factors for light-duty trucks.

(i) The manufacturer must select the vehicles, engines, subsystems, or components to be used to determine exhaust emission deterioration factors for each engine-family control system combination. Whether vehicles, engines, subsystems, or components are used, they must be selected so that their emission deterioration characteristics may be expected to represent those of in-use vehicles, based on good engineering judgment.

(ii) [Reserved]

(3) *Heavy-duty engines*. This paragraph applies to engines, subsystems, or components used to establish exhaust emission deterioration factors for heavy-duty engines.

(i) The manufacturer must select the engines, subsystems, or components to be used to determine exhaust emission deterioration factors for each engine-family control system combination. Whether engines, subsystems, or components are used, they must be selected so that their emission deterioration characteristics may be expected to represent those of in-use engines, based on good engineering judgment.

(ii) [Reserved]

(d) For purposes of testing under § 86.094–26 (a)(9) or (b)(11), the Administrator may require additional emission data vehicles (or emission data engines) and durability data vehicles (light-duty vehicles only) identical in all material respects to vehicles (or engines) selected in accordance with paragraphs (b) and (c) of this section, provided that the number of vehicles (or engines) selected may not increase the size of either the emission data fleet or the durability data fleet by more than 20 percent or one vehicle (or engine), whichever is greater.

(e)(1) [Reserved]

(2) Any manufacturer may request to certify engine families with combined total sales of fewer than 10,000 light-duty vehicles, light-duty trucks, heavy-duty vehicles, and heavy-duty engines utilizing the procedures contained in § 86.094–14 for emission data vehicle selection and determination of deterioration factors. The deterioration factors are applied only to entire engine families.

(f) *Carryover and carryacross of durability and emission data*. In lieu of testing an emission data or durability data vehicle (or engine) selected under paragraph (b) or (c) of this section, and submitting data therefore, a manufacturer may, with the prior written approval of the Administrator, submit exhaust emission data and/or evaporative emission data, as applicable on a similar vehicle (or engine) for which certification has previously been obtained or for which all applicable data required under § 86.096–23 has previously been submitted.

(g) This paragraph applies to light-duty vehicles and light-duty trucks, but does not apply to the production vehicles selected under paragraph (h) of this section.

(1)(i) Where it is expected that more than 33 percent of a carline, within an engine-system combination, will be equipped with an item (whether that item is standard equipment or an option), the full estimated weight of that item must be included in the curb weight computation for each vehicle available with that item in that carline, within that engine-system combination.

(ii) Where it is expected that 33 percent or less of the carline, within an engine-system combination, will be equipped with an item (whether that item is standard equipment or an option), no weight for that item will be added in computing the curb weight for any vehicle in that carline, within that engine-system combination, unless that item is standard equipment on the vehicle.

(iii) In the case of mutually exclusive options, only the weight of the heavier option will be added in computing the curb weight.

(iv) Optional equipment weighing less than three pounds per item need not be considered.

(2)(i) Where it is expected that more than 33 percent of a carline, within an engine-system combination, will be equipped with an item (whether that item is standard equipment or an option) that can reasonably be expected to influence emissions, then such items must actually be installed (unless excluded under paragraph (g)(2)(ii) of this section) on all emission data and durability data vehicles of that carline, within that engine-system combination, on which the items are intended to be offered in production. Items that can reasonably be expected to influence emissions are: air conditioning, power steering, power brakes, and other items determined by the Administrator.

(ii) If the manufacturer determines by test data or engineering evaluation that the actual installation of the optional equipment required by paragraph (g)(2)(i) of this section does not affect the emissions or fuel economy values, the optional equipment need not be installed on the test vehicle.

(iii) The weight of the options must be included in the design curb weight and must also be represented in the weight of the test vehicles.

(iv) The engineering evaluation, including any test data, used to support the deletion of optional equipment from test vehicles, must be maintained by the manufacturer and be made available to the Administrator upon request.

(3) Where it is expected that 33 percent or less of a carline, within an engine-system combination, will be equipped with an item (whether that item is standard equipment or an option) that can reasonably be expected to influence emissions, that item may not be installed on any emission data vehicle or durability data vehicle of that carline, within that engine-system combination, unless that item is standard equipment on that vehicle or specifically required by the Administrator.

(h) *Production AMA Durability Program durability data vehicles.* This paragraph applies to light-duty vehicle durability data vehicles selected under the Production AMA Durability Program described in § 86.094–13.

(1) In order to update the durability data to be used to determine a deterioration factor for each engine family group, the Administrator will select durability data vehicles from the manufacturer's production line. Production vehicles will be selected from each model year's production for those vehicles certified using the Production AMA Durability Program procedures.

(i) The Administrator selects the production durability data vehicle designs from the designs that the manufacturer offers for sale. For each model year and for each engine family group, the Administrator may select production durability data vehicle designs of equal number to the number of engine families within the engine family group, up to a maximum of three vehicles.

(ii) The production durability data vehicles representing the designs selected in paragraph (h)(1)(i) of this section are randomly selected from the manufacturer's production. The Administrator makes these random selections unless the manufacturer (with prior approval of the Administrator) elects to make the random selections.

(iii) The manufacturer may select additional production durability data vehicle designs from within the engine family group. The production durability data vehicles representing these designs must be randomly selected from the manufacturer's production in accordance with paragraph (h)(1)(ii) of this section.

(iv) For each production durability data vehicle selected under paragraph (h)(1) of this section, the manufacturer must provide to the Administrator (before the vehicle is tested or begins service accumulation) the vehicle identification number. Before the vehicle begins service accumulation the manufacturer must also provide the Administrator with a description of the durability data vehicle as specified by the Administrator.

(v) In lieu of testing a production durability data vehicle selected under paragraph (h)(1) of this section, and submitting data therefrom, a manufacturer may, with the prior written approval of the Administrator, submit exhaust emission data from a production vehicle of the same configuration for which all applicable data has previously been submitted.

(2) If, within an existing engine family group, a manufacturer requests to certify vehicles of a new design, engine family, emission control system, or with any other durability-related design difference, the Administrator determines if the existing engine family group deterioration factor is appropriate for the new design. If the Administrator cannot make this determination or deems the deterioration factor not appropriate, the Administrator selects preproduction durability data vehicles under the provisions of paragraph (c) of this section. If vehicles are then certified using the new design, the Administrator may select production vehicles with the new design under the provisions of paragraph (h)(1) of this section.

(3) If a manufacturer requests to certify vehicles of a new design that the Administrator determines are a new engine family group, the Administrator selects preproduction durability data vehicles under the provisions of paragraph (c) of this section. If vehicles are then certified using the new design, the Administrator may select production vehicles of that design under the provisions of paragraph (h)(1) of this section.

[58 FR 58417, Nov. 1, 1993]

§ 86.096–26 Mileage and service accumulation; emission measurements.

Section 86.096–26 includes text that specifies requirements that differ from those specified in §§ 86.094–26 and 86.095–26. Where a paragraph in § 86.094–26 or § 86.095–26 is identical and applicable to § 86.096–26, this may be indicated by specifying the corresponding paragraph and the statement ''[Reserved]. For guidance see § 86.094–26.'' or ''[Reserved]. For guidance see § 86.095–26.''

(a)–(b)(4)(i)(C) [Reserved]. For guidance see § 86.094–26.

(b)(4)(i)(D)–(b)(4)(ii)(D) [Reserved]. For guidance see § 86.095–26.

(b)(4)(iii)–(c)(3) [Reserved]. For guidance see § 86.094–26.

(c)(4) The manufacturer shall determine, for each engine family, the number of hours at which the engine system combination is stabilized for emission-data testing. The manufacturer shall maintain, and provide to the Administrator if requested, a record of the rationale used in making this determination. The manufacturer may elect to accumulate 125 hours on each test engine within an engine family without making a determination. Any engine used to represent emission-data engine selections under § 86.094–24(b)(2) shall be equipped with an engine system combination that has accumulated at least the number of hours determined under this paragraph. Complete exhaust emission tests shall be conducted for each emission-data engine selection under § 86.094–24(b)(2). Evaporative emission controls must be connected, as described in § 86.1337–96(a)(1). The Administrator may determine under § 86.094–24(f) that no testing is required.

(d) [Reserved]. For guidance see § 86.094–26.

[58 FR 16024, Mar. 24, 1993]

§ 86.096–30 Certification.

Section 86.096–30 includes text that specifies requirements that differ from those specified in §§ 86.094–30 and 86.095–30. Where a paragraph in § 86.094–30 or

§ 86.095–30 is identical and applicable to § 86.096–30, this may be indicated by specifying the corresponding paragraph and the statement ''[Reserved]. For guidance see § 86.094–30.'' or ''[Reserved]. For guidance see § 86.095–30.''

(a)(1)(i)–(a)(2) [Reserved]. For guidance see § 86.094–30.

(a)(3)(i)–(a)(4)(iii) introductory text [Reserved]. For guidance see § 86.095–30.

(a)(4)(iii)(A)–(a)(4)(iii)(C) [Reserved]. For guidance see § 86.094–30.

(a)(4)(iv) introductory text [Reserved]. For guidance see § 86.095–30.

(a)(4)(iv)(A)–(a)(12) [Reserved]. For guidance see § 86.094–30.

(a)(13) [Reserved]. For guidance see § 86.095–30.

(a)(14) [Reserved]. For guidance see § 86.094–30.

(a)(15) For all light-duty vehicles certified to evaporative test procedures and accompanying standards specified under § 86.096–8:

(i) All certificates issued are conditional upon the manufacturer complying with all provisions of § 86.096–8 both during and after model year production.

(ii) Failure to meet the required implementation schedule sales percentages as specified in § 86.096–8 will be considered to be a failure to satisfy the conditions upon which the certificate was issued and the vehicles sold in violation of the implementation schedule shall not be covered by the certificate.

(iii) The manufacturer shall bear the burden of establishing to the satisfaction of the Administrator that the conditions upon which the certificate was issued were satisfied.

(16) For all light-duty trucks certified to evaporative test procedures and accompanying standards specified under § 86.096–9:

(i) All certificates issued are conditional upon the manufacturer complying with all provisions of § 86.096–9 both during and after model year production.

(ii) Failure to meet the required implementation schedule sales percentages as specified in § 86.096–9 will be considered to be a failure to satisfy the conditions upon which the certificate was issued and the vehicles sold in violation of the implementation schedule shall not be covered by the certificate.

(iii) The manufacturer shall bear the burden of establishing to the satisfaction of the Administrator that the conditions upon which the certificate was issued were satisfied.

(17) For all heavy-duty vehicles certified to evaporative test procedures and accompanying standards specified under § 86.096–10:

(i) All certificates issued are conditional upon the manufacturer complying with all provisions of § 86.096–10 both during and after model year production.

(ii) Failure to meet the required implementation schedule sales percentages as specified in § 86.096–10 will be considered to be a failure to satisfy the conditions upon which the certificate was issued and the vehicles sold in violation of the implementation schedule shall not be covered by the certificate.

(iii) The manufacturer shall bear the burden of establishing to the satisfaction of the Administrator that the conditions upon which the certificate was issued were satisfied.

(18) For all heavy-duty vehicles certified to evaporative test procedures and accompanying standards specified under § 86.098–11:

(i) All certificates issued are conditional upon the manufacturer complying with all provisions of § 86.098–11 both during and after model year production.

(ii) Failure to meet the required implementation schedule sales percentages as specified in § 86.098–11 will be considered to be a failure to satisfy the conditions upon which the certificate was issued and the vehicles sold in violation of the implementation schedule shall not be covered by the certificate.

(iii) The manufacturer shall bear the burden of establishing to the satisfaction of the Administrator that the conditions upon which the certificate was issued were satisfied.

(19) For all light-duty vehicles and light light-duty trucks certified to standards under §§ 86.1710 through 86.1712, the provisions of paragraphs (a)(19) (i) through (iv) of this section apply.

(i) All certificates issued are conditional upon manufacturer compliance with all provisions of §§ 86.1710 through

86.1712 both during and after model year production.

(ii) Failure to meet the requirements of § 86.1710 (a) through (d) will be considered to be a failure to satisfy the conditions upon which the certificate(s) was issued and the vehicles sold in violation of the fleet average NMOG standard shall not be covered by the certificate.

(iii) The manufacturer shall bear the burden of establishing to the satisfaction of the Administrator that the conditions upon which the certificate was issued were satisfied.

(iv) For recall and warranty purposes, vehicles not covered by a certificate because of a violation of this condition of the certificate will continue to be held to the standards stated in the certificate that would have otherwise applied to the vehicles.

(20) For all light-duty vehicles and light light-duty trucks certified to standards under §§ 86.1710 through 86.1712, the provisions of paragraphs (a)(20) (i) through (iv) of this section apply.

(i) All certificates issued are conditional upon manufacturer compliance with all provisions of §§ 86.1710 through 86.1712 both during and after model year production.

(ii) Failure to comply fully with the prohibition against a manufacturer selling credits that it has not generated or are not available, as specified in § 86.1710(e), will be considered to be a failure to satisfy the conditions upon which the certificate(s) was issued and the vehicles sold in violation of this prohibition shall not be covered by the certificate.

(iii) The manufacturer shall bear the burden of establishing to the satisfaction of the Administrator that the conditions upon which the certificate was issued were satisfied.

(iv) For recall and warranty purposes, vehicles not covered by a certificate because of a violation of this condition of the certificate will continue to be held to the standards stated in the certificate that would have otherwise applied to the vehicles.

(21) For all light-duty vehicles and light light-duty trucks certified to standards under §§ 86.1710 through 86.1712, the provisions of paragraphs (a)(21) (i) through (iv) of this section apply.

(i) All certificates issued are conditional upon manufacturer compliance with all provisions of §§ 86.1710 through 86.1712 both during and after model year production.

(ii) Failure to comply fully with the prohibition against offering for sale Tier 1 vehicles and TLEVs in the Northeast Trading Region, as defined in § 86.1702, after model year 2000 if vehicles with the same engine families are not certified and offered for sale in California in the same model year, as specified in § 86.1711(a), will be considered to be a failure to satisfy the conditions upon which the certificate(s) was issued and the vehicles sold in violation of this prohibition shall not be covered by the certificate.

(iii) The manufacturer shall bear the burden of establishing to the satisfaction of the Administrator that the conditions upon which the certificate was issued were satisfied.

(iv) For recall and warranty purposes, vehicles not covered by a certificate because of a violation of this condition of the certificate will continue to be held to the standards stated in the certificate that would have otherwise applied to the vehicles.

(22) [Reserved]

(23)(i) The Administrator will issue a National LEV certificate of conformity for 1999 model year vehicles or engines certified to comply with the California TLEV, LEV, or ULEV emission standards.

(ii) This certificate of conformity shall be granted after the Administrator has received and reviewed the California Executive Order a manufacturer has received for the same vehicles or engines.

(iii) Vehicles or engines receiving a certificate of conformity under the provisions in this paragraph can only be sold in the states included in the NTR, as defined in § 86.1702, and those states where the sale of California-certified vehicles is otherwise authorized.

(24)(i) The Administrator will issue a National LEV certificate of conformity for 2000 model year vehicles or engines certified to comply with the California TLEV emission standards.

(ii) This certificate of conformity shall be granted after the Administrator has received and reviewed the California Executive Order a manufacturer has received for the same vehicles or engines.

(iii) Vehicles or engines receiving a certificate of conformity under the provisions in this paragraph can only be sold in the states included in the NTR, as defined in § 86.1702, and those states where the sale of California-certified vehicles is otherwise authorized.

(b)–(f) [Reserved]. For guidance see § 86.094–30.

[58 FR 16024, Mar. 24, 1993, as amended at 58 FR 34536, June 28, 1993; 62 FR 31233, June 6, 1997; 63 FR 965, Jan. 7, 1998]

§ 86.096–35 Labeling.

Section 86.096–35 includes text that specifies requirements that differ from § 86.095–35. Where a paragraph in § 86.095–35 is identical and applicable to § 86.096–35, this may be indicated by specifying the corresponding paragraph and the statement ''[Reserved]. For guidance see § 86.095–35.''

(a) introductory text through (a)(1)(iii)(L) [Reserved]. For guidance see § 86.095–35.

(a)(1)(iii)(M) For model years 1996 through 1998 light-duty vehicles, a clear indication of which test procedure was used to certify the evaporative family, e.g., ''Evaporative Family xx (§ 86.130–96 procedures)'' or ''Evaporative Family xx (§ 86.130–78 procedures).''

(N)(*1*) For vehicles exempted from compliance with certain revised performance warranty procedures, as specified in § 86.096–21(j), a statement indicating the specific performance warranty test(s) of 40 CFR part 85, subpart W not to be performed.

(*2*) For vehicles exempted from compliance with all revised performance warranty procedures, as specified in § 86.096–21(k), a statement indicating:

(*i*) that none of the performance warranty tests of 40 CFR part 85, subpart W is to be performed, and

(*ii*) the name of the Administrator-approved alternative test procedure to be performed.

(a)(2) Heading through (a)(2)(iii)(N) [Reserved]. For guidance see § 86.095–35.

(a)(2)(iii)(O) For model years 1996 through 1998 light-duty trucks, a clear indication of which test procedure was used to certify the evaporative family, e.g., ''Evaporative Family xx (§ 86.130–96 procedures)'' or ''Evaporative Family xx (§ 86.130–78 procedures).''

(P)(*1*) For vehicles exempted from compliance with certain revised performance warranty procedures, as specified in § 86.096–21(j), a statement indicating the specific performance warranty test(s) of 40 CFR part 85, subpart W not to be performed.

(*2*) For vehicles exempted from compliance with all revised performance warranty procedures, as specified in § 86.096–21(k), a statement indicating:

(*i*) that none of the performance warranty tests of 40 CFR part 85, subpart W, is to be performed, and

(*ii*) the name of the Administrator-approved alternative test procedure to be performed.

(a)(3)–(a)(4)(iii)(F) [Reserved]. For guidance see § 86.095–35.

(a)(4)(iii)(G) For model years 1996 through 1998 gasoline-fueled and methanol-fueled heavy-duty vehicles, a clear indication of which test procedure was used to certify the evaporative family, e.g., ''Evaporative Family xx (§ 86.1230–96 procedures)'' or ''Evaporative Family xx (§ 86.1230–85 procedures).''

(b)–(i) [Reserved]. For guidance see § 86.095–35.

[58 FR 16024, Mar. 24, 1993, as amended at 58 FR 34536, June 28, 1993; 58 FR 58421, Nov. 1, 1993]

§ 86.096–38 Maintenance instructions.

This section includes text that specifies requirements that differ from those specified in § 86.087–38. Where a paragraph in § 86.087–38 is identical and applicable to § 86.096–38, this may be indicated by specifying the corresponding paragraph and the statement ''[Reserved]. For guidance see § 86.087–38.''

(a)–(f) [Reserved]. For guidance see § 86.087–38.

(g) Emission control diagnostic service information:

(1) Manufacturers are subject to the provisions of this paragraph (g) beginning in the 1996 model year for manufacturers of light-duty vehicles and

light-duty trucks, and beginning in the 2005 model year for manufacturers of heavy-duty vehicles and heavy-duty engines weighing 14,000 pounds gross vehicle weight (GVW) and less that are subject to the OBD requirements of this part.

(2) *General requirements.* (i) Manufacturers shall furnish or cause to be furnished to any person engaged in the repairing or servicing of motor vehicles or motor vehicle engines, or the Administrator upon request, any and all information needed to make use of the on-board diagnostic system and such other information, including instructions for making emission-related diagnoses and repairs, including but not limited to service manuals, technical service bulletins, recall service information, bi-directional control information, and training information, unless such information is protected by section 208(c) of the Act as a trade secret. No such information may be withheld under section 208(c) of the Act if that information is provided (directly or indirectly) by the manufacturer to franchised dealers or other persons engaged in the repair, diagnosing, or servicing of motor vehicles or motor vehicle engines.

(ii) *Definitions.* The following definitions apply for this paragraph (g):

(A) Aftermarket service provider means any individual or business engaged in the diagnosis, service, and repair of a motor vehicle or engine, who is not directly affiliated with a manufacturer or manufacturer-franchised dealership.

(B) Bi-directional control means the capability of a diagnostic tool to send messages on the data bus that temporarily overrides the module's control over a sensor or actuator and gives control to the diagnostic tool operator. Bi-directional controls do not create permanent changes to engine or component calibrations.

(C) Data stream information means information (*i.e.,* messages and parameters) originated within the vehicle by a module or intelligent sensors (*i.e.,* a sensor that contains and is controlled by its own module) and transmitted between a network of modules and/or intelligent sensors connected in parallel with either one or more communication wires. The information is broadcast over the communication wires for use by the OBD system to gather information on emissions-related components or systems and from other vehicle modules that may impact emissions, including but not limited to systems such as chassis or transmission. For the purposes of this section, data stream information does not include engine calibration-related information, or any data stream information from systems or modules that do not impact emissions.

(D) Emissions-related information means any information related to the diagnosis, service, and repair of emissions-related components. Emissions-related information includes, but is not limited to, information regarding any system, component or part of a vehicle that controls emissions and any system, component and/or part associated with the powertrain system, including, but not limited to:

(*1*) The engine, the fuel system and ignition system,

(*2*) Information for any system, component or part that is likely to impact emissions, such as transmission systems, and any other information specified by the Administrator to be relevant to the diagnosis and repair of an emissions-related problem; and

(*3*) Any other information specified by the Administrator to be relevant for the diagnosis and repair of an emissions-related failure found through the inspection and maintenance program after such finding has been communicated to the affected manufacturer(s).

(E) Emissions-related training information means any information-related training or instruction for the purpose of the diagnosis, service, and repair of emissions-related components.

(F) Enhanced service and repair information means information which is specific for an original equipment manufacturer's brand of tools and equipment. This includes computer or anti-theft system initialization information necessary for the completion of any emissions-related repair on motor vehicles that employ integral vehicle security systems.

(G) Equipment and tool company means a registered automotive equipment or software company either public or private that is engaged in, or plans to engage in, the manufacture of automotive scan tool reprogramming equipment or software.

(H) Generic service and repair information means information which is not specific for an original equipment manufacturer's brand of tools and equipment.

(I) Indirect information means any information that is not specifically contained in the service literature, but is contained in items such as tools or equipment provided to franchised dealers (or others). This includes computer or anti-theft system initialization information necessary for the completion of any emissions-related repair on motor vehicles that employ integral vehicle security systems.

(J) Intermediary means any individual or entity, other than an original equipment manufacturer, which provides service or equipment to aftermarket service providers.

(K) Manufacturer-franchised dealership means any service provider with which a manufacturer has a direct business relationship.

(L) Third-party information provider means any individual or entity, other than an original equipment manufacturer, who consolidates manufacturer service information and makes this information available to aftermarket service providers.

(M) Third-party training provider means any individual or entity, other than an original equipment manufacturer who develops and/or delivers instructional and educational material for automotive training courses.

(3) *Information dissemination.* By December 24, 2003, each manufacturer shall provide or cause to be provided to the persons specified in paragraph (g)(2)(i) of this section and to any other interested parties a manufacturer-specific World Wide Web site containing the information specified in paragraph (g)(2)(i) of this section for 1996 and later model year vehicles which have been offered for sale; this requirement does not apply to indirect information, including the information specified in paragraphs (g)(12) through (g)(16) of this section. Upon request and approval of the Administrator, manufacturers who can demonstrate significant hardship in complying with this provision within four months after the effective date may request an additional six months lead time to meet this requirement. Each manufacturer Web site shall:

(i) Provide access in full-text to all of the information specified in paragraph (g)(5) of this section.

(ii) Be updated at the same time as manufacturer-franchised dealership World Wide Web sites;

(iii) Provide users with a description of the minimum computer hardware and software needed by the user to access that manufacturer's information (*e.g.*, computer processor speed and operating system software). This description shall appear when users first log-on to the home page of the manufacturer Web site.

(iv) Provide Short-Term (24 to 72 hours), Mid-Term (30 day period), and Long-Term (365 day period) Web site subscription options to any person specified in paragraph (g)(2)(i) of this section whereby the user will be able to access the site, search for the information, and purchase, view and print the information at a fair and reasonable cost as specified in paragraph (g)(7) of this section for each of the subscription options. In addition, for each of the subscription options, manufacturers are required to make their entire site accessible for the respective period of time and price. In other words, a manufacturer may not limit any or all of the subscription options to just one make or one model.

(v) Allow the user to search the manufacturer Web site by various topics including but not limited to model, model year, key words or phrases, etc., while allowing ready identification of the latest vehicle calibration. Manufacturers who do not use model year to classify their vehicles in their service information may use an alternate vehicle delineation such as body series. Any manufacturer utilizing this flexibility shall create a cross-reference to the corresponding model year and provide this cross-reference on the manufacturer Web site home page.

(vi) Provide accessibility using common, readily available software and shall not require the use of software, hardware, viewers, or browsers that are not readily available to the general public. Manufacturers shall also provide hyperlinks to any plug-ins, viewers or browsers (*e.g.* Adobe Acrobat or Netscape) needed to access the manufacturer Web site.

(vii) Allow simple hyper-linking to the manufacturer Web site from government Web sites and automotive-related Web sites.

(viii) Allow access to the manufacturer Web site with no limits on the modem speed by which aftermarket service providers or other interested parties can connect to the manufacturer Web site.

(ix) Possess sufficient server capacity to allow ready access by all users and have sufficient capacity to assure that all users may obtain needed information without undue delay.

(x) Correct or delete broken Web links on a weekly basis.

(xi) Allow for Web site navigation that does not require a user to return to the manufacturer home page or a search engine in order to access a different portion of the site.

(xii) Allow users to print out any and all of the materials required to be made available on the manufacturer Web site including the ability to print it at the user's location.

(4) *Small volume provisions for information dissemination.* (i) Manufacturers with annual sales of less than 5,000 vehicles shall have until June 28, 2004 to launch their individual Web sites as required by paragraph (g)(3) of this section.

(ii) Manufacturers with annual sales of less than 1,000 vehicles may, in lieu of meeting the requirement of paragraph (g)(3) of this section, request the Administrator to approve an alternative method by which the required emissions-related information can be obtained by the persons specified in paragraph (g)(2)(i) of this section.

(5) *Required information.* All information relevant to the diagnosis and completion of emissions-related repairs shall be posted on manufacturer Web sites. This excludes indirect information specified in paragraphs (g)(6) and (g)(12) through (g)(16) of this section. To the extent that this information does not already exist in some form for their manufacturer franchised dealerships, manufacturers are required to develop and make available the information required by this section to both their manufacturer franchised dealerships and the aftermarket. The required information includes, but is not limited to:

(i) Manuals, including subsystem and component manuals developed by a manufacturer's third party supplier that are made available to manufacturer franchised dealerships, technical service bulletins (TSBs), recall service information, diagrams, charts, and training materials. Manuals and other such service information from third party suppliers are not required to be made available in full-text on manufacturer Web sites as described in paragraph (g)(3) of this section. Rather, manufacturers must make available on the manufacturer Web site as required by paragraph (g)(3) of this section an index of the relevant information and instructions on how to order such third party information. In the alternative, a manufacturer can create a link from its Web site to the Web site(s) of the third party supplier.

(ii) OBD system information which includes, but is not limited to, the following:

(A) A general description of the operation of each monitor, including a description of the parameter that is being monitored;

(B) A listing of all typical OBD diagnostic trouble codes associated with each monitor;

(C) A description of the typical enabling conditions (either generic or monitor-specific) for each monitor (if equipped) to execute during vehicle operation, including, but not limited to, minimum and maximum intake air and engine coolant temperature, vehicle speed range, and time after engine startup. In addition, manufacturers shall list all monitor-specific OBD drive cycle information for all major OBD monitors as equipped including, but not limited to, catalyst, catalyst heater, oxygen sensor, oxygen sensor heater, evaporative system, exhaust gas re-circulation (EGR), secondary

air, and air conditioning system. Additionally, for diesel vehicles under 14,000 pounds. GVWR which also perform misfire, fuel system and comprehensive component monitoring under specific driving conditions (*i.e.,* non-continuous monitoring; as opposed to spark ignition engines that monitor these systems under all conditions or continuous monitoring), the manufacturer shall make available monitor-specific drive cycles. Any manufacturer who develops generic drive cycles, either in addition to, or instead of, monitor-specific drive cycles shall also make these available in full-text on manufacturer Web sites;

(D) A listing of each monitor sequence, execution frequency and typical duration;

(E) A listing of typical malfunction thresholds for each monitor;

(F) For OBD parameters for specific vehicles that deviate from the typical parameters, the OBD description shall indicate the deviation and provide a separate listing of the typical values for those vehicles;

(G) Identification and scaling information necessary to interpret and understand data available to a generic scan tool through ''mode 6,'' pursuant to Society of Automotive Engineers SAE J1979, ''EE Diagnostic Test Modes'' (Incorporated by reference, *see* § 86.1).

(H) Algorithms, look-up tables, or any values associated with look-up tables are not required to be made available.

(iii) Any information regarding any system, component, or part of a vehicle monitored by the OBD system that could in a failure mode cause the OBD system to illuminate the malfunction indicator light (MIL);

(iv) Any information on other systems that can effect the emission system within a multiplexed system (including how information is sent between emission-related system modules and other modules on a multiplexed bus);

(v) Manufacturer-specific emissions-related diagnostic trouble codes (DTCs) and any related service bulletins, trouble shooting guides, and/or repair procedures associated with these manufacturer-specific DTCs; and

(vi) Information regarding how to obtain the information needed to perform reinitialization of any vehicle computer or anti-theft system following an emissions-related repair.

(6) *Anti-theft system initialization information.* Computer or anti-theft system initialization information and/or related tools necessary for the proper installation of on-board computers or necessary for the completion of any emissions-related repair on motor vehicles that employ integral vehicle security systems or the repair or replacement of any other emission-related part shall be made available at a fair and reasonable cost to the persons specified in paragraph (g)(2)(i) of this section.

(i) Except as provided under paragraph (g)(6)(ii) of this section, manufacturers must make this information available to persons specified in paragraph (g)(2)(i) of this section, such that such persons will not need any special tools or manufacturer-specific scan tools to perform the initialization. Manufacturers may make such information available through, for example, generic aftermarket tools, a pass-through device, or inexpensive manufacturer-specific cables.

(ii) A manufacturer may request Administrator approval for an alternative means to re-initialize vehicles for some or all model year vehicles through the 2007 model year by 1 month following the effective date of the final rule. The Administrator shall approve the request only after the following conditions have been met:

(A) The manufacturer must demonstrate that the availability of such information to aftermarket service providers would significantly increase the risk of vehicle theft.

(B) The manufacturer must make available a reasonable alternative means to install or repair computers, or to otherwise repair or replace an emission-related part.

(C) Any alternative means proposed by a manufacturer cannot require aftermarket technicians to use a manufacturer franchised dealership to obtain information or special tools to re-initialize the anti-theft system. All information must come directly from the

manufacturer or a single manufacturer-specified designee.

(D) Any alternative means proposed by a manufacturer must be available to aftermarket technicians at a fair and reasonable price.

(E) Any alternative must be available to aftermarket technicians within twenty-four hours of the initial request.

(F) Any alternative must not require the purchase of a special tool or tools, including manufacturer-specific tools, to complete this repair. Alternatives may include lease of such tools, but only for appropriately minimal cost.

(G) In lieu of leasing their manufacturer-specific tool to meet this requirement, a manufacturer may also release the necessary information to equipment and tool manufacturers for incorporation into aftermarket scan tools. Any manufacturer choosing this option must release the information to equipment and tool manufacturers within 60 days of Administrator approval. Manufacturers may also comply with this requirement using SAE J2534 for some or all model years through model year 2007.

(7) *Cost of required information.* (i) All information required to be made available by this section shall be made available at a fair and reasonable price. In determining whether a price is fair and reasonable, consideration may be given to relevant factors, including, but not limited to, the following:

(A) The net cost to the manufacturer-franchised dealerships for similar information obtained from manufacturers, less any discounts, rebates, or other incentive programs.

(B) The cost to the manufacturer for preparing and distributing the information, excluding any research and development costs incurred in designing and implementing, upgrading or altering the onboard computer and its software or any other vehicle part or component. Amortized capital costs for the preparation and distribution of the information may be included.

(C) The price charged by other manufacturers for similar information.

(D) The price charged by manufacturers for similar information prior to the launch of manufacturer Web sites.

(E) The ability of aftermarket technicians or shops to afford the information.

(F) The means by which the information is distributed;

(G) The extent to which the information is used, which includes the number of users, and frequency, duration, and volume of use.

(H) Inflation.

(ii) By August 25, 2003, each manufacturer shall submit to the Administrator a request for approval of their pricing structure for their Web sites and amounts to be charged for the information required to be made available under paragraphs (g)(3) and (g)(5) of this section. Subsequent to the approval of the manufacturer Web site pricing structure, manufacturers shall notify the Administrator upon the increase in price of any one or all of the subscription options of 20 percent or more above the previously-approved price, taking inflation into account.

(A) The manufacturer shall submit a request to the Administrator that sets forth a detailed description of the pricing structure and amounts, and support for the position that the pricing structure and amounts are fair and reasonable by addressing, at a minimum, each of the factors specified in paragraph (g)(7)(i) of this section.

(B) The Administrator will act upon the request within 180 days following receipt of a complete request or following receipt of any additional information requested by the Administrator.

(C) The Administrator may decide not to approve, or to withdraw approval for a manufacturer's pricing structure and amounts based on a conclusion that this pricing structure and/or amounts are not, or are no longer, fair and reasonable, by sending written notice to the manufacturer explaining the basis for this decision.

(D) In the case of a decision by the Administrator not to approve or to withdraw approval, the manufacturer shall within three months following notice of this decision, obtain Administrator approval for a revised pricing structure and amounts by following the approval process described in this paragraph (g)(7)(ii).

(8) *Unavailable information*. Any information which is not provided at a fair and reasonable price shall be considered unavailable, in violation of these regulations and section 202(m)(5) of the Clean Air Act.

(9) *Third-party information providers*. By December 24, 2003, manufacturers shall, for model year 2004 and later vehicles and engines, make available to third-party information providers as defined in paragraph (g)(2)(ii) of this section with whom they engage in licensing or business arrangements;

(i) The required emissions-related information as specified in paragraph (g)(5) of this section either:

(A) Directly in electronic format such as diskette or CD-ROM using non-proprietary software, in English; or

(B) Indirectly via a Web site other than that required by paragraph (g)(3) of this section;

(ii) For any manufacturer who utilizes an automated process in their manufacturer-specific scan tool for diagnostic fault trees, the data schema, detail specifications, including category types/codes and vehicle codes, and data format/content structure of the diagnostic trouble trees.

(iii) Manufacturers can satisfy the requirement of paragraph (g)(9)(ii) of this section by making available diagnostic trouble trees on their manufacturer Web sites in full-text.

(iv) Manufacturers are not responsible for the accuracy of the information distributed by third parties. However, where manufacturers charge information intermediaries for information, whether through licensing agreements or other arrangements, manufacturers are responsible for inaccuracies contained in the information they provide to third-party information providers.

(10) *Required emissions-related training information*. By December 24, 2003, for emissions-related training information, manufacturers shall:

(i) Video tape or otherwise duplicate and make available for sale on manufacturer Web sites within 30 days after transmission any emissions-related training courses provided to manufacturer franchised dealerships via the Internet or satellite transmission;

(ii) Provide on the manufacturer Web site an index of all emissions-related training information available for purchase by aftermarket service providers for 1994 and newer vehicles. For model years subsequent to 2003, the required information must be made available for purchase within 3 months of model introduction and then must be made available at the same time it is made available to manufacturer franchised dealerships, whichever is earlier. The index shall describe the title of the course or instructional session, the cost of the video tape or duplicate, and information on how to order the item(s) from the manufacturer Web site. All of the items available must be shipped within 24 hours of the order being placed and are to be made available at a fair and reasonable price as described in paragraph (g)(7) of this section. Manufacturers unable to meet the 24 hour shipping requirement under circumstances where orders exceed supply and additional time is needed by the distributor to reproduce the item being ordered, may exceed the 24 hour shipping requirement, but in no instance can take longer than 14 days to ship the item.

(iii) Provide access to third-party training providers as defined in paragraph (g)(2)(ii) of this section all emission-related training courses transmitted via satellite or Internet offered to their manufacturer franchised dealerships. Manufacturers may not charge unreasonable up-front fees to third-party training providers for this access, but may require a royalty, percentage, or other arranged fee based on per-use enrollment/subscription basis. Manufacturers may take reasonable steps to protect any copyrighted information and are not required to provide this information to parties that do not agree to such steps.

(11) *Timeliness and maintenance of information dissemination*. (i) General Requirements. Subsequent to the initial launch of the manufacturer's Web site, manufacturers must make the information required under paragraph (g)(5) of this section available on their Web site within six months of model introduction, or at the same time it is made available to manufacturer franchised dealerships, whichever is earlier. After

this six-month period, the information must be available and updated on the manufacturer Web site at the same time that the updated information is made available to manufacturer franchised dealerships, except as otherwise specified in this section.

(ii) *Archived information.* Beginning with the 1996 model year, manufacturers must maintain the required information on their Web sites in full-text as defined in paragraph (g)(5) of this section for a minimum of 15 years after model introduction. Subsequent to this fifteen year period, manufacturers may archive the information in the manufacturer's format of choice and provide an index of the archived information on the manufacturer Web site and how it can be obtained by interested parties. Manufacturers shall index their available information with a title that adequately describes the contents of the document to which it refers. Manufacturers may allow for the ordering of information directly from their Web site, or from a Web site hyperlinked to the manufacturer Web site. In the alternative, manufacturers shall list a phone number and address where aftermarket service providers can call or write to obtain the desired information. Manufacturers must also provide the price of each item listed, as well as the price of items ordered on a subscription basis. To the extent that any additional information is added or changed for these model years, manufacturers shall update the index as appropriate. Manufacturers will be responsible for ensuring that all information, including information that is distributed through information distributors, is provided within one regular business day of receiving the order. Items that are less than 20 pages (*e.g.* technical service bulletins) shall be faxed, if requested, to the requestor and manufacturers are required to deliver the information overnight if requested and paid for by the ordering party. Archived information must be made available on demand and at a fair and reasonable price.

(12) *Reprogramming information.* (i) For model years 1996 and later, manufacturers shall make available to the persons specified in paragraph (g)(2)(i) of this section all emissions-related recalibration or reprogramming events (including driveability reprogramming events that may affect emissions) in the format of its choice at the same time they are made available to manufacturer franchised dealerships. This requirement takes effect on September 25, 2003, and within 3 months of model introduction for all new model years.

(ii) For model years 1996 and later manufacturers shall provide persons specified in paragraph (g)(2)(i) of this section with an efficient and cost-effective method for identifying whether the calibrations on vehicles are the latest to be issued. This requirement takes effect on September 25, 2003, and within 3 months of model introduction for all new model years.

(iii) For all 2004 and later OBD vehicles equipped with reprogramming capability, manufacturers shall comply with SAE J2534 (Incorporated by reference, *see* § 86.1). Any manufacturer who cannot comply with SAE J2534 in model year 2004 may request one year additional lead time from the Administrator.

(iv) For model years 2004 and later, manufacturers shall make available to aftermarket service providers the necessary manufacturer-specific software applications and calibrations needed to initiate pass-through reprogramming. This software shall be able to run on a standard personal computer that utilizes standard operating systems as specified in SAE J2534 (Incorporated by reference, see § 86.1).

(v) For model years prior to 2004, manufacturers may use SAE J2534 as described above, provided they make available to the aftermarket any additional required hardware (*i.e.* cables). Manufacturers may not require the purchase or use of a manufacturer-specific scan tool to receive or use this additional hardware. Manufacturers must also make available the necessary manufacturer-specific software applications and calibrations needed to initiate pass-through reprogramming. Manufacturers must also make available to equipment and tool companies any information needed to develop aftermarket equivalents of the manufacturer-specific hardware.

(vi) Manufacturers may take any reasonable business precautions necessary

to protect proprietary business information and are not required to provide this information to any party that does not agree to these reasonable business precautions. The requirement to make hardware available and to release the information to equipment and tool companies takes effect on September 25, 2003, and within 3 months of model introduction for all new model years.

(vii) Manufacturers who cannot comply with paragraphs (g)(12)(v) and (g)(12)(vi) of this section shall make available to equipment and tool companies by September 25, 2003 the following information necessary for reprogramming the Electronic Control Unit (ECU):

(A) The physical hardware requirements for reprogramming events or tools (*e.g.* system voltage requirements, cable terminals/pins, connections such as RS232 or USB, wires, etc.).

(B) ECU data communication (*e.g.* serial data protocols, transmission speed or baud rate, bit timing requirements, etc.).

(C) Information on the application physical interface (API) or layers (descriptions for procedures such as connection, initialization, performing and verifying programming/download, and termination).

(D) Vehicle application information or any other related service information such as special pins and voltages for reprogramming events or additional vehicle connectors that require enablement and specifications for the enablement.

(E) Information that describes what interfaces or combinations of interfaces are used to deliver calibrations from database media (*e.g.* PC using CDROM to the reprogramming device *e.g.* scan tool or black box).

(viii) A manufacturer can propose an alternative to the requirements of paragraph (g)(12)(vii) of this section for how aftermarket service providers can reprogram an ECU. The Administrator will approve this alternative if the manufacturer demonstrates all of the following:

(A) That it cannot comply with paragraph (g)(12)(v) of this section for the vehicles subject to the alternative plan;

(B) That a very small percentage of its vehicles in model years prior to 2004 cannot be reprogrammed with the provisions described in paragraph (g)(12)(v) of this section, or that releasing the information to tool companies would likely not result in this information being incorporated into aftermarket tools; and

(C) That aftermarket service providers will be able to reprogram promptly at a reasonable cost.

(ix) In meeting the requirements of paragraphs (g)(12)(v) through (g)(12)(vii) of this section, manufacturers may take any reasonable business precautions necessary to protect proprietary business information and are not required to provide this information to any party that does not agree to these reasonable business precautions.

(13) *Generic and enhanced information for scan tools.* By September 25, 2003, manufacturers shall make available to equipment and tool companies all generic and enhanced service information including bi-directional control and data stream information as defined in paragraph (g)(2)(ii) of this section. This requirement applies for 1996 and later model year vehicles.

(i) The information required by paragraph (g)(13) of this section shall be provided electronically using common document formats to equipment and tool companies with whom they have appropriate licensing, contractual, and/or confidentiality arrangements. To the extent that a central repository for this information (*e.g.* the TEK-NET library developed by the Equipment and Tool Institute) is used to warehouse this information, the Administrator shall have free unrestricted access. In addition, information required in paragraph (g)(13) of this section shall be made available to equipment and tool companies who are not otherwise members of any central repository and shall have access if the non-members have arranged for the appropriate licensing, contractual and/or confidentiality arrangements with the manufacturer and/or a central repository.

(ii) In addition to the generic and enhanced information defined in paragraph (g)(2)(ii) of this section, manufacturers shall also make available the

following information necessary for developing generic diagnostic scan tools:

(A) The physical hardware requirements for data communication (*e.g.* system voltage requirements, cable terminals/pins, connections such as RS232 or USB, wires, etc.),

(B) ECU data communication (*e.g.* serial data protocols, transmission speed or baud rate, bit timing requirements, etc.),

(C) Information on the application physical interface (API) or layers. (*i.e.*, processing algorithms or software design descriptions for procedures such as connection, initialization, and termination),

(D) Vehicle application information or any other related service information such as special pins and voltages or additional vehicle connectors that require enablement and specifications for the enablement.

(iii) Any manufacturer who utilizes an automated process in its manufacturer-specific scan tool for diagnostic fault trees shall make available to equipment and tool companies the data schema, detail specifications, including category types/codes and vehicle codes, and data format/content structure of the diagnostic trouble trees.

(iv) Manufacturers can satisfy the requirement of paragraph (g)(13)(iii) of this section by making available diagnostic trouble trees on their manufacturer Web sites in full-text.

(14) *Availability of manufacturer-specific scan tools.* Manufacturers shall make available for sale to the persons specified in paragraph (g)(2)(i) of this section their own manufacturer-specific diagnostic tools at a fair and reasonable cost. These tools shall also be made available in a timely fashion either through the manufacturer Web site or through a manufacturer-designated intermediary. Manufacturers who develop different versions of one or more of their diagnostic tools that are used in whole or in part for emission-related diagnosis and repair shall insure that all emission-related diagnosis and repair information is available for sale to the aftermarket at a fair and reasonable cost. Manufacturers shall provide technical support to aftermarket service providers for the tools described in this section, either themselves or through a third party of its choice. Factors for determining fair and reasonable cost include, but are not limited to:

(i) The net cost to the manufacturer's franchised dealerships for similar tools obtained from manufacturers, less any discounts, rebates, or other incentive programs;

(ii) The cost to the manufacturer for preparing and distributing the tools, excluding any research and development costs;

(iii) The price charged by other manufacturers of similar sizes for similar tools;

(iv) The capabilities and functionality of the manufacturer tool;

(v) The means by which the tools are distributed;

(vi) Inflation.

(vii) The ability of aftermarket technicians and shops to afford the tools.

(15) *Changing content of manufacturer-specific scan tools.* Manufacturers who opt to remove non-emissions related content from their manufacturer-specific scan tools and sell them to the persons specified in paragraph (g)(2)(i) of this section shall adjust the cost of the tool accordingly lower to reflect the decreased value of the scan tool. All emissions-related content that remains in the manufacturer-specific tool shall be identical to the information that is contained in the complete version of the manufacturer specific tool. Any manufacturer who wishes to implement this option must request approval from the Administrator prior to the introduction of the tool into commerce.

(16) *Special tools.* (i) Manufacturers who have developed special tools to extinguish the malfunction indicator light (MIL) for Model Years 1994 through 2003 shall make available the necessary information to equipment and tool companies to design a comparable generic tool. This information shall be made available to equipment and tool companies no later than September 25, 2003.

(ii) Manufacturers are prohibited from requiring special tools to extinguish the malfunction indicator light (MIL) beginning with Model Year 2004.

(17) *Reference materials.* Manufacturers shall conform with the following

Society of Automotive Engineers (SAE) standards.

(i) For Web-based delivery of service information, manufacturers shall comply with SAE Recommended Practice J1930 (Revised, May 1998), ''Electrical/Electronic Systems Diagnostic Terms, Definitions, Abbreviations, and Acronyms'' (Incorporated by reference, *see* § 86.1). This recommended practice standardizes various terms, abbreviations, and acronyms associated with on-board diagnostics. Manufacturers shall comply with SAE J1930 beginning with Model Year 2004.

(ii) For identification and scaling information necessary to interpret and understand data available to a generic scan tool through ''mode 6,'' manufacturers shall comply with SAE Recommended Practice J1979 (Revised, September, 1997), ''EE Diagnostic Test Modes'' (Incorporated by reference, *see* § 86.1). This recommended practice describes the implementation of the diagnostic test modes for emissions-related test data. Manufacturers shall comply with SAE J1979 (Incorporated by reference, *see* § 86.1) beginning with Model Year 2004.

(iii) For allowing ECU and equipment and tool manufacturers to satisfy the needs of multiple end users with minimum modification to a basic ECU design, manufacturers shall comply with ''Recommended Practice J2284–3 (May, 2001), ''High Speed CAN (HSC) for Vehicle Applications at 500 KBPS'' (Incorporated by reference, see § 86.1). SAE J2284–3 establishes standard ECU physical layer, data link layer, and media design criteria. Manufacturers may comply with SAE J2284–3 beginning with model year 2003 and shall comply with SAE J2284–3 beginning with model year 2008.

(iv) For pass-through reprogramming capabilities, manufacturers shall comply with SAE Recommended Practice J2534 (February, 2002), ''Recommended Practice for Pass-Thru Vehicle Programming'' (Incorporated by reference, *see* § 86.1). This recommended practice provides technical specifications and information that manufacturers must supply to equipment and tool companies to develop aftermarket pass-through reprogramming tools. Manufacturers shall comply with SAE J2534 beginning with model year 2004.

(18) *Reporting requirements.* Manufacturers shall provide to the Administrator reports on an annual basis within 30 days of the end of the calendar year and upon request of the Administrator, that describe the performance of their individual Web sites. These annual reports shall be submitted to the Administrator electronically utilizing non-proprietary software in the format as agreed to by the Administrator and the manufacturers. Manufacturers may request Administrator approval to report on parameters other than those described below if the manufacturer can demonstrate that those alternate parameters will provide sufficient and similar information for the Administrator to effectively evaluate the manufacturer Web site. These annual reports shall include, at a minimum, monthly measurements of the following parameters:

(i) Total successful requests (measured in number of files including graphic interchange formats (GIFs) and joint photographic expert group (JPEG) images, *i.e.* electronic images such as wiring or other diagrams or pictures). This is defined as the total successful request counts of all the files which have been requested, including pages, graphics, etc.

(ii) Total failed requests (measured in number of files). This is defined as the total failed request counts of all the files which were requested but failed because they could not be found or were read-protected. This includes pages, graphics, etc.

(iii) Average data transferred per day (measured by bytes). This is defined as average amount of data transferred per day from one place to another.

(iv) Daily Summary (measured in number of files/pages by day of week). This is defined as the total number of requests each day of the week, over the time period given at the beginning of the report.

(v) Daily report (measured in number of files/pages by the day of the month). This is defined as how many requests there were in each day of a specific month.

(vi) Browser Summary (measured in number of files/pages by browser type,

i.e., Netscape, Internet Explorer). This is defined as the versions of a browser by vendor.

(vii) Any other information deemed necessary by the Administrator to determine the adequacy of a manufacturer Web site.

(19) *Prohibited acts, liability and remedies.* (i) It is a prohibited act for any person to fail to promptly provide or cause a failure to promptly provide information as required by this paragraph (g), or to otherwise fail to comply or cause a failure to comply with any provision of this paragraph (g).

(ii) Any person who fails or causes the failure to comply with any provision of this paragraph (g) is liable for a violation of that provision. A corporation is presumed liable for any violations of this subpart that are committed by any of its subsidiaries, affiliates or parents that are substantially owned by it or substantially under its control.

(iii) Any person who violates a provision of this paragraph (g) shall be subject to a civil penalty of not more than $32,500 per day for each violation. This maximum penalty is shown for calendar year 2004. Maximum penalty limits for later years may be set higher based on the Consumer Price Index, as specified in 40 CFR part 19. In addition, such person shall be liable for all other remedies set forth in Title II of the Clean Air Act, remedies pertaining to provisions of Title II of the Clean Air Act, or other applicable provisions of law.

[68 FR 38449, June 27, 2003, as amended at 70 FR 40433, July 13, 2005]

§ 86.097–9 Emission standards for 1997 and later model year light-duty trucks.

(a)(1) *Standards*—(i) *Light light-duty trucks.* (A) Exhaust emissions from 1997 and later model year light light-duty trucks shall meet all standards in tables A97–1 and A97–2 in the rows designated with the applicable fuel type and loaded vehicle weight. Light light-duty trucks shall not exceed the applicable standards in table A97–1 and shall not exceed the applicable standards in table A97–2.

TABLE A97–1—INTERMEDIATE USEFUL LIFE STANDARDS (G/MI) FOR LIGHT LIGHT-DUTY TRUCKS

Fuel	LVW (lbs)	THC	NMHC	THCE	NMHCE	CO	NO_X	PM
Gasoline	0–3750	.....	0.25	.....	.....	3.4	0.4	0.08
Gasoline	3751–5750	.....	0.32	.....	.....	4.4	0.7	0.08
Diesel	0–3750	.....	0.25	.....	.....	3.4	1.0	0.08
Diesel	3751–5750	.....	0.32	.....	.....	4.4	.....	0.08
Methanol	0–3750	.....	.....	.....	0.25	3.4	0.4	0.08
Methanol	3751–5750	.....	.....	.....	0.32	4.4	0.7	0.08
Natural Gas	0–3750	.....	0.25	.....	.....	3.4	0.4	0.08
Natural Gas	3751–5750	.....	0.32	.....	.....	4.4	0.7	0.08
LPG	0–3750	.....	0.25	.....	.....	3.4	0.4	0.08
LPG	3751–5750	.....	0.32	.....	.....	4.4	0.7	0.08

TABLE A97–2—FULL USEFUL LIFE STANDARDS (G/MI) FOR LIGHT LIGHT-DUTY TRUCKS

Fuel	LVW (lbs)	THC [1]	NMHC	THCE [1]	NMHCE	CO	NO_X	PM
Gasoline	0–3750	0.80	0.31	.....	.....	4.2	0.6	0.10
Gasoline	3751–5750	0.80	0.40	.....	.....	5.5	0.97	0.10
Diesel	0–3750	0.80	0.31	.....	.....	4.2	1.25	0.10
Diesel	3751–5750	0.80	0.40	.....	.....	5.5	0.97	0.10
Methanol	0–3750	.....	.....	0.80	0.31	4.2	0.6	0.10
Methanol	3751–5750	.....	.....	0.80	0.40	5.5	0.97	0.10
Natural Gas	0–3750	.....	0.31	.....	.....	4.2	0.6	0.10
Natural Gas	3751–5750	.....	0.40	.....	.....	5.5	0.97	0.10
LPG	0–3750	0.80	0.31	.....	.....	4.2	0.6	0.10
LPG	3751–5750	0.80	0.40	.....	.....	5.5	0.97	0.10

[1] Full useful life is 11 years or 120,000 miles, whichever occurs first.

(B)(*1*) Vehicles subject to the standards of paragraph (a)(1)(i)(A) of this section shall be all actual U.S. sales of light-duty vehicles of the applicable model year by a manufacturer.

(*2*) A manufacturer can not use one set of engine families to meet its intermediate useful life standards and another to meet its full useful life standards. The same families which are used to meet the intermediate useful life standards will be required without deviation to meet the corresponding full useful life standards.

(ii) *Heavy light-duty trucks.* (A) Exhaust emissions from 1997 and later model year heavy light-duty trucks shall meet all standards in tables A97–3 and A97–4 in the rows designated with the applicable fuel type and adjusted loaded vehicle weight. Heavy light-duty trucks shall not exceed the applicable standards in table A97–3 and shall not exceed the applicable standards in table A97–4.

TABLE A97–3—INTERMEDIATE USEFUL LIFE STANDARDS (G/MI) FOR HEAVY LIGHT-DUTY TRUCKS

Fuel	ALVW (lbs)	THC	NMHC	THCE	NMHCE	CO	NO_X	PM
Gasoline	3751–5750	.....	0.32	.....	.....	4.4	0.7	.....
Gasoline	>5750	.....	0.39	.....	.....	5.0	1.1	.....
Diesel	3751–5750	.....	0.32	.....	.....	4.4	.....	.....
Diesel	>5750	.....	0.39	.....	.....	5.0	.....	.....
Methanol	3751–5750	.....	.....	.....	0.32	4.4	0.7	.....
Methanol	>5750	.....	.....	.....	0.39	5.0	1.1	.....
Natural Gas	3751–5750	.....	0.32	.....	.....	4.4	0.7	.....
Natural Gas	>5750	.....	0.39	.....	.....	5.0	1.1	.....
LPG	3751–5750	.....	0.32	.....	.....	4.4	0.7	.....
LPG	>5750	.....	0.39	.....	.....	5.0	1.1	.....

TABLE A97–4—FULL USEFUL LIFE STANDARDS (G/MI) FOR HEAVY LIGHT-DUTY TRUCKS

Fuel	ALVW (lbs)	THC	NMHC	THCE	NMHCE	CO	NO_X	PM
Gasoline	3751–5750	0.80	0.46	.....	.....	6.4	0.98	0.10
Gasoline	>5750	0.80	0.56	.....	.....	7.3	1.53	0.12
Diesel	3751–5750	0.80	0.46	.....	.....	6.4	0.98	0.10
Diesel	>5750	0.80	0.56	.....	.....	7.3	1.53	0.12
Methanol	3751–5750	.....	.....	0.80	0.46	6.4	0.98	0.10
Methanol	>5750	.....	.....	0.80	0.56	7.3	1.53	0.12
Natural Gas	3751–5750	.....	0.46	.....	.....	6.4	0.98	0.10
Natural Gas	>5750	.....	0.56	.....	.....	7.3	1.53	0.12
LPG	3751–5750	0.80	0.46	.....	.....	6.4	0.98	0.10
LPG	>5750	0.80	0.56	.....	.....	7.3	1.53	0.12

(B)(*1*) Vehicles subject to the standards of paragraph (a)(1)(ii)(A) of this section shall be all actual U.S. sales of light-duty vehicles of the applicable model year by a manufacturer.

(*2*) A manufacturer can not use one set of engine families to meet its intermediate useful life standards and another to meet its full useful life standards. The same families which are used to meet the intermediate useful life standards will be required without deviation to meet the corresponding full useful life standards.

(iii) Exhaust emissions of carbon monoxide from 1997 and later model year light-duty trucks shall not exceed 0.50 percent of exhaust gas flow at curb idle at a useful life of 11 years or 120,000 miles, whichever first occurs (for Otto-cycle and methanol-natural gas- and liquefied petroleum gas-fueled diesel-cycle light-duty trucks only).

(iv) CST emissions from gasoline-fueled Otto-cycle light-duty trucks measured and calculated in accordance with subpart O of this part may not exceed the standards listed in paragraphs (a)(1)(iv) (A) and (B) of this section.

(A) Hydrocarbons: 100 ppm as hexane.

(B) Carbon monoxide: 0.5%.

(2) The standards set forth in paragraphs (a)(1)(i) and (a)(1)(ii) of this section refer to the exhaust emitted over a driving schedule as set forth in subpart B of this part and measured and calculated in accordance with those procedures. The test weight basis for light light-duty trucks, for the purposes of determining equivalent test

weight as prescribed in § 86.129–94, shall be loaded vehicle weight. The test weight basis for heavy light-duty trucks, for the purposes of determining equivalent test weight as prescribed in § 86.129–94, shall be adjusted loaded vehicle weight. The standard set forth in paragraph (a)(1)(iii) of this section refers to the exhaust emitted at curb idle and measured and calculated in accordance with the procedures set forth in subpart P of this part.

(3) The standards set forth in paragraph (a)(1)(iv) of this section refer to the exhaust emitted during the CST as set forth in subpart O of this part and measured and calculated in accordance with those provisions.

(b) [Reserved]. For guidance see § 86.096–9.

(c) No crankcase emissions shall be discharged into the ambient atmosphere from any 1997 and later model year light-duty truck.

(d)–(f) [Reserved]

(g) Any model year 1997 and later light-duty truck that a manufacturer wishes to certify for sale shall meet the emission standards under both low- and high-altitude conditions as specified in § 86.082–2, except as provided in paragraphs (h) and (i) of this section. Vehicles shall meet emission standards under both low- and high-altitude conditions without manual adjustments or modifications. Any emission control device used to meet emission standards under high-altitude conditions shall initially actuate (automatically) no higher than 4,000 feet above sea level.

(h) The manufacturer may exempt 1997 and later model year light-duty trucks from compliance at high altitude with the emission standards set forth in paragraphs (a) and (b) of this section, if the vehicles are not intended for sale at high altitude and if the requirements of paragraphs (h) (1) and (2) of this section are met.

(1) A vehicle configuration shall only be considered eligible for exemption under paragraph (h) of this section if the requirements of any of paragraphs (h)(1) (i), (ii), (iii), or (iv) of this section are met.

(i) Its design parameters (displacement-to-weight ratio (D/W) and engine speed-to-vehicle-speed ratio (N/V)) fall within the exempted range for that manufacturer for that year. The exempted range is determined according to the following procedure:

(A) The manufacturer shall graphically display the D/W and N/V data of all vehicle configurations it will offer for the model year in question. The axis of the abscissa shall be D/W (where (D) is the engine displacement expressed in cubic centimeters and (W) is the gross vehicle weight (GVW) expressed in pounds), and the axis of the ordinate shall be N/V (where (N) is the crankshaft speed expressed in revolutions per minute and (V) is the vehicle speed expressed in miles per hour). At the manufacturer's option, either the 1:1 transmission gear ratio or the lowest numerical gear ratio available in the transmission will be used to determine N/V. The gear selection must be the same for all N/V data points on the manufacturer's graph. For each transmission/axle ratio combination, only the lowest N/V value shall be used in the graphical display.

(B) The product line is then defined by the equation, $N/V=C(D/W)^{-0.9}$ where the constant, C, is determined by the requirement that all the vehicle data points either fall on the line or lie to the upper right of the line as displayed on the graphs.

(C) The exemption line is then defined by the equation, $N/V=C(0.84\ D/W)^{-0.9}$ where the constant, C, is the same as that found in paragraph (h)(1)(i)(B) of this section.

(D) The exempted range includes all values of N/V and D/W which simultaneously fall to the lower left of the exemption line as drawn on the graph.

(ii) Its design parameters fall within the alternate exempted range for that manufacturer that year. The alternate exempted range is determined by substituting rated horsepower (hp) for displacement (D) in the exemption procedure described in paragraph (h)(1)(i) of this section and by using the product line $N/V=C(hp/W)^{-0.9}$.

(A) Rated horsepower shall be determined by using the Society of Automotive Engineers Test Procedure J 1349 (copies may be obtained from SAE, 400 Commonwealth Dr., Warrendale, PA 15096), or any subsequent version of that test procedure. Any of the horsepower determinants within that test

procedure may be used, as long as it is used consistently throughout the manufacturer's product line in any model year.

(B) No exemptions will be allowed under paragraph (h)(1)(ii) of this section to any manufacturer that has exempted vehicle configurations as set forth in paragraph (h)(1)(i) of this section.

(iii) Its acceleration time (the time it takes a vehicle to accelerate from 0 to a speed not less than 40 miles per hour and not greater than 50 miles per hour) under high-altitude conditions is greater than the largest acceleration time under low-altitude conditions for that manufacturer for that year. The procedure to be followed in making this determination is:

(A) The manufacturer shall list the vehicle configuration and acceleration time under low-altitude conditions of that vehicle configuration which has the highest acceleration time under low-altitude conditions of all the vehicle configurations it will offer for the model year in question. The manufacturer shall also submit a description of the methodology used to make this determination.

(B) The manufacturer shall then list the vehicle configurations and acceleration times under high-altitude conditions of all those vehicles configurations which have higher acceleration times under high-altitude conditions than the highest acceleration time at low altitude identified in paragraph (h)(1)(iii)(A) of this section.

(iv) In lieu of performing the test procedure of paragraph (h)(1)(iii) of this section, its acceleration time can be estimated based on the manufacturer's engineering evaluation, in accordance with good engineering practice, to meet the exemption criteria of paragraph (h)(1)(iii) of this section.

(2) A vehicle shall only be considered eligible for exemption under this paragraph if at least one configuration of its model type (and transmission configuration in the case of vehicles equipped with manual transmissions, excluding differences due to the presence of overdrive) is certified to meet emission standards under high-altitude conditions as specified in paragraphs (a) through (g) of this section. The Certificate of Conformity (the Certificate) covering any exempted configuration(s) will also apply to the corresponding non-exempt configuration(s) required under this subparagraph. As a condition to the exemption, any suspension, revocation, voiding, or withdrawal of the Certificate as it applies to a non-exempt configuration for any reason will result in a suspension of the Certificate as it applies to the corresponding exempted configuration(s) of that model type, unless there is at least one other corresponding non-exempt configuration of the same model type still covered by the Certificate. The suspension of the Certificate as it applies to the exempted configuration(s) will be terminated when any one of the following occurs:

(i) Another corresponding non-exempt configuration(s) receive(s) coverage under the Certificate; or

(ii) Suspension of the Certificate as it applies to the corresponding non-exempt configuration(s) is terminated; or

(iii) The Agency's action(s), with respect to suspension, revocation, voiding or withdrawal of the Certificate as it applies to the corresponding non-exempt configuration(s), is reversed.

(3) The sale of a vehicle for principal use at a designated high-altitude location that has been exempted as set forth in paragraph (h)(1) of this section will be considered a violation of section 203(a)(1) of the Clean Air Act.

(i)(1) The manufacturers may exempt 1997 and later model year light-duty trucks from compliance at low altitude with the emission standards set forth in paragraphs (a) and (b) of this section if the vehicles:

(i) Are not intended for sale at low altitude; and

(ii) Are equipped with a unique, high-altitude axle ratio (rear-wheel drive vehicles) or a unique, high-altitude drivetrain (front-wheel drive vehicles) with a higher N/V ratio than other configurations of that model type which are certified in compliance with the emission standards of paragraphs (a) and (b) of this section under low-altitude conditions.

(2) The sale of a vehicle for principal use at low altitude that has been exempted as set forth in paragraph (i)(1)

of this section will be considered a violation of section 203(a)(1) of the Clean Air Act.

(j) Any light-duty truck that a manufacturer wishes to certify for sale under the provisions of paragraphs (h) or (i) of this section is subject to the provisions of subpart Q of this part.

(k)(1) *Cold Temperature Carbon Monoxide (CO) Standards—Light light-duty trucks.* Exhaust emissions from 1997 and later model year light light-duty trucks with a loaded vehicle weight of 3,750 lbs or less shall not exceed the cold temperature CO standard of 10.0 grams per mile and light light-duty trucks with a loaded vehicle weight of greater than 3,750 lbs shall not exceed a cold temperature CO standard of 12.5 grams per mile, both for an intermediate useful life of 50,000 miles and as measured and calculated under the provisions set forth in subpart C of this part. This standard applies under both low and high altitude conditions.

(2) *Heavy light-duty trucks.* Exhaust emissions from 1997 and later model year heavy light-duty trucks shall not exceed the cold temperature CO standard of 12.5 grams per mile for an intermediate useful life of 50,000 miles, as measured and calculated under the provisions set forth in subpart C of this part. This standard applies under both low and high altitude conditions.

[56 FR 25757, June 5, 1991, as amended at 57 FR 31916, July 17, 1992; 58 FR 16025, Mar. 24, 1993; 58 FR 58421, Nov. 1, 1993; 59 FR 48500, Sept. 21, 1994; 60 FR 34335, June 30, 1995]

§ 86.098–2 Definitions.

The definitions of § 86.096–2 continue to apply to 1996 and later model year vehicles. The definitions listed in this section apply beginning with the 1998 model year.

Dispensed fuel temperature means the temperature (deg.F or deg.C may be used) of the fuel being dispensed into the tank of the test vehicle during a refueling test.

Evaporative/refueling emission control system means a unique combination within an evaporative/refueling family of canister adsorptive material, purge system configuration, purge strategy, and other parameters determined by the Administrator to affect evaporative and refueling emission control system durability or deterioration factors.

Evaporative/refueling emission family means the basic classification unit of a manufacturers' product line used for the purpose of evaporative and refueling emissions test fleet selection and determined in accordance with § 86.098–24.

Fixed liquid level gauge means a type of liquid level gauge used on liquefied petroleum gas-fueled vehicles which uses a relatively small positive shutoff valve and is designed to indicate when the liquid level in the fuel tank being filled reaches the proper fill level. The venting of fuel vapor and/or liquid fuel to the atmosphere during the refueling event is generally associated with the use of the fixed liquid level gauge.

Integrated refueling emission control system means a system where vapors resulting from refueling are stored in a common vapor storage unit(s) with other evaporative emissions of the vehicle and are purged through a common purge system.

Non-integrated refueling emission control system means a system where fuel vapors from refueling are stored in a vapor storage unit assigned solely to the function of storing refueling vapors.

Refueling emissions means evaporative emissions that emanate from a motor vehicle fuel tank(s) during a refueling operation.

Refueling emissions canister(s) means any vapor storage unit(s) that is exposed to the vapors generated during refueling.

Resting losses means evaporative emissions that may occur continuously, that are not diurnal emissions, hot soak emissions, refueling emissions, running losses, or spitback emissions.

Useful life means:

(1) For light-duty vehicles, and for light light-duty trucks not subject to the Tier 0 standards of § 86.094–9(a), intermediate useful life and/or full useful life. Intermediate useful life is a period of use of 5 years or 50,000 miles, whichever occurs first. Full useful life is a period of use of 10 years or 100,000 miles, whichever occurs first, except as otherwise noted in § 86.094–9. The useful life of evaporative and/or refueling

emission control systems on the portion of these vehicles subject to the evaporative emission test requirements of § 86.130–96, and/or the refueling emission test requirements of § 86.151–98, is defined as a period of use of 10 years or 100,000 miles, whichever occurs first.

(2) For light light-duty trucks subject to the Tier 0 standards of § 86.094–9(a), and for heavy light-duty truck engine families, intermediate and/or full useful life. Intermediate useful life is a period of use of 5 years or 50,000 miles, whichever occurs first. Full useful life is a period of use of 11 years or 120,000 miles, whichever occurs first. The useful life of evaporative emission control systems on the portion of these vehicles subject to the evaporative emission test requirements of § 86.130–96 is also defined as a period of 11 years or 120,000 miles, whichever occurs first.

(3) For an Otto-cycle heavy-duty engine family:

(i) For hydrocarbon and carbon monoxide standards, a period of use of 8 years or 110,000 miles, whichever first occurs.

(ii) For the oxides of nitrogen standard, a period of use of 10 years or 110,000 miles, whichever first occurs.

(iii) For the portion of evaporative emission control systems subject to the evaporative emission test requirements of § 86.1230–96, a period of use of 10 years or 110,000 miles, whichever occurs first.

(4) For a diesel heavy-duty engine family:

(i) For light heavy-duty diesel engines, for hydrocarbon, carbon monoxide, and particulate standards, a period of use of 8 years or 110,000 miles, whichever first occurs.

(ii) For light heavy-duty diesel engines, for the oxides of nitrogen standard, a period of use of 10 years or 110,000 miles, whichever first occurs.

(iii) For medium heavy-duty diesel engines, for hydrocarbon, carbon monoxide, and particulate standards, a period of use of 8 years or 185,000 miles, whichever first occurs.

(iv) For medium heavy-duty diesel engines, for the oxides of nitrogen standard, a period of use of 10 years or 185,000 miles, whichever first occurs.

(v) For heavy heavy-duty diesel engines, for hydrocarbon, carbon monoxide, and particulate standards, a period of use of 8 years or 290,000 miles, whichever first occurs, except as provided in paragraph (3)(vii) of this definition.

(vi) For heavy heavy-duty diesel engines, for the oxides of nitrogen standard, a period of use of 10 years or 290,000 miles, whichever first occurs.

(vii) For heavy heavy-duty diesel engines used in urban buses, for the particulate standard, a period of use of 10 years or 290,000 miles, whichever first occurs.

[59 FR 16288, Apr. 6, 1994, as amended at 59 FR 48501, Sept. 21, 1994]

§ 86.098–3 Abbreviations.

(a) The abbreviations in § 86.096–3 continue to apply. The abbreviations in this section apply beginning with the 1998 model year.

(b) The abbreviations of this section apply to this subpart, and also to subparts B, E, F, G, K, M, N, and P of this part, and have the following meanings:

T_D—Dispensed fuel temperature
ABT—Averaging, banking, and trading
HDE—Heavy-duty engine

[62 FR 54716, Oct. 21, 1997]

§ 86.098–7 Maintenance of records; submittal of information; right of entry.

Section 86.098–7 includes text that specifies requirements that differ from those specified in §§ 86.091–7, 86.094–7 and 86.096–7. Where a paragraph in § 86.091–7, § 86.094–7 or § 86.096–7 is identical and applicable to § 86.098–7, this may be indicated by specifying the corresponding paragraph and the statement ''[Reserved]. For guidance see § 86.091–7.'' or ''[Reserved]. For guidance see § 86.094–7.'' or ''[Reserved]. For guidance see § 86.096–7.''.

(a) introductory text through (a)(2) [Reserved]. For guidance see § 86.091–7.

(a)(3) [Reserved]. For guidance see § 86.094–7.

(b)–(c)(2) [Reserved]. For guidance see § 86.091–7.

(c)(3) [Reserved]. For guidance see § 86.094–7.

(c)(4)–(d)(1)(v) [Reserved]. For guidance see § 86.091–7.

(d)(1)(vi)–(d)(2)(iv) [Reserved]. For guidance see § 86.094–7.

(d)(3)–(g) [Reserved]. For guidance see § 86.091–7.

(h)(1)–(h)(5) [Reserved]. For guidance see § 86.094–7.

(h)(6) *Voiding a certificate.* (i) EPA may void ab initio a certificate for a vehicle certified to Tier 0 certification standards or to the respective evaporative and/or refueling test procedure and accompanying evaporative and/or refueling standards as set forth or otherwise referenced in §§ 86.098–8, 86.098–9, or 86.098–10 for which the manufacturer fails to retain the records required in this section or to provide such information to the Administrator upon request.

(h)(6)(ii) to (h)(7)(vi) [Reserved]. For guidance see § 86.096–7.

(h)(6)(vii) EPA evaporative/refueling family.

[59 FR 16288, Apr. 6, 1994, as amended at 60 FR 43888, Aug. 23, 1995]

§ 86.098–8 Emission standards for 1998 and later model year light-duty vehicles.

Section 86.098–8 includes text that specifies requirements that differ from § 86.096–8. Where a paragraph in § 86.096–8 is identical and applicable to § 86.098–8, this may be indicated by specifying the corresponding paragraph and the statement ''[Reserved]. For guidance see § 86.096–8.''

(a)–(b)(5) [Reserved]. For guidance see § 86.096–8.

(b)(6) Vehicles certified to the refueling standards set forth in paragraph (d) of this section are not required to demonstrate compliance with the fuel dispensing spitback standards contained in § 86.096–8 (b)(1)(iii) and (b)(2)(iii): *Provided*, that they meet the requirements of § 86.098–28(f).

(c) [Reserved]. For guidance see § 86.096–8.

(d) Refueling emissions from 1998 and later model year gasoline-fueled and methanol-fueled Otto-cycle and petroleum-fueled and methanol-fueled diesel-cycle light-duty vehicles shall not exceed the following standards. The standards apply equally to certification and in-use vehicles.

(1) *Standards*—(i) *Hydrocarbons (for gasoline-fueled Otto-cycle and petroleum-fueled diesel-cycle vehicles).* 0.20 gram per gallon (0.053 gram per liter) of fuel dispensed.

(ii) *Total hydrocarbon equivalent (for methanol-fueled vehicles).* 0.20 gram per gallon (0.053 gram per liter) of fuel dispensed.

(iii) *Hydrocarbons (for liquefied petroleum gas-fueled vehicles).* 0.15 gram per gallon (0.04 gram per liter) of fuel dispensed.

(iv) *Refueling receptacle (for natural gas-fueled vehicles).* Refueling receptacles on natural gas-fueled vehicles shall comply with the receptacle provisions of the ANSI/AGA NGV1 standard-1994 (as incorporated by reference in § 86.1).

(2)(i) The standards set forth in paragraphs (d)(1) (i) and (ii) of this section refer to a sample of refueling emissions collected under the conditions set forth in subpart B of this part and measured in accordance with those procedures.

(ii) For vehicles powered by petroleum-fueled diesel-cycle engines, the provisions set forth in paragraph (d)(1) of this section may be waived: *Provided*, that the manufacturer complies with the provisions of § 86.098–28(g).

(3)(i) A minimum of the percentage shown in table A98–08 of a manufacturer's sales of the applicable model year's gasoline- and methanol-fueled Otto-cycle and petroleum-fueled and methanol-fueled diesel-cycle light-duty vehicles shall be tested under the procedures in subpart B of this part indicated for 1998 and later model years, and shall not exceed the standards described in paragraph (d)(1) of this section. Vehicles certified in accordance with paragraph (d)(2)(ii) of this section, as determined by the provisions of § 86.098–28(g), shall not be counted in the calculation of the percentage of compliance.

TABLE A98–08—IMPLEMENTATION SCHEDULE FOR LIGHT-DUTY VEHICLE REFUELING EMISSION TESTING

Model year	Sales percentage
1998	40
1999	80
2000 and subsequent	100

(ii) Small volume manufacturers, as defined in § 86.094–14(b) (1) and (2), are exempt from the implementation

schedule of table A98–08 of this section for model years 1998 and 1999. For small volume manufacturers, the standards of paragraph (d) of this section, and the associated test procedures, shall not apply until model year 2000, when 100 percent compliance with the standards of this section is required. This exemption does not apply to small volume engine families as defined in § 86.094–14(b)(5).

(e)–(f) [Reserved]

(g)–(k) [Reserved]. For guidance see § 86.096–8.

[59 FR 16289, Apr. 6, 1994, as amended at 59 FR 48501, Sept. 21, 1994]

§ 86.098–10 Emission standards for 1998 and later model year Otto-cycle heavy-duty engines and vehicles.

Section 86.098–10 includes text that specifies requirements that differ from § 86.096–10. Where a paragraph in § 86.096–10 is identical and applicable to § 86.098–10, this may be indicated by specifying the corresponding paragraph and the statement ''[Reserved]. For guidance see § 86.096–10.''

(a)(1) Except as provided for 2003 and 2004 model years in §§ 86.005–10(f) and 86.1816–05, exhaust emissions from new 1998 and later model year Otto-cycle heavy-duty engines shall not exceed:

(i) *For Otto-cycle heavy-duty engines fueled with either gasoline or liquefied petroleum gas,* and intended for use in all vehicles except as provided in paragraph (a)(3) of this paragraph.

(A) *Hydrocarbons.* 1.1 grams per brake horsepower-hour (0.41 gram per megajoule), as measured under transient operating conditions.

(B) *Carbon monoxide.* (*1*) 14.4 grams per brake horsepower-hour (5.36 grams per megajoule), as measured under transient operating conditions.

(*2*) *For Otto-cycle heavy-duty engines fueled with either gasoline or liquefied petroleum gas and utilizing aftertreatment technology:* 0.50 percent of exhaust gas flow at curb idle.

(C) *Oxides of nitrogen* (*1*) 4.0 grams per brake horsepower-hour (1.49 grams per megajoule), as measured under transient operating conditions.

(*2*) A manufacturer may elect to include any or all of its gasoline-fueled Otto-cycle HDE families in any or all of the NO_X or NO_X plus NMHC ABT programs for HDEs, within the restrictions described in § 86.098–15 as applicable. If the manufacturer elects to include engine families in any of these programs, the NO_X FELs may not exceed 5.0 grams per brake horsepower-hour (1.9 grams per megajoule). This ceiling value applies whether credits for the family are derived from averaging, trading or banking programs.

(*3*) A manufacturer may elect to include any or all of its liquified petroleum gas-fueled Otto-cycle HDE families in any or all of the NO_X or NO_X plus NMHC ABT programs for HDEs, within the restrictions described in § 86.098–15 as applicable. If the manufacturer elects to include engine families in any of these programs, the NO_X FELs may not exceed 5.0 grams per brake horsepower-hour (1.9 grams per megajoule). This ceiling value applies whether credits for the family are derived from averaging, trading or banking programs.

(ii) *For Otto-cycle heavy-duty engines fueled with either gasoline or liquefied petroleum gas,* and intended for use only in vehicles with a Gross Vehicle Weight Rating of greater than 14,000 pounds.

(A) *Hydrocarbons.* 1.9 grams per brake horsepower-hour (0.71 gram per megajoule), as measured under transient operating conditions.

(B) *Carbon Monoxide.* (*1*) 37.1 grams per brake horsepower-hour (13.8 grams per megajoule), as measured under transient operating conditions.

(*2*) *For Otto-cycle heavy-duty engines fueled with either gasoline or liquefied petroleum gas and utilizing aftertreatment technology:* 0.50 percent of exhaust gas flow at curb idle.

(C) *Oxides of nitrogen* (*1*) 4.0 grams per brake horsepower-hour (1.49 grams per megajoule), as measured under transient operating conditions.

(*2*) A manufacturer may elect to include any or all of its gasoline-fueled Otto-cycle HDE families in any or all of the NO_X or NO_X plus NMHC ABT programs for HDEs, within the restrictions described in § 86.098–15 as applicable. If the manufacturer elects to include engine families in any of these programs, the NO_X FELs may not exceed 5.0 grams per brake horsepower-hour (1.9 grams per megajoule). This

ceiling value applies whether credits for the family are derived from averaging, trading or banking programs.

(*3*) A manufacturer may elect to include any or all of its liquified petroleum gas-fueled Otto-cycle HDE families in any or all of the NO_X or NO_X plus NMHC ABT programs for HDEs, within the restrictions described in § 86.098–15 as applicable. If the manufacturer elects to include engine families in any of these programs, the NO_X FELs may not exceed 5.0 grams per brake horsepower-hour (1.9 grams per megajoule). This ceiling value applies whether credits for the family are derived from averaging, trading or banking programs.

(iii) *For methanol-fueled Otto cycle heavy-duty engines* intended for use in all vehicles, except as provided in paragraph (a)(3) of this section.

(A) *Total Hydrocarbon Equivalent*. 1.1 gram per brake horsepower-hour (0.41 gram per megajoule), as measured under transient operating conditions.

(B) *Carbon monoxide*. (*1*) 14.4 grams per brake horsepower-hour (5.36 grams per megajoule), as measured under transient operating conditions.

(*2*) 0.50 percent of exhaust gas flow at curb idle.

(C) *Oxides of nitrogen*. (*1*) 4.0 grams per brake horsepower-hour (1.49 grams per megajoule), as measured under transient operating conditions.

(*2*) A manufacturer may elect to include any or all of its methanol-fueled Otto-cycle HDE families in any or all of the NO_X or NO_X plus NMHC ABT programs for HDEs, within the restrictions described in § 86.098–15 as applicable. If the manufacturer elects to include engine families in any of these programs, the NO_X FELs may not exceed 5.0 grams per brake horsepower-hour (1.9 grams per megajoule). This ceiling value applies whether credits for the family are derived from averaging, trading or banking programs.

(iv) *For methanol-fueled Otto-cycle heavy-duty engines* intended for use only in vehicles with a Gross Vehicle Weight Rating of greater than 14,000 lbs.

(A) *Total Hydrocarbon Equivalent*. 1.9 grams per brake horsepower-hour (0.71 gram per megajoule), as measured under transient operating conditions.

(B) *Carbon monoxide*. (*1*) 37.1 grams per brake horsepower-hour (13.8 grams per megajoule), as measured under transient operating conditions.

(*2*) 0.50 percent of exhaust gas flow at curb idle.

(C) *Oxides of nitrogen*. (*1*) 4.0 grams per brake horsepower-hour (1.49 grams per megajoule), as measured under transient operating conditions.

(*2*) A manufacturer may elect to include any or all of its methanol-fueled Otto-cycle HDE families in any or all of the NO_X or NO_X plus NMHC ABT programs for HDEs, within the restrictions described in § 86.098–15 as applicable. If the manufacturer elects to include engine families in any of these programs, the NO_X FELs may not exceed 5.0 grams per brake horsepower-hour (1.9 grams per megajoule). This ceiling value applies whether credits for the family are derived from averaging, trading or banking programs.

(v) *For natural gas-fueled Otto-cycle heavy-duty engines* intended for use in all vehicles except as provided in paragraph (a)(3) of this section.

(A) *Nonmethane hydrocarbons*. 0.9 gram per brake horsepower-hour (0.33 gram per megajoule), as measured under transient operating conditions.

(B) *Carbon monoxide*. (*1*) 14.4 grams per brake horsepower-hour (5.36 grams per megajoule), as measured under transient operating conditions.

(*2*) *For natural gas-fueled Otto-cycle heavy-duty engines utilizing aftertreatment technology*. 0.50 percent of exhaust flow at curb idle.

(C) *Oxides of nitrogen*. (*1*) 5.0 grams per brake horsepower-hour (1.9 grams per megajoule), as measured under transient operating conditions.

(*2*) A manufacturer may elect to include any or all of its natural gas-fueled Otto-cycle HDE families in any or all of the NO_X or NO_X plus NMHC ABT programs for HDEs, within the restrictions described in § 86.098–15 as applicable. If the manufacturer elects to include engine families in any of these programs, the NO_X FELs may not exceed 5.0 grams per brake horsepower-hour (1.9 grams per megajoule). This ceiling value applies whether credits for the family are derived from averaging, trading or banking programs.

(vi) For *natural gas-fueled Otto-cycle engines* intended for use only in vehicles with a Gross Vehicle Weight Rating of greater than 14,000 pounds.

(A) *Nonmethane hydrocarbons.* 1.7 grams per brake horsepower-hour (0.63 gram per megajoule), as measured under transient operating conditions.

(B) *Carbon monoxide.* (*1*) 37.1 grams per brake horsepower-hour (13.8 grams per megajoule), as measured under transient operating conditions.

(*2*) *For natural gas-fueled Otto-cycle heavy-duty engines utilizing aftertreatment technology.* 0.50 percent of exhaust gas flow at curb idle.

(C) *Oxides of nitrogen.* (*1*) 5.0 grams per brake horsepower-hour (1.9 grams per megajoule), as measured under transient operating conditions.

(*2*) A manufacturer may elect to include any or all of its natural gas-fueled Otto-cycle HDE families in any or all of the NO_X or NO_X plus NMHC ABT programs for HDEs, within the restrictions described in § 86.098–15 as applicable. If the manufacturer elects to include engine families in any of these programs, the NO_X FELs may not exceed 5.0 grams per brake horsepower-hour (1.9 grams per megajoule). This ceiling value applies whether credits for the family are derived from averaging, trading or banking programs.

(2) The standards set forth in paragraph (a)(1) of this section refer to the exhaust emitted over the operating schedule set forth in paragraph (f)(1) of appendix I to this part, and measured and calculated in accordance with the procedures set forth in subpart N or P of this part.

(3)(i) A manufacturer may certify one or more Otto-cycle heavy-duty engine configurations intended for use in all vehicles to the emission standards set forth in paragraphs (a)(1)(ii), (a)(1)(iv) or (a)(1)(vi) of this paragraph: *Provided*, that the total model year sales of such configuration(s), segregated by fuel type, being certified to the emission standards in paragraph (a)(1)(ii) of this section represent no more than five percent of total model year sales of each fuel type Otto-cycle heavy-duty engine intended for use in vehicles with a Gross Vehicle Weight Rating of up to 14,000 pounds by the manufacturer.

(ii) The configurations certified to the emission standards of paragraphs (a)(1) (ii) and (vi) of this section under the provisions of paragraph (a)(3)(i) of this section shall still be required to meet the evaporative emission standards set forth in paragraphs § 86.096–10(b)(1)(i), (b)(2)(i) and (b)(3)(i).

(iii) The configurations certified to the emission standards of paragraphs (a)(1) (ii) and (iv) of this section under the provisions of paragraphs (a)(3) (i) and (ii) of this section shall still be required to meet the evaporative emission standards set forth in paragraphs (b)(1)(i), (b)(2)(i), and (b)(3)(i) of this section.

(b) [Reserved]. For guidance see § 86.096–10.

(c) No crankcase emissions shall be discharged into the ambient atmosphere from any new 1998 or later model year Otto-cycle heavy-duty engine.

(d) Every manufacturer of new motor vehicle engines subject to the standards prescribed in this section shall, prior to taking any of the actions specified in section 203(a)(1) of the Act, test or cause to be tested motor vehicle engines in accordance with applicable procedures in subpart N or P of this part to ascertain that such test engines meet the requirements of paragraphs (a) and (c) of this section.

[58 FR 15800, Mar. 24, 1993, as amended at 59 FR 48501, Sept. 21, 1994; 62 FR 54716, Oct. 21, 1997; 65 FR 59955, Oct. 6, 2000]

§ 86.098–11 Emission standards for 1998 and later model year diesel heavy-duty engines and vehicles.

(a) Exhaust emissions from new 1998 and later model year diesel heavy-duty engines shall not exceed the following:

(1)(i) *Hydrocarbons (for diesel engines fueled with either petroleum-fuel or liquefied petroleum gas).* 1.3 grams per brake horsepower-hour (0.48 gram per megajoule), as measured under transient operating conditions.

(ii) *Total Hydrocarbon Equivalent (for methanol-fueled diesel engines).* 1.3 grams per brake horsepower-hour (0.48 gram per megajoule), as measured under transient operating conditions.

(iii) *Nonmethane hydrocarbons (for natural gas-fueled diesel engines).* 1.2 grams per brake horsepower-hour (0.45

gram per megajoule), as measured under transient operating conditions.

(2) *Carbon monoxide.* (i) 15.5 grams per brake horsepower-hour (5.77 grams per megajoule), as measured under transient operating conditions.

(ii) 0.50 percent of exhaust gas flow at curb idle (methanol-, natural gas-, and liquefied petroleum gas-fueled diesel only).

(3) *Oxides of Nitrogen.* (i) 4.0 grams per brake horsepower-hour (1.49 grams per megajoule), as measured under transient operating conditions.

(ii) A manufacturer may elect to include any or all of its diesel HDE families in any or all of the NO_X or NO_X plus NMHC ABT programs for HDEs, within the restrictions described in § 86.098–15 as applicable. If the manufacturer elects to include engine families in any of these programs, the NO_X FELs may not exceed 5.0 grams per brake horsepower-hour (1.9 grams per megajoule). This ceiling value applies whether credits for the family are derived from averaging, trading or banking programs.

(4) *Particulate.* (i) For diesel engines to be used in urban buses, 0.05 gram per brake horsepower-hour (0.019 gram per megajoule) for certification testing and selective enforcement audit testing, and 0.07 gram per brake horsepower-hour (0.026 gram per megajoule) for in-use testing, as measured under transient operating conditions.

(ii) For all other diesel engines only, 0.10 gram per brake horsepower-hour (0.037 gram per megajoule), as measured under transient operating conditions.

(iii) A manufacturer may elect to include any or all of its diesel HDE families in any or all of the particulate ABT programs for HDEs, within the restrictions described in § 86.098–15 as applicable. If the manufacturer elects to include engine families in any of these programs, the particulate FEL may not exceed:

(A) For engine families intended for use in urban buses, 0.25 gram per brake horsepower-hour (0.093 gram per megajoule).

(B) For engine families *not* intended for use in urban buses, 0.60 gram per brake horsepower-hour (0.22 gram per megajoule).

(C) The ceiling values in paragraphs (a)(4)(iii) (A) and (B) of this section apply whether credits for the family are derived from averaging, trading or banking programs.

(b)(1) The opacity of smoke emission from new 1998 and later model year diesel heavy-duty engine shall not exceed:

(i) 20 percent during the engine acceleration mode.

(ii) 15 percent during the engine lugging mode.

(iii) 50 percent during the peaks in either mode.

(2) The standards set forth in paragraph (b)(1) of this section refer to exhaust smoke emissions generated under the conditions set forth in subpart I of this part and measured and calculated in accordance with those procedures.

(3) Evaporative emissions (total of non-oxygenated hydrocarbons plus methanol) from heavy-duty vehicles equipped with methanol-fueled diesel engines shall not exceed the following standards. The standards apply equally to certification and in-use vehicles. The spitback standard also applies to newly assembled vehicles.

(i) For vehicles with a Gross Vehicle Weight Rating of up to 14,000 lbs:

(A)(*1*) For the full three-diurnal test sequence described in § 86.1230–96, diurnal plus hot soak measurements: 3.0 grams per test.

(*2*) For the supplemental two-diurnal test sequence described in § 86.1230–96, diurnal plus hot soak measurements: 3.5 grams per test.

(B) *Running loss test:* 0.05 grams per mile.

(C) *Fuel dispensing spitback test:* 1.0 gram per test.

(ii) For vehicles with a Gross Vehicle Weight Rating of greater than 14,000 lbs:

(A)(*1*) For the full three-diurnal test sequence described in § 86.1230–96, diurnal plus hot soak measurements: 4.0 grams per test.

(*2*) For the supplemental two-diurnal test sequence described in § 86.1230–96, diurnal plus hot soak measurements: 4.5 grams per test.

(B) *Running loss test:* 0.05 grams per mile.

(iii)(A) For vehicles with a Gross Vehicle Weight Rating of up to 26,000 lbs,

the standards set forth in paragraph (b)(3) of this section refer to a composite sample of evaporative emissions collected under the conditions and measured in accordance with the procedures set forth in subpart M of this part. For certification vehicles only, manufacturers may conduct testing to quantify a level of nonfuel background emissions for an individual test vehicle. Such a demonstration must include a description of the source(s) of emissions and an estimated decay rate. The demonstrated level of nonfuel background emissions may be subtracted from emission test results from certification vehicles if approved in advance by the Administrator.

(B) For vehicles with a Gross Vehicle Weight Rating of greater than 26,000 lbs., the standards set forth in paragraph (b)(3)(ii) of this section refer to the manufacturer's engineering design evaluation using good engineering practice (a statement of which is required in § 86.091–23(b)(4)(ii)).

(iv) All fuel vapor generated during in-use operations shall be routed exclusively to the evaporative control system (e.g., either canister or engine purge). The only exception to this requirement shall be for emergencies.

(v)(A) At least 90 percent of a manufacturer's sales of 1998 model year heavy-duty vehicles equipped with methanol-fueled diesel engines shall not exceed the standards described in paragraph (b)(3) of this section. The remaining vehicles shall be subject to the standards described in § 86.094–11(b)(3). All 1999 model year and later heavy-duty vehicles equipped with methanol-fueled diesel engines shall not exceed the standards described in paragraph (b)(3) of this section.

(B) Optionally, 90 percent of a manufacturer's combined sales of 1998 model year gasoline- and methanol-fueled light-duty vehicles, light-duty trucks, and heavy-duty vehicles shall not exceed the applicable standards.

(C) Small volume manufacturers, as defined in § 86.092–14(b) (1) and (2), are exempt from the phase-in described in paragraph (b)(3)(v)(A) of this section. For small volume manufacturers, the standards of § 86.094–11(b)(3), and the associated test procedures, apply for the 1998 model year. Beginning in the 1999 model year, 100 percent compliance with the standards of this section is required. This exemption does not apply to small volume engine families as defined in § 86.092–14(b)(5).

(4) *Evaporative emissions* from 1998 and later model year heavy-duty vehicles equipped with natural gas-fueled or liquefied petroleum gas-fueled heavy-duty engines shall not exceed the following standards. The standards apply equally to certification and in-use vehicles.

(i) For vehicles with a Gross Vehicle Weight Rating of up to 14,000 pounds for the full three-diurnal test sequence described in § 86.1230–96, diurnal plus hot soak measurements: 3.0 grams per test.

(ii) For vehicles with a Gross Vehicle Weight Rating of greater than 14,000 pounds for the full three-diurnal test sequence described in § 86.1230–96, diurnal plus hot soak measurements: 4.0 grams per test.

(iii)(A) For vehicles with a Gross Vehicle Weight Rating of up to 26,000 pounds, the standards set forth in paragraph (b)(4) of this section refer to a composite sample of evaporative emissions collected under the conditions set forth in subpart M of this part and measured in accordance with those procedures.

(B) For vehicles with a Gross Vehicle Weight Rating greater than 26,000 lbs, the standards set forth in paragraphs (b)(3)(ii) and (b)(4)(ii) of this section refer to the manufacturer's engineering design evaluation using good engineering practice (a statement of which is required in § 86.091–23(b)(4)(ii)).

(c) No crankcase emissions shall be discharged into the ambient atmosphere from any new 1998 or later model year methanol-, natural gas-, or liquefied petroleum gas-fueled diesel, or any naturally-aspirated diesel heavy-duty engine. For petroleum-fueled engines only, this provision does not apply to engines using turbochargers, pumps, blowers, or superchargers for air induction.

(d) Every manufacturer of new motor vehicle engines subject to the standards prescribed in this section shall, prior to taking any of the actions specified in section 203(a)(1) of the Act, test or cause to be tested motor vehicle engines in accordance with applicable

procedures in subpart I or N of this part to ascertain that such test engines meet the requirements of paragraphs (a), (b), (c), and (d) of this section.

[58 FR 15801, Mar. 24, 1993, as amended at 58 FR 34536, June 28, 1993; 59 FR 48502, Sept. 21, 1994; 60 FR 43888, Aug. 23, 1995; 62 FR 54716, Oct. 21, 1997]

§ 86.098–14 Small-volume manufacturers certification procedures.

Section 86.098–14 includes text that specifies requirements that differ from §§ 86.094–14 or 86.095–14. Where a paragraph in § 86.094–14 or § 86.095–14 is identical and applicable to § 86.098–14, this may be indicated by specifying the corresponding paragraph and the statement ''[Reserved]. For guidance see § 86.094–14.'' or ''[Reserved]. For guidance see § 86.095–14.''.

(a)–(c)(7)(i)(C)(*3*) [Reserved]. For guidance see § 86.094–14.

(c)(7)(i)(C)(*4*) For light-duty vehicle, light-duty truck, and heavy-duty vehicle evaporative and/or refueling emissions (as applicable) and for light-duty truck, and heavy-duty engine exhaust emissions, deterioration factors shall be determined in accordance with § 86.098–24.

(c)(7)(ii)–(c)(11)(ii)(B) introductory text [Reserved]. For guidance see § 86.094–14.

(c)(11)(ii)(B)(*1*) Engine evaporative/refueling family names and vehicle (or engine) configurations.

(c)(11)(ii)(B)(*2*)–(c)(11)(ii)(B)(*15*) [Reserved]. For guidance see § 86.094–14.

(c)(11)(ii)(B)(*16*)–(c)(11)(ii)(B)(*18*) [Reserved]. For guidance see § 86.095–14.

(c)(11)(ii)(B)(*19*) For each light-duty vehicle, light-duty truck, or heavy-duty vehicle evaporative/refueling emission family, a description of any unique procedures required to perform evaporative and/or refueling emission tests (as applicable) (including canister working capacity, canister bed volume, and fuel temperature profile for the running loss test) for all vehicles in that evaporative/refueling emission family, and a description of the method used to develop those unique procedures.

(*20*) For each light-duty vehicle, light-duty truck, or heavy-duty vehicle evaporative/refueling emission family:

(*i*) Canister working capacity, according to the procedures specified in § 86.132–96(h)(1)(iv);

(*ii*) Canister bed volume; and

(*iii*) Fuel temperature profile for the running loss test, according to the procedures specified in § 86.129–94(d).

(c)(11)(ii)(C)–(c)(11)(ii)(D)(*5*) [Reserved]. For guidance see § 86.095–14.

(c)(11)(ii)(D)(*6*) [Reserved].

(c)(11)(ii)(D)(*7*)–(c)(15) [Reserved]. For guidance see § 86.094–14.

[59 FR 16289, Apr. 6, 1994]

§ 86.098–15 NO_X and particulate averaging, trading, and banking for heavy-duty engines.

Section 86.098–15 includes text that specifies requirements that differ from § 86.094–15. Where a paragraph in § 86.094–15 is identical and applicable to § 86.098–15, this may be indicated by specifying the corresponding paragraph and the statement ''[Reserved]. For guidance see § 86.094–15.''

(a)–(b) [Reserved]. For guidance see § 86.094–15.

(c)(1) For each participating engine family, NO_X and particulate emission credits (positive or negative) are to be calculated according to one of the following equations and rounded, in accordance with ASTM E29–93a, to the nearest one-tenth of a Megagram (MG). Consistent units are to be used throughout the equation.

(i) For determining credit need for all engine families and credit availability for engine families generating credits for averaging programs only:

$$\text{Emission credits} = (\text{Std} - \text{FEL}) \times (\text{CF}) \times (\text{UL}) \times (\text{Production}) \times (10^{-6})$$

(ii) For determining credit availability for engine families generating credits for trading or banking programs:

$$\text{Emission credits} = (\text{Std} - \text{FEL}) \times (\text{CF}) \times (\text{UL}) \times (\text{Production}) \times (10^{-6}) \times (\text{Discount})$$

(iii) For purposes of the equations in paragraphs (c)(1)(i) and (ii) of this section:

Std = the current and applicable heavy-duty engine NO_X or particulate emission standard in grams per brake horsepower hour or grams per Megajoule.

FEL = the NO_X or particulate family emission limit for the engine family in grams per brake horsepower hour or grams per Megajoule.

CF = a transient cycle conversion factor in BHP-hr/mi or MJ/mi, as given in paragraph (c)(2) of this section.

UL = the useful life, or alternative life as described in paragraph (f) of § 86.094–21, for the given engine family in miles.

Production = the number of engines produced for U.S. sales within the given engine family during the model year. Quarterly production projections are used for initial certification. Actual production is used for end-of-year compliance determination.

Discount = a one-time discount applied to all credits to be banked or traded within the model year generated. The discount applied here is 0.8. Banked credits traded in a subsequent model year will not be subject to an additional discount. Banked credits used in a subsequent model year's averaging program will not have the discount restored.

(2)(i) The transient cycle conversion factor is the total (integrated) cycle brake horsepower-hour or Megajoules, divided by the equivalent mileage of the applicable transient cycle. For Otto-cycle heavy-duty engines, the equivalent mileage is 6.3 miles. For diesel heavy-duty engines, the equivalent mileage is 6.5 miles.

(ii) When more than one configuration is chosen by EPA to be tested in the certification of an engine family (as described in § 86.085–24), the conversion factor used is to be based upon a production weighted average value of the configurations in an engine family to calculate the conversion factor.

(d)–(i) [Reserved]. For guidance see § 86.094–15.

(j) *Optional program for early banking.* Provisions set forth in paragraphs (a) through (i) of this section apply except as specifically stated otherwise in paragraph (j) of this section.

(1) To be eligible for the optional program described in paragraph (j) of this section, the following must apply:

(i) Credits are generated from diesel cycle heavy-duty engines.

(ii) During certification, the manufacturer shall declare its intent to include specific engine families in the program described in this paragraph (j). Separate declarations are required for each program and no engine families may be included in both programs in the same model year.

(2) *Credit generation and use.* (i) Credits shall only be generated by 1998 and later model year engine families.

(ii) Credits may only be used for 2004 and later model year heavy-duty diesel engines. When used with 2004 and later model year engines, NO_X credits may be used to meet the NO_X plus NMHC standard, except as otherwise provided in § 86.004–11(a)(1)(i)(D).

(iii) If a manufacturer chooses to use credits generated under paragraph (j) of this section prior to model year 2004, the averaging, trading, and banking of such credits shall be governed by the program provided in paragraphs (a) through (i) of this section and shall be subject to all discounting, credit life limits and all other provisions contained therein. In the case where the manufacturer can demonstrate that the credits were discounted under the program provided in paragraph (j) of this section, that discount may be accounted for in the calculation of credits described in paragraph (c) of this section.

(3) *Program flexibilities.* (i) NO_X and PM credits that are banked until model year 2004 under this paragraph (j) may be used in 2004 or any model year thereafter without being forfeited due to credit age. This supersedes the requirement in paragraph (f)(2)(i) of this section.

(ii) There are no regional category restraints for averaging, trading, and banking of credits generated under the program described in paragraph (j) of this section. This supersedes the regional category provisions described in the opening text of paragraphs (d) and (e) of this section.

(iii) *Credit discounting.* (A) For NO_X and PM credits generated under this paragraph (j) from engine families with NO_X certification levels greater than 3.5 grams per brake horsepower-hour for oxides of nitrogen, a Discount value of 0.9 shall be used in place of 0.8 in the credit availability equation in paragraph (c)(1) of this section.

(B) For NO_X and PM credits generated under this paragraph (j) from engine families with NOx certification levels less than or equal to 3.5 grams per brake horsepower-hour for oxides of

nitrogen, a Discount value of 1.0 shall be used in place of 0.8 in the credit availability equation in paragraph (c)(1) of this section.

(iv) *Credit apportionment*. At the manufacturers option, credits generated under the provisions described in this section may be sold to or otherwise provided to another party for use in programs other than the averaging, trading and banking program described in this section.

(A) The manufacturer shall pre-identify two emission levels per engine family for the purposes of credit apportionment. One emission level shall be the FEL and the other shall be the level of the standard that the engine family is required to certify to under § 86.098–11. For each engine family, the manufacturer may report engine sales in two categories, ''ABT-only credits'' and ''nonmanufacturer-owned credits''.

(*1*) For engine sales reported as ''ABT-only credits'', the credits generated must be used solely in the ABT program described in this section.

(*2*) The engine manufacturer may declare a portion of engine sales ''nonmanufacturer-owned credits'' and this portion of the credits generated between the standard and the FEL, based on the calculation in paragraph (c)(1) of this section, would belong to another party. For ABT, the manufacturer may not generate any credits for the engine sales reported as ''nonmanufacturer-owned credits''. Engines reported as ''nonmanufacturer-owned credits'' shall comply with the FEL and the requirements of the ABT program in all other respects.

(B) Only manufacturer-owned credits reported as ''ABT-only credits'' shall be used in the averaging, trading, and banking provisions described in this section.

(C) Credits shall not be double-counted. Credits used in the ABT program may not be provided to an engine purchaser for use in another program.

(D) Manufacturers shall determine and state the number of engines sold as ''ABT-only credits'' and ''nonmanufacturer-owned credits'' in the end-of-model year reports required under § 86.098–23.

[62 FR 54716, Oct. 21, 1997]

§ 86.098–17 Emission control diagnostic system for 1998 and later light-duty vehicles and light-duty trucks.

Section 86.098–17 includes text that specifies requirements that differ from § 86.094–17. Where a paragraph in § 86.094–17 is identical and applicable to § 86.098–17, this may be indicated by specifying the corresponding paragraph and the statement ''[Reserved]. For guidance see § 86.094–17.''

(a) introductory text through (a)(3) [Reserved]. For guidance see § 86.094–17.

(a)(4) Any other deterioration or malfunction within the powertrain which occurs in actual use and which results in an exhaust emission increase of greater than 0.2 g/mi HC, 1.7 g/mi CO, or 0.5 g/mi NO_X. or any vapor leak in the evaporative and/or refueling system which results in an evaporative emissions increase of greater than 30.0 g/test measured over the first 24 hours of the diurnal portion of the revised evaporative emissions test procedure, in accordance with test procedures set forth in subpart B of this part, for vehicles certified to that test procedure.

(b)(1) The electronic evaporative and/or refueling emission purge control, if equipped, and all emission-related powertrain components connected to a computer shall, at a minimum, be monitored for circuit continuity. All components required by these regulations to be monitored shall be evaluated periodically, but no less frequently than once per Urban Dynamometer Driving Schedule as defined in 40 CFR part 86, appendix I, paragraph (a), or similar trip.

(b)(2)–(i) [Reserved]. For guidance see § 86.094–17.

(j) Demonstration of compliance with California OBD II requirements (Title 13 California Code Sec. 1968.1), as modified pursuant to California Mail Out #97–24 (December 9, 1997), shall satisfy the requirements of this section, except that compliance with Title 13 California Code Secs. 1968.1(b)(4.2.2), pertaining to evaporative leak detection, and 1968.1(d), pertaining to tampering protection, are not required to satisfy the requirements of this section.

[59 FR 16289, Apr. 6, 1994, as amended at 63 FR 70694, Dec. 22, 1998]

§ 86.098–21 Application for certification.

Section 86.098–21 includes text that specifies requirements that differ from § 86.094–21 or § 86.096–21. Where a paragraph in § 86.094–21 or § 86.096–21 is identical and applicable to § 86.098–21, this may be indicated by specifying the corresponding paragraph and the statement ''[Reserved]. For guidance see § 86.094–21.'' or ''[Reserved]. For guidance see § 86.096–21.''.

(a)–(b)(3) [Reserved]. For guidance see § 86.094–21.

(b)(4)(i) For light-duty vehicles and light-duty trucks, a description of the test procedures to be used to establish the evaporative emission and/or refueling emission deterioration factors (as applicable) required to be determined and supplied in § 86.098–23(b)(2).

(b)(4)(ii)–(iv) [Reserved]. For guidance see § 86.094–21.

(b)(5)(v) For light-duty vehicles with non-integrated refueling emission control systems, the number of continuous UDDS cycles, determined from the fuel economy on the UDDS applicable to the test vehicle of that evaporative/refueling emission family-emission control system combination, required to use a volume of fuel equal to 85% of fuel tank volume.

(b)(6)–(8) [Reserved]. For guidance see § 86.094–21.

(b)(9) For each light-duty vehicle, light-duty truck, or heavy-duty vehicle evaporative/refueling emission family, a description of any unique procedures required to perform evaporative and/or refueling emission tests (as applicable) (including canister working capacity, canister bed volume, and fuel temperature profile for the running loss test) for all vehicles in that evaporative/refueling emission family, and a description of the method used to develop those unique procedures.

(10) For each light-duty vehicle, light-duty truck, or heavy-duty vehicle evaporative/refueling emission family:

(i) Canister working capacity, according to the procedures specified in § 86.132–96(h)(1)(iv);

(ii) Canister bed volume; and

(iii) Fuel temperature profile for the running loss test, according to the procedures specified in § 86.129–94(d).

(c)–(j) [Reserved]. For guidance see § 86.094–21.

(k) and (l) [Reserved]. For guidance see § 86.096–21.

[59 FR 16290, Apr. 6, 1994, as amended at 60 FR 34335, June 30, 1995]

§ 86.098–22 Approval of application for certification; test fleet selections; determinations of parameters subject to adjustment for certification and Selective Enforcement Audit, adequacy of limits, and physically adjustable ranges.

Section 86.098–22 includes text that specifies requirements that differ from § 86.094–22. Where a paragraph in § 86.094–22 is identical and applicable to § 86.098–22, this may be indicated by specifying the corresponding paragraph and the statement ''[Reserved]. For guidance see § 86.094–22.''

(a)–(c) [Reserved]. For guidance see § 86.094–22.

(d) Approval of test procedures. (1) The Administrator does not approve the test procedures for establishing the evaporative and/or refueling emission deterioration factors for light-duty vehicles and light-duty trucks. The manufacturer shall submit the procedures as required in § 86.098–21(b)(4)(i) prior to the Administrator's selection of the test fleet under § 86.098–24(b) (1), and if such procedures will involve testing of durability data vehicles selected by the Administrator or elected by the manufacturer under § 86.098–24(c)(1), prior to initiation of such testing.

(d)(2)–(g) [Reserved]. For guidance see § 86.094–22.

[59 FR 16290, Apr. 6, 1994]

§ 86.098–23 Required data.

Section 86.098–23 includes text that specifies requirements that differ from § 86.095–23. Where a paragraph in § 86.095–23 is identical and applicable to § 86.098–23, this may be indicated by specifying the corresponding paragraph and the statement ''[Reserved]. For guidance see § 86.095–23.''

(a) The manufacturer shall perform the tests required by the applicable test procedures and submit to the Administrator the information described in paragraphs (b) through (m) of this

section, provided, however, that if requested by the manufacturer, the Administrator may waive any requirement of this section for testing of a vehicle (or engine) for which emission data are available or will be made available under the provisions of § 86.091–29.

(b) *Durability data.* (1)(i) The manufacturer shall submit exhaust emission durability data on such light-duty vehicles tested in accordance with applicable test procedures and in such numbers as specified, which will show the performance of the systems installed on or incorporated in the vehicle for extended mileage, as well as a record of all pertinent maintenance performed on the test vehicles.

(ii) The manufacturer shall submit exhaust emission deterioration factors for light-duty trucks and HDEs and all test data that are derived from the testing described under § 86.094–21(b)(5)(i)(A), as well as a record of all pertinent maintenance. Such testing shall be designed and conducted in accordance with good engineering practice to assure that the engines covered by a certificate issued under § 86.098–30 will meet each emission standard (or family emission limit, as appropriate) in § 86.094–9, § 86.098–10, § 86.098–11 or superseding emissions standards sections as appropriate, in actual use for the useful life applicable to that standard.

(b)(2) For light-duty vehicles and light-duty trucks, the manufacturer shall submit evaporative emission and/or refueling emission deterioration factors for each evaporative/refueling emission family-emission control system combination and all test data that are derived from testing described under § 86.098–21(b)(4)(i) designed and conducted in accordance with good engineering practice to assure that the vehicles covered by a certificate issued under § 86.098–30 will meet the evaporative and/or refueling emission standards in § 86.098–8 or § 86.098–9, as appropriate, for the useful life of the vehicle.

(3) For heavy-duty vehicles equipped with gasoline-fueled or methanol-fueled engines, the manufacturer shall submit evaporative emission deterioration factors for each evaporative emission family-evaporative emission control system combination identified in accordance with § 86.094–21(b)(4)(ii). Furthermore, a statement that the test procedure(s) used to derive the deterioration factors includes, but need not be limited to, a consideration of the ambient effects of ozone and temperature fluctuations, and the service accumulation effects of vibration, time, and vapor saturation and purge cycling. The deterioration factor test procedure shall be designed and conducted in accordance with good engineering practice to assure that the vehicles covered by a certificate issued under § 86.098–30 will meet the evaporative emission standards in §§ 86.096–10 and 86.098–11 or superseding emissions standards sections as applicable in actual use for the useful life of the engine. Furthermore, a statement that a description of the test procedure, as well as all data, analyses, and evaluations, is available to the Administrator upon request.

(4)(i) For heavy-duty vehicles with a Gross Vehicle Weight Rating of up to 26,000 lbs and equipped with gasoline-fueled or methanol-fueled engines, the manufacturer shall submit a written statement to the Administrator certifying that the manufacturer's vehicles meet the standards of § 86.098–10 or § 86.098–11 or superseding emissions standards sections as applicable as determined by the provisions of § 86.098–28. Furthermore, the manufacturer shall submit a written statement to the Administrator that all data, analyses, test procedures, evaluations, and other documents, on which the requested statement is based, are available to the Administrator upon request.

(ii) For heavy-duty vehicles with a Gross Vehicle Weight Rating of greater than 26,000 lbs and equipped with gasoline-fueled or methanol-fueled engines, the manufacturer shall submit a written statement to the Administrator certifying that the manufacturer's evaporative emission control systems are designed, using good engineering practice, to meet the standards of § 86.096–10 or § 86.098–11 or superseding emissions standards sections as applicable as determined by the provisions of § 86.098–28. Furthermore, the manufacturer shall submit a written statement to the Administrator that all

data, analyses, test procedures, evaluations, and other documents, on which the requested statement is based, are available to the Administrator upon request.

(b)(4)(iii) For petroleum-fueled diesel-cycle vehicles certifying under the waiver provisions of § 86.098–28, the certifications and representations specified in § 86.098–28.

(c)(1) [Reserved]. For guidance see § 86.095–23.

(c)(2) Certification engines. (i) The manufacturer shall submit emission data on such engines tested in accordance with applicable emission test procedures of this subpart and in such numbers as specified. These data shall include zero-hour data, if generated, and emission data generated for certification as required under § 86.098–26(c)(4). These data shall also include, where there is a combined standard (e.g., NMHC + NO_X), emissions data for the individual pollutants as well as for the pollutants when combined. In lieu of providing emission data on idle CO emissions or particulate emissions from methanol-fueled diesel-cycle certification engines, or on CO emissions from petroleum-fueled or methanol-fueled diesel certification engines the Administrator may, on request of the manufacturer, allow the manufacturer to demonstrate (on the basis of previous emission tests, development tests, or other information) that the engine will conform with the applicable emission standards of § 86.094–11 or superseding emissions standards sections as applicable. In lieu of providing emission data on smoke emissions from methanol-fueled or petroleum-fueled diesel certification engines, the Administrator may, on the request of the manufacturer, allow the manufacturer to demonstrate (on the basis of previous emission tests, development tests, or other information) that the engine will conform with the applicable emissions standards of § 86.098–11 or superseding emissions standards sections as applicable, except for engines with a particulate matter certification level exceeding 0.25 grams per brake horsepower-hour. In lieu of providing emissions data on smoke emissions from petroleum-fueled or methanol-fueled diesel engines when conducting Selective Enforcement Audit testing under 40 CFR part 86, subpart K, the Administrator may, on separate request of the manufacturer, allow the manufacturer to demonstrate (on the basis of previous emission tests, development tests, or other information) that the engine will conform with the applicable smoke emissions standards of § 86.098–11 or superseding emissions standards sections as applicable, except for engines with a particulate matter certification level exceeding 0.25 grams per brake horsepower-hour.

(ii) For heavy-duty diesel engines, a manufacturer may submit hot-start data only, in accordance with subpart N of this part, when making application for certification. However, for confirmatory, Selective Enforcement Audit, and recall testing by the Agency, both the cold-start and hot-start test data, as specified in subpart N of this part, will be included in the official results.

(d) The manufacturer shall submit a statement that the vehicles (or engines) for which certification is requested conform to the requirements in § 86.090–5(b), and that the descriptions of tests performed to ascertain compliance with the general standards in § 86.090–5(b), and that the data derived from such tests, are available to the Administrator upon request.

(e)(1) The manufacturer shall submit a statement that the test vehicles (or test engines) for which data are submitted to demonstrate compliance with the applicable standards (or family emission limits, as appropriate) of this subpart are in all material respects as described in the manufacturer's application for certification, that they have been tested in accordance with the applicable test procedures utilizing the fuels and equipment described in the application for certification, and that on the basis of such tests the vehicles (or engines) conform to the requirements of this part. If such statements cannot be made with respect to any vehicle (or engine) tested, the vehicle (or engine) shall be identified, and all pertinent data relating thereto shall be supplied to the Administrator. If, on the basis of the data

supplied and any additional data as required by the Administrator, the Administrator determines that the test vehicles (or test engine) were not as described in the application for certification or were not tested in accordance with the applicable test procedures utilizing the fuels and equipment as described in the application for certification, the Administrator may make the determination that the vehicle (or engine) does not meet the applicable standards (or family emission limits, as appropriate). The provisions of § 86.098–30(b) shall then be followed.

(2) For evaporative and refueling emission durability, or light-duty truck or HDE exhaust emission durability, the manufacturer shall submit a statement of compliance with paragraph (b)(1)(ii),(b)(2), (b)(3) or (b)(4) of this section, as applicable.

(3) For certification of vehicles with non-integrated refueling systems, a statement that the drivedown used to purge the refueling canister was the same as described in the manufacturers' application for certification. Furthermore, a description of the procedures used to determine the number of equivalent UDDS miles required to purge the refueling canisters, as determined by the provisions of § 86.098–21(b)(5)(v) and subpart B of this part. Furthermore, a written statement to the Administrator that all data, analyses, test procedures, evaluations and other documents, on which the above statement is based, are available to the Administrator upon request.

(f)–(g) [Reserved]. For guidance see § 86.095–23.

(h) Additionally, manufacturers participating in any of the emissions ABT programs under § 86.098–15 or superseding ABT sections for HDEs shall submit for each participating family the items listed in paragraphs (h) (1) through (3) of this section.

(1) *Application for certification.* (i) The application for certification will include a statement that the engines for which certification is requested will not, to the best of the manufacturer's belief, when included in any of the ABT programs, cause the applicable emissions standard(s) to be exceeded.

(ii) The application for certification will also include identification of the section of this subpart under which the family is participating in ABT (i.e., § 86.098–15 or superseding ABT sections), the type (NOX, NO_X+NMHC, or particulate) and the projected number of credits generated/needed for this family, the applicable averaging set, the projected U.S. (49-state or 50 state, as applicable) production volumes, by quarter, NCPs in use on a similar family and the values required to calculate credits as given in the applicable ABT section. Manufacturers shall also submit how and where credit surpluses are to be dispersed and how and through what means credit deficits are to be met, as explained in the applicable ABT section. The application must project that each engine family will be in compliance with the applicable emission standards based on the engine mass emissions and credits from averaging, trading and banking.

(2) [Reserved]

(3) *End-of-year report.* The manufacturer shall submit end-of-year reports for each engine family participating in any of the ABT programs, as described in paragraphs (h)(3)(i) through (iv) of this section.

(i) These reports shall be submitted within 90 days of the end of the model year to: Director, Engine Programs and Compliance Division (6405J), U.S. Environmental Protection Agency, 1200 Pennsylvania Ave., NW., Washington, DC 20460.

(ii) These reports shall indicate the engine family, the averaging set, the actual U.S. (49-state or 50-state, as applicable) production volume, the values required to calculate credits as given in the applicable ABT section, the resulting type and number of credits generated/required, and the NCPs in use on a similar NCP family. Manufacturers shall also submit how and where credit surpluses were dispersed (or are to be banked) and how and through what means credit deficits were met. Copies of contracts related to credit trading must also be included or supplied by the broker if applicable. The report shall also include a calculation of credit balances to show that net mass emissions balances are within those allowed by the emission standards (equal to or greater than a zero credit balance). Any credit discount factor described in

the applicable ABT section must be included as required.

(iii) The production counts for end-of-year reports shall be based on the location of the first point of retail sale (e.g., customer, dealer, secondary manufacturer) by the manufacturer.

(iv) Errors discovered by EPA or the manufacturer in the end-of-year report, including changes in the production counts, may be corrected up to 180 days subsequent to submission of the end-of-year report. Errors discovered by EPA after 180 days shall be corrected if credits are reduced. Errors in the manufacturer's favor will not be corrected if discovered after the 180 day correction period allowed.

(i) Failure by a manufacturer participating in the ABT programs to submit any quarterly or end-of-year report (as applicable) in the specified time for all vehicles and engines that are part of an averaging set is a violation of section 203(a)(1) of the Clean Air Act (42 U.S.C. 7522(a)(1)) for each such vehicle and engine.

(j) Failure by a manufacturer generating credits for deposit only in the HDE banking programs to submit their end-of-year reports in the applicable specified time period (i.e., 90 days after the end of the model year) shall result in the credits not being available for use until such reports are received and reviewed by EPA. Use of projected credits pending EPA review will not be permitted in these circumstances.

(k) Engine families certified using NCPs are not required to meet the requirements outlined in paragraphs (f) through (j) of this section.

(l) [Reserved]. For guidance see § 86.095–23.

(m) Additionally, except for small-volume manufacturers, manufacturers certifying vehicles shall submit for each model year 1998 light-duty vehicle, light-duty truck, and gasoline- and methanol-fueled heavy-duty vehicle evaporative family:

(1) In the application for certification the projected sales volume of evaporative families certifying to the respective evaporative test procedure and accompanying standards as set forth or otherwise referenced in §§ 86.090–8, 86.090–9, 86.091–10 and 86.094–11 or as set forth or otherwise referenced in §§ 86.096–8, 86.096–9, 86.096–10 and 86.098–11 or as set forth or otherwise referenced in superseding emissions standards sections. Volume projected to be produced for U.S. sale may be used in lieu of projected U.S. sales.

(2) End-of-year reports for each evaporative family.

(i) These end-of-year reports shall be submitted within 90 days of the end of the model year to: For heavy-duty engines—Director, Engine Programs and Compliance Divisions (6403J), For vehicles—Director, Vehicle Compliance and Programs Division (6405J), U.S. Environmental Protection Agency, 1200 Pennsylvania Ave., NW., Washington, DC 20460.

(ii) These reports shall indicate the model year, evaporative family and the actual U.S. sales volume. The manufacturer may petition the Administrator to allow volume produced for U.S. sale to be used in lieu of U.S. sales. Such petition shall be submitted within 30 days of the end of the model year to the Manufacturers Operations Division. For the petition to be granted, the manufacturer must establish to the satisfaction of the Administrator that production volume is functionally equivalent to sales volume.

(iii) The U.S. sales volume for end-of-year reports shall be based on the location of the point of sale to a dealer, distributor, fleet operator, broker, or any other entity that comprises the point of first sale.

(iv) Failure by a manufacturer to submit the end-of-year report within the specified time may result in certificate(s) for the evaporative family(ies) being voided ab initio plus any applicable civil penalties for failure to submit the required information to the Agency.

(v) The information shall be organized in such a way as to allow the Administrator to determine compliance with the Evaporative Emission Testing implementation schedules of §§ 86.096–8, 86.096–9, 86.096–10 and 86.098–11.

[58 FR 16025, Mar. 24, 1993, as amended at 58 FR 34536, June 28, 1993; 59 FR 16290, Apr. 6, 1994; 62 FR 54717, Oct. 21, 1997]

§ 86.098–24 Test vehicles and engines.

Section 86.098–24 includes text that specifies requirements that differ from

§ 86.096–24. Where a paragraph in § 86.096–24 is identical and applicable to § 86.098–24, this may be indicated by specifying the corresponding paragraph and the statement ''[Reserved]. For guidance see § 86.096–24.''

(a) introductory text through (a)(4) [Reserved]. For guidance see § 86.096–24.

(a)(5) The gasoline-fueled and methanol-fueled light-duty vehicles and light-duty trucks covered by an application for certification will be divided into groupings which are expected to have similar evaporative and/or refueling emission characteristics (as applicable) throughout their useful life. Each group of vehicles with similar evaporative and/or refueling emission characteristics shall be defined as a separate evaporative/refueling emission family.

(a)(6) For gasoline-fueled or methanol-fueled light-duty vehicles and light-duty trucks to be classed in the same evaporative/refueling emission family, vehicles must be similar with respect to the items listed in paragraphs (a)(6) (i) through (xii) of this section.

(i) Type of vapor storage device (e.g., canister, air cleaner, crankcase).

(ii) Basic canister design.

(A) Working capacity—grams adsorption within a 10g. range.

(B) System configuration—number of canisters and method of connection (i.e., series, parallel).

(C) Canister geometry, construction and materials.

(iii) Fuel system.

(iv) Type of refueling emission control system—non-integrated or integrated with the evaporative control system. Further, if the system is non-integrated, whether or not any other evaporative emissions, e.g. diurnal or hot soak emissions, are captured in the same storage device as the refueling emissions.

(v) Fillpipe seal mechanism—mechanical, liquid trap, other.

(vi) Fill limiter system.

(vii) Vapor control system or method of controlling vapor flow through the vapor line to the canister.

(viii) Vapor/liquid separator usage.

(ix) Purge system (valve, purge strategy and calibrations).

(x) Vapor hose diameter and material.

(xi) Canister location (front, rear, mid-vehicle).

(xii) Onboard diagnostic hardware and calibrations.

(a)(7) Where vehicles are of a type which cannot be divided into evaporative/refueling emission families based on the criteria listed above (such as non-canister control system approaches), the Administrator will establish families for those vehicles based upon the features most related to their evaporative and/or refueling emission characteristics.

(a)(8)–(b)(1)(vi) [Reserved]. For guidance see § 86.096–24.

(b)(1)(vii)(A) Vehicles of each evaporative/refueling emission family will be divided into evaporative/refueling emission control systems.

(B) The Administrator will select the vehicle expected to exhibit the highest evaporative and/or refueling emissions, from within each evaporative/refueling family to be certified, from among the vehicles represented by the exhaust emission-data selections for the engine family, unless evaporative and/or refueling testing has already been completed on the vehicle expected to exhibit the highest evaporative and/or refueling emissions for the evaporative/refueling family as part of another engine family's testing.

(C) If the vehicles selected in accordance with paragraph (b)(1)(vii)(B) of this section do not represent each evaporative/refueling emission control system then the Administrator will select the highest expected evaporative/refueling emission vehicle from within the unrepresented evaporative/refueling system.

(viii) For high-altitude evaporative and/or refueling emission compliance for each evaporative/refueling emission family, the manufacturer shall follow one of the following procedures:

(A) The manufacturer will select for testing under high-altitude conditions the one nonexempt vehicle previously selected under paragraph (b)(1)(vii)(B) or (b)(1)(vii)(C) of this section which is expected to have the highest level of evaporative and/or refueling emissions when operated at high altitude; or

(B) [Reserved]. For guidance see § 86.096–24.

(b)(ix)–(e)(2) [Reserved]. For guidance see § 86.096–24.

(f) *Carryover and carryacross of durability and emission data.* In lieu of testing an emission-data or durability vehicle (or engine) selected under paragraph (b)(1) (vii) through (viii) of this section and § 86.096–24 (b)(1) (i) through (vii) and (b)(2) through (c), and submitting data therefor, a manufacturer may, with the prior written approval of the Administrator, submit exhaust emission data, evaporative emission data and/or refueling emission data, as applicable on a similar vehicle (or engine) for which certification has been obtained or for which all applicable data required under § 86.098–23 has previously been submitted.

(g)–(h) [Reserved]. For guidance see § 86.096–24.

[59 FR 16290, Apr. 6, 1994]

§ 86.098–25 Maintenance.

Section 86.098–25 includes text that specifies requirements that differ from § 86.094–25. Where a paragraph in § 86.094–25 is identical and applicable to § 86.098–25, this may be indicated by specifying the corresponding paragraph and the statement ''[Reserved]. For guidance see § 86.094–25.''

(a)(1) [Reserved]. For guidance see § 86.094–25.

(a)(2) Maintenance performed on vehicles, engines, subsystems, or components used to determine exhaust, evaporative or refueling emission deterioration factors is classified as either emission- related or non-emission-related and each of these can be classified as either scheduled or unscheduled. Further, some emission-related maintenance is also classified as critical emission-related maintenance.

(b) introductory text through (b)(3)(vi)(D) [Reserved]. For guidance see § 86.094–25.

(b)(3)(vi)(E) Evaporative and/or refueling emission canister(s).

(F) Turbochargers.

(G) Carburetors.

(H) Superchargers.

(I) EGR System including all related filters and control valves.

(J) Mechanical fillpipe seals.

(b)(3)(vii)–(b)(6)(i)(E) [Reserved]. For guidance see § 86.094–25.

(b)(6)(i)(F) Evaporative and refueling emission control system components (excluding canister air filter).

(b)(6)(i)(G)–(h) [Reserved]. For guidance see § 86.094–25.

[59 FR 16291, Apr. 6, 1994]

§ 86.098–26 Mileage and service accumulation; emission measurements.

Section 86.098–26 includes text that specifies requirements that differ from § 86.094–26, § 86.095–26 or § 86.096–26. Where a paragraph in § 86.094–26, § 86.095–26 or § 86.096–26 is identical and applicable to § 86.098–26, this may be indicated by specifying the corresponding paragraph and the statement ''[Reserved]. For guidance see § 86.094–26.'' or ''[Reserved]. For guidance see § 86.095–26.'' or ''[Reserved]. For guidance see § 86.096–26.''.

(a)(1) and (2) [Reserved]. For guidance see § 86.094–26.

(a)(3) *Emission data vehicles.* Unless otherwise provided for in § 86.098–23(a), emission-data vehicles shall be operated and tested as described in paragraphs (a)(3)(i) and (ii)(C) of this section and § 86.094–26 (a)(3)(ii)(A), (B) and (D).

(i) *Otto-cycle.* (A) The manufacturer shall determine, for each engine family, the mileage at which the engine-system combination is stabilized for emission-data testing. The manufacturer shall maintain, and provide to the Administrator if requested, a record of the rationale used in making this determination. The manufacturer may elect to accumulate 4,000 miles on each test vehicle within an engine family without making a determination. The manufacturer must accumulate a minimum of 2,000 miles (3,219 kilometers) on each test vehicle within an engine family. All test vehicle mileage must be accurately determined, recorded, and reported to the Administrator. Any vehicle used to represent emission-data vehicle selections under § 86.098–24(b)(1) shall be equipped with an engine and emission control system that has accumulated the mileage the manufacturer chose to accumulate on the test vehicle. Fuel economy data generated from certification vehicles selected in accordance with § 86.098–

24(b)(1) with engine-system combinations that have accumulated more than 10,000 kilometers (6,200 miles) shall be factored in accordance with 40 CFR 600.006–87(c). Complete exhaust, evaporative and refueling (if required) emission tests shall be conducted for each emission-data vehicle selection under § 86.098–24(b)(1). The Administrator may determine under § 86.094–24(f) that no testing is required.

(B) [Reserved]. For guidance see § 86.094–26.

(C) Exhaust, evaporative and refueling emissions tests for emission-data vehicle(s) selected for testing under § 86.096–24(b)(1) (i), (ii), (iii) or (iv) or § 86.098–24(b)(1)(vii)(B) shall be conducted at the mileage (2,000 mile minimum) at which the engine-system combination is stabilized for emission testing under low-altitude conditions.

(a)(3)(i)(D)–(a)(3)(ii)(B) [Reserved]. For guidance see § 86.094–26.

(a)(3)(ii)(C) Exhaust, evaporative and refueling emissions tests (as required) for emission-data vehicle(s) selected for testing under § 86.096–24(b)(1) (i), (ii), (iii), or (iv), or § 86.098–24 (b)(1)(vii)(B) shall be conducted at the mileage (2,000 mile minimum) at which the engine-system combination is stabilized for emission testing under low-altitude conditions.

(a)(3)(ii)(D)–(b)(4)(i)(C) [Reserved]. For guidance see § 86.094–26.

(b)(4)(i)(D)–(b)(4)(ii)(D) [Reserved]. For guidance see § 86.095–26.

(b)(4)(iii) [Reserved]

(b)(4)(iv)–(c)(3) [Reserved]. For guidance see § 86.094–26.

(c)(4) [Reserved]. For guidance see § 86.096–26.

(d) [Reserved]. For guidance see § 86.094–26.

[59 FR 16291, Apr. 6, 1994, as amended at 60 FR 43888, Aug. 23, 1995]

§ 86.098–28 Compliance with emission standards.

Section 86.098–28 includes text that specifies requirements that differ from § 86.094–28. Where a paragraph in § 86.094–28 is identical and applicable to § 86.098–28, this may be indicated by specifying the corresponding paragraph and the statement ''[Reserved]. For guidance see § 86.094–28.''

(a)(1) Paragraph (a) of this section applies to light-duty vehicles.

(2) Each exhaust, evaporative and refueling emission standard (and family particulate emission limits, as appropriate) of § 86.098–8 applies to the emissions of vehicles for the appropriate useful life as defined in §§ 86.098–2 and 86.098–8.

(3) [Reserved]. For guidance see § 86.094–28.

(4) The procedure for determining compliance of a new motor vehicle with exhaust, evaporative and/or refueling emission standards (or family particulate emission limit, as appropriate) is as described in paragraphs (a)(4)(i) introductory text, (a)(4)(i)(C), (a)(4)(ii)(B) and (C), (a)(4)(iii), (a)(4)(v), (f) and (g) of this section and § 86.094–28 (a)(4)(i)(A) and (B), (a)(4)(ii)(A), (a)(4)(iv)) except where specified by paragraph (a)(7) of this section for the Production AMA Durability Program.

(i) Separate emission deterioration factors shall be determined from the exhaust emission results of the durability-data vehicle(s) for each engine-system combination. Separate evaporative and/or refueling emission deterioration factors shall be determined for each evaporative/refueling emission family-emission control system combination from the testing conducted by the manufacturer (gasoline-fueled and methanol-fueled vehicles only). Separate refueling emission deterioration factors shall be determined for each evaporative/refueling emission family-emission control system combination from the testing conducted by the manufacturer (petroleum-fueled diesel cycle vehicles not certified under the provisions of paragraph (g) of this section only).

(a)(4)(i)(A) and (a)(4)(i)(B) [Reserved]. For guidance see § 86.094–28.

(a)(4)(i)(C) *Evaporative deterioration factor determination.* An evaporative emissions deterioration factor (gasoline-fueled and methanol-fueled vehicles only) shall be determined from the testing conducted as described in § 86.094–21(b)(4)(i)(A), and in accordance with paragraphs (a)(4)(i)(C) (*1*) and (*2*) of this section, for each evaporative/refueling emission family-emission control system combination to indicate the evaporative emission level at the

applicable useful life relative to the evaporative emission level at 4,000 miles as follows:

(*1*) Factor = Evaporative emission level at the useful life mileage for that standard minus the evaporative emission level at 4,000 miles.

(*2*) The factor shall be established to a minimum of two places to the right of the decimal.

(D) A refueling emissions deterioration factor (gasoline-fueled, methanol-fueled and petroleum-fueled diesel-cycle vehicles not certified under the provisions of paragraph (g) of this section) shall be determined from testing conducted and described in § 86.098–21(b)(4)(i)(B) for each evaporative/refueling emission family-emission control system combinationto indicate the refueling emission level at the applicable usefule life relative to the refueling emission level at 4,000 miles as follows:

(*1*) Factor = Refueling emission level at the useful life mileage for that standard minus the refueling emission level at 4,000 miles.

(*2*) The factor shall be established to a minimum of two places to the right of the decimal.

(a)(4)(ii)(A) [Reserved]. For guidance see § 86.094–28.

(a)(4)(ii)(B) The official evaporative emission test results (gasoline-fueled and methanol-fueled vehicles only) for each evaporative emission-data vehicle at the selected test point shall be adjusted by addition of the appropriate deterioration factor: *Provided,* that if a deterioration factor as computed in paragraph (a)(4)(i)(C) of this section is less than zero, that deterioration factor shall be zero for the purposes of this paragraph.

(C) The official refueling emission test results (gasoline-fueled, methanol-fueled, and petroleum-fueled diesel cycle vehicles not certified under the provisions of paragraph (g) of this section) for each refueling emission-data vehicle at the selected test point shall be adjusted by addition of the appropriate deterioration factor: *Provided,* that if a deterioration factor as computed in paragraph (a)(4)(i)(D) of this section is less than zero, that deterioration factor shall be zero for purposes of this paragraph.

(iii) The emissions to compare with the standard (or the family particulate emission limit, as appropriate) shall be the adjusted emissions of paragraphs (a)(4)(ii) (B) and (C) of this section and § 86.094–28 (a)(4)(ii)(A) for each emission-data vehicle. Before any emission value is compared with the standard (or the family particulate emission limit, as appropriate), it shall be rounded, in accordance with ASTM E 29–67, (reapproved 1980) (as referenced in § 86.094–28(a)(4)(i)(B)(*2*)(*ii*)), to two significant figures. The rounded emission values may not exceed the standard (or the family particulate emission limit, as appropriate).

(iv) [Reserved]. For guidance see § 86.094–28.

(v) Every test vehicle of an evaporative/refueling emission family must comply with the evaporative and/or refueling emission standards, as determined in paragraph (a)(4)(iii) of this section, before any vehicle in that family may be certified.

(a)(5)–(a)(6) [Reserved]. For guidance see § 86.094–28.

(a)(7) The procedure to determine the compliance of new motor vehicles in the Production AMA Durability Program described in § 86.094–13 is the same as described in paragraphs (a)(4)(iii) and (v) of this section and § 86.094–28 (a)(4)(iv). For the engine families that are included in the Production AMA Durability Program, the exhaust emission deterioration factors used to determine compliance shall be those that the Administrator has approved under § 86.094–13. The evaporative emission deterioration factor for each evaporative /refueling emission family shall be determined and applied according to paragraph (a)(4)(ii)(B) of this section. The refueling emission deterioration factor for each evaporative/refueling emission family shall be determined and applied according to paragraph (a)(4)(ii)(C) of this section. The procedures to determine the minimum exhaust emission deterioration factors required under § 86.094–13(d) are as described in paragraph (a)(7)(i) of this section and § 86.094–28 (a)(7)(ii).

(i) Separate deterioration factors shall be determined from the exhaust emission results of the durability data

vehicles for each emission standard applicable under § 86.098–8, for each engine family group. The evaporative and/or refueling emission deterioration factors for each evaporative/refueling family will be determined and applied in accordance with paragraph (a)(4) of this section.

(a)(7)(ii)–(d) [Reserved]. For guidance see § 86.094–28.

(e) [Reserved]

(f) *Fuel dispensing spitback testing waiver*. (1) Vehicles certified to the refueling emission standards set forth in § 86.098–8 are not required to demonstrate compliance with the fuel dispensing spitback standard contained in that section: *Provided*, that—

(i) The manufacturer certifies that the vehicle inherently meets the Dispensing Spitback Standard as part of compliance with the refueling emission standard; and

(ii) This certification is provided in writing and applies to the full useful life of the vehicle.

(2) EPA retains the authority to require testing to enforce compliance and to prevent non-compliance with the Fuel Dispensing Spitback Standard.

(g) *Inherently low refueling emission testing waiver*. (1) Vehicles using fuels/fuel systems inherently low in refueling emissions are not required to conduct testing to demonstrate compliance with the refueling emission standards set forth in § 86.098–8: *Provided*, that—

(i) This provision is only available for petroleum diesel fuel. It is only available if the Reid Vapor Pressure of in-use diesel fuel is equal to or less than 1 psi (7 kPa) and for diesel vehicles whose fuel tank temperatures do not exceed 130 °F (54 °C); and

(ii) To certify using this provision the manufacturer must attest to the following evaluation: ''Due to the low vapor pressure of diesel fuel and the vehicle tank temperatures, hydrocarbon vapor concentrations are low and the vehicle meets the 0.20 grams/gallon refueling emission standard without a control system.''

(2) The certification required in paragraph (g)(1)(ii) of this section must be provided in writing and must apply for the full useful life of the vehicle.

(3) EPA reserves the authority to require testing to enforce compliance and to prevent noncompliance with the refueling emission standard.

(4) Vehicles certified to the refueling emission standard under this provision shall not be counted in the sales percentage compliance determinations for the 1988, 1989 and subsequent model years.

(h) *Fixed liquid level gauge waiver*. Liquefied petroleum gas-fueled vehicles which contain fixed liquid level gauges or other gauges or valves which can be opened to release fuel or fuel vapor during refueling, and which are being tested for refueling emissions, are not required to be tested with such gauges or valves open, as outlined in § 86.157–98(d)(2), provided the manufacturer can demonstrate, to the satisfaction of the Administrator, that such gauges or valves would not be opened during refueling in-use due to inaccessibility or other design features that would prevent or make it very unlikely that such gauges or valves could be opened.

[59 FR 16292, Apr. 6, 1994, as amended at 59 FR 48503, Sept. 21, 1994]

§ 86.098–30 Certification.

Section 86.098–30 includes text that specifies requirements that differ from § 86.094–30, § 86.095–30 or § 86.096–30. Where a paragraph in § 86.094–30, § 86.095–30 or § 86.096–30 is identical and applicable to § 86.098–30. This may be indicated by specifying the corresponding paragraph and the statement ''[Reserved]. For guidance see § 86.094–30.'' or ''[Reserved]. For guidance see § 86.095–30.'' or ''[Reserved]. For guidance see § 86.096–30.''.

(a)(1) and (a)(2) [Reserved]. For guidance see § 86.094–30.

(a)(3)(i) One such certificate will be issued for each engine family. For gasoline-fueled and methanol-fueled light-duty vehicles and light duty-trucks and petroleum-fueled diesel-cycle light-duty vehicles and light duty-trucks not certified under § 86.098–28(g), one such certificate will be issued for each engine family-evaporative/refueling emission family combination. Each certificate will certify compliance with no more than one set of in-use and certification standards (or family emission limits, as appropriate).

(a)(3)(ii)–(a)(4)(ii) [Reserved]. For guidance see § 86.095–30.

(a)(4)(iii) introductory text through (a)(4)(iii)(C) [Reserved]. For guidance see § 86.094–30.

(a)(4)(iv) introductory text [Reserved]. For guidance see § 86.095–30.

(a)(4)(iv)(A)–(a)(9) [Reserved]. For guidance see § 86.094–30.

(a)(10)(i) For diesel-cycle light-duty vehicle and diesel-cycle light-duty truck families which are included in a particulate averaging program, the manufacturer's production-weighted average of the particulate emission limits of all engine families in a participating class or classes shall not exceed the applicable diesel-cycle particulate standard, or the composite particulate standard defined in § 86.090–2 as appropriate, at the end of the model year, as determined in accordance with this part. The certificate shall be void ab initio for those vehicles causing the production-weighted FEL to exceed the particulate standard.

(ii) For all heavy-duty diesel-cycle engines which are included in the particulate ABT programs under §§ 86.094–15, 86.098–15, or superseding ABT sections, the provisions of paragraphs (a)(10)(ii) (A) through (C) of this section apply.

(A) All certificates issued are conditional upon the manufacturer complying with all applicable ABT provisions and the ABT related provisions of other applicable sections, both during and after the model year production.

(B) Failure to comply with all applicable ABT provisions will be considered to be a failure to satisfy the conditions upon which the certificate was issued, and the certificate may be deemed void ab initio.

(C) The manufacturer shall bear the burden of establishing to the satisfaction of the Administrator that the conditions upon which the certificate was issued were satisfied or excused.

(11)(i) For light-duty truck families which are included in a NO_X averaging program, the manufacturer's production-weighted average of the NO_X emission limits of all such engine families shall not exceed the applicable NO_X emission standard, or the composite NO_X emission standard defined in § 86.088–2, as appropriate, at the end of the model year, as determined in accordance with this part. The certificate shall be void ab initio for those vehicles causing the production-weighted FEL to exceed the NO_X standard.

(ii) For all HDEs which are included in the NO_X or NO_X plus NMHC ABT programs under § 86.098–15 or superseding ABT sections, the provisions of paragraphs (a)(11)(ii) (A) through (C) of this section apply.

(A) All certificates issued are conditional upon the manufacturer complying with all applicable ABT provisions and the ABT related provisions of other applicable sections, both during and after the model year production.

(B) Failure to comply with all applicable ABT provisions will be considered to be a failure to satisfy the conditions upon which the certificate was issued, and the certificate may be deemed void ab initio.

(C) The manufacturer shall bear the burden of establishing to the satisfaction of the Administrator that the conditions upon which the certificate was issued were satisfied or excused.

(a)(12) [Reserved]. For guidance see § 86.094–30.

(a)(13) [Reserved]. For guidance see § 86.095–30.

(a)(14) [Reserved]. For guidance see § 86.094–30.

(a)(15)–(18) [Reserved]. For guidance see § 86.096–30.

(a)(19) For all light-duty vehicles certified to refueling emission standards under § 86.098–8, the provisions of paragraphs (a)(19) (i) through (iii) of this section apply.

(i) All certificates issued are conditional upon the manufacturer complying with all provisions of § 86.098–8, both during and after model year production.

(ii) Failure to meet the required implementation schedule sales percentages as specified in § 86.094–8 be considered to be a failure to satisfy the conditions upon which the certificate(s) was issued and the vehicles sold in violation of the implementation schedule shall not be covered by the certificate.

(iii) The manufacturer shall bear the burden of establishing to the satisfaction of the Administrator that the conditions upon which the certificate was issued were satisfied.

(b)(1) introductory text through (b)(1)(i)(B) [Reserved]. For guidance see § 86.094–30.

(b)(1)(i)(C) The emission-data vehicle(s) selected under § 86.098–24(b)(1)(vii)(A) and (B) shall represent all vehicles of the same evaporative/refueling control system within the evaporative /refueling family.

(b)(1)(ii)–(b)(1)(iv) [Reserved]. For guidance see § 86.094–30.

(b)(2) The Administrator will proceed as in paragraph (a) of this section with respect to the vehicles (or engines) belonging to an engine family or engine family-evaporative/refueling emission family combination (as applicable), all of which comply with all applicable standards (or family emission limits, as appropriate).

(b)(3)–(b)(4)(i) [Reserved]. For guidance see § 86.094–30.

(b)(4)(ii) Remove the vehicle configuration (or evaporative/refueling vehicle configuration, as applicable) which failed, from his application:

(b)(4)(ii)(A) [Reserved]. For guidance see § 86.094–30.

(b)(4)(ii)(B) If the failed vehicle was tested for compliance with one or more of the exhaust, evaporative and refueling emission standards: The Administrator may select, in place of the failed vehicle, in accordance with the selection criteria employed in selecting the failed vehicle, a new emission data vehicle which will be tested for compliance with all of the applicable emission standards. If one vehicle cannot be selected in accordance with the selection criteria employed in selecting the failed vehicle, then two or more vehicles may be selected (e.g., one vehicle to satisfy the exhaust emission vehicle selection criteria and one vehicle to satisfy the evaporative and refueling emission vehicle selection criteria). The vehicle selected to satisfy the exhaust emission vehicle selection criteria will be tested for compliance with exhaust emission standards (or family emission limits, as appropriate) only. The vehicle selected to satisfy the evaporative and/or refueling emission vehicle selection criteria will be tested for compliance with exhaust, evaporative and/or refueling emission standards; or

(iii) Remove the vehicle configuration (or evaporative/refueling vehicle configuration, as applicable) which failed from the application and add a vehicle configuration(s) (or evaporative/refueling vehicle configuration(s), as applicable) not previously listed. The Administrator may require, if applicable, that the failed vehicle be modified to the new engine code (or evaporative/refueling emission code, as applicable) and demonstrate by testing that it meets applicable standards (or family emission limits, as appropriate) for which it was originally tested. In addition, the Administrator may select, in accordance with the vehicle selection criteria given in § 86.001–24(b), a new emission data vehicle or vehicles. The vehicles selected to satisfy the exhaust emission vehicle selection criteria will be tested for compliance with exhaust emission standards (or family emission limits, as appropriate) only. The vehicles selected to satisfy the evaporative emission vehicle selection criteria will be tested for compliance with all of the applicable emission standards (or family emission limits, as appropriate); or

(iv) Correct a component or system malfunction and show that with a correctly functioning system or component the failed vehicle meets applicable standards (or family emission limits, as appropriate) for which it was originally tested. The Administrator may require a new emission data vehicle, of identical vehicle configuration (or evaporative/refueling vehicle configuration, as applicable) to the failed vehicle, to be operated and tested for compliance with the applicable standards (or family emission limits, as appropriate) for which the failed vehicle was originally tested.

(b)(5)–(e) [Reserved]. For guidance see § 86.094–30.

(f) introductory text through (f)(3) [Reserved]. For guidance see § 86.095–30.

(f)(4) The electronic evaporative and/or refueling purge control device (if equipped) or any emission-related powertrain component connected to a computer is electrically disconnected.

[59 FR 16293, Apr. 6, 1994, as amended at 62 FR 54719, Oct. 21, 1997]

§ 86.098–35 Labeling.

Section 86.098–35 includes text that specifies requirements that differ from §§ 86.095–35 and 86.096–35. Where a paragraph in § 86.095–35 or § 86.096–35 is identical and applicable to § 86.098–35, this may be indicated by specifying the corresponding paragraph and the statement ''[Reserved]. For guidance see § 86.095–35.'' or ''[Reserved]. For guidance see § 86.096–35.''.

(a) introductory text through (a)(1)(iii)(B) [Reserved]. For guidance see § 86.095–35.

(a)(1)(iii)(C) Engine displacement (in cubic inches or liters), engine family identification and evaporative/refueling family identification.

(a)(1)(iii)(D)–(L) [Reserved]. For guidance see § 86.095–35.

(a)(1)(iii)(M) For model year 1998 light-duty vehicles, a clear indication of which test procedure was used to certify the evaporative/refueling family, e.g., ''Evaporative /refueling Family xx (§ 86.130–96 procedures)'' or ''Evaporative /refueling Family xx (§ 86.130–78 procedures).''

(a)(1)(iii)(N) [Reserved]. For guidance see § 86.096–35.

(a)(2) heading through (a)(2)(iii)(K) [Reserved]. For guidance see § 86.095–35.

(a)(2)(iii)(L) [Reserved]

(a)(2)(iii)(M)–(a)(2)(iii)(N) [Reserved]. For guidance see § 86.095–35.

(a)(2)(iii)(O)–(a)(2)(iii)(P) [Reserved]. For guidance see § 86.096–35.

(a)(3) heading through (a)(4)(iii)(F) [Reserved]. For guidance see § 86.095–35.

(a)(4)(iii)(G) [Reserved]. For guidance see § 86.096–35.

(b)–(i) [Reserved]. For guidance see § 86.095–35.

(j) The Administrator may approve in advance other label content and formats provided the alternative label contains information consistent with this section.

[59 FR 16294, Apr. 6, 1994, as amended at 70 FR 72927, Dec. 8, 2005]

§ 86.099–1 General applicability.

Section 86.099–1 includes text that specifies requirements that differ from those specified in § 86.094–1. Where a paragraph in § 86.094–1 is identical and applicable to § 86.099–1, this may be indicated by specifying the corresponding paragraph and the statement ''[Reserved]. For guidance see § 86.094–1.''.

(a)–(b) [Reserved]. For guidance see § 86.094–1.

(c) *National Low Emission Vehicle Program for light-duty vehicles and light light-duty trucks.* A manufacturer may elect to certify 1999 and later model year light-duty vehicles and light light-duty trucks to the provisions of the National Low Emission Vehicle Program contained in subpart R of this part. Subpart R of this part is applicable only to those manufacturers that opt into the National Low Emission Vehicle Program, under the provisions of that subpart, and that have not exercised a valid opt-out from the National Low Emission Vehicle Program, which opt-out has gone into effect under the provisions of § 86.1707. All provisions of this subpart are applicable to vehicles certified pursuant to subpart R of this part, except as specifically noted in subpart R of this part.

(d) [Reserved]

(e)–(f) [Reserved]. For guidance see § 86.094–1.

[63 FR 965, Jan. 7, 1998]

§ 86.099–8 Emission standards for 1999 and later model year light-duty vehicles.

Section 86.099–8 includes text that specifies requirements that differ from § 86.096–8. Where a paragraph in § 86.096–8 is identical and applicable to § 86.099–8, this may be indicated by specifying the corresponding paragraph and the statement ''[Reserved]. For guidance see § 86.096–8.''

(a)(1)–(a)(1)(ii)(B) [Reserved]. For guidance see § 86.096–8.

(iii) CST emissions from gasoline-fueled Otto-cycle light-duty vehicles measured and calculated in accordance with subpart O of this part may not exceed the standards listed in paragraphs (a)(1)(iii) (A) and (B) of this section.

(A) Hydrocarbons: 100 ppm as hexane.

(B) Carbon monoxide: 0.5%.

(2) [Reserved]

(3) The standards set forth in paragraph (a)(1)(iii) of this section refer to the exhaust emitted during the CST as set forth in subpart O of this part and measured and calculated in accordance with those provisions.

(b) Evaporative emissions from light-duty vehicles shall not exceed the following standards. The standards apply equally to certification and in-use vehicles. The spitback standard also applies to newly assembled vehicles. For certification vehicles only, manufacturers may conduct testing to quantify a level of nonfuel background emissions for an individual test vehicle. Such a demonstration must include a description of the source(s) of emissions and an estimated decay rate. The demonstrated level of nonfuel background emissions may be subtracted from emission test results from certification vehicles if approved in advance by the Administrator.

(1) *Hydrocarbons (for gasoline-fueled, natural gas-fueled, and liquefied petroleum gas-fueled vehicles).* (i)(A) For the full three-diurnal test sequence described in § 86.130–96, diurnal plus hot soak measurements: 2.0 grams per test.

(B) *For the supplemental two-diurnal test sequence described in § 86.130–96, diurnal plus hot soak emissions (gasoline-fueled vehicles only): 2.5 grams per test.*

(ii) *Running loss test (gasoline-fueled vehicles only):* 0.05 grams per mile.

(iii) *Fuel dispensing spitback test (gasoline-fueled vehicles only):* 1.0 grams per test.

(2) *Total Hydrocarbon Equivalent (for methanol-fueled vehicles).* (i)(A) For the full three-diurnal test sequence described in § 86.130–96, diurnal plus hot soak measurements: 2.0 grams carbon per test.

(B) For the supplemental two-diurnal test sequence described in § 86.130–96, diurnal plus hot soak measurements: 2.5 grams carbon per test.

(ii) Running loss test: 0.05 grams carbon per mile.

(iii) Fuel dispensing spitback test: 1.0 gram carbon per test.

(3) The standards set forth in paragraphs (b) (1) and (2) of this section refer to a composite sample of evaporative emissions collected under the conditions and measured in accordance with the procedures set forth in subpart B of this part.

(4) All fuel vapor generated in a gasoline- or methanol-fueled light-duty vehicle during in-use operations shall be routed exclusively to the evaporative control system (e.g., either canister or engine purge). The only exception to this requirement shall be for emergencies.

(5) [Reserved]. For guidance see § 86.096–8.

(6) Vehicles certified to the refueling standards set forth in paragraph (d) of this section are not required to demonstrate compliance with the Fuel Dispensing Spitback standards contained in paragraphs (b)(1)(iii) and (b)(2)(iii) of this section: *Provided,* that they meet the requirements of § 86.098–28(f).

(c) [Reserved]. For guidance see § 86.096–8.

(d) Refueling emissions from 1999 and later model year gasoline-fueled and methanol-fueled Otto-cycle and petroleum-fueled and methanol-fueled diesel-cycle light duty vehicles shall not exceed the following standards. The standards apply equally to certification and in-use vehicles.

(1) *Standards*—(i) *Hydrocarbons (for gasoline-fueled Otto* gallon (0.053 gram per liter) of fuel dispensed.

(ii) *Total Hydrocarbon Equivalent (for methanol-fueled vehicles).* 0.20 gram per gallon (0.053 gram per liter) of fuel dispensed.

(iii) *Hydrocarbons (for liquefied petroleum gas-fueled vehicles).* 0.15 gram per gallon (0.04 gram per liter) of fuel dispensed.

(iv) *Refueling receptacle (for natural gas-fueled vehicles).* Refueling receptacles on natural gas-fueled vehicles shall comply with the receptacle provisions of the ANSI/AGA NGV1–1994 standard (as incorporated by reference in § 86.1).

(2)(i) The standards set forth in paragraphs (d)(1)(i) and (ii) of this section refer to a sample of refueling emissions collected under the conditions set forth in subpart B of this part and measured in accordance with those procedures.

(ii) For vehicles powered by petroleum-fueled diesel-cycle engines, the provisions set forth in paragraph (d)(1)(i) of this section may be waived: *Provided,* that the manufacturer complies with the provisions of § 86.098–28(f) of this subpart.

(3)(i) A minimum of the percentage shown in table A99–08 of a manufacturer's sales of the applicable model year's gasoline- and methanol-fueled Otto-cycle and petroleum- and methanol-

fueled diesel cycle light-duty vehicles shall be tested under the procedures in subpart B of this part indicated for 1998 and later model years, and shall not exceed the standards described in paragraph (d)(1) of this section. Vehicles certified in accordance with paragraph (d)(2)(ii) of this section, as determined by the provisions of § 86.098–28(g), shall not be counted in the calculation of the percentage of compliance.

TABLE A99–08—IMPLEMENTATION SCHEDULE FOR LIGHT-DUTY VEHICLE REFUELING EMISSION TESTING

Model year	Sales percentage
1999	80
2000 and subsequent	100

(ii) Small volume manufacturers, as defined in § 86.094–14(b) (1) and (2), are exempt from the implementation schedule of table A99–08 of this section for model year 1999. For small volume manufacturers, the standards of paragraph (d) of this section, and the associated test procedures, shall not apply until model year 2000, when 100 percent compliance with the standards of this section is required. This exemption does not apply to small volume engine families as defined in § 86.094–14(b)(5).

(e)–(f) [Reserved]

(g)–(k) [Reserved]. For guidance see § 86.096–8.

[58 FR 16025, Mar. 24, 1993, as amended at 58 FR 58421, Nov. 1, 1993; 58 FR 16294, Apr. 6, 1994; 59 FR 48503, Sept. 21, 1994; 60 FR 43888, Aug. 23, 1995]

§ 86.099–9 Emission standards for 1999 and later model year light-duty trucks.

Section 86.099–9 includes text that specifies requirements that differ from § 86.097–9. Where a paragraph in § 86.097–9 is identical and applicable to § 86.099–9, this may be indicated by specifying the corresponding paragraph and the statement ''[Reserved]. For guidance see § 86.097–9.'' Where a corresponding paragraph of § 86.097–9 is not applicable, this is indicated by the statement ''[Reserved].''

(a)(1)–(a)(1)(iii)(2) [Reserved]. For guidance see § 86.097–9.

(iv) CST emissions from gasoline-fueled Otto-cycle light-duty trucks measured and calculated in accordance with subpart O of this part may not exceed the standards listed in paragraphs (a)(1)(iv) (A) and (B) of this section.

(A) Hydrocarbons: 100 ppm as hexane.

(B) Carbon monoxide: 0.5%.

(2) [Reserved]

(3) The standards set forth in paragraph (a)(1)(iv) of this section refer to the exhaust emitted during the CST as set forth in subpart O of this part and measured and calculated in accordance with those provisions.

(b) Evaporative emissions from light-duty trucks shall not exceed the following standards. The standards apply equally to certification and in-use vehicles. The spitback standard also applies to newly assembled vehicles. For certification vehicles only, manufacturers may conduct testing to quantify a level of nonfuel background emissions for an individual test vehicle. Such a demonstration must include a description of the source(s) of emissions and an estimated decay rate. The demonstrated level of nonfuel background emissions may be subtracted from emission test results from certification vehicles if approved in advance by the Administrator.

(1) *Hydrocarbons (for gasoline-fueled, natural gas-fueled, and liquefied petroleum gas-fueled vehicles).* (i)(A) For gasoline-fueled heavy light-duty trucks with a nominal fuel tank capacity of at least 30 gallons:

(*1*) For the full three-diurnal test sequence described in § 86.130–96, diurnal plus hot soak measurements: 2.5 grams per test.

(*2*) For the supplemental two-diurnal test sequence described in § 86.130–96, diurnal plus hot soak measurements: 3.0 grams per test.

(B) For all other light-duty trucks:

(*1*) For the full three-diurnal test sequence described in § 86.130–96, diurnal plus hot soak measurements: 2.0 grams per test.

(*2*) For the supplemental two-diurnal test sequence described in § 86.130–96, diurnal plus hot soak measurements (gasoline-fueled vehicles only): 2.5 grams per test.

(ii) *Running loss test (gasoline-fueled vehicles only):* 0.05 grams per mile.

(iii) *Fuel dispensing spitback test (gasoline-fueled vehicles only):* 1.0 grams per test.

(2) *Total Hydrocarbon Equivalent (for methanol-fueled vehicles).* (i)(A) For heavy light-duty trucks with nominal fuel tank capacity of at least 30 gallons:

(*1*) For the full three-diurnal test sequence described in § 86.130–96, diurnal plus hot soak measurements: 2.5 grams carbon per test.

(*2*) For the supplemental two-diurnal test sequence described in § 86.130–96, diurnal plus hot soak measurements: 3.0 grams carbon per test.

(B) For all other light-duty trucks:

(*1*) For the full three-diurnal test sequence described in § 86.130–96, diurnal plus hot soak measurements: 2.0 grams carbon per test.

(*2*) For the supplemental two-diurnal test sequence described in § 86.130–96, diurnal plus hot soak measurements: 2.5 grams carbon per test.

(ii) Running loss test: 0.05 grams carbon per mile.

(iii) Fuel dispensing spitback test: 1.0 gram carbon per test.

(3) The standards set forth in paragraphs (b) (1) and (2) of this section refer to a composite sample of evaporative emissions collected under the conditions and measured in accordance with the procedures set forth in subpart B of this part.

(4) All fuel vapor generated in a gasoline- or methanol-fueled light-duty truck during in-use operations shall be routed exclusively to the evaporative control system (e.g., either canister or engine purge). The only exception to this requirement shall be for emergencies.

(c) [Reserved]. For guidance see § 86.097–9.

(d)–(f) [Reserved]

(g)–(k) [Reserved]. For guidance see § 86.097–9.

[58 FR 16025, Mar. 24, 1993, as amended at 58 FR 58422, Nov. 1, 1993; 59 FR 48503, Sept. 21, 1994; 60 FR 43888, Aug. 23, 1995]

§ 86.099–10 Emission standards for 1999 and later model year Otto-cycle heavy-duty engines and vehicles.

Section 86.099–10 includes text that specifies requirements that differ from § 86.098–10. Where a paragraph in § 86.98–10 is identical and applicable to § 86.099–10, this may be indicated by specifying the corresponding paragraph and the statement ''[Reserved]. For guidance see § 86.098–10.''

(a) [Reserved]. For guidance see § 86.098–10.

(b) Evaporative emissions from heavy-duty vehicles shall not exceed the following standards. The standards apply equally to certification and in-use vehicles. The spitback standard also applies to newly assembled vehicles. For certification vehicles only, manufacturers may conduct testing to quantify a level of nonfuel background emissions for an individual test vehicle. Such a demonstration must include a description of the source(s) of emissions and an estimated decay rate. The demonstrated level of nonfuel background emissions may be subtracted from emission test results from certification vehicles if approved in advance by the Administrator.

(1) *Hydrocarbons (for vehicles equipped with gasoline-fueled, natural gas-fueled or liquefied petroleum gas-fueled engines).* (i) For vehicles with a Gross Vehicle Weight Rating of up to 14,000 lbs:

(A)(*1*) For the full three-diurnal test sequence described in § 86.1230–96, diurnal plus hot soak measurements: 3.0 grams per test.

(*2*) For the supplemental two-diurnal test sequence described in § 86.1230–96, diurnal plus hot soak measurements (gasoline-fueled vehicles only): 3.5 grams per test.

(B) Running loss test (gasoline-fueled vehicles only): 0.05 grams per mile.

(C) Fuel dispensing spitback test (gasoline-fueled vehicles only): 1.0 gram per test.

(ii) For vehicles with a Gross Vehicle Weight Rating of greater than 14,000 lbs:

(A)(*1*) For the full three-diurnal test sequence described in § 86.1230–96, diurnal plus hot soak measurements: 4.0 grams per test.

(*2*) For the supplemental two-diurnal test sequence described in § 86.1230–96, diurnal plus hot soak measurements (gasoline-fueled vehicles only): 4.5 grams per test.

(B) Running loss test (gasoline-fueled vehicles only): 0.05 grams per mile.

(2) *Total Hydrocarbon Equivalent (for vehicles equipped with methanol-fueled engines).* (i) For vehicles with a Gross Vehicle Weight Rating of up to 14,000 lbs:

(A)(*1*) For the full three-diurnal test sequence described in § 86.1230–96, diurnal plus hot soak measurements: 3.0 grams carbon per test.

(*2*) For the supplemental two-diurnal test sequence described in § 86.1230–96, diurnal plus hot soak measurements: 3.5 grams carbon per test.

(B) Running loss test: 0.05 grams carbon per mile.

(C) Fuel dispensing spitback test: 1.0 gram carbon per test.

(ii) For vehicles with a Gross Vehicle Weight Rating of greater than 14,000 lbs:

(A)(*1*) For the full three-diurnal test sequence described in § 86.1230–96, diurnal plus hot soak measurements: 4.0 grams carbon per test.

(*2*) For the supplemental two-diurnal test sequence described in § 86.1230–96, diurnal plus hot soak measurements: 4.5 grams carbon per test.

(B) Running loss test: 0.05 grams carbon per mile.

(3)(i) For vehicles with a Gross Vehicle Weight Rating of up to 26,000 lbs, the standards set forth in paragraphs (b)(1) and (b)(2) of this section refer to a composite sample of evaporative emissions collected under the conditions and measured in accordance with the procedures set forth in subpart M of this part.

(ii) For vehicles with a Gross Vehicle Weight Rating of greater than 26,000 lbs., the standards set forth in paragraphs (b)(1)(ii) and (b)(2)(ii) of this section refer to the manufacturer's engineering design evaluation using good engineering practice (a statement of which is required in § 86.091–23(b)(4)(ii)).

(4) All fuel vapor generated in a gasoline- or methanol-fueled heavy-duty vehicle during in-use operations shall be routed exclusively to the evaporative control system (e.g., either canister or engine purge). The only exception to this requirement shall be for emergencies.

(c) and (d) [Reserved]. For guidance see § 86.098–10.

(e) The standards described in this section do not apply to Otto-cycle medium-duty passenger vehicles (MDPVs) that are subject to regulation under subpart S of this part, except as specified in subpart S of this part. The standards described in this section also do not apply to Otto-cycle engines used in such MDPVs, except as specified in subpart S of this part. The term ''medium-duty passenger vehicle'' is defined in § 86.1803.

[58 FR 16026, Mar. 24, 1993, as amended at 59 FR 48503, Sept. 21, 1994; 60 FR 43888, Aug. 23, 1995; 65 FR 6848, Feb. 10, 2000]

§ 86.099–11 Emission standards for 1999 and later model year diesel heavy-duty engines and vehicles.

(a) Exhaust emissions from new 1999 and later model year diesel heavy-duty engines shall not exceed the following:

(1)(i) *Hydrocarbons (for diesel engines fueled with either petroleum-fuel or liquefied petroleum gas).* 1.3 grams per brake horsepower-hour (0.48 gram per megajoule), as measured under transient operating conditions.

(ii) *Total Hydrocarbon Equivalent (for methanol-fueled diesel engines).* 1.3 grams per brake horsepower-hour (0.48 gram per megajoule), as measured under transient operating conditions.

(iii) *Nonmethane hydrocarbons (for natural gas-fueled diesel engines).* 1.2 grams per brake horsepower-hour (0.45 gram per megajoule), as measured under transient operating conditions.

(2) *Carbon monoxide.* (i) 15.5 grams per brake horsepower-hour (5.77 grams per megajoule), as measured under transient operating conditions.

(ii) 0.50 percent of exhaust gas flow at curb idle (methanol-, natural gas-, and liquefied petroleum gas-fueled diesel only).

(3) *Oxides of Nitrogen.* (i) 4.0 grams per brake horsepower-hour (1.49 grams per megajoule), as measured under transient operating conditions.

(ii) A manufacturer may elect to include any or all of its diesel HDE families in any or all of the NO_X or NO_X plus NMHC ABT programs for HDEs, within the restrictions described in § 86.098–15 as applicable. If the manufacturer elects to include engine families in any of these programs, the NO_X FELs may not exceed 5.0 grams per brake horsepower-hour (1.9 grams per megajoule). This ceiling value applies

whether credits for the family are derived from averaging, trading or banking programs.

(4) *Particulate.* (i) For diesel engines to be used in urban buses, 0.05 gram per brake horsepower-hour (0.019 gram per megajoule) for certification testing and selective enforcement audit testing, and 0.07 gram per brake horsepower-hour (0.026 gram per megajoule) for in-use testing, as measured under transient operating conditions.

(ii) For all other diesel engines only, 0.10 gram per brake horsepower-hour (0.037 gram per megajoule), as measured under transient operating conditions.

(iii) A manufacturer may elect to include any or all of its diesel HDE families in any or all of the particulate ABT programs for HDEs, within the restrictions described in § 86.098–15 as applicable. If the manufacturer elects to include engine families in any of these programs, the particulate FEL may not exceed:

(A) For engine families intended for use in urban buses, 0.25 gram per brake horsepower-hour (0.093 gram per megajoule);

(B) For engine families *not* intended for use in urban buses, 0.60 gram per brake horsepower-hour (0.22 gram per megajoule). This ceiling value applies whether credits for the family are derived from averaging, trading or banking programs.

(b)(1) The opacity of smoke emission from new 1999 and later model year diesel heavy-duty engine shall not exceed:

(i) 20 percent during the engine acceleration mode.

(ii) 15 percent during the engine lugging mode.

(iii) 50 percent during the peaks in either mode.

(2) The standards set forth in paragraph (b)(1) of this section refer to exhaust smoke emissions generated under the conditions set forth in subpart I of this part and measured and calculated in accordance with those procedures.

(3) Evaporative emissions (total of non-oxygenated hydrocarbons plus methanol) from heavy-duty vehicles equipped with methanol-fueled diesel engines shall not exceed the following standards. The standards apply equally to certification and in-use vehicles. The spitback standard also applies to newly assembled vehicles.

(i) For vehicles with a Gross Vehicle Weight Rating of up to 14,000 lbs:

(A)(*1*) For the full three-diurnal test sequence described in § 86.1230–96, diurnal plus hot soak measurements: 3.0 grams per test.

(*2*) For the supplemental two-diurnal test sequence described in § 86.1230–96, diurnal plus hot soak measurements: 3.5 grams per test.

(B) *Running loss test:* 0.05 grams per mile.

(C) *Fuel dispensing spitback test:* 1.0 gram per test.

(ii) For vehicles with a Gross Vehicle Weight Rating of greater than 14,000 lbs:

(A)(*1*) For the full three-diurnal test sequence described in § 86.1230–96, diurnal plus hot soak measurements: 4.0 grams per test.

(*2*) For the supplemental two-diurnal test sequence described in § 86.1230–96, diurnal plus hot soak measurements: 4.5 grams per test.

(B) Running loss test: 0.05 grams per mile.

(iii)(A) For vehicles with a Gross Vehicle Weight Rating of up to 26,000 lbs, the standards set forth in paragraph (b)(3) of this section refer to a composite sample of evaporative emissions collected under the conditions and measured in accordance with the procedures set forth in subpart M of this part. For certification vehicles only, manufacturers may conduct testing to quantify a level of nonfuel background emissions for an individual test vehicle. Such a demonstration must include a description of the source(s) of emissions and an estimated decay rate. The demonstrated level of nonfuel background emissions may be subtracted from emission test results from certification vehicles if approved in advance by the Administrator.

(B) For vehicles with a Gross Vehicle Weight Rating of greater than 26,000 lbs., the standards set forth in paragraph (b)(3)(ii) of this section refer to the manufacturer's engineering design evaluation using good engineering practice (a statement of which is required in § 86.091–23(b)(4)(ii)).

(iv) All fuel vapor generated during in-use operations shall be routed exclusively to the evaporative control system (e.g., either canister or engine purge). The only exception to this requirement shall be for emergencies.

(4) *Evaporative emissions* from 1999 and later model year heavy-duty vehicles equipped with natural gas-fueled or liquefied petroleum gas-fueled heavy-duty engines shall not exceed the following standards. The standards apply equally to certification and in-use vehicles.

(i) For vehicles with a Gross Vehicle Weight Rating of up to 14,000 pounds for the full three-diurnal test sequence described in § 86.1230–96, diurnal plus hot soak measurements: 3.0 grams per test.

(ii) For vehicles with a Gross Vehicle Weight Rating of greater than 14,000 pounds for the full three-diurnal test sequence described in § 86.1230–96, diurnal plus hot soak measurements: 4.0 grams per test.

(iii)(A) For vehicles with a Gross Vehicle Weight Rating of up to 26,000 pounds, the standards set forth in paragraph (b)(4) of this section refer to a composite sample of evaporative emissions collected under the conditions set forth in subpart M of this part and measured in accordance with those procedures.

(B) For vehicles with a Gross Vehicle Weight Rating greater than 26,000 pounds, the standards set forth in paragraphs (b)(3)(ii) and (b)(4)(ii) of this section refer to the manufacturer's engineering design evaluation using good engineering practice (a statement of which is required in § 86.091–23(b)(4)(ii)).

(c) No crankcase emissions shall be discharged into the ambient atmosphere from any new 1999 or later model year methanol-, natural gas-, or liquefied petroleum gas-fueled diesel, or any naturally-aspirated diesel heavy-duty engine. For petroleum-fueled engines only, this provision does not apply to engines using turbochargers, pumps, blowers, or superchargers for air induction.

(d) Every manufacturer of new motor vehicle engines subject to the standards prescribed in this section shall, prior to taking any of the actions specified in section 203(a)(1) of the Act, test or cause to be tested motor vehicle engines in accordance with applicable procedures in subpart I or N of this part to ascertain that such test engines meet the requirements of paragraphs (a), (b), (c), and (d) of this section.

[58 FR 34537, June 28, 1993, as amended at 59 FR 48503, Sept. 21, 1994; 60 FR 43888, Aug. 23, 1995; 62 FR 54720, Oct. 21, 1997]

§ 86.099–17 Emission control diagnostic system for 1999 and later light-duty vehicles and light-duty trucks.

(a) All light-duty vehicles and light-duty trucks shall be equipped with an on-board diagnostic (OBD) system capable of monitoring, for each vehicle's useful life, all emission-related powertrain systems or components. All systems and components required to be monitored by these regulations shall be evaluated periodically, but no less frequently than once per Urban Dynamometer Driving Schedule as defined in Appendix I, paragraph (a), of this part, or similar trip as approved by the Administrator.

(b) *Malfunction descriptions.* The OBD system shall detect and identify malfunctions in all monitored emission-related powertrain systems or components according to the following malfunction definitions as measured and calculated in accordance with test procedures set forth in subpart B of this part, excluding those test procedures described in § 86.158–00. Paragraph (b)(1) of this section does not apply to diesel cycle light-duty vehicles or diesel cycle light-duty trucks, except where the catalyst is needed for NMHC control. Paragraphs (b)(2), (b)(3), and (b)(4) of this section do not apply to diesel cycle light-duty vehicles or diesel cycle light-duty trucks.

(1) Catalyst deterioration or malfunction before it results in an increase in NMHC emissions 1.5 times the NMHC standard, as compared to the NMHC emission level measured using a representative 4000 mile catalyst system.

(2) Engine misfire resulting in exhaust emissions exceeding 1.5 times the applicable standard for NMHC, CO or NO_X; and any misfire capable of damaging the catalytic converter.

(3) Oxygen sensor deterioration or malfunction resulting in exhaust emissions exceeding 1.5 times the applicable standard for NMHC, CO or NO_X.

(4) Any vapor leak in the evaporative and/or refueling system (excluding the tubing and connections between the purge valve and the intake manifold) greater than or equal in magnitude to a leak caused by a 0.040 inch diameter orifice; any absence of evaporative purge air flow from the complete evaporative emission control system. On vehicles with fuel tank capacity greater than 25 gallons, the Administrator may, following a request from the manufacturer, revise the size of the orifice to the smallest orifice feasible, based on test data, if the most reliable monitoring method available cannot reliably detect a system leak equal to a 0.040 inch diameter orifice.

(5) Any deterioration or malfunction occurring in a powertrain system or component directly intended to control emissions, including but not necessarily limited to, the exhaust gas recirculation (EGR) system, if equipped, the secondary air system, if equipped, and the fuel control system, singularly resulting in exhaust emissions exceeding 1.5 times the applicable emission standard for NMHC, CO or NO_X For vehicles equipped with a secondary air system, a functional check, as described in paragraph (b)(6) of this section, may satisfy the requirements of this paragraph provided the manufacturer can demonstrate that deterioration of the flow distribution system is unlikely. This demonstration is subject to Administrator approval and, if the demonstration and associated functional check are approved, the diagnostic system shall indicate a malfunction when some degree of secondary airflow is not detectable in the exhaust system during the check. For vehicles equipped with positive crankcase ventilation (PCV), monitoring of the PCV system is not necessary provided the manufacturer can demonstrate to the Administrator's satisfaction that the PCV system is unlikely to fail.

(6) Any other deterioration or malfunction occurring in an electronic emission-related powertrain system or component not otherwise described above that either provides input to or receives commands from the on-board computer and has a measurable impact on emissions; monitoring of components required by this paragraph shall be satisfied by employing electrical circuit continuity checks and rationality checks for computer input components (input values within manufacturer specified ranges), and functionality checks for computer output components (proper functional response to computer commands) except that the Administrator may waive such a rationality or functionality check where the manufacturer has demonstrated infeasibility; malfunctions are defined as a failure of the system or component to meet the electrical circuit continuity checks or the rationality or functionality checks.

(7) Oxygen sensor or any other component deterioration or malfunction which renders that sensor or component incapable of performing its function as part of the OBD system shall be detected and identified on vehicles so equipped.

(8) Alternatively, for model years 1999 and 2000, engine families may comply with the malfunction descriptions of § 86.098–17(a) and (b) in lieu of the malfunction descriptions in paragraphs (a) and (b) of this section. This alternative is not applicable after the 2000 model year.

(c) *Malfunction indicator light.* The OBD system shall incorporate a malfunction indicator light (MIL) readily visible to the vehicle operator. When illuminated, it shall display ''Check Engine,'' ''Service Engine Soon,'' a universally recognizable engine symbol, or a similar phrase or symbol approved by the Administrator. A vehicle shall not be equipped with more than one general purpose malfunction indicator light for emission-related problems; separate specific purpose warning lights (e.g. brake system, fasten seat belt, oil pressure, etc.) are permitted. The use of red for the OBD-related malfunction indicator light is prohibited.

(d) *MIL illumination.* The MIL shall illuminate and remain illuminated when any of the conditions specified in paragraph (b) of this section are detected and verified, or whenever the engine control enters a default or secondary mode of operation considered abnormal

for the given engine operating conditions. The MIL shall blink once per second under any period of operation during which engine misfire is occurring and catalyst damage is imminent. If such misfire is detected again during the following driving cycle (i.e., operation consisting of, at a minimum, engine start-up and engine shut-off) or the next driving cycle in which similar conditions are encountered, the MIL shall maintain a steady illumination when the misfire is not occurring and shall remain illuminated until the MIL extinguishing criteria of this section are satisfied. The MIL shall also illuminate when the vehicle's ignition is in the ''key-on'' position before engine starting or cranking and extinguish after engine starting if no malfunction has previously been detected. If a fuel system or engine misfire malfunction has previously been detected, the MIL may be extinguished if the malfunction does not reoccur during three subsequent sequential trips during which similar conditions are encountered (engine speed is within 375 rpm, engine load is within 20 percent, and the engine's warm-up status is the same as that under which the malfunction was first detected), and no new malfunctions have been detected. If any malfunction other than a fuel system or engine misfire malfunction has been detected, the MIL may be extinguished if the malfunction does not reoccur during three subsequent sequential trips during which the monitoring system responsible for illuminating the MIL functions without detecting the malfunction, and no new malfunctions have been detected. Upon Administrator approval, statistical MIL illumination protocols may be employed, provided they result in comparable timeliness in detecting a malfunction and evaluating system performance, i.e., three to six driving cycles would be considered acceptable.

(e) *Storing of computer codes.* The emission control diagnostic system shall record and store in computer memory diagnostic trouble codes and diagnostic readiness codes indicating the status of the emission control system. These codes shall be available through the standardized data link connector per SAE J1979 specifications incorporated by reference in paragraph (h) of this section.

(1) A diagnostic trouble code shall be stored for any detected and verified malfunction causing MIL illumination. The stored diagnostic trouble code shall identify the malfunctioning system or component as uniquely as possible. At the manufacturer's discretion, a diagnostic trouble code may be stored for conditions not causing MIL illumination. Regardless, a separate code should be stored indicating the expected MIL illumination status (i.e., MIL commanded ''ON,'' MIL commanded ''OFF'').

(2) For a single misfiring cylinder, the diagnostic trouble code(s) shall uniquely identify the cylinder, unless the manufacturer submits data and/or engineering evaluations which adequately demonstrate that the misfiring cylinder cannot be reliably identified under certain operating conditions. The diagnostic trouble code shall identify multiple misfiring cylinder conditions; under multiple misfire conditions, the misfiring cylinders need not be uniquely identified if a distinct multiple misfire diagnostic trouble code is stored.

(3) The diagnostic system may erase a diagnostic trouble code if the same code is not re-registered in at least 40 engine warm-up cycles, and the malfunction indicator light is not illuminated for that code.

(4) Separate status codes, or readiness codes, shall be stored in computer memory to identify correctly functioning emission control systems and those emission control systems which require further vehicle operation to complete proper diagnostic evaluation. A readiness code need not be stored for those monitors that can be considered continuously operating monitors (e.g., misfire monitor, fuel system monitor, etc.). Readiness codes should never be set to ''not ready'' status upon key-on or key-off; intentional setting of readiness codes to ''not ready'' status via service procedures must apply to all such codes, rather than applying to individual codes. Subject to Administrator approval, if monitoring is disabled for a multiple number of driving cycles (i.e., more than one) due to the

continued presence of extreme operating conditions (e.g., ambient temperatures below 40 °F, or altitudes above 8000 feet), readiness for the subject monitoring system may be set to ''ready'' status without monitoring having been completed. Administrator approval shall be based on the conditions for monitoring system disablement, and the number of driving cycles specified without completion of monitoring before readiness is indicated.

(f) *Available diagnostic data.* (1) Upon determination of the first malfunction of any component or system, ''freeze frame'' engine conditions present at the time shall be stored in computer memory. Should a subsequent fuel system or misfire malfunction occur, any previously stored freeze frame conditions shall be replaced by the fuel system or misfire conditions (whichever occurs first). Stored engine conditions shall include, but are not limited to: engine speed, open or closed loop operation, fuel system commands, coolant temperature, calculated load value, fuel pressure, vehicle speed, air flow rate, and intake manifold pressure if the information needed to determine these conditions is available to the computer. For freeze frame storage, the manufacturer shall include the most appropriate set of conditions to facilitate effective repairs. If the diagnostic trouble code causing the conditions to be stored is erased in accordance with paragraph (d) of this section, the stored engine conditions may also be erased.

(2) The following data in addition to the required freeze frame information shall be made available on demand through the serial port on the standardized data link connector, if the information is available to the on-board computer or can be determined using information available to the on-board computer: Diagnostic trouble codes, engine coolant temperature, fuel control system status (closed loop, open loop, other), fuel trim, ignition timing advance, intake air temperature, manifold air pressure, air flow rate, engine RPM, throttle position sensor output value, secondary air status (upstream, downstream, or atmosphere), calculated load value, vehicle speed, and fuel pressure. The signals shall be provided in standard units based on SAE specifications incorporated by reference in paragraph (h) of this section. Actual signals shall be clearly identified separately from default value or limp home signals.

(3) For all emission control systems for which specific on-board evaluation tests are conducted (catalyst, oxygen sensor, etc.), the results of the most recent test performed by the vehicle, and the limits to which the system is compared shall be available through the standardized data link connector per SAE J1979 specifications incorporated by reference in paragraph (h) of this section.

(4) Access to the data required to be made available under this section shall be unrestricted and shall not require any access codes or devices that are only available from the manufacturer.

(g) The emission control diagnostic system is not required to evaluate systems or components during malfunction conditions if such evaluation would result in a risk to safety or failure of systems or components. Additionally, the diagnostic system is not required to evaluate systems or components during operation of a power takeoff unit such as a dump bed, snow plow blade, or aerial bucket, etc.

(h) Incorporation by reference materials. The emission control diagnostic system shall provide for standardized access and conform with the following Society of Automotive Engineers (SAE) standards and/or the following International Standards Organization (ISO) standards. The following documents are incorporated by reference. This incorporation by reference was approved by the Director of the Federal Register in accordance with 5 U.S.C. 552(a) and 1 CFR part 51. Copies may be inspected at Docket No. A–90–35 at EPA's Air docket (LE–131), room 1500 M, 1st Floor, Waterside Mall, 401 M St., SW., Washington, DC, or at the National Archives and Records Administration (NARA). For information on the availability of this material at NARA, call 202–741–6030, or go to: *http://www.archives.gov/federal_register/code_of_federal_regulations/ibr_locations.html.*

(1) *SAE material.* Copies of these materials may be obtained from the Society of Automotive Engineers, Inc., 400 Commonwealth Drive, Warrendale, PA 15096–0001.

(i) SAE J1850 July 1995, ''Class B Data Communication Network Interface,'' shall be used as the on-board to off-board communications protocol. All emission related messages sent to the scan tool over a J1850 data link shall use the Cyclic Redundancy Check and the three byte header, and shall not use inter-byte separation or checksums.

(ii) Basic diagnostic data (as specified in § 86.094–17(e) and (f)) shall be provided in the format and units in SAE J1979 July 1996, E/E Diagnostic Test Modes.

(iii) Diagnostic trouble codes shall be consistent with SAE J2012 July 1996, ''Recommended Practices for Diagnostic Trouble Code Definitions.''

(iv) The connection interface between the OBD system and test equipment and diagnostic tools shall meet the functional requirements of SAE J1962 January 1995, ''Diagnostic Connector.''

(2) *ISO materials.* Copies of these materials may be obtained from the International Organization for Standardization, Case Postale 56, CH–1211 Geneva 20, Switzerland.

(i) ISO 9141–2 February 1994, ''Road vehicles—Diagnostic systems—Part 2: CARB requirements for interchange of digital information,'' may be used as an alternative to SAE J1850 as the on-board to off-board communications protocol.

(ii) [Reserved]

(i) *Deficiencies and alternate fueled vehicles.* Upon application by the manufacturer, the Administrator may accept an OBD system as compliant even though specific requirements are not fully met. Such compliances without meeting specific requirements, or deficiencies, will be granted only if compliance would be infeasible or unreasonable considering such factors as, but not limited to, technical feasibility of the given monitor, lead time and production cycles including phase-in or phase-out of engines or vehicle designs and programmed upgrades of computers, and if any unmet requirements are not carried over from the previous model year except where unreasonable hardware or software modifications would be necessary to correct the noncompliance, and the manufacturer has demonstrated an acceptable level of effort toward compliance as determined by the Administrator. Furthermore, EPA will not accept any deficiency requests that include the complete lack of a major diagnostic monitor (''major'' diagnostic monitors being those for the catalyst, oxygen sensor, engine misfire, and evaporative leaks), with the possible exception of the special provisions for alternate fueled vehicles. For alternate fueled vehicles (e.g., natural gas, liquefied petroleum gas, methanol, ethanol), beginning with the model year for which alternate fuel emission standards are applicable and extending through the 2004 model year, manufacturers may request the Administrator to waive specific monitoring requirements of this section for which monitoring may not be reliable with respect to the use of the alternate fuel. At a minimum, alternate fuel vehicles shall be equipped with an OBD system meeting OBD requirements to the extent feasible as approved by the Administrator.

(j) Demonstration of compliance with California OBD II requirements (Title 13 California Code Sec. 1968.1), as modified pursuant to California Mail Out #97–24 (December 9, 1997), shall satisfy the requirements of this section, except that compliance with Title 13 California Code Secs. 1968.1(b)(4.2.2), pertaining to evaporative leak detection, and 1968.1(d), pertaining to tampering protection, are not required to satisfy the requirements of this section, and the deficiency fine provisions of 1968.1(m)(6.1) and (6.2) shall not apply.

[63 FR 70694, Dec. 22, 1998]

§ 86.099–30 Certification.

This § 86.099–30 includes text that specifies requirements that differ from § 86.094–30, § 86.095–30, § 86.096–30, or § 86.098–30. Where a paragraph in § 86.094–30, § 86.095–30, § 86.096–30, or § 86.098–30 is identical and applicable to § 86.099–30, this may be indicated by specifying the corresponding paragraph and the statement ''[Reserved]. For

guidance see § 86.094–30.'' or ''[Reserved]. For guidance see § 86.095–30.'' or ''[Reserved]. For guidance see § 86.096–30.'' or ''[Reserved]. For guidance see § 86.098-30.''.

(a)(1) and (a)(2) [Reserved]. For guidance see § 86.094–30.

(a)(3)(i) [Reserved]. For guidance see § 86.098–30.

(a)(3)(ii) and (a)(4)(ii) [Reserved]. For guidance see § 86.095–30.

(a)(4)(iii) introductory text through (a)(4)(iii)(C) [Reserved]. For guidance see § 86.094–30.

(a)(4)(iv) introductory text [Reserved]. For guidance see § 86.095–30.

(a)(4)(iv)(A)–(a)(9) [Reserved]. For guidance see § 86.094–30.

(a)(10)(i)–(a)(11)(ii)(C) [Reserved]. For guidance see § 86.098–30.

(a)(12) [Reserved]. For guidance see § 86.094–30.

(a)(13) [Reserved]. For guidance see § 86.095–30.

(a)(14) [Reserved]. For guidance see § 86.094–30.

(a)(15)–(a)(18) [Reserved]. For guidance see § 86.096–30.

(a)(19) introductory text through (a)(19)(iii) [Reserved]. For guidance see § 86.098–30.

(b)(1) introductory text through (b)(1)(i)(B) [Reserved]. For guidance see § 86.094–30.

(b)(1)(i)(C) [Reserved]. For guidance see § 86.098–30.

(b)(1)(ii)–(b)(1)(iv) [Reserved]. For guidance see § 86.094–30.

(b)(2) [Reserved]. For guidance see § 86.098–30.

(b)(3)–(b)(4)(i) [Reserved]. For guidance see § 86.094–30.

(b)(4)(ii) [Reserved]. For guidance see § 86.098–30.

(b)(4)(ii)(A) [Reserved]. For guidance see § 86.094–30.

(b)(4)(ii)(B)–(b)(4)(iv) [Reserved]. For guidance see § 86.098–30.

(b)(5)–(e) [Reserved]. For guidance see § 86.094–30.

(f) For engine families required to have an emission control diagnostic system (an OBD system), certification will not be granted if, for any test vehicle approved by the Administrator in consultation with the manufacturer, the malfunction indicator light does not illuminate under any of the following circumstances, unless the manufacturer can demonstrate that any identified OBD problems discovered during the Administrator's evaluation will be corrected on production vehicles. Only paragraphs (f)(5) and (f)(6) of this section apply to diesel cycle vehicles and diesel cycle trucks where such vehicles and trucks are so equipped.

(1) A catalyst is replaced with a deteriorated or defective catalyst, or an electronic simulation of such, resulting in an increase of 1.5 times the NMHC standard above the NMHC emission level measured using a representative 4000 mile catalyst system.

(2) An engine misfire condition is induced resulting in exhaust emissions exceeding 1.5 times the applicable standards for NMHC, CO or NO_X.

(3) Any oxygen sensor is replaced with a deteriorated or defective oxygen sensor, or an electronic simulation of such, resulting in exhaust emissions exceeding 1.5 times the applicable standard for NMHC, CO or NO_X.

(4) A vapor leak is introduced in the evaporative and/or refueling system (excluding the tubing and connections between the purge valve and the intake manifold) greater than or equal in magnitude to a leak caused by a 0.040 inch diameter orifice, or the evaporative purge air flow is blocked or otherwise eliminated from the complete evaporative emission control system.

(5) A malfunction condition is induced in any emission-related powertrain system or component, including but not necessarily limited to, the exhaust gas recirculation (EGR) system, if equipped, the secondary air system, if equipped, and the fuel control system, singularly resulting in exhaust emissions exceeding 1.5 times the applicable emission standard for NMHC, CO or NO_X.

(6) A malfunction condition is induced in an electronic emission-related powertrain system or component not otherwise described above that either provides input to or receives commands from the on-board computer resulting in a measurable impact on emissions.

[63 FR 70697, Dec. 22, 1998]

Subpart B—Emission Regulations for 1977 and Later Model Year New Light-Duty Vehicles and New Light-Duty Trucks and New Otto-Cycle Complete Heavy-Duty Vehicles; Test Procedures

SOURCE: 42 FR 32954, June 28, 1977, unless otherwise noted.

§ 86.101 General applicability.

(a) The provisions of this subpart are applicable to 1977 and later model year new light-duty vehicles and light duty trucks, and 2001 and later model year new Otto-cycle heavy-duty vehicles and engines certified under the provisions of subpart S of this part.

(1) Sections 86.101 through 86.145–78 apply for 1978 and later model years.

(2) [Reserved]

(3) Sections 86.150 through 86.157 describe the refueling test procedures for light-duty vehicles and light duty trucks and apply for model years 1998 and later. They also describe the refueling test procedures for 2004 and later model year Otto-cycle complete heavy-duty vehicles that must meet the ORVR standards under the provisions of subpart S of this part.

(4) For fuel economy testing according to part 600 of this chapter, in the model years of 2000 and 2001 only, manufacturers have the option to use the dynamometer provisions of § 86.108–00(b)(1) and § 86.129–00 (a), (b), and (c) instead of the provisions of § 86.108–00(b)(2) and § 86.129–00 (a), (e), and (f).

(b) Provisions of this subpart apply to tests performed by both the Administrator and motor vehicle manufacturers.

(c) *National Low Emission Vehicle Program for light-duty vehicles and light light-duty trucks.* A manufacturer may elect to certify 1999 and later model year light-duty vehicles and light light-duty trucks to the provisions of the National Low Emission Vehicle Program contained in subpart R of this part. Subpart R of this part is applicable only to those manufacturers that opt into the National Low Emission Vehicle Program, under the provisions of subpart R of this part, and that have not exercised a valid opt-out from the National Low Emission Vehicle Program, which opt-out has gone into effect under the provisions of § 86.1707. All provisions of this subpart are applicable to vehicles certified pursuant to subpart R of this part, except as specifically noted in subpart R of this part.

(d) References in this subpart to engine families and emission control systems shall be deemed to apply to durability groups and test groups as applicable for manufacturers certifying new light-duty vehicles, light-duty trucks, and heavy-duty vehicles under the provisions of subpart S of this part.

(e) References in this subpart to light-duty vehicles or light-duty trucks shall be deemed to apply to light-duty vehicles, light-duty trucks, or heavy-duty vehicles and engines as applicable for manufacturers certifying new light-duty vehicles, light-duty trucks, and heavy-duty vehicles and engines under the provisions of subpart S of this part.

[42 FR 32954, June 28, 1977, as amended at 59 FR 16295, Apr. 6, 1994; 59 FR 48504, Sept. 21, 1994; 61 FR 54890, Oct. 22, 1996; 62 FR 31234, June 6, 1997; 63 FR 965, Jan. 7, 1998; 64 FR 23921, May 4, 1999; 65 FR 59956, Oct. 6, 2000]

§ 86.102 Definitions.

The definitions in subpart A apply to this subpart.

[45 FR 14508, Mar. 5, 1980]

§ 86.103 Abbreviations.

The abbreviations in subpart A apply to this subpart.

[45 FR 14508, Mar. 5, 1980]

§ 86.104 Section numbering; construction.

(a) The model year of initial applicability is indicated by the section number. The two digits following the hyphen designate the first model year for which a section is effective. A section remains effective until superseded.

Example Section 86.111–78 applies to the 1978 and subsequent model years until superseded. If a § 86.111–81 is promulgated it would take effect beginning with the 1981 model year; § 86.111–78 would apply to model years 1978 through 1980.

(b) A section reference without a model year suffix refers to the section applicable for the appropriate model year.

(c) Unless indicated otherwise, all provisions in this subpart apply to petroleum-fueled, natural gas-fueled, liquefied petroleum gas-fueled and methanol-fueled vehicles.

[42 FR 32954, June 28, 1977. Redesignated at 45 FR 14508, Mar. 5, 1980, as amended at 54 FR 14499, Apr. 11, 1989; 59 FR 48504, Sept. 21, 1994]

§ 86.105 Introduction; structure of subpart.

(a) This subpart describes the equipment required and the procedures to follow in order to perform gaseous exhaust, particulate, and evaporative emission tests on light-duty vehicles and light-duty trucks. Subpart A of this part sets forth testing requirements and test intervals necessary to comply with EPA certification procedures. Not all emission measurement techniques described in this subpart will be necessary for all vehicles. Subpart A of this part defines the conditions under which vehicles may be exempted from measuring methane and/or waived from measuring particulate matter.

(b) Three topics are addressed in this subpart. Sections 86.106 through 86.115 set forth specifications and equipment requirements; §§ 86.116 through 86.126 discuss calibration methods and frequency; test procedures and data requirements are listed in §§ 86.127 through 86.157.

[56 FR 25760, June 5, 1991, as amended at 59 FR 16295, Apr. 6, 1994; 59 FR 48504, Sept. 21, 1994]

§ 86.106–00 Equipment required; overview.

Section 86.106–00 includes text that specifies requirements that differ from § 86.106–96. Where a paragraph in § 86.106–96 is identical and applicable to § 86.106–00, this may be indicated by specifying the corresponding paragraph and the statement ''[Reserved]. For guidance see § 86.106–96.''

(a) introductory text through (a)(2) [Reserved]. For guidance see § 86.106–96.

(a)(3) Fuel, analytical gas, and driving schedule specifications. Fuel specifications for exhaust and evaporative emissions testing and for mileage accumulation for petroleum-fueled and methanol-fueled vehicles are specified in § 86.113. Analytical gases are specified in § 86.114. The EPA Urban Dynamometer Driving Schedule (UDDS), US06, and SC03 driving schedules, for use in exhaust emission tests, and the New York City Cycle (NYCC), for use with the UDDS in running loss tests, are specified in §§ 86.115, 86.130, 86.159, 86.160, and appendix I to this part.

(b) [Reserved]

[61 FR 54890, Oct. 22, 1996]

§ 86.106–90 Equipment required; overview.

(a) This subpart contains procedures for exhaust emissions tests on petroleum-fueled, and methanol-fueled light-duty vehicles and light-duty trucks, and for evaporative emission tests on gasoline-fueled and methanol-fueled light-duty vehicles and light-duty trucks. Certain items of equipment are not necessary for a particular test, *e.g.*, evaporative enclosure when testing diesel vehicles. Alternate sampling systems may be used if shown to yield equivalent results, and if approved in advance by the Administrator. Equipment required and specifications are as follows:

(1) *Evaporative emission tests, gasoline-fueled and methanol-fueled vehicles.* The evaporative emission test is closely related to and connected with the exhaust emission test. All vehicles tested for evaporative emissions must be tested for exhaust emissions. Further, unless the evaporative emission test is waived by the Administrator under § 86.090–26, all gasoline-fueled and methanol-fueled vehicles must undergo both tests. (Diesel vehicles are excluded from the evaporative emission standard.) Section 86.107 specifies the necessary equipment.

(2) *Exhaust emission tests.* All vehicles subject to this subpart are tested for exhaust emissions. The exhaust from Otto-cycle vehicles is tested for gaseous emissions only, using the CVS concept (§ 86.109). The exhaust from diesel vehicles is tested for both gaseous and particulate emissions. Petroleum-fueled diesel vehicle testing also utilizes the CVS concept of measuring emissions, but requires that a PDP-CVS or CFV with heat exchanger be used, and that it be connected to a dilution tunnel in order to sample particulate emissions (§ 86.110). The exhaust

from methanol-fueled diesel vehicles is tested for both gaseous and particulate emissions using the CVS concept (either PDP CVS or CFV as specified in § 86.109 or PDP-CVS or CFV with heat exchanger as specified in § 86.110 may be used) and is connected to a dilution tunnel to sample particulate emissions (§ 86.110) (This equipment may be used with methanol-fueled Otto-cycle vehicles, however, particulates are not measured). All gasoline-fueled and methanol-fueled vehicles are either tested for evaporative emissions or undergo a diurnal heat build. Petroleum-fueled diesel vehicles are excluded from this requirement. Equipment necessary and specifications appear in §§ 86.108 through 86.114.

(3) *Fuel, analytical gas, and driving schedule specifications.* Fuel specifications for exhaust and evaporative emissions testing and for mileage accumulation for petroleum-fueled and methanol-fueled vehicles are specified in § 86.113. Analytical gases are specified in § 86.114. The EPA Urban Dynamometer Driving Schedule (UDDS) for use in petroleum-fueled and methanol-fueled exhaust emissions tests is specified in § 86.115 and appendix I.

(b) [Reserved]

[54 FR 14499, Apr. 11, 1989]

§ 86.106–94 Equipment required; overview.

(a) This subpart contains procedures for exhaust emissions tests on petroleum-fueled, natural gas-fueled, liquefied petroleum gas-fueled and methanol-fueled light-duty vehicles and light-duty trucks, and for evaporative emission tests on gasoline-fueled, natural gas-fueled, liquefied petroleum gas-fueled and methanol-fueled light-duty vehicles and light-duty trucks. Certain items of equipment are not necessary for a particular test, *e.g.*, evaporative enclosure when testing petroleum-fueled diesel vehicles. Alternate sampling systems may be used if shown to yield equivalent results and if approved in advance by the Administrator. Equipment required and specifications are as follows:

(1) *Evaporative emission tests.* The evaporative emission test is closely related to and connected with the exhaust emission test. All vehicles tested for evaporative emissions must be tested for exhaust emissions. Further, unless the evaporative emission test is waived by the Administrator under § 86.090–26, all vehicles must undergo both tests. (Petroleum-fueled diesel vehicles are excluded from the evaporative emission standard.) Section 86.107 specifies the necessary equipment.

(2) *Exhaust emission tests.* All vehicles subject to this subpart are subject to testing for both gaseous and particulate exhaust emissions using the CVS concept (§ 86.109), except where exemptions or waivers are expressly provided in subpart A of these regulations. Vehicles subject to the ''Tier 0'' (i.e., phase-out) standards described under subpart A are exempted from testing for methane emissions (except natural gas-fueled vehicles). Otto-cycle vehicles subject to the ''Tier 0'' standards are waived from testing for particulates. For vehicles waived from the requirement for measuring particulate emissions, use of a dilution tunnel is not required (§ 86.109). The CVS must be connected to the dilution tunnel if particulate emission sampling is required (§ 86.110). Petroleum- and methanol-fueled diesel-cycle vehicle testing requires that a PDP-CVS or CFV with heat exchanger be used. (This equipment may be used with methanol-fueled Otto-cycle vehicles; however, particulates need not be measured for vehicles that are waived from the requirement). All gasoline-fueled, methanol-fueled, natural gas-fueled and liquified petroleum gas-fueled vehicles are either tested for evaporative emissions or undergo a diurnal heat build. Petroleum-fueled diesel-cycle vehicles are excluded from this requirement. Equipment necessary and specifications appear in §§ 86.108 through 86.114.

(3) *Fuel, analytical gas, and driving schedule specifications.* Fuel specifications for exhaust and evaporative emissions testing and for mileage accumulation are specified in § 86.113. Analytical gases are specified in § 86.114. The EPA Urban Dynamometer Driving Schedule (UDDS) for use in exhaust emissions tests is specified in § 86.115 and appendix I of this part.

(b) [Reserved]

[56 FR 25760, June 5, 1991, as amended at 59 FR 48504, Sept. 21, 1994]

§ 86.106–96 Equipment required; overview.

(a) This subpart contains procedures for exhaust emission tests on petroleum-fueled, natural gas-fueled, liquefied petroleum gas-fueled, and methanol-fueled light-duty vehicles and light-duty trucks, and for evaporative emission tests on gasoline-fueled, natural gas-fueled, liquefied petroleum gas-fueled, and methanol-fueled light-duty vehicles and light-duty trucks. Certain items of equipment are not necessary for a particular test, e.g., evaporative enclosure when testing petroleum-fueled diesel vehicles. Alternate equipment, procedures, and calculation methods may be used if shown to yield equivalent or superior results, and if approved in advance by the Administrator. Equipment required and specifications are as follows:

(1) *Evaporative emission tests, gasoline-fueled vehicles.* The evaporative emission test is closely related to and connected with the exhaust emission test. All vehicles tested for evaporative emissions must undergo testing according to the test sequences described in § 86.130–96; however, the Administrator may omit measurement of exhaust emissions to test for evaporative emissions. The Administrator may truncate a test after any valid emission measurement without affecting the validity of the test. Further, unless the evaporative emission test is waived by the Administrator under § 86.090–26 or § 86.1810, as applicable, all vehicles must undergo both tests. (Petroleum-fueled diesel vehicles are excluded from the evaporative emission standard.) Section 86.107 specifies the necessary equipment.

(2) *Exhaust emission tests.* All vehicles subject to this subpart are subject to testing for both gaseous and particulate exhaust emissions using the CVS concept (see § 86.109), except where exemptions or waivers are expressly provided in subpart A of this part. Vehicles subject to the ''Tier 0'' (i.e., phase-out) standards described under subpart A of this part are exempted from testing for methane emissions. Otto-cycle vehicles subject to the ''Tier 0'' standards are waived from testing for particulates. For vehicles waived from the requirement for measuring particulate emissions, use of a dilution tunnel is not required (see § 86.109). The CVS must be connected to the dilution tunnel if particulate emission sampling is required (see § 86.110). Petroleum- and methanol-fueled diesel-cycle vehicle testing requires that a PDP-CVS or CFV-CVS with heat exchanger be used. (This equipment may be used with methanol-fueled Otto-cycle vehicles; however, particulates need not be measured for vehicles that are waived from the requirement). All vehicles equipped with evaporative canisters are preconditioned by loading the canisters with hydrocarbon vapors. Petroleum-fueled diesel vehicles are excluded from this requirement.

(3) *Fuel, analytical gas, and driving schedule specifications.* Fuel specifications for exhaust and evaporative emissions testing and for mileage accumulation are specified in § 86.113. Analytical gases are specified in § 86.114. The EPA Urban Dynamometer Driving Schedule (UDDS) for use in exhaust emissions tests is specified in § 86.115 and appendix I of this part.

(b) [Reserved]

[58 FR 16026, Mar. 24, 1993, as amended at 59 FR 48504, Sept. 21, 1994; 60 FR 43888, Aug. 23, 1995; 64 FR 23921, May 4, 1999]

§ 86.107–90 Sampling and analytical system; evaporative emissions.

(a) Component description (evaporative emissions sampling system). The following components will be used in evaporative emissions sampling systems for testing under this subpart.

(1) *Evaporative emission measurement enclosure.* The enclosure shall be readily sealable, rectangular in shape, with space for personnel access to all sides of the vehicle. When sealed, the enclosure shall be gas tight in accordance with § 86.117. Interior surfaces must be impermeable and non-reactive to hydrocarbons and to methanol (if the enclosure is used for methanol-fueled vehicles). One surface should be of flexible, impermeable and non-reactive material to allow for minor volume changes, resulting from temperature changes. Wall design should promote

maximum dissipation of heat, and if artificial cooling is used, interior surface temperatures shall not be less than 68 °F (20 °C).

(2) *Evaporative emission hydrocarbon and methanol analyzers.* (i) For gasoline- and methanol-fueled vehicles a hydrocarbon analyzer utilizing the hydrogen flame ionization principle (FID) shall be used to monitor the atmosphere within the enclosure (a heated FID (HFID)(235°±15 °F (113±8 °C)) is recommended for methanol-fueled vehicles). Instrument bypass flow may be returned to the enclosure. The FID shall have a response time to 90 percent of final reading of less than 1.5 seconds, and be capable of meeting performance requirements expressed as a function of Cstd: where Cstd is the specific enclosure hydrocarbon level, in ppm, corresponding to the evaporative emission standard:

(A) Stability of the analyzer shall be better than 0.01 Cstd ppm at zero and span over a 15-minute period on all ranges used.

(B) Repeatability of the analyzer, expressed as one standard deviation, shall be better than 0.005 Cstd ppm on all ranges used.

(ii) For methanol-fueled vehicles, a methanol sampling and analyzing system is required in addition to the FID analyzer. The methanol sampling equipment shall consist of impingers for collecting the methanol sample and appropriate equipment for drawing the sample through the impingers. The analytical equipment shall consist of a gas chromatograph equipped with a flame ionization detector. (NOTE: For 1990 through 1994 model year methanol-fueled vehicles, a HFID calibrated on methanol may be used in place of the HFID, calibrated on propane plus the methanol impingers and associated analytical equipment).

(iii) The methanol sampling system shall be designed such that, if a test vehicle emitted the maximum allowable level of methanol (based on all applicable standards) during any phase of the test, the measured concentration in the primary impinger would exceed either 25 mg/l or a concentration equal to 25 times the limit of detection for the GC analyzer, and such that the primary impinger collects at least 90 percent of the analyte in the samples. The remaining analyte shall be collected by the secondary impinger. This requirement does not apply to dilution air samples, since they do not require secondary impingers, or to samples in which the concentrations approach the limit of detection. The provisions of this paragraph apply to the design of sampling systems, not to individual tests.

(3) *Evaporative emission hydrocarbon and methanol data recording system.* (i) The electrical output of the FID used for measuring hydrocarbons (or hydrocarbons plus methanol as appropriate) shall be recorded at least at the initiation and termination of each diurnal or hot soak. The recording may be by means of a strip chart potentiometric recorder, by use of an on-line computer system or other suitable means. In any case, the recording system must have operational characteristics (signal to noise ratio, speed of response, etc.) equivalent to or better than those of the signal source being recorded, and must provide a permanent record of results. The record shall show a positive indication of the initiation and completion of each diurnal or hot soak along with the time elapsed between initiation and completion of each soak.

(ii) For the methanol sample, permanent records shall be made of the following: the volumes of deionized water introduced into each impinger, the rate and time of sample collection, the volumes of each sample introduced into the gas chromatograph, the flow rate of carrier gas through the column, the column temperature, and the chromatogram of the analyzed sample.

(4) *Tank fuel heating system.* The tank fuel heating system shall consist of a heat source and a temperature controller. A typical heat source is a 2000 W heating pad. Other sources may be used as required by circumstances. The temperature controller may be manual, such as a variable voltage transformer, or may be automated. The heating system must not cause hot spots on the tank wetted surface which could cause local overheating of the fuel. Heat must not be applied to the vapor in the tank above the liquid fuel. The temperature controller must be capable of controlling the fuel tank temperature

during the diurnal soak to within ±3 °F (±1.7 °C) of the following equation:

$F = T_o + (0.4)t.$

or *For SI units:*

$C = T_o + (2/9)t.$

Where:

F = Temperature in °F.
C = Temperature in °C.
t = Time since start of test in minutes.
T_o = initial temperature in °F (or in °C for SI units).

(5) *Temperature recording system.* Strip chart recorder(s) or automatic data processor shall be used to record enclosure ambient and vehicle fuel tank temperature during the evaporative emissions test. The temperature recorder or data processor shall record each temperature at least once every minute. The recording system shall be capable of resolving time to ±15s and capable of resolving temperature to ±0.75 °F (±0.42 °C). The temperature recording system (recorder and sensor) shall have an accuracy of ±3 °F (±1.7 °C). The recorder (data processor) shall have a time accuracy of ±15s and a precision of ±15s. Two ambient temperature sensors, connected to provide one average output, shall be located in the enclosure. These sensors shall be located at the approximate vertical centerline of each side wall extending 4 inches (nominally) into the enclosure at a height of 3±0.5 ft (0.9±0.2m). The vehicle fuel tank temperature sensor shall be located in the fuel tank so as to measure the temperature of the prescribed test fuel at the approximate mid-volume of the fuel. Manufacturers shall arrange that vehicles furnished for testing at Federal certification facilities be equipped with iron-constantan Type J thermocouples for measurement of fuel tank temperature.

(6) *Purge blower.* One or more portable or fixed blowers shall be used to purge the enclosure. The blowers shall have sufficient flow capacity to reduce the enclosure hydrocarbon and/or methanol concentration from the test level to the ambient level between tests. Actual flow capacity will depend upon the time available between tests.

(7) *Mixing blower.* One or more small blowers or fans with a total capacity of 200 to 1000 cfm shall be used to mix the contents of the enclosure during evaporative emission testing. No portion of the air stream shall be directed toward the vehicle. Maintenance of uniform concentrations throughout the enclosure is important to the accuracy of the test.

(b) [Reserved]

[54 FR 14499, Apr. 11, 1989, as amended at 60 FR 34335, June 30, 1995]

§ 86.107–96 Sampling and analytical systems; evaporative emissions.

(a) *Testing enclosures*—(1) *Diurnal emission test.* The enclosure shall be readily sealable, rectangular in shape, with space for personnel access to all sides of the vehicle. When sealed, the enclosure shall be gas tight in accordance with § 86.117–96. Interior surfaces must be impermeable and nonreactive to hydrocarbons (and to methanol, if the enclosure is used for methanol-fueled vehicles). The temperature conditioning system shall be capable of controlling the internal enclosure air temperature to follow the prescribed temperature versus time cycle as specified in § 86.133–96 and appendix II of this part, within an instantaneous tolerance of ±3.0 °F of the nominal temperature versus time profile throughout the test, and an average tolerance of 2.0 °F over the duration of the test (where the average is calculated using the absolute value of each measured deviation). The control system shall be tuned to provide a smooth temperature pattern that has a minimum of overshoot, hunting, and instability about the desired long-term ambient temperature profile. Interior surface temperatures shall not be less than 40 °F at any time during the diurnal emission test. To accommodate the volume changes due to enclosure temperature changes, either a variable-volume or fixed-volume enclosure may be used for diurnal emission testing:

(i) *Variable-volume enclosure.* The variable-volume enclosure expands and contracts in response to the temperature change of the air mass in the enclosure. Two potential means of accommodating the internal volume changes are movable panel(s), or a bellows design, in which impermeable bag(s) inside the enclosure expand and

contract in response to internal pressure changes by exchanging air from outside the enclosure. Any design for volume accommodation must maintain the integrity of the enclosure as specified in § 86.117–96 over the specified temperature range. Any method of volume accommodation shall limit the differential between the enclosure internal pressure and the barometric pressure to a maximum value of ±2.0 inches of water. The enclosure shall be capable of latching to a fixed volume. A variable-volume enclosure must be capable of accommodating a ±7 percent change from its ''nominal volume'' (see § 86.117–96(b)), accounting for temperature and barometric pressure variation during testing.

(ii) *Fixed-volume enclosure.* The fixed-volume enclosure shall be constructed with rigid panels that maintain a fixed enclosure volume, and meet the following requirements.

(A) The enclosure shall be equipped with a mechanism to maintain a fixed internal air volume. This may be accomplished either by withdrawing air at a constant rate and providing makeup air as needed, or by reversing the flow of air into and out of the enclosure in response to rising or falling temperatures. If inlet air is added continuously throughout the test, it should be filtered with activated carbon to provide a relatively low and constant hydrocarbon level. Any method of volume accommodation shall maintain the differential between the enclosure internal pressure and the barometric pressure to a maximum value of ±2.0 inches of water.

(B) The equipment shall be capable of measuring the mass of hydrocarbon and methanol (if the enclosure is used for methanol-fueled vehicles) in the inlet and outlet flow streams with a resolution of 0.01 gram per hour. A bag sampling system may be used to collect a proportional sample of the air withdrawn from and admitted to the enclosure. Alternatively, the inlet and outlet flow streams may be continuously analyzed using an on-line FID analyzer and integrated with the flow measurements to provide a continuous record of the mass hydrocarbon and methanol removal.

(2) *Running loss test.* The enclosure shall be readily sealable, rectangular in shape, with space for personnel access to all sides of the vehicle. When sealed, the enclosure shall be gas tight in accordance with § 86.117–96. The enclosure may be equipped with a personnel door, provided that the enclosure can still meet the requirements of § 86.117–96 with the door installed. Interior surfaces must be impermeable and nonreactive to hydrocarbons and to methanol (if the enclosure is used for methanol-fueled vehicles). Interior surface temperatures shall not be less than 40 °F. If a running loss enclosure meets all the requirements of paragraph (a)(1) of this section, it may be used as a diurnal evaporative emission enclosure. The enclosure must contain a dynamometer that meets the requirements of § 86.108. Provisions shall be made to remove exhaust gases from the enclosure. During the running loss test, ambient temperatures must be maintained at 95±5 °F (95±2 °F on average). An air or oxygen cylinder with an attached self-contained breathing apparatus may be provided for the vehicle operator. The air required for vehicle operation shall be provided by one of the following methods:

(i) The running loss enclosure may be equipped to supply air to the vehicle, at a temperature of 95±5 °F, from sources outside of the running loss enclosure directly into the operating engine's air intake system. Supplemental air requirements (e.g., for an air pump) shall be supplied by drawing air from the engine intake source.

(ii) If it is shown to yield equivalent or superior results, the running loss enclosure may be designed with an air makeup system that brings outside air into the enclosure to accommodate the aspiration needs of the engine and any auxiliary devices. The makeup air shall be monitored to establish the background hydrocarbon levels (or hydrocarbon and methanol, levels, if applicable) of the makeup air. A filter may be used to provide dry air with a stable concentration of background hydrocarbon. The makeup-air vent shall be readily sealable for calibration of the enclosure and other purposes. For calculation of running loss emissions, it may be assumed that the hydrocarbon

and methanol concentration in the air consumed by the vehicle is the same as that of the rest of the air in the enclosure.

(3) *Hot soak test.* The hot soak test may be conducted by holding the vehicle in an enclosure that meets the requirements for either diurnal emission or running loss tests. The enclosure shall be configured to provide an internal enclosure ambient temperature of 95±10 °F for the first 5 minutes, and 95±5 °F (95±2 °F on average) for the remainder of the hot soak test.

(i) If the hot soak test is conducted in the same enclosure as the immediately preceding running loss test, interior surface temperatures shall not be below 70 °F for the last 55 minutes of the hot soak test.

(ii) If the hot soak test is not conducted in the same enclosure as the immediately preceding running loss test, interior surface temperatures shall not be below 70 °F for the duration of the hot soak test.

(b) *Evaporative emission hydrocarbon and methanol analyzers.* (1) For gasoline fueled, natural gas-fueled, liquefied petroleum gas-fueled and methanol-fueled vehicles a hydrocarbon analyzer utilizing the hydrogen flame ionization principle (FID) shall be used to monitor the atmosphere within the enclosure (a heated FID (HFID)(235°±15 °F (113±8 °C)) is recommended for methanol-fueled vehicles). For natural gas-fueled vehicles, the FID may be calibrated using methane, or if calibrated using propane the FID response to methane shall be determined and applied to the FID hydrocarbon reading. Provided evaporative emission results are not effected, a probe may be used to detect or verify hydrocarbon sources during a running loss test. Instrument bypass flow may be returned to the enclosure. The FID shall have a response time to 90 percent of final reading of less than 1.5 seconds.

(2) For methanol-fueled vehicles, a methanol sampling and analyzing system is required in addition to the FID analyzer. The methanol sampling equipment shall consist of impingers for collecting the methanol sample and appropriate equipment for drawing the sample through the impingers. The analytical equipment shall consist of a gas chromatograph equipped with a flame ionization detector.

(3) The methanol sampling system shall be designed such that, if a test vehicle emitted the maximum allowable level of methanol (based on all applicable standards) during any phase of the test, the measured concentration in the primary impinger would exceed either 25 mg/l or a concentration equal to 25 times the limit of detection for the GC analyzer, and such that the primary impinger collects at least 90 percent of the analyte in the samples. The remaining analyte shall be collected by the secondary impinger. This requirement does not apply to dilution air samples, since they do not require secondary impingers, or to samples in which the concentrations approach the limit of detection. The provisions of this paragraph apply to the design of sampling systems, not to individual tests.

(c) *Evaporative emission hydrocarbon and methanol data recording system.* (1) The electrical output of the FID used for measuring hydrocarbons (or hydrocarbons plus methanol, as appropriate) shall be recorded at least at the initiation and termination of each running loss and hot soak test, and at least at the initiation and termination of the enclosure sampling period(s) for the diurnal emission test, as described in § 86.133. The recording may be taken by means of a strip chart potentiometric recorder, by use of an on-line computer system or other suitable means. In any case, the recording system must have operational characteristics (signal-to-noise ratio, speed of response, etc.) equivalent to or better than those of the signal source being recorded, and must provide a permanent record of results. The record shall show a positive indication of the initiation and completion of each hot soak, running loss, or diurnal emission test (including initiation and completion of sampling period(s)), along with the time elapsed during each soak.

(2) For the methanol sample, permanent records shall be made of the following: the volumes of deionized water introduced into each impinger, the rate and time of sample collection, the volumes of each sample introduced into the gas chromatograph, the flow rate

of carrier gas through the column, the column temperature, and the chromatogram of the analyzed sample.

(d) *Fuel temperature control system.* Fuel temperatures of the test vehicle shall be controlled, as specified in § 86.134(g)(1)(xv), with the following combination of fans. The control system shall be tuned and operated to provide a smooth and continuous fuel temperature profile that is representative of the on-road temperature profile. The running loss test configuration should be designed to avoid heating or cooling the fuel tank's vapor space in a way that would cause vapor temperature behavior to be unrepresentative of the vehicle's on-road profile.

(1) A vehicle cooling fan shall discharge air to the front of the vehicle. The fan shall be a road-speed modulated fan that is controlled to a discharge velocity that follows the dynamometer roll speed, at least up to speeds of 30 mph, throughout the driving cycle. If a warning light or gauge indicates that the vehicle's engine coolant has overheated, subsequent test runs on the vehicle must include a vehicle cooling fan that follows the dynamometer roll speed at all speeds throughout the test cycle. The fan may direct airflow to both the vehicle radiator air inlet(s) and the vehicle underbody.

(2) An additional fan may be used to discharge airflow from the front of the vehicle directly to the vehicle underbody to control fuel temperatures. Such a fan shall provide a total discharge airflow not to exceed 8,000 cfm.

(3) Additional fans may be used to route heating or cooling air directly at the bottom of the vehicle's fuel tank. The air supplied to the tank shall be between 85° and 160 °F, with a total discharge airflow not to exceed 4,000 cfm. For exceptional circumstances, manufacturers may direct up to 6,000 cfm at the bottom of the fuel tank with the advance approval of the Administrator.

(4) Direct fuel heating may be needed for canister preconditioning, as specified in § 86.132(j)(2). Also, under exceptional circumstances in which airflow alone is insufficient to control fuel temperatures during the running loss test, direct fuel tank heating may be used (see § 86.134–96(g)(1)(xv)). The heating system must not cause hot spots on the tank wetted surface that could cause local overheating of the fuel. Heat must not be applied directly to the tank's vapor space, nor to the liquid-vapor interface.

(e) *Temperature recording system.* A strip chart potentiometric recorder, an on-line computer system, or other suitable means shall be used to record enclosure ambient temperature during all evaporative emission test segments, as well as vehicle fuel tank temperature during the running loss test. The recording system shall record each temperature at least once every minute. The recording system shall be capable of resolving time to ±15 s and capable of resolving temperature to ±0.75 °F (±0.42 °C). The temperature recording system (recorder and sensor) shall have an accuracy of ±3 °F (±1.7 °C). The recorder (data processor) shall have a time accuracy of ±15 s and a precision of ±15 s. Enclosures shall be equipped with two ambient temperature sensors, connected to provide one average output, located 3 feet above the floor at the approximate mid-length of each side wall of the enclosure and within 3 to 12 inches of each side wall. For diurnal emission testing, an additional temperature sensor shall be located underneath the vehicle to provide a temperature measurement representative of the air temperature under the fuel tank. For running loss testing, an ambient temperature sensor shall be located at the inlet to the fan that provides engine cooling. Manufacturers shall arrange that vehicles furnished for testing at federal certification facilities be equipped with temperature sensors for measurement of fuel tank temperatures. Vehicles shall be equipped with two temperature sensors installed to provide an average liquid fuel temperature. The temperature sensors shall be placed to measure the temperature at the mid-volume of the liquid fuel at a fill level of 40 percent of nominal tank capacity. An additional temperature sensor may be placed to measure vapor temperatures approximately at the mid-volume of the vapor space, though measurement of vapor temperatures is optional during the running loss test. In-tank temperature

sensors are not required for the supplemental two-diurnal test sequence specified in § 86.130–96.

(f) *Pressure recording system.* A strip chart potentiometric recorder, an on-line computer system, or other suitable means, shall be used to record the enclosure gage pressure for any testing in an enclosure, as well as the vehicle's fuel tank pressure during the running loss test and the outdoor driving procedure specified in § 86.129–94(d). Fuel tank pressure measurement and recording equipment are optional during the running loss test. The recording system shall record each pressure at least once every minute. The recording system shall be capable of resolving time to ±15 s and capable of resolving pressure to ±0.1 inches of water. The pressure recording system (recorder and sensor) shall have an accuracy of ±1.0 inch of water. The recorder (data processor) shall have a time accuracy of ±15 s and a precision of ±15 s. The pressure transducer shall be installed to measure the pressure in the vapor space of the fuel tank.

(g) *Purge blower.* One or more portable or fixed blowers shall be used to purge the enclosure. The blowers shall have sufficient flow capacity to reduce the enclosure hydrocarbon and/or methanol concentration from the test level to the ambient level between tests. Actual flow capacity will depend upon the time available between tests.

(h) *Mixing blower.* Blowers or fans shall be used to mix the enclosure contents during evaporative emission testing. The inlets and outlets of the air circulation blower(s) shall be configured to provide a well dispersed air circulation pattern that produces effective internal mixing and avoids significant temperature or hydrocarbon stratification. Maintenance of uniform concentrations throughout the enclosure is important to the accuracy of testing.

(1) *Diurnal emission test.* Blowers or fans shall have a capacity of 0.8±0.2 cfm per cubic foot of the nominal enclosure volume for mixing in the enclosure. Additional fans may be used to maintain a minimum wind speed of 5 mph (8 km/h) under the fuel tank of the test vehicle.

(2) *Running loss test.* Blowers or fans shall have a total capacity of at least 1.0 cfm per cubic foot of the nominal enclosure volume.

(3) *Hot soak test.* Blowers or fans must have a capacity of 0.8±0.2 cfm per cubic foot of the nominal enclosure volume. Circulated air shall not be aimed directly at the vehicle.

(i) *Point-source running loss measurement facility.* Some system requirements pertain specifically to running loss testing by the point-source method, in which emissions from potential sources are collected and routed to a sampling system. Emissions are sampled with the same equipment and techniques as for exhaust emission measurement. The test environment must contain a dynamometer that meets the requirements of § 86.108. During the running loss test, ambient temperatures must be maintained at 95±5 °F (95±2 °F on average). An air or oxygen cylinder with an attached self-contained breathing apparatus may be provided for the vehicle operator.

(1) The running loss vapor vent collection system shall be configured to collect all running loss emissions from each of the discrete point sources that function as vehicle fuel system vapor vents, and transport the collected vapor emissions to a CFV- or PDP-based dilution and measurement system. The collection system shall consist of a collector at each vehicle vapor vent, lengths of heated sample line connecting each collector to the inlet of the heated sample pump, and lengths of heated sample line connecting the outlet of the heated sample pump to the inlet of the running loss fuel vapor sampling system. Up to 3 feet of unheated line connecting each of the vapor collectors to the heated sample lines shall be allowed. Each heated sample pump and its associated sample lines shall be maintained at a temperature between 175 °F and 200 °F to prevent condensation of fuel vapor in the sample lines. The heated sample pump(s) and its associated flow controls shall be configured and operated to draw a flow of ambient air into each collector at a flow rate of at least 0.67 cfm. The flow controls on each heated sampling system shall include an indicating flow meter that provides an

alarm output to the data recording system if the flow rate drops below 0.67 cfm by more than 5 percent. The collector inlet for each discrete vapor vent shall be placed in proximity to the vent as necessary to capture any fuel vapor emissions without significantly affecting flow or pressure of the normal action of the vent. The collector inlets shall be designed to interface with the configuration and orientation of each specific vapor vent. For vapor vents that terminate in a tube or hose barb, a short length of tubing of an inside diameter larger throughout its length than the inside diameter of the vent outlet may be used to extend the vent into the mouth of the collector. For those vapor vent designs that are not compatible with such collector configurations, the vehicle manufacturer shall supply a collector that is configured to interface with the vapor vent design and that terminates in a fitting that is capable of capturing all vapor emitted from the vent. The Administrator may test for running losses by the point-source method without heating sample lines or pumps.

(2) The running loss fuel vapor sampling system shall be a CFV- or PDP-based dilution and measurement system that further dilutes the running loss fuel vapors collected by the vapor vent collection system(s) with ambient air, collects continuously proportional samples of the diluted running loss vapors and dilution air in sample bags, and measures the total dilute flow through the sampling system over each test interval. In practice, the system shall be configured and operated in a manner that is directly analogous to an exhaust emissions constant volume sampling system, except that the input flow to the system is the flow from the running loss vapor vent collection system(s) instead of vehicle exhaust flow. The system shall be configured and operated to meet the following requirements:

(i) The running loss fuel vapor sampling system shall be designed to measure the true mass of fuel vapor emissions collected by the running loss vapor vent collection system from the specified fuel vapor vents. The total volume of the mixture of running loss emissions and dilution air shall be measured and a continuously proportioned sample of volume shall be collected for analysis. Mass emissions shall be determined from the sample concentration and total flow over the test period.

(ii) The PDP-CVS shall consist of a dilution air filter and mixing assembly, heat exchanger, positive-displacement pump, sampling system, and associated valves, pressure and temperature sensors. The PDP-CVS shall conform to the following requirements:

(A) The gas mixture temperature, measured at a point immediately ahead of the positive-displacement pump, shall be within ±10 °F of the designed operating temperature at the start of the test. The gas mixture temperature variation from its value at the start of the test shall be limited to ±10 °F during the entire test. The temperature measuring system shall have an accuracy and precision of ±2 °F.

(B) The pressure gauges shall have an accuracy and precision of ±1.6 inches of water (±0.4 kPa).

(C) The flow capacity of the CVS shall not exceed 350 cfm.

(D) Sample collection bags for dilution air and running loss fuel vapor samples shall be sufficient size so as not to impede sample flow.

(iii) The CFV sample system shall consist of a dilution air filter and mixing assembly, a sampling venturi, a critical flow venturi, a sampling system and assorted valves, and pressure and temperature sensors. The CFV sample system shall conform to the following requirements:

(A) The temperature measuring system shall have an accuracy and precision of ±2 °F and a response time of 0.100 seconds of 62.5 percent of a temperature change (as measured in hot silicone oil).

(B) The pressure measuring system shall have an accuracy and precision of ±1.6 inches of water (0.4 kPa).

(C) The flow capacity of the CVS shall not exceed 350 cfm.

(D) Sample collection bags for dilution air and running loss fuel vapor samples shall be of sufficient size so as not to impede sample flow.

(3) An on-line computer system or strip-chart recorder shall be used to

record the following additional parameters during the running loss test sequence:

(i) CFV (if used) inlet temperature and pressure.

(ii) PDP (if used) inlet temperature, pressure, and differential pressure.

[58 FR 16027, Mar. 24, 1993, as amended at 59 FR 48505, Sept. 21, 1994; 60 FR 34335, June 30, 1995; 60 FR 43888, Aug. 23, 1995]

§ 86.107–98 Sampling and analytical system.

Section 86.107–98 includes text that specifies requirements that differ from § 86.107–96. Where a paragraph in § 86.107–96 is identical and applicable to § 86.107–98, this may be indicated by specifying the corresponding paragraph and the statement ''[Reserved]. For guidance see § 86.107–96.'' Where a corresponding paragraph of § 86.107–96 is not applicable, this is indicated by the statement ''[Reserved].''

(a)(1)–(a)(3) [Reserved]. For guidance see § 86.107–96.

(a)(4) *Refueling emissions test*. The requirements detailed in § 86.107–90 (a)(1) shall apply. Alternatively, an enclosure meeting the specifications detailed in § 86.107–96 (a)(1), (2), or (3) may be used if approved in advance by the Administrator. In addition, the enclosure shall have one or more access ports leading to flexible, automatic sealing boots, in the wall(s) of the enclosure. The function of the access port(s) and boots shall be to allow fueling of the test vehicle from a fuel nozzle and hose located outside of the enclosure, with only the spout of the nozzle passing through the automatic sealing opening of the boot during fueling. There shall be no loss in the gas tightness of the enclosure at the opening of the boot either when the nozzle is inserted or when the nozzle is not inserted.

(b)–(d) [Reserved]. For guidance see § 86.107–96.

(e) *Temperature recording system*—(1) *For all emission testing*. A strip chart potentiometric recorder, an on-line computer system, or other suitable means shall be used to record enclosure ambient temperature during all evaporative emission test segments, as well as vehicle fuel tank temperature during the running loss test. The recording system shall record each temperature at least once every minute. The recording system shall be capable of resolving time to ±15 s and capable of resolving temperature to ±0.75 °F (±0.42 °C). The temperature recording system (recorder and sensor) shall have an accuracy of ±3 °F (±1.7 °C). The recorder (data processor) shall have a time accuracy of ±15 s and a precision of ±15 s. Enclosures shall be equipped with two ambient temperature sensors, connected to provide one average output, located 3 feet above the floor at the approximate mid-length of each side wall of the enclosure and within 3 to 12 inches of each side wall. For diurnal emission testing, an additional temperature sensor shall be located underneath the vehicle to provide a temperature measurement representative of the temperature of the air under the fuel tank. For running loss testing, an ambient temperature sensor shall be located at the inlet to the fan that provides engine cooling. Manufacturers shall arrange that vehicles furnished for testing at federal certification facilities be equipped with temperature sensors for measurement of fuel tank temperature. Vehicles shall be equipped with 2 temperature sensors installed to provide an average liquid fuel temperature. The temperature sensors shall be placed to measure the temperature at the mid-volume of the liquid fuel at a fill level of 40 percent of nominal tank capacity. An additional temperature sensor may be placed to measure vapor temperatures approximately at the mid-volume of the vapor space, though measurement of vapor temperatures is optional during the running loss test. In-tank temperature sensors are not required for the supplemental two-diurnal test sequence specified in § 86.130–96 or for the refueling test specified in § 86.151–98.

(2) *Refueling emission testing only*. In addition to the enclosure ambient temperature recording system described in paragraph (e)(1) of this section, strip chart recorder(s) or automatic data processor shall be used to record vehicle soak area ambient temperature and dispensed fuel temperature at the nozzle during the test. The temperature recorder(s) or data processor shall record each temperature at least once

every 20 seconds (the soak area ambient temperature recorder may be a continuous recording system). The recording system shall be capable of resolving time to ±15s and be capable of resolving temperature to ±0.75 °F (0.42 °C).

(f)–(h)(3) [Reserved]. For guidance see § 86.107–96.

(h)(4) *Refueling emission test.* Blowers or fans must have a capacity of 0.8±0.2 cfm per cubic foot of the nominal enclosure volume. Circulated air shall not be aimed directly at the vehicle.

(5) *Spilled fuel mixing blower; refueling emission test.* An explosion-proof blower of 100–200 ft^3/min (2.8–5.7 m^3/min) capacity is required to enhance mixing of vapors from spilled fuel through the enclosure atmosphere during tests. The discharge from this blower shall be directed toward the region of the enclosure floor where fuel spillage during fueling may occur.

(i) [Reserved]. For guidance see § 86.107–96.

(j) *Refueling equipment.* The refueling equipment shall consist of a fuel delivery system with temperature control equipment, fuel flow safety switch, dispensing pump, hose, nozzle and a meter to measure the dispensed fuel volume. The dispensing nozzle shall be a commercial model, not equipped with vapor recovery hardware. A fuel recirculation system may be utilized to avoid trapping of unheated fuel in the hose. The fuel delivery system must be capable of delivering fuel at 67±1.5 °F (19.4±0.8 °C) and a constant flow rate between 4.2 and 9.8 gal/min (15.9 and 37.1 liter/min) with a tolerance of ±0.3 gal/min (±1.1 liter/min) during the refueling emissions measurement phase of the test. The accuracy of the meter for measuring the dispensed fuel volume shall be ±2 percent at the test flow rate.

[59 FR 16295, Apr. 6, 1994, as amended at 60 FR 43890, Aug. 23, 1995]

§ 86.108–00 Dynamometer.

(a) The dynamometer shall simulate the road load force and inertia specified for the vehicle being tested, and shall determine the distance traveled during each phase of the test procedure.

(b) Two types of dynamometer roll configurations are currently approved by the Administrator:

(1) A small twin-roll dynamometer that has a nominal roll diameter of 8.65 inches and a nominal roll spacing of 17 inches; and

(2)(i) An electric dynamometer that has a single roll with a nominal diameter of 48 inches (1.20 to 1.25 meters).

(ii)(A) The dynamometer must be capable of dynamically controlling inertia load during the US06 test cycle as a function of a vehicle throttle position signal if a manufacturer desires using the following test option. Any time the duration of throttle operation greater than or equal to 85% of wide open throttle (WOT) is greater than or equal to eight seconds, the test inertia load may be adjusted during any of five EPA specified acceleration events by an amount of load that will eliminate additional throttle operation greater than or equal to 85% of WOT.

(B)(*1*) The specific US06 schedule accelerations time periods where inertia load adjustments may be applied are:

(*i*) 49 through 69 seconds;

(*ii*) 83 through 97 seconds;

(*iii*) 135 through 165 seconds;

(*iv*) 315 through 335 seconds; and

(*v*) 568 through 583 seconds.

(*2*) During these five time intervals when inertia load adjustment is occurring, inertia load adjustment is discontinued when throttle operation is less than 85% of WOT or at the end of the specified time interval.

(C) Each type of generic application for implementing this concept must receive the Administrator's approval before a manufacturer may use these inertia adjustments for official US06 schedule certification tests.

(c) Other dynamometer configurations may be used for testing if it can be demonstrated that the simulated road load power and inertia are equivalent, and if approved in advance by the Administrator.

(d) An electric dynamometer meeting the requirements of paragraph (b)(2) of this section, or a dynamometer approved as equivalent under paragraph (c) of this section, must be used for all types of emission testing in the following situations.

(1)(i) Gasoline vehicles which are part of an engine family which is designated to meet the phase-in of SFTP compliance required under the implementation schedule of table A00–1 of § 86.000–08, or table A00–3, or table A00–5 of § 86.000–09.

(ii) Diesel LDVs and LDT1s which are part of an engine family which is designated to meet the phase-in of SFTP compliance required under the implementation schedule of table A00–1 of § 86.000–08, or table A00–3, or table A00–5 of § 86.000–09.

(2) Starting with the 2002 model year, any light-duty vehicle or light light-duty truck which uses any regulated fuel.

(3) Starting with the 2004 model year, any heavy light-duty truck which uses any regulated fuel.

[61 FR 54890, Oct. 22, 1996]

§ 86.108–79 Dynamometer.

(a) The dynamometer shall have a power absorption unit for simulation of road load power and flywheels or other means of simulating the inertia weight as specified in § 86.129.

(b)(1) The dynamometer shall have a roll or shaft revolution counter for determination of distance driven.

(2) In lieu of the requirement in (b)(1) of this section the manufacturer shall provide some means, approved in advance by the Administrator, for the determination of distance driven.

(c) Small twin-roll dynamometers shall have a nominal roll diameter of 8.65 inches and a nominal roll spacing of 17 inches. Large single-roll dynamometers shall have a nominal roll diameter of 48 inches. Dynamometers with other roll specifications may be used if the total simulated road load power can be shown to be equivalent, and if approved in advance by the Administrator.

[42 FR 45651, Sept. 12, 1977]

§ 86.109–90 Exhaust gas sampling system; Otto-cycle vehicles.

(a)(1) *General*. The exhaust gas sampling system described in this paragraph is designed to measure the true mass of gaseous emissions in the exhaust of either Otto-cycle light-duty vehicles and light-duty trucks. In the CVS concept of measuring mass emissions, two conditions must be satisfied: the total volume of the mixture of exhaust and dilution air must be measured, and a continuously proportioned volume of sample must be collected for analysis. Mass emissions are determined from the sample concentration and total flow over the test period.

(2) *Vehicle tailpipe to CVS Duct*. For methanol-fueled vehicles, cooling of the exhaust gases in the duct connecting the vehicle tailpipe to the CVS shall be minimized. This may be accomplished by:

(i) Using a duct of unrestricted length maintained at 235°±15 °F (113°±8 °C), heating and possible cooling capabilities are required; or

(ii) Using a short duct (up to 12 feet long) constructed of smooth wall pipe with a minimum of flexible sections, maintained at 235°±15 °F (113°±8 °C) prior to the test and during the 10 minute hot soak segment and uninsulated during the test (insulation may remain in place and/or heating may occur during testing provided maximum temperature is not exceeded); or

(iii) Using smooth wall duct less than five feet long with no required heating.

(iv) Omitting the duct and performing the exhaust gas dilution function at the vehicle tailpipe exit.

(3) *Positive displacement pump*. The Positive Displacement Pump-Constant Volume Sampler (PDP-CVS), Figure B90–1 satisfies the first condition by metering at a constant temperature and pressure through the pump. The total volume is measured by counting the revolutions made by the calibrated positive displacement pump. The proportional samples for the bag sample, and for methanol-fueled vehicles, the methanol sample (Figure B90–2) and the formaldehyde sample (Figure B90–3), are achieved by sampling at a constant flow rate. For methanol-fueled vehicles, the sample lines for the methanol and formaldehyde samples are heated to 235°±15 °F (113°±8 °C).

NOTE: For 1990 through 1994 model year methanol-fueled vehicles, methanol and formaldehyde sampling may be omitted provided the bag sample (hydrocarbons and methanol) is analyzed using a HFID calibrated with methanol.

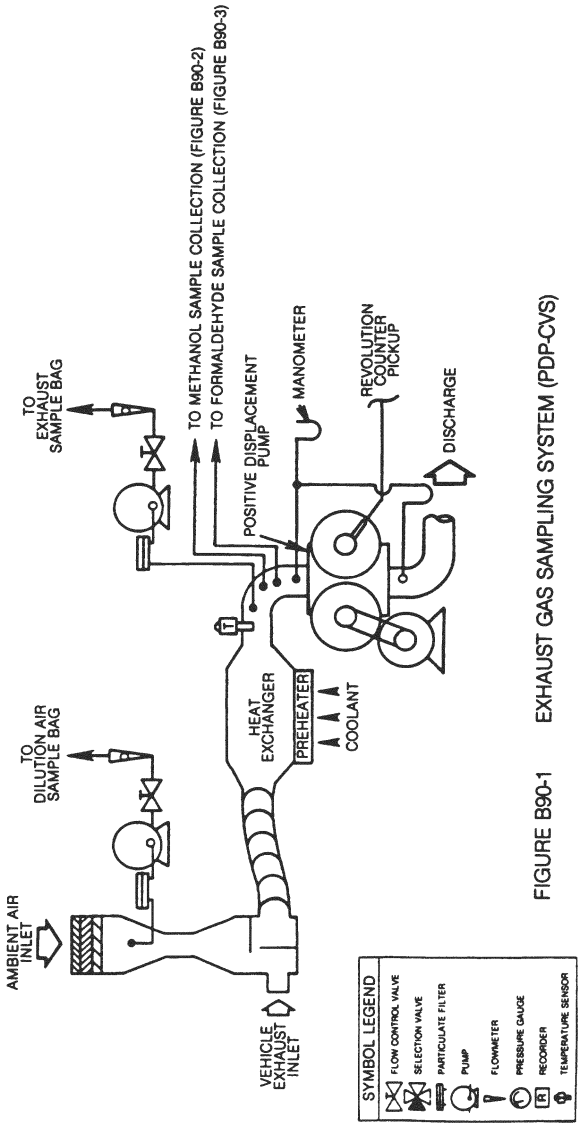

FIGURE B90-1 EXHAUST GAS SAMPLING SYSTEM (PDP-CVS)

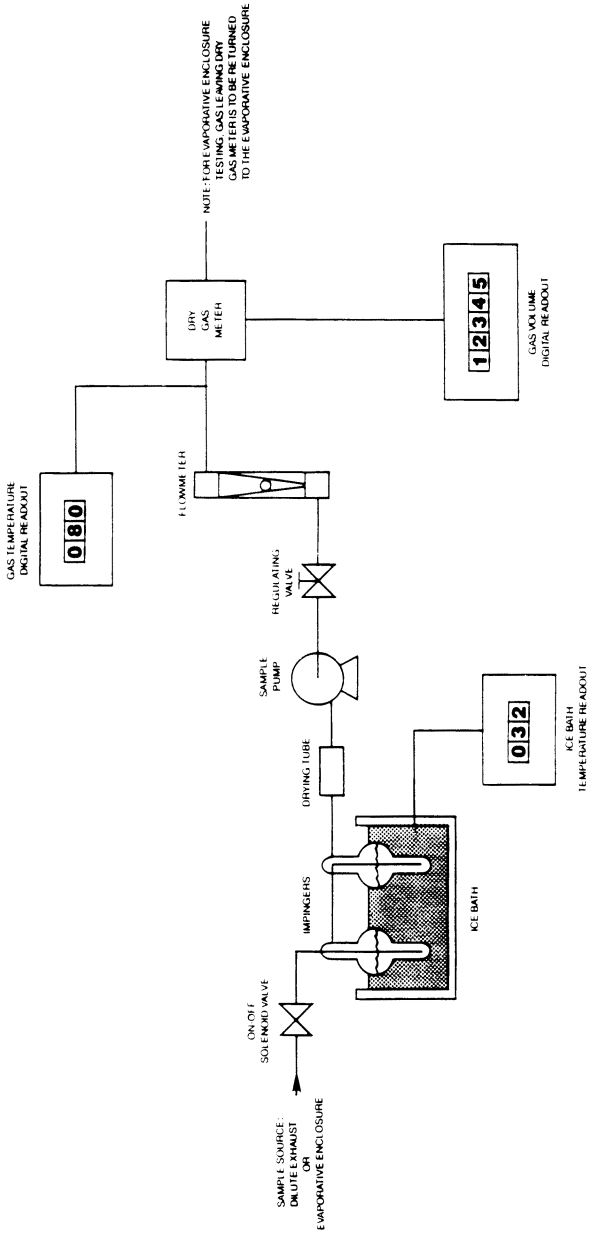

FIGURE B14-2 METHANOL SAMPLE COLLECTION FLOW SCHEMATIC

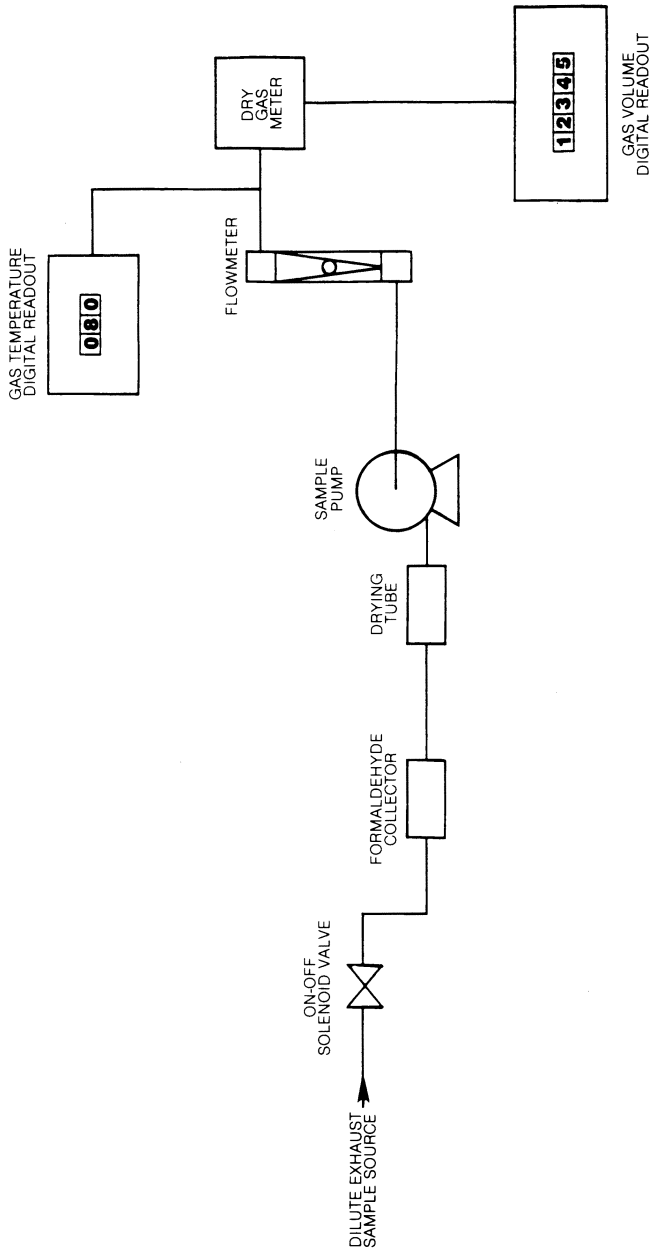

FIGURE B90-3 FORMALDEHYDE SAMPLE COLLECTION FLOW SCHEMATIC

(4) *Critical flow venturi.* The operation of the Critical Flow Venturi—Constant Volume Sampler (CFV-CVS) sample system, Figure B90–4, is based upon the principles of fluid dynamics associated with critical flow. Proportional sampling throughout temperature excursions is maintained by use of small

CFVs in the sample lines (for methanol-fueled vehicles, one line supplies sample for the bag sample, another line supplies sample for the methanol sample, and a third line supplies sample for the formaldehyde sample.) The methanol and formaldehyde sample lines are heated to 235°±15 °F (113°±8 °C) with care being taken to ensure that the CFVs of the sample probes are not heated since heating of the CFVs would cause loss of proportionality. The variable mixture flow rate is maintained at sonic velocity, is inversely proportional to the square root of the gas temperature, and is computed continuously. Since the pressure and temperature are the same at all venturi inlets, the sample volume is proportional to the total volume.

NOTE: For 1990 through 1994 model year methanol-fueled vehicles, methanol and formaldehyde sampling may be omitted provided the bag sample (hydrocarbons and methanol) is analyzed using a HFID calibrated with methanol.

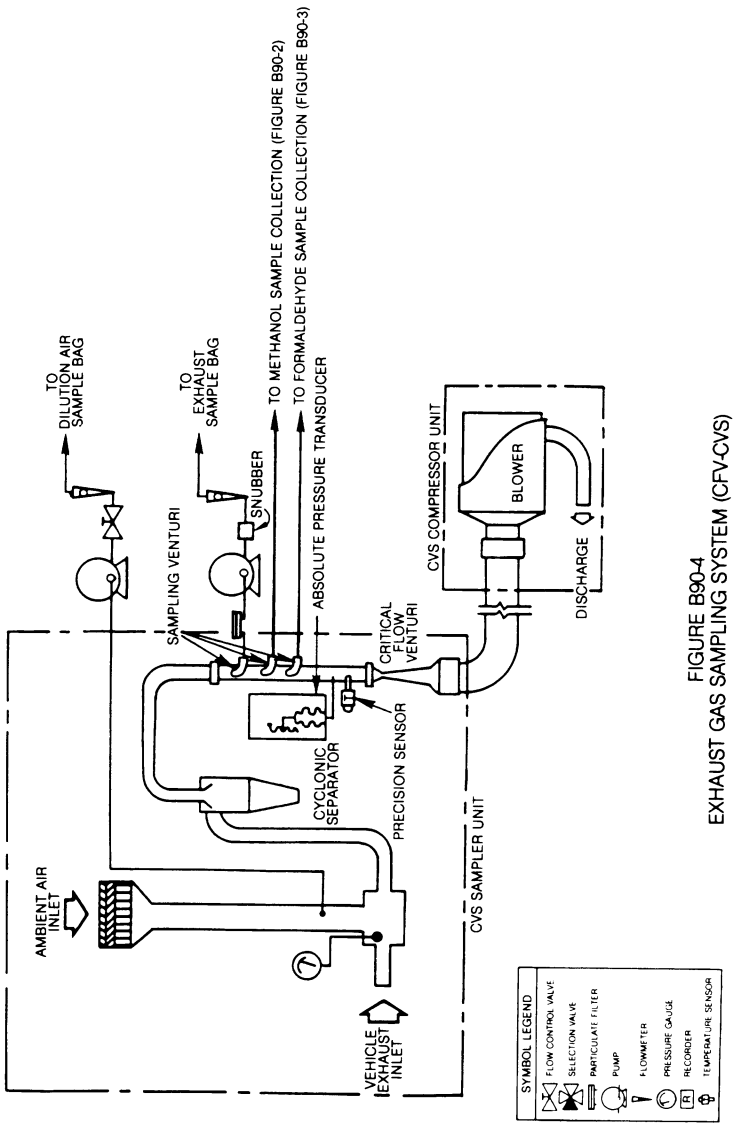

FIGURE B90-4
EXHAUST GAS SAMPLING SYSTEM (CFV-CVS)

(5) *Other systems*. Other sampling systems may be used if shown to yield equivalent results, and if approved in advance by the Administrator.

(b) *Component description, PDP-CVS*. The PDP-CVS, Figure B90–1, consists of a dilution air filter and mixing assembly, heat exchanger, positive displacement pump, sampling systems (see Figure B90–2 for methanol sampling system and Figure B90–3 for formaldehyde sampling system) sampling lines which are heated to 235°±15 °F (113°±8 °C) in the case of the methanol-fueled vehicles (heating of the sample lines may be omitted, provided the methanol and formaldehyde sample collection systems are close coupled to the probes

thereby preventing loss of sample due to cooling and resulting condensation in the sample lines), and associated valves, pressure and temperature sensors. The PDP–CVS shall conform to the following requirements:

(1) Static pressure variations at the tailpipe(s) of the vehicle shall remain within ±5 inches of water (1.2 kPa) of the static pressure variations measured during a dynamometer driving cycle with no connection to the tailpipe(s). (Sampling systems capable of maintaining the static pressure to within ±1 inch of water (0.25 kPa) will be used by the Administrator if a written request substantiates the need for this closer tolerance.)

(2) The gas mixture temperature, measured at a point immediately ahead of the positive displacement pump, shall be within ±10 °F (±5.6 °C) of the designed operating temperature at the start of the test. The gas mixture temperature variation from its value at the start of the test shall be limited to ±10 °F (±5.6 °C) during the entire test. The temperature measuring system shall have an accuracy and precision of ±2 °F (1.1 °C).

(3) The pressure gauges shall have an accuracy and precision of ±1.6 inches of water (0.4 kPa).

(4) The flow capacity of the CVS shall be large enough to eliminate water condensation in the system. (300 to 350 cfm (0.142 to 0.165 m^3/s) is sufficient for most petroleum-fueled vehicles. Higher flow rates are required for methanol fueled vehicles. Procedures for determining CVS flow rates are detailed in''Calculation of Emissions and Fuel Economy When Using Alternative Fuels,'' EPA 460/3–83–009.)

(5) Sample collection bags for dilution air and exhaust samples shall be of sufficient size so as not to impede sample flow. A single dilution air sample, covering the total test period, may be collected for determination of formaldehyde background (methanol-fueled vehicles).

(6) The methanol sample collection system and the formaldehyde sample collection system shall each be of sufficient capacity so as to collect samples of adequate size for analysis without significant impact on the volume of dilute exhaust passing through the PDP.

(c) *Component description, CFV-CVS.* The CFV-CVS sample system, Figure B90–4, consists of a dilution air filter and mixing assembly, a cyclone particulate separator, unheated sampling venturies for the bag samples, and for the methanol and formaldehyde samples from methanol-fueled vehicles, samples lines heated to 235°±15 °F (113°±8 °C) for the methanol and formaldehyde samples from methanol fueled vehicles (heating of the sample lines may be omitted provided, the methanol and formaldehyde sample collection systems are close coupled to the probes thereby preventing loss of sample due to cooling and resulting condensation in the sample lines), a critical flow venturi, and assorted valves, and pressure and temperature sensors. The CFV sample system shall conform to the following requirements:

(1) Static pressure variations at the tailpipe(s) of the vehicle shall remain within ±5 inches of water (1.2 kPa) of the static pressure variations measured during a dynamometer driving cycle with no connection to the tailpipe(s). (Sampling systems capable of maintaining the static pressure to within ±1 inch of water (0.25 kPa) will be used by the Administrator if a written request substantiates the need for this closer tolerance.)

(2) The temperature measuring system shall have an accuracy and precision of ±2 °F (1.1 °C) and a response time of 0.100 seconds to 62.5 percent of a temperature change (as measured in hot silicone oil).

(3) The pressure measuring system shall have an accuracy and precision of ±1.6 inches of water (0.4 kPa).

(4) The flow capacity of the CVS shall be large enough to virtually eliminate water condensation in the system (300 to 350 cfm (0.142 to 0.165 m^3/s) is sufficient for most petroleum-fueled vehicles). Higher flow rates are required with methanol-fueled vehicles. Procedures for determining CVS flow rates are detailed in''Calculation of Emission and Fuel Economy When Using Alternative Fuels,'' EPA 460/3–83–009.

(5) Sample collection bags for dilution air and exhaust samples shall be of sufficient size so as not to impede sample flow. A single dilution air sample covering the total test period may be

collected for determination of formaldehyde background for methanol-fueled vehicles.

(6) The methanol sample collection system and the formaldehyde sample collection system shall each be of sufficient capacity so as to collect samples of adequate size for analysis without significant impact on the volume of dilute exhaust passing through the CFV-CVS.

[54 FR 14500, Apr. 11, 1989]

§ 86.109–94 Exhaust gas sampling system; Otto-cycle vehicles not requiring particulate emission measurements.

(a)(1) *General.* The exhaust gas sampling system described in this paragraph is designed to measure the true mass of gaseous emissions in the exhaust of either Otto-cycle light-duty vehicles or light-duty trucks which are waived from requirements for the measurement of particulate emissions. In the CVS concept of measuring mass emissions, two conditions must be satisfied: the total volume of the mixture of exhaust and dilution air must be measured, and a continuously proportioned volume of sample must be collected for analysis. Mass emissions are determined from the sample concentration and total flow over the test period.

(2) *Vehicle tailpipe to CVS Duct.* For methanol-fueled vehicles, cooling of the exhaust gases in the duct connecting the vehicle tailpipe to the CVS shall be minimized. This may be accomplished by:

(i) Using a duct of unrestricted length maintained at a temperature above the maximum dew point of the exhaust, but below 250 °F (121 °C); heating and possibly cooling capabilities are required; or

(ii) Using a short duct (up to 12 feet long) constructed of smooth wall pipe with a minimum of flexible sections, maintained at a temperature above the maximum dew point of the exhaust, but below 250 °F (121 °C), prior to the test and during the 10 minute hot soak segment and uninsulated during the test (insulation may remain in place and/or heating may occur during testing provided maximum temperature is not exceeded); or

(iii) Using smooth wall duct less than five feet long with no required heating. A maximum of two short flexible connectors are allowed under this option; or

(iv) Omitting the duct and performing the exhaust gas dilution function at the vehicle tailpipe exit.

(3) *Positive displacement pump.* The Positive Displacement Pump-Constant Volume Sampler (PDP-CVS), Figure B94–1 satisfies the first condition by metering at a constant temperature and pressure through the pump. The total volume is measured by counting the revolutions made by the calibrated positive displacement pump. The proportional samples for the bag sample, and for methanol-fueled vehicles, the methanol sample (Figure B94–2) and the formaldehyde sample (Figure B94–3), are achieved by sampling at a constant flow rate. For methanol-fueled vehicles, the sample lines for the methanol and formaldehyde samples are heated to prevent condensation. The temperature of the sample lines shall be more than 5 °F (3 °C) above the maximum dew point of the sample, but below 250 °F (121 °C). (Note: For 1990 through 1994 model year methanol-fueled vehicles, methanol and formaldehyde sampling may be omitted provided the bag sample (hydrocarbons and methanol) is analyzed using a HFID calibrated with methanol.)

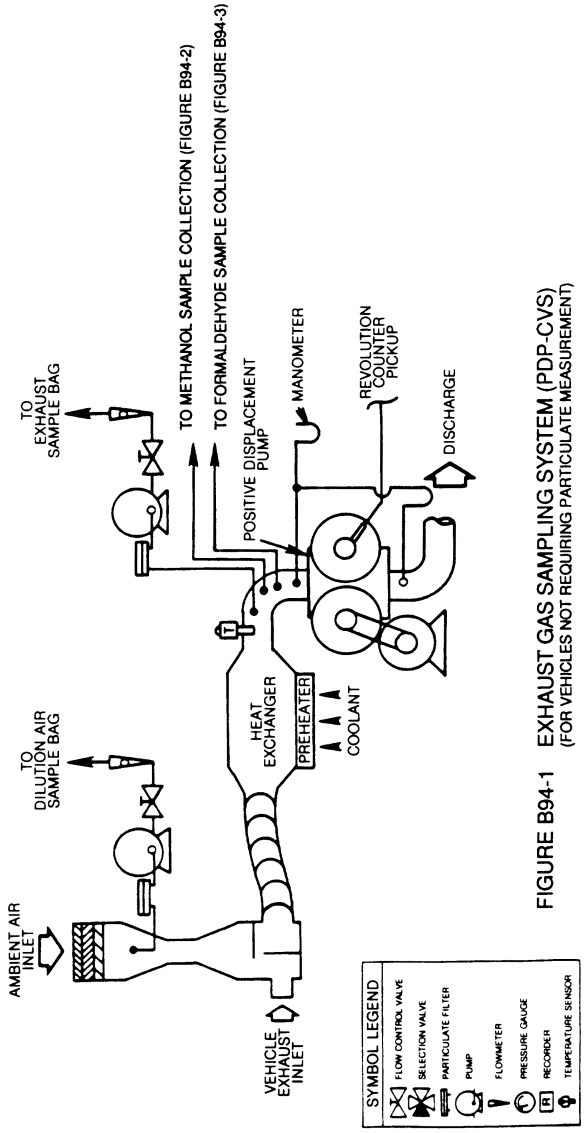

FIGURE B94-1 EXHAUST GAS SAMPLING SYSTEM (PDP-CVS)
(FOR VEHICLES NOT REQUIRING PARTICULATE MEASUREMENT)

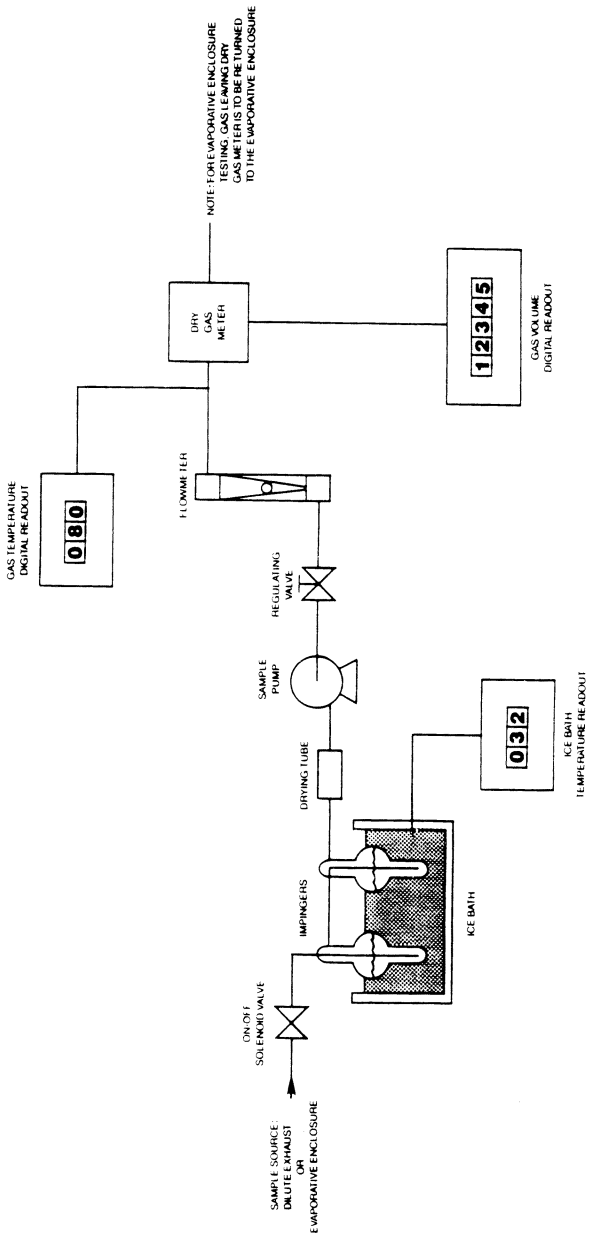

FIGURE B94-2 METHANOL SAMPLE COLLECTION FLOW SCHEMATIC

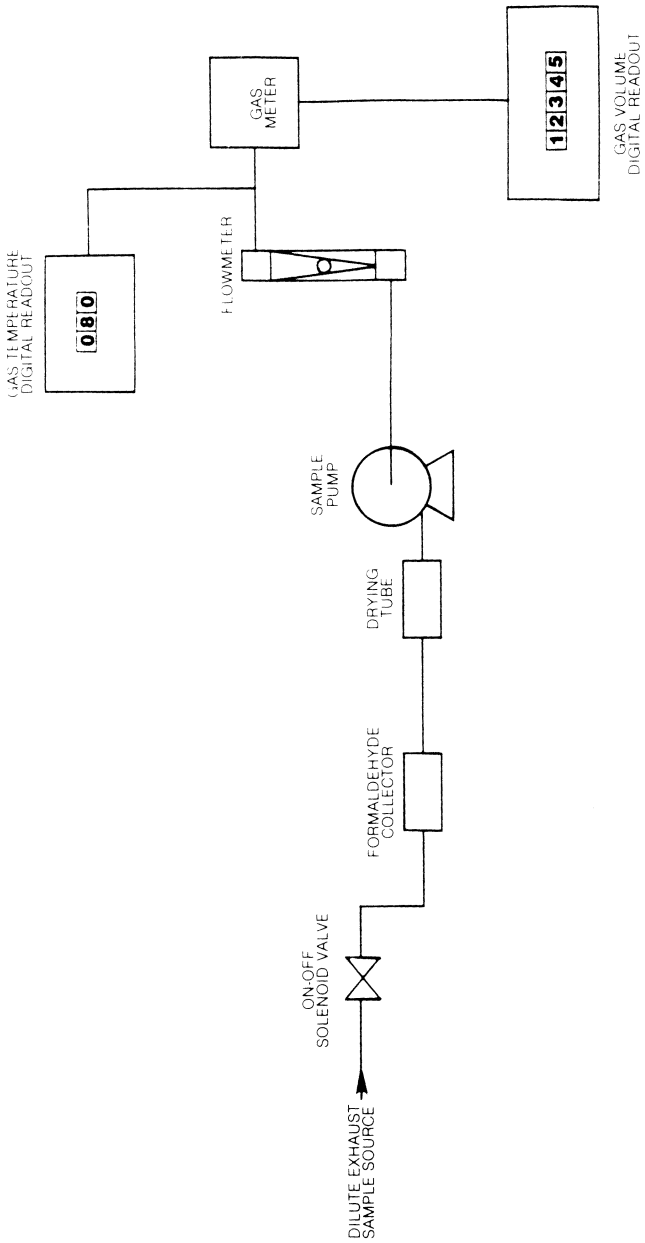

FIGURE B94-3 FORMALDEHYDE SAMPLE COLLECTION FLOW SCHEMATIC

(4) *Critical flow venturi.* The operation of the Critical Flow Venturi-Constant Volume Sampler (CFV-CVS) sample system, Figure B94–4, is based upon the principles of fluid dynamics associated with critical flow. Proportional sampling throughout temperature excursions is maintained by use of small

CFVs in the sample lines (for methanol-fueled vehicles, one line supplies sample for the bag sample, another line supplies sample for the methanol sample, and a third line supplies sample for the formaldehyde sample.) The methanol and formaldehyde sample lines are heated to prevent condensation. The temperature of the sample lines shall be more than 5 °F (3 °C) above the maximum dew point of the sample, but below 250 °F (121 °C). Care should be taken to ensure that the CFVs of the sample probes are not heated since heating of the CFVs would cause loss of proportionality. The variable mixture flow rate is maintained at sonic velocity, is inversely proportional to the square root of the gas temperature, and is computed continuously. Since the pressure and temperature are the same at all venturi inlets, the sample volume is proportional to the total volume. (Note: For 1990 through 1994 model year methanol-fueled vehicles, methanol and formaldehyde sampling may be omitted provided the bag sample (hydrocarbons and methanol) is analyzed using a HFID calibrated with methanol.)

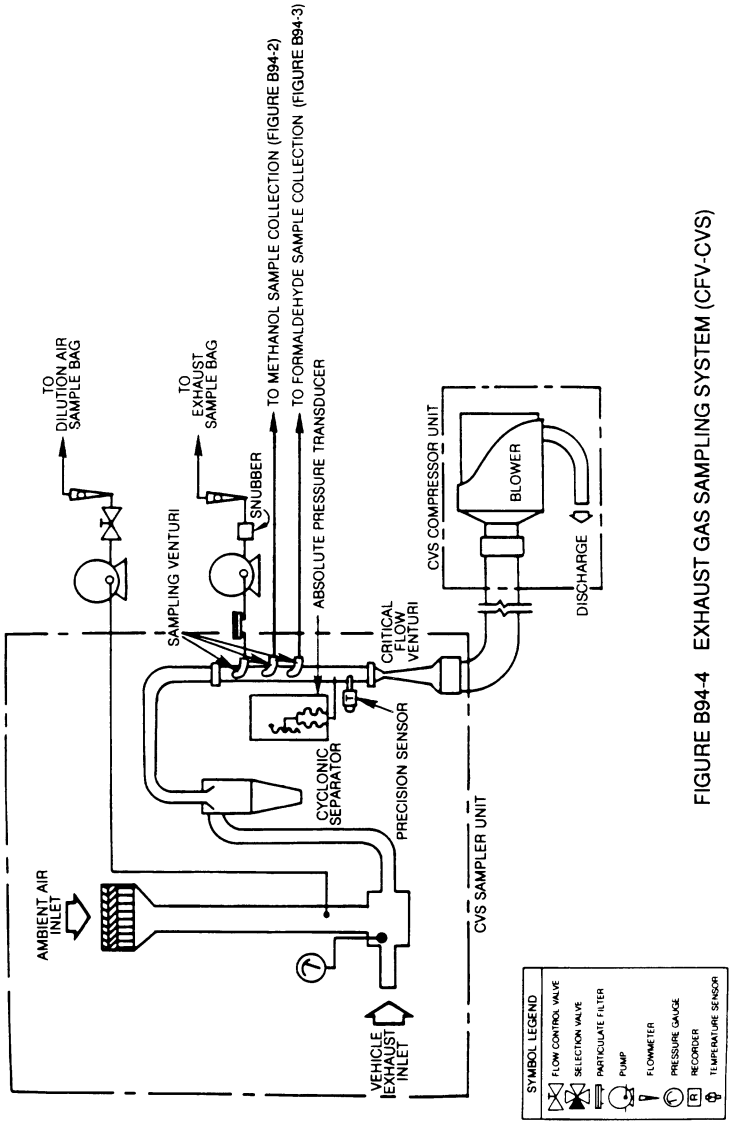

FIGURE B94-4 EXHAUST GAS SAMPLING SYSTEM (CFV-CVS)

(5) *Electronic flow control.* The Critical Flow Venturi-Electronic Flow Control-Constant Volume Sampler (CFV-EFC-CVS) system is identical to the CFV-CVS system described in paragraphs (a)(4) and (c) of this section, except that it maintains proportional sampling for methanol and formaldehyde by measuring the CVS flow rate, and electronically controlling sample flow rates. For methanol-fueled vehicles, the samples lines for the methanol and formaldehyde samples are heated to prevent condensation. The temperature of the sample lines shall be more than 5 °F (3 °C) above the maximum dew

point of the sample, but below 250 °F (121 °C).

(6) *Other systems.* Other sampling systems may be used if shown to yield equivalent or superior results, and if approved in advance by the Administrator.

(b) *Component description, PDP-CVS.* The PDP-CVS, Figure B94–1, consists of a dilution air filter and mixing assembly, heat exchanger, positive displacement pump, sampling systems (see Figure B94–2 for methanol sampling system and Figure B94–3 for formaldehyde sampling system) sampling lines which are heated to a temperature that is more than 5 °F (3 °C) above the maximum dew point of the sample, but below 250 °F (121 °C) in the case of the methanol-fueled vehicles (heating of the sample lines may be omitted, provided the methanol and formaldehyde sample collection systems are close coupled to the probes thereby preventing loss of sample due to cooling and resulting condensation in the sample lines), and associated valves, pressure and temperature sensors. The PDP-CVS shall conform to the following requirements:

(1) Static pressure variations at the tailpipe(s) of the vehicle shall remain within ±5 inches of water (1.2 kPa) of the static pressure variations measured during a dynamometer driving cycle with no connection to the tailpipe(s). (Sampling systems capable of maintaining the static pressure to within ±1 inch of water (0.25 kPa) will be used by the Administrator if a written request substantiates the need for this closer tolerance.)

(2) The gas mixture temperature, measured at a point immediately ahead of the positive displacement pump, shall be within ±10 °F (±5.6 °C) of the designed operating temperature at the start of the test. The gas mixture temperature variation from its value at the start of the test shall be limited to ±10 °F (±5.6 °C) during the entire test. The temperature measuring system shall have an accuracy and precision of ±2 °F (1.1 °C).

(3) The pressure gauges shall have an accuracy and precision of ±1.6 inches of water (0.4 kPa).

(4) The flow capacity of the CVS shall be large enough to completely eliminate water condensation in the dilution and sampling systems. (300 to 350 cfm (0.142 to 0.165 m^3/s) is sufficient for most petroleum-fueled vehicles. Higher flow rates are required for methanol-fueled vehicles and may be required for natural gas-fueled and liquefied petroleum gas-fueled vehicles. Procedures for determining CVS flow rates are detailed in ''Calculation of Emissions and Fuel Economy When Using Alternative Fuels,'' EPA 460/3–83–009.) (Copies may be obtained from U.S. Department of Commerce, NTIS, Springfield, Virginia 22161; order #PB84104702.) Dehumidifying the dilution air before entering the CVS is allowed. Hearing the dilution air is also allowed, provided:

(i) The air (or air plus exhaust gas) temperature does not exceed 250 °F.

(ii) Calculation of the CVS flow rate necessary to prevent water condensation is based on the lowest temperature encountered in the CVS prior to sampling. (It is recommended that the CVS system be insulated when heated dilution air is used.)

(iii) The dilution ratio is sufficiently high to prevent condensation in bag samples as they cool to room temperature.

(5) Sample collection bags for dilution air and exhaust samples shall be of sufficient size so as not to impede sample flow. A single dilution air sample, covering the total test period, may be collected for the determination of methanol and formaldehyde background (methanol-fueled vehicles).

(6) The methanol sample collection system and the formaldehyde sample collection system shall each be of sufficient capacity so as to collect samples of adequate size for analysis without significant impact on the volume of dilute exhaust passing through the PDP. The systems shall also comply with the following requirements that apply to the design of the systems, not to individual tests.

(i) The methanol system shall be designed such that, if a test vehicle emitted the maximum allowable level of methanol (based on all applicable standards) during the first phase of the test, the measured concentration in the primary impinger would exceed either 25 mg/l or a concentration equal to 25 times the limit of detection for the

GC analyzer. Sampling systems for all phases shall be identical.

(ii) The formaldehyde system shall be designed such that, if a test vehicle emitted formaldehyde at a rate equal to twenty percent of the maximum allowable level of NMHCE (i.e., 0.05 g/mi for a 0.25 g/mi NMHCE standard), or the maximum formaldehyde level allowed by a specific formaldehyde standard, whichever is less, during the first phase of the test, the concentration of formaldehyde in the DNPH solution of the primary impinger, or solution resulting from the extraction of the DNPH cartridge, shall exceed either 2.5 mg/l or a concentration equal to 25 times the limit of detection for the HPLC analyzer. Sampling systems for all phases shall be identical.

(iii) The methanol and formaldehyde impinger systems shall be designed such that the primary impinger collects at least 90 percent of the analyte in the samples. The remaining analyte shall be collected by the secondary impinger. This requirement does not apply to dilution air samples, since they do not require secondary impingers, or to samples in which the concentrations approach the limit of detection.

(c) *Component description, CFV-CVS.* The CFV-CVS sample system, Figure B94–4, consists of a dilution air filter and mixing assembly, a cyclone particulate separator, unheated sampling venturies for the bag samples, and for the methanol and formaldehyde samples from methanol-fueled vehicles, samples lines heated to a temperature that is more than 5 °F (3 °C) above the maximum dew point of the sample, but below 250 °F (121 °C) for the methanol and formaldehyde samples from methanol fueled vehicles (heating of the sample lines may be omitted provided, the methanol and formaldehyde sample collection systems are close coupled to the probes thereby preventing loss of sample due to cooling and resulting condensation in the sample lines), a critical flow venturi, and assorted valves, and pressure and temperature sensors. The CFV sample system shall conform to the following requirements:

(1) Static pressure variations at the tailpipe(s) of the vehicle shall remain within ±5 inches of water (1.2 kPa) of the static pressure variations measured during a dynamometer driving cycle with no connection to the tailpipe(s). (Sampling systems capable of maintaining the static pressure to within ±1 inch of water (0.25 kPa) will be used by the Administrator if a written request substantiates the need for this closer tolerance.)

(2) The temperature measuring system shall have an accuracy and precision of ±2 °F (1.1 °C) and a response time of 0.100 seconds to 62.5 percent of a temperature change (as measured in hot silicone oil).

(3) The pressure measuring system shall have an accuracy and precision of ±1.6 inches of water (0.4 kPa).

(4) The flow capacity of the CVS shall be large enough to completely eliminate water condensation in the dilution and sampling systems. (300 to 350 cfm (0.142 to 0.165 m^3/s) is sufficient for most petroleum-fueled vehicles. Higher flow rates are required for methanol-fueled vehicles and may be required for natural gas-fueled and liquefied petroleum gas-fueled vehicles. Procedures for determining CVS flow rates are detailed in ''Calculation of Emissions and Fuel Economy When Using Alternative Fuels,'' EPA 460/3–83–009.) Dehumidifying the dilution air before entering the CVS is allowed. Heating the dilution air is also allowed, provided:

(i) The air (or air plus exhaust gas) temperature does not exceed 250 °F (121 °C).

(ii) Calculation of the CVS flow rate necessary to prevent water condensation is based on the lowest temperature encountered in the CVS prior to sampling. (It is recommended that the CVS system be insulated when heated dilution air is used.)

(iii) The dilution ratio is sufficiently high to prevent condensation in bag samples as they cool to room temperature.

(5) Sample collection bags for dilution air and exhaust samples shall be of sufficient size so as not to impede sample flow. A single dilution air sample, covering the total test period, may be collected for the determination of methanol and formaldehyde background (methanol-fueled vehicles).

(6) The methanol sample collection system and the formaldehyde sample

collection system shall each be of sufficient capacity so as to collect samples of adequate size for analysis without significant impact on the volume of dilute exhaust passing through the CVS. The systems shall also comply with the following requirements that apply to the design of the systems, not to individual tests.

(i) The methanol system shall be designed such that, if a test vehicle emitted the maximum allowable level of methanol (based on all applicable standards) during the first phase of the test, the measured concentration in the primary impinger would exceed either 25 mg/l or a concentration equal to 25 times the limit of detection for the GC analyzer. Sampling systems for all phases shall be identical.

(ii) The formaldehyde system shall be designed such that, if a test vehicle emitted formaldehyde at a rate equal to twenty percent of the maximum allowable level of NMHCE (i.e., 0.05 g/mi for a 0.25 g/mi NMHCE standard), or the maximum formaldehyde level allowed by a specific formaldehyde standard, whichever is less, during the first phase of the test, the concentration of formaldehyde in the DNPH solution of the primary impinger, or solution resulting from the extraction of the DNPH cartridge, shall exceed either 2.5 mg/l or a concentration equal to 25 times the limit of detection for the HPLC analyzer. Sampling systems for all phases shall be identical.

(iii) The methanol and formaldehyde systems shall be designed such that the primary impinger collects at least 90 percent of the analyte in the samples. The remaining analyte shall be collected by the secondary impinger. This requirement does not apply to dilution air samples, since they do not require secondary impingers, or to samples in which the concentrations approach the limit of detection.

(d) *Component description, CFV-EFC-CVS.* The CVS sample system is identical to the system described in paragraph (c) of this section, plus includes a means of electronically measuring the CVS flow rate, and electronic mass flow controllers for the methanol and formaldehyde sample lines. The EFC sample system shall conform to all of the requirements listed in paragraph (c), except that the methanol and formaldehyde samples must both be drawn from a static probe. It also must comply with the following additional requirements:

(1) The ratio of the CVS mass flow rate to the sample mass flow rate shall not deviate from the design ratio by more than ±5 percent. (The volumetric sample flow rate shall be varied inversely with the square root of the bulk stream temperature.)

(2) Flow meters to totalize sample volumes for methanol and/or formaldehyde samples shall meet the accuracy specifications of § 86.120. Total sample volumes may be obtained from the flow controllers, provided that the controllers meet the accuracy specifications of § 86.120.

[56 FR 25760, June 5, 1991, as amended at 59 FR 48505, Sept. 21, 1994; 60 FR 34336, June 30, 1995]

§ 86.110–90 Exhaust gas sampling system; diesel vehicles.

(a) *General.* The exhaust gas sampling system described in this paragraph is designed to measure the true mass of both gaseous and particulate emissions in the exhaust of either diesel light-duty vehicles and light-duty trucks. This system utilizes the CVS concept (described in § 86.109) of measuring mass emissions. The mass of gaseous emissions is determined from the sample concentration and total flow over the test period. The mass of particulate emissions is determined from a proportional mass sample collected on a filter and from the total flow over the test period. General requirements are as follows:

(1) This sampling system requires the use of a PDP-CVS or a CFV sample system with heat exchanger connected to a dilution tunnel. Figure B90–5 is a schematic drawing of the PDP system. Figure B90–6 is a schematic drawing of the CFV system (methanol-fueled Otto-cycle vehicles may be tested using this test equipment.)

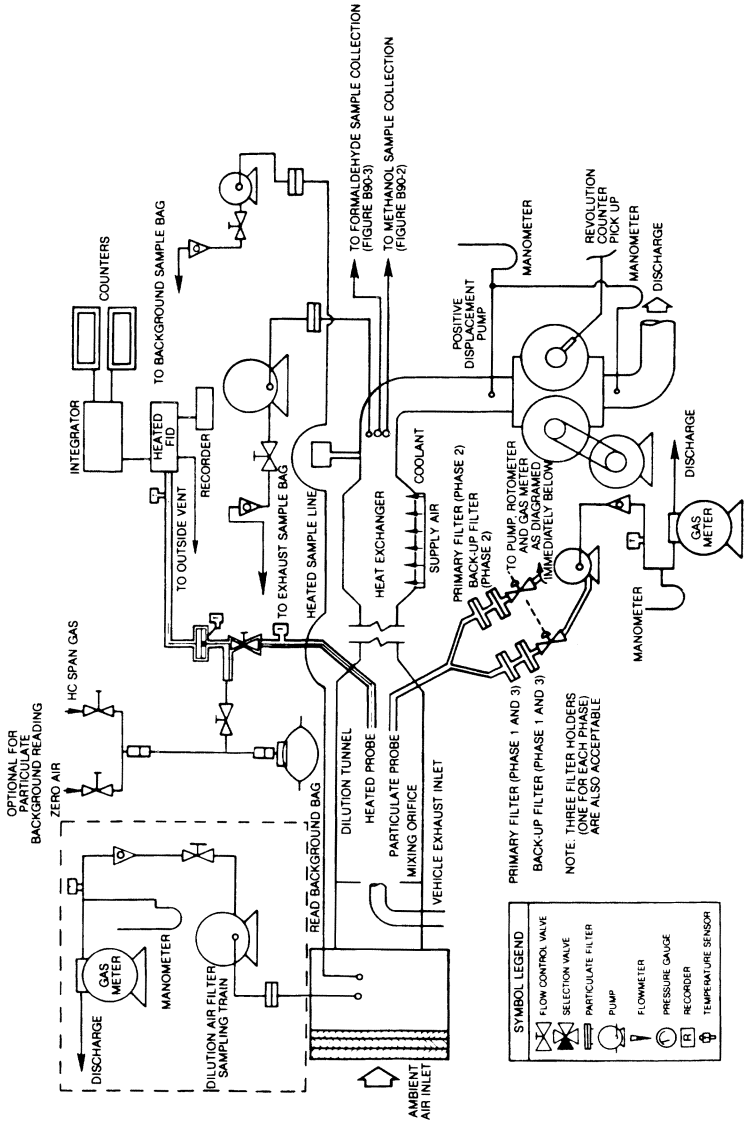

FIGURE B90-5
GASEOUS AND PARTICULATE EMISSIONS SAMPLING SYSTEM (PDP-CVS)

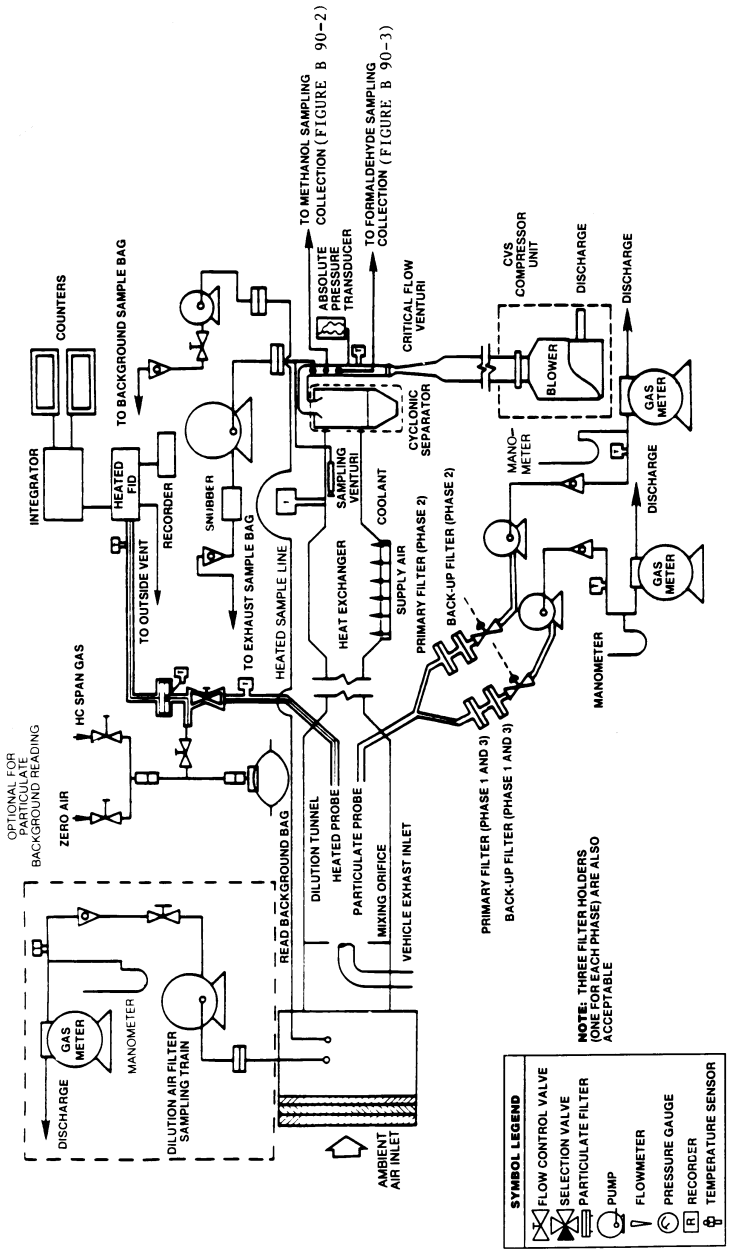

FIGURE B90–6

GASEOUS AND PARTICULATE EMISSIONS SAMPLING SYSTEM (CFV-CVS)

(2) Bag, HFID, and particulate sampling capabilities as shown in Figure B90–5 (or Figure B90–6) are required to provide both gaseous and particulate emissions sampling capabilities from a single system.

(3) Petroleum-fueled diesel vehicles require a heated flame ionization detector (HFID) (375°±20 °F (191°±11 °C)) sample for hydrocarbon analysis. The HFID sample must be taken directly from the diluted exhaust stream through a heated probe in the dilution tunnel.

(4) Methanol-fueled vehicles require the use of a heated flame ionization detector (HFID) (235°±15 °F (113°±8 °C)) for hydrocarbon analysis. With an HFID, the hydrocarbon analysis can be made on the bag sample and the methanol and formaldehyde analyses are performed on the samples collected for these purposes (Figures B90–2 and B90–3). NOTE: For 1990 through 1994 model year methanol-fueled vehicles, methanol and formaldehyde sampling may be omitted provided the bag sample is analyzed using a HFID calibrated with methanol.

(5) Methanol-fueled vehicles require either:

(i) A tailpipe to dilution tunnel duct of unrestricted length maintained at 235° ±15 °F (113° ±8 °C) through heating and cooling as required; or

(ii) Using short duct (up to 12 feet long) constructed of smooth wall pipe with a minimum of flexible sections maintained at 235° ±15 °F (113° ±8 °C) prior to the test and during breaks in testing (insulation may remain in place and/or heating may occur during testing provided maximum temperature is not exceeded); or

(iii) Using a smooth wall duct less than five feet long with no required heating, or

(iv) Omitting the duct and performing the exhaust gas dilution function at the vehicle tailpipe exit.

(6) Since various configurations can produce equivalent results, exact conformance with these drawings is not required. Additional components such as instruments, valves, solenoids, pumps, and switches may be used to provide additional information and coordinate the functions of the component systems.

(7) Other sampling systems may be used if shown to yield equivalent results and if approved in advance by the Administrator.

(b) *Component description—petroleum-fueled diesel vehicles.* The components necessary for petroleum fueled diesel vehicle exhaust sampling shall meet the following requirements:

(1) The PDP-CVS, Figure B90–5, shall conform to all of the requirements listed for the exhaust gas PDP-CVS (§ 86.109(b)), with one exception: a flow rate of sufficient volume is required to maintain the diluted exhaust stream, from which the particulate sample flow is taken, at a temperature of 125 °F (52 °C) or less.

(2) The CFV sample system, Figure B90–6, shall conform to all of the requirements listed for the exhaust gas CFV sample system (§ 86.109(c)), with four exceptions:

(i) A flow rate of sufficient volume is required to maintain the diluted exhaust stream, from which the particulate sample flow is taken, at a temperature of 125 °F (52 °C) or less.

(ii) A heat exchanger is required.

(iii) The gas mixture temperature, measured at a point immediately ahead of the critical flow venturi, shall be within ±20 °F (11 °C) of the designed operating temperature at the start of the test. The gas mixture temperature variation from its value at the start of the test shall be limited to ±20 °F (11 °C) during the entire test. The temperature measuring system shall have an accuracy and precision of ±2 °F (1.1 °C).

(iv) The cyclonic separator is optional.

(3) The transfer of heat from the vehicle exhaust gas shall be minimized between the point where it leaves the vehicle tailpipe(s) and the point where it enters the dilution tunnel airstream. To accomplish this, a short length (not more than 12 feet (365 cm) if uninsulated, or not more than 20 feet (610 cm) if insulated) of smooth stainless steel tubing from the tailpipe to the dilution tunnel is required. This tubing shall have a maximum inside diameter of 4.0 inches (10.2 cm). Short sections of flexible tubing at connection points are allowed.

(4) The vehicle exhaust shall be directed downstream at the point where it is introduced into the dilution tunnel.

(5) The dilution air shall be between 68 °F (20 °C) and 86 °F (30 °C) during the test.

(6) The dilution tunnel shall be:

(i) Sized to permit development of turbulent flow (Reynold's No. >>4000) and complete mixing of the exhaust and dilution air between the mixing orifice and each of the two sample probes (*i.e.*, the particulate probe and the heated HC sample probe). It is recommended that uniform mixing be demonstrated by the user.

(ii) At least 8.0 inches (20.3 cm) in diameter.

(iii) Constructed of electrically conductive material which does not react with the exhaust components.

(iv) Grounded.

(7) The temperature of the diluted exhaust stream inside of the dilution tunnel shall be sufficient to prevent water condensation. However, the sample zone dilute exhaust temperature shall not exceed 125 °F (52 °C) at any time during the test.

(8) The particulate sample probe shall be:

(i) Installed facing upstream at a point where the dilution air and exhaust are well mixed (*i.e.*, near the tunnel centerline, approximately 10 tunnel diameters downstream from the point where the exhaust enters the dilution tunnel).

(ii) Sufficiently distant (radially) from the total hydrocarbon probe so as to be free from the influence of any wakes or eddies produced by the total hydrocarbon probe.

(iii) 0.5 inch (1.27 cm) minimum inside diameter.

(iv) The distance from the sampling tip to the filter holder shall be at least 5 probe diameters (for filters located inside of the tunnel), but not more than 40.0 inches (102 cm) for filters located outside of the dilution tunnel.

(v) Free from sharp bends.

(vi) Configured so that a clean particulate filter (including back-up filter) can be selected simultaneously with the selection of an empty gaseous emissions bag.

(9) The flow rate through the particulate probe shall be maintained to a constant value within ±5 percent of the set flow rate.

(10) The particulate sample pump shall be located sufficiently distant from the dilution tunnel so that the inlet gas temperature is maintained at a constant temperature (±5.0 °F (2.8 °C)).

(11) The gas meters or flow instrumentation shall be located sufficiently distant from the tunnel so that the inlet gas temperature remains constant (±5.0 °F (2.8 °C)).

(12) The total hydrocarbon probe shall be:

(i) Installed facing upstream at a point where the dilution air and exhaust are well mixed (*i.e.*, approximately 10 tunnel diameters downstream from the point where the exhaust enters the dilution tunnel).

(ii) Sufficiently distant (radially) from the particulate probe so as to be free from the influence of any wakes or eddies produced by the particulate probe.

(iii) Heated and insulated over the entire length to maintain a 375°±20 °F (191°±11 °C) *wall* temperature.

(iv) 0.19 in. (0.48 cm) minimum inside diameter.

(13) It is intended that the total hydrocarbon probe be free from cold spots (*i.e.*, free from spots where the probe *wall* temperature is less than 355 °F). This will be determined by a temperature sensor located on a section of the probe wall outside of the dilution tunnel. The temperature sensor shall be insulated from any heating elements on the probe. The sensor shall have an accuracy and precision of ±2 °F (1.1 °C).

(14) The dilute exhaust gas flowing in the total hydrocarbon sample system shall be:

(i) At 375 °F±10 °F (191 °C±6 °C) immediately before the heated filter. This will be determined by a temperature sensor located immediately upstream of the filter. The sensor shall have an accuracy and precision of ±2 °F (1.1 °C).

(ii) At 375 °F±10 °F (191 °C±6 °C) immediately before the HFID. This will be determined by a temperature sensor located at the exit of the heated sample line. The sensor shall have an accuracy and precision of ±2 °F (1.1 °C).

(15) It is intended that the dilute exhaust gas flowing in the total hydrocarbon sample system be between 365 °F and 385 °F (185 °C and 197 °C).

(c) *Component description—methanol-fueled diesel vehicles.* The components necessary for methanol-fueled diesel

vehicle exhaust sampling shall meet the following requirements:

(1) The PDP-CVS, Figure B90–5 shall conform to all of the requirements listed for the exhaust gas PDP-CVS (§ 86.109 (a)(3) and (b)), with one exception: a flow rate of sufficient volume is required to maintain the diluted exhaust stream, from which the particulate sample flow is taken, at a temperature of 125 °F (52 °C) or less and shall prevent the condensation of water vapor in the dilution tunnel.

(2) The CFV sample system, Figure B90–6 shall conform to all of the requirements listed for the exhaust gas CFV sample system (§ 86.109 (a)(4) and (c)), with four exceptions:

(i) A flow rate of sufficient volume is required to maintain the diluted exhaust stream, from which the particulate sample flow is taken, at a temperature of 125 °F (52 °C) or less and shall prevent the condensation of water vapor in the dilution tunnel.

(ii) A heat exchanger is required.

(iii) The gas mixture temperature, measured at a point immediately ahead of the critical flow venturi, shall be within ±20 °F (11 °C) of the designed operating temperature at the start of the test. The gas mixture temperature variation from its value at the start of the test shall be limited to ±20 °F (11 °C) during the entire test. The temperature measuring system shall have an accuracy and precision of ±2 °F (1.1 °C).

(iv) The cyclonic separator is optional.

(3) Losses of methanol due to condensation of water in the duct connecting the vehicle tail pipe to the dilation tunnel must be minimized. This may be accomplished by:

(i) The use of a duct of unrestricted length maintained at 235°±15 °F (113°±8 °C) through heating and cooling as required, or

(ii) The use of a short duct (up to 12 feet long) constructed of smooth wall pipe with a minimum of flexible sections maintained at 235°±15 °F (113°±8 °C) prior to the test and during breaks in testing (insulation may remain in place and/or heating may occur during testing provided maximum temperature is not exceeded); or

(iii) Using a smooth wall duct less than five feet long with no required heating, or

(iv) Omitting the duct and performing the exhaust gas dilution function at the vehicle tailpipe exit.

(4) The vehicle exhaust shall be directed downstream at the point where it is introduced into the dilution tunnel.

(5) The dilution air shall be between 68 °F (20 °C) and 86 °F (30 °C) during the test.

(6) The dilution tunnel shall be:

(i) Sized to permit development of turbulent flow (Reynold's No. >>4000) and complete mixing of the exhaust and dilution air between the mixing orifice and the particulate sample probe. It is recommended that uniform mixing be demonstrated by the user.

(ii) At least 8.0 inches (20.3 cm) in diameter.

(iii) Constructed of electrically conductive material which does not react with the exhaust components.

(iv) Grounded.

(7) The temperature of the diluted exhaust stream inside of the dilution tunnel shall be sufficient to prevent water condensation. However, the sample zone dilute exhaust temperature shall not exceed 125 °F (52 °C) at any time during the test.

(8) The particulate sample probe shall be:

(i) Installed facing upstream at a point where the dilution air and exhaust are well mixed (*i.e.*, near the tunnel centerline, approximately 10 tunnel diameters downstream from the point where the exhaust enters the dilution tunnel).

(ii) Sufficiently distant (radially) from the total hydrocarbon probe so as to be free from the influence of any wakes or eddies produced by the total hydrocarbon probe.

(iii) 0.5 inch (1.27 cm) minimum inside diameter.

(iv) The distance from the sampling tip to the filter holder shall be at least 5 probe diameters (for filters located inside of the tunnel), but not more than 40.0 inches (102 cm) for filters located outside of the dilution tunnel.

(v) Free from sharp bends.

(vi) Configured so that a clean particulate filter (including back up filter)

can be selected simultaneously with the selection of an empty gaseous emissions bag.

(9) The flow rate through the particulate probe shall be maintained to a constant value within ±5 percent of the set flow rate.

(10) The particulate sample pump shall be located sufficiently distant from the dilution tunnel so that the inlet gas temperature is maintained at a constant temperature (±5.0 °F (2.8 °C)).

(11) The gas meters or flow instrumentation shall be located sufficiently distant from the tunnel so that the inlet gas temperature remains constant (±5.0 °F (2.8 °C)).

(12) The hydrocarbon probe shall be:

(i) Installed facing upstream at a point where the dilution air and exhaust are well mixed (*i.e.*, approximately 10 tunnel diameters downstream from the point where the exhaust enters the dilution tunnel).

(ii) Sufficiently distant (radially) from the particulate probe so as to be free from the influence of any wakes or eddies produced by the particulate probe.

(iii) Heated and insulated over the entire length to maintain a 235°±15 °F (113°±8 °C) *wall* temperature.

(iv) 0.19in. (0.48 cm) minimum inside diameter.

(13) It is intended that the total hydrocarbon probe be free from cold spots (*i.e.*, free from cold spots where the probe *wall* temperature is less than 220 °F.) This will be determined by a temperature sensor located on a section of the probe wall outside of the dilution tunnel. The temperature sensor shall be insulated from any heating elements on the probe. The sensor shall have an accuracy and precision of ±2 °F (1.1 °C).

(14) The dilute exhaust gas flowing in the hydrocarbon sample system shall be:

(i) At 235 °F±15 °F (113 °C±8 °C) immediately before the heated filter. This will be determined by a temperature sensor located immediately upstream of the filter. The sensor shall have an accuracy and precision of ±2 °F (1.1 °C).

(ii) At 235 °F±15 °F (113 °C ±8 °C) immediately before the HFID. This will be determined by a temperature sensor located at the exit of the heated sample line. The sensor shall have an accuracy and precision of ±2 °F (1.1 °C).

(15) It is intended that the dilute exhaust gas flowing in the hydrocarbon sample system be between 220 °F and 250 °F (105 °C and 121 °C).

(16) For methanol-fueled vehicles, bag sampling procedures for the measurement of hydrocarbons as described in § 86.109 may be employed.

(d) *Filters, particulate sampling.* (1) Filter acceptance criteria. Valid diesel particulate net filter weights shall be accepted according to the following criteria:

(i) During each phase of the UDDS, dilute exhaust will be simultaneously sampled by paired primary test and back-up test filters.

(ii) The back-up filter holder shall be located 3 to 4 inches downstream of the primary filter holder.

(iii) The net weight of particulate material collected on each primary test filter and each back-up test filter shall be determined by the procedure outlined in § 86.139.

(iv) A ratio of net weights will be determined by the following formula:

$$\text{Ratio of net weights} = \frac{(\text{Mass Particulate})_{\text{primary filter}}}{(\text{Mass Particulate})_{\text{primary filter}} + (\text{Mass Particulate})_{\text{back-up filter}}}$$

(v) If the ratio is greater than 0.95, then particulate emissions calculations are based on the net weight of the primary filter only.

(vi) If the ratio is less than 0.95, then particulate emissions calculations are based on the combined net weights of the back-up test filter and the primary test filter.

(2) The particulate filter must have a minimum 47 mm diameter (37 mm stain area). Larger diameter filters are

also acceptable. (Larger diameter filters may be desirable in order to reduce the pressure drop across the filter when testing vehicles which produce large amounts of particulate.)

(3) The recommended minimum loading on the primary 47 mm filter is 0.5 milligrams. Equivalent loadings (i.e., mass/stain area) are recommended for larger filters.

(4) Fluorocarbon coated glass fiber filters or fluorocarbon-based (membrane) filters are required for particulate collection.

[54 FR 14507, Apr. 11, 1989]

§ 86.110–94 Exhaust gas sampling system; diesel-cycle vehicles, and Otto-cycle vehicles requiring particulate emissions measurements.

Section 86.110–94 includes text that specifies requirements that differ from § 86.110–90. Where a paragraph in § 86.110–90 is identical and applicable to § 86.110–94, this may be indicated by specifying the corresponding paragraph and the statement ''[Reserved]. For guidance see § 86.110–90.'' Where a corresponding paragraph of § 86.110–90 is not applicable, this is indicated by the statement ''[Reserved].''

(a) *General.* The exhaust gas sampling system described in this paragraph is designed to measure the true mass of both gaseous and particulate emissions in the exhaust of either diesel-cycle or Otto-cycle light-duty vehicles and light-duty trucks. This system utilizes the CVS concept (described in § 86.109) of measuring mass emissions. The mass of gaseous emissions is determined from the sample concentration and total flow over the test period. The mass of particulate emissions is determined from a proportional mass sample collected on a filter and from the total flow over the test period. General requirements are as follows:

(1) This sampling system requires the use of a PDP-CVS, CFV-CVS (or a CFV-EFC-CVS), sample system with heat exchanger connected to a dilution tunnel. The heat exchanger is not required for the CFV-CVS or EFC-CFV-CVS if electronic flow controllers are used to maintain proportionality for the particulate sample. Figure B94–5 is a schematic drawing of the PDP system. Figure B94–6 is a schematic drawing of the CFV-CVS system. (Methanol-fueled Otto-cycle vehicles may be tested using this test equipment, without measuring particulate emissions.)

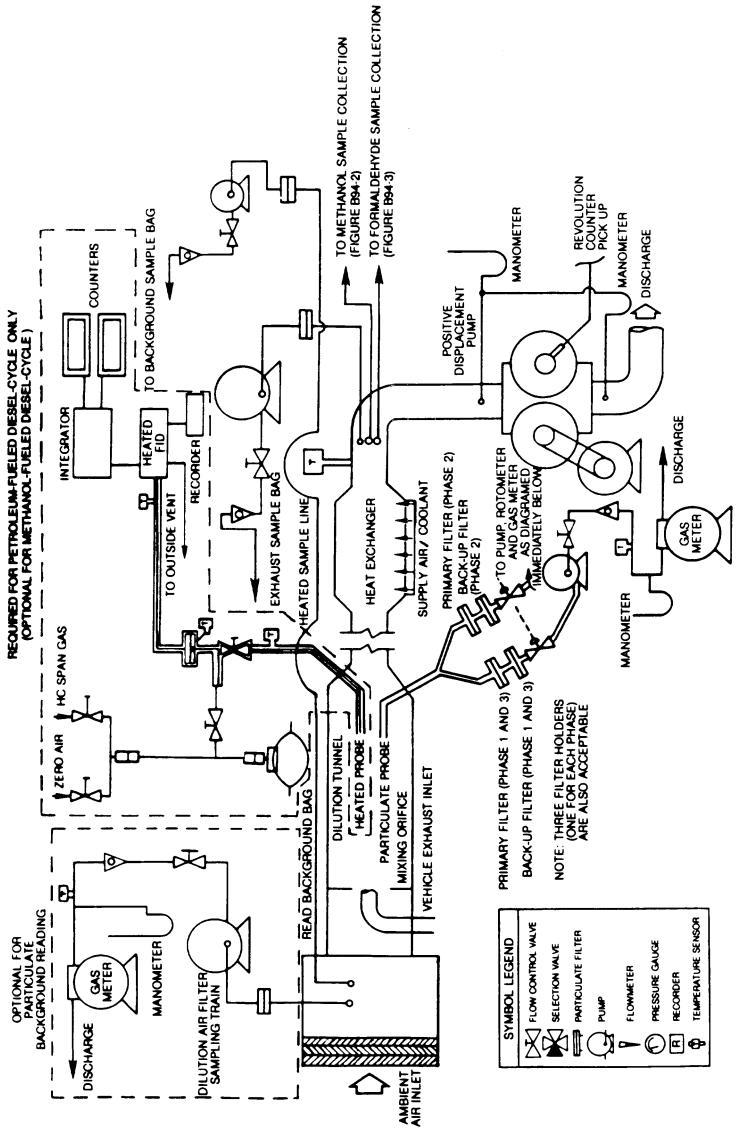

FIGURE B94-5 EXHAUST GAS SAMPLING SYSTEM (PDP-CVS)
(FOR VEHICLES REQUIRING PARTICULATE MEASUREMENT)

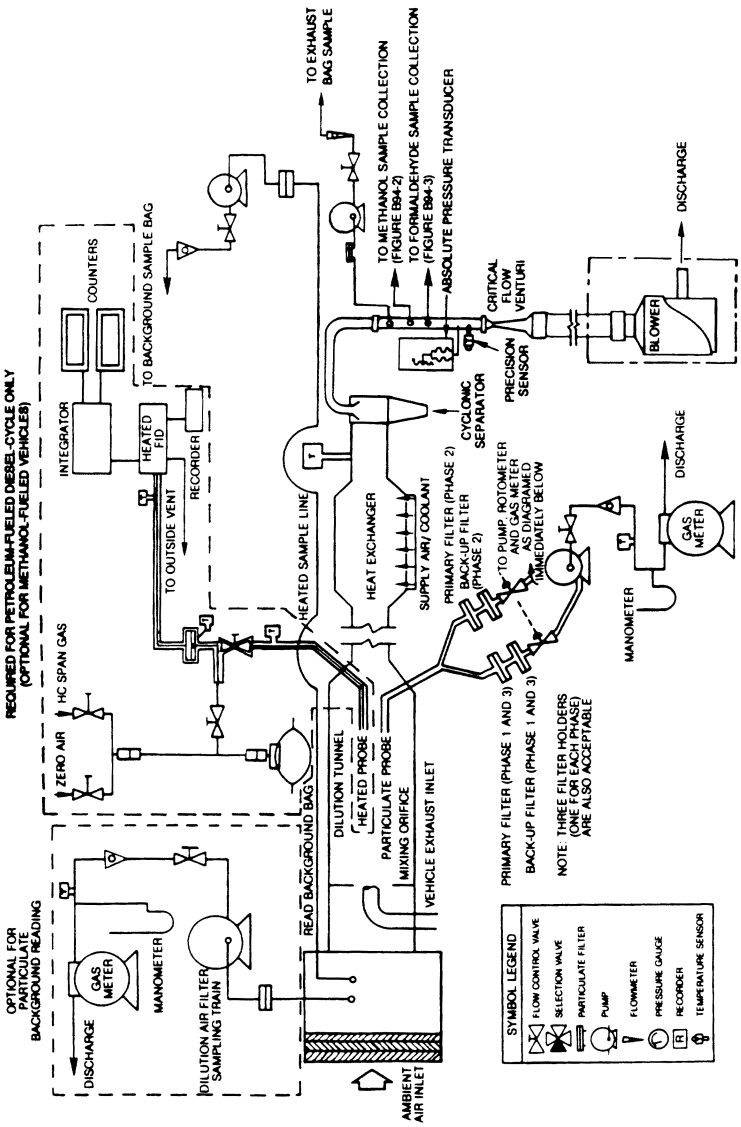

FIGURE B94-6 EXHAUST GAS SAMPLING SYSTEM (CFV-CVS)
(FOR VEHICLES REQUIRING PARTICULATE MEASUREMENT)

(2) Bag, continuous HFID (required for petroleum-fueled diesel-cycle and optional for methanol-fueled, natural gas-fueled and liquefied petroleum gas-fueled diesel-cycle vehicles), and particulate sampling capabilities as shown in Figure B94–5 (or Figure B94–6) are required to provide both gaseous and particulate emissions sampling capabilities from a single system.

(3) Petroleum-fueled diesel-cycle vehicles require a heated flame ionization detector (HFID) (375 °±20 °F (191 °±11 °C)) sample for total hydrocarbon (THC) analysis. The HFID sample must

be taken directly from the diluted exhaust stream through a heated probe in the dilution tunnel.

(4) Methanol-fueled vehicles require the use of a heated flame ionization detector (HFID) (235 °±15 °F (113 °±8 °C)) for hydrocarbon analysis. With an HFID, the hydrocarbon analysis can be made on the bag sample and the methanol and formaldehyde analyses are performed on the samples collected for these purposes (Figures B94–2 and B94–3).

NOTE: For 1990 through 1994 model year methanol-fueled vehicles, methanol and formaldehyde sampling may be omitted provided the bag sample is analyzed using a HFID calibrated with methanol.

(5) For methanol-fueled vehicles, the vehicle tailpipe-to-dilution tunnel connection shall be made by:

(i) A tailpipe to dilution tunnel duct of unrestricted length maintained at a temperature above the dew point of the mixture, but below 250 °F (121 °C) through heating and cooling as required; or

(ii) Using a short duct (up to 12 feet long) constructed of smooth wall pipe with a minimum of flexible sections maintained at a temperature above the dew point of the mixture, but below 250 °F (121 °C) prior to the test and during breaks in testing (insulation may remain in place and or heating may occur during the testing provided the maximum temperature is not exceeded); or

(iii) Using smooth wall duct less than five feet long with no required heating. A maximum of two short flexible connectors are allowed under this option; or

(iv) By omitting the duct and performing the exhaust gas dilution function at the vehicle tailpipe exit.

(6) For natural gas-fueled and liquefied petroleum gas-fueled diesel vehicles either a heated flame ionization detector (HFID) [375°±20 °F (191°±11 °C)] or a non-heated flame ionization detector may be used for hydrocarbon analysis.

(7) Since various configurations can produce equivalent results, exact conformance with these drawings is not required. Additional components such as instruments, valves, solenoids, pumps, and switches may be used to provide additional information and coordinate the functions of the component systems.

(8) Other sampling systems may be used if shown to yield equivalent or superior results and if approved in advance by the Administrator.

(b) *Component description—petroleum-fueled, natural gas-fueled and liquefied petroleum gas-fueled vehicles.* The components necessary for petroleum-fueled, natural gas-fueled and liquefied petroleum gas-fueled vehicle exhaust sampling shall meet the following requirements:

(1) The PDP-CVS, Figure B94–5, shall contain a proportional particulate sampling system, and shall conform to all of the requirements listed for the exhaust gas PDP-CVS (§ 86.109(b)), with one exception: a flow rate of sufficient volume is required to maintain the diluted exhaust stream, from which the particulate sample flow is taken, at a temperature of 125 °F (52 °C) or less.

(2) The CFV sample system, Figure B94–6, shall contain a proportional particulate sampling system, and shall conform to all of the requirements listed for the exhaust gas CFV sample system (§ 86.109(c)), except for the following:

(i) A flow rate of sufficient volume is required to maintain the diluted exhaust stream, from which the particulate sample flow is taken, at a temperature of 125 °F (52 °C) or less.

(ii) If a constant volume particulate sample is collected, a heat exchanger is required.

(iii) If a heat exchanger is used, the gas mixture temperature, measured at a point immediately ahead of the critical flow venturi, shall be within ±20 °F (11 °C) of the designed operating temperature at the start of the test. The gas mixture temperature variation from its value at the start of the test shall be limited to ±20 °F (11 °C) during the entire test. The temperature measuring system shall have an accuracy and precision of ±2 °F (1.1 °C).

(iv) The cyclonic separator is optional.

(3) For gasoline-fueled, natural gas-fueled and liquefied petroleum gas-fueled Otto-cycle and petroleum-fueled, natural gas- fueled and liquefied petroleum gas-fueled diesel-cycle vehicles, the transfer of heat from the vehicle

exhaust gas shall be minimized between the point where it leaves the vehicle tailpipe(s) and the point where it enters the dilution tunnel airstream. To accomplish this, a short length (not more than 12 feet (365 cm) if uninsulated, or not more than 20 feet (610 cm) if insulated) of smooth stainless steel tubing from the tailpipe to the dilution tunnel is required. This tubing shall have a maximum inside diameter of 4.0 inches (10.2 cm). Short sections of flexible tubing at connection points are allowed.

(4) The vehicle exhaust shall be directed downstream at the point where it is introduced into the dilution tunnel.

(5) The dilution air shall be between 68 °F (20 °C) and 86 °F (30 °C) during the test.

(6) The dilution tunnel shall be:

(i) Sized to permit development of turbulent flow (Reynold's No. <<4000) and complete mixing of the exhaust and dilution air between the mixing orifice and each of the two sample probes (i.e., the particulate probe and the heated THC sample probe). It is recommended that uniform mixing be demonstrated by the user.

(ii) At least 8.0 inches (20.3 cm) in diameter.

(iii) Constructed of electrically conductive material which does not react with the exhaust components.

(iv) Grounded.

(7) The temperature of the diluted exhaust stream inside of the dilution tunnel shall be sufficient to prevent water condensation. However, the sample zone dilute exhaust temperature shall not exceed 125 °F (52 °C) at any time during the test.

(8) The particulate sample probe shall be:

(i) Installed facing upstream at a point where the dilution air and exhaust are well mixed (i.e., near the tunnel centerline, approximately 10 tunnel diameters downstream from the point where the exhaust enters the dilution tunnel).

(ii) Sufficiently distant (radially) from the THC probe (when the THC probe is required) so as to be free from the influence of any wakes or eddies produced by the THC probe.

(iii) 0.5 inch (1.27 cm) minimum inside diameter.

(iv) The distance from the sampling tip to the filter holder shall be at least 5 probe diameters (for filters located inside of the tunnel), but not more than 40.0 inches (102 cm) for filters located outside of the dilution tunnel.

(v) Free from sharp bends.

(vi) Configured so that a clean particulate filter (including back-up filter) can be selected simultaneously with the selection of an empty gaseous emissions bag.

(9) The flow rate through the particulate probe shall be maintained to a constant value within ±5 percent of the set flow rate.

(10) The particulate sample pump shall be located sufficiently distant from the dilution tunnel so that the inlet gas temperature is maintained at a constant temperature (±5.0 °F (2.8 °C)).

(11) The gas meters or flow instrumentation shall be located sufficiently distant from the tunnel so that the inlet gas temperature remains constant (±5.0 °F (2.8 °C)).

(12) The THC probe (when the THC probe is required) shall be:

(i) Installed facing upstream at a point where the dilution air and exhaust are well mixed (i.e., approximately 10 tunnel diameters downstream from the point where the exhaust enters the dilution tunnel).

(ii) Sufficiently distant (radially) from the particulate probe so as to be free from the influence of any wakes or eddies produced by the particulate probe.

(iii) Heated and insulated over the entire length to maintain a 375 °±20 °F (191 °±11 °C) wall temperature.

(iv) 0.19 in. (0.48 cm) minimum inside diameter.

(13) It is intended that the THC probe be free from cold spots (i.e., free from spots where the probe wall temperature is less than 355 °F). This will be determined by a temperature sensor located on a section of the probe wall outside of the dilution tunnel. The temperature sensor shall be insulated from any heating elements on the probe. The sensor shall have an accuracy and precision of ±2 °F (1.1 °C).

(14) The dilute exhaust gas flowing in the THC sample system shall be:

(i) At 375 °F±10 °F (191 °C±6 °C) immediately before the heated filter. This will be determined by a temperature sensor located immediately upstream of the filter. The sensor shall have an accuracy and precision of ±2 °F (1.1 °C).

(ii) At 375 °F±10 °F (191 °C ±6 °C) immediately before the HFID. This will be determined by a temperature sensor located at the exit of the heated sample line. The sensor shall have an accuracy and precision of ±2 °F (1.1 °C).

(15) It is intended that the dilute exhaust gas flowing in the THC sample system be between 365 °F and 385 °F (185 °C and 197 °C).

(c) *Component description—methanol-fueled vehicles*. The components necessary for methanol-fueled vehicle exhaust sampling shall meet the following requirements:

(1) The PDP-CVS, Figure B94–5, shall contain a proportional particulate sampling system, and shall conform to all of the requirements listed for the exhaust gas PDP-CVS (§ 86.109), with one exception: a flow rate of sufficient volume is required to maintain the diluted exhaust stream, from which the particulate sample flow is taken, at a temperature of 125 °F (52 °C) or less.

(2) The CFV-CVS sample system, Figure B94–6, shall contain a proportional particulate sampling system, and shall conform to all of the requirements listed for the exhaust gas CFV sample system (§ 86.109), except for the following:

(i) A flow rate of sufficient volume is required to maintain the diluted exhaust stream, from which the particulate sample flow is taken, at a temperature of 125 °F (52 °C) or less.

(ii) If a constant volume particulate sample is collected, a heat exchanger is required.

(iii) If a heat exchanger is used, the gas mixture temperature, measured at a point immediately ahead of the critical flow venturi, shall be within ±20 °F (11 °C) of the designed operating temperature at the start of the test. The gas mixture temperature variation from its value at the start of the test shall be limited to ±20 °F (11 °C) during the entire test. The temperature measuring system shall have an accuracy and precision of ±2 °F (1.1 °C).

(iv) The cyclonic separator is optional.

(3) The EFC-CFV-CVS sample system shall conform to all of the requirements listed for the exhaust gas EFC sample system (§ 86.109) with three exceptions:

(i) A flow rate of sufficient volume is required to maintain the diluted exhaust stream, from which the particulate sample flow is taken, at a temperature of 125 °F (52 °C) or less.

(ii) A proportional particulate sample shall be collected using an electronic flow controller that meets the performance criteria listed in § 86.109 for methanol and formaldehyde EFC systems.

(iii) The cyclonic separator is optional.

(4) Losses of methanol due to condensation of water in the duct connecting the vehicle tail pipe to the dilution tunnel must be eliminated. This may be accomplished by:

(i) The use of a duct of unrestricted length maintained at a temperature above the maximum dew point of the exhaust, but below 250 °F (121 °C), through heating and cooling as required; or

(ii) The use of a short duct (up to 12 feet long) constructed of smooth wall pipe with a minimum of flexible sections maintained at a temperature above the maximum dew point of the exhaust, but below 250 °F (121 °C), prior to the test and during breaks in testing (insulation may remain in place and/or heating may occur during testing provided maximum temperature is not exceeded); or

(iii) Using smooth wall duct less than five feet long with no required heating. A maximum of two short flexible connectors are allowed under this option; or

(iv) Omitting the duct and performing the exhaust gas dilution function at the vehicle tailpipe exit.

(5) The vehicle exhaust shall be directed downstream at the point where it is introduced into the dilution tunnel.

(6) The dilution air shall be between 68 °F (20 °C) and 86 °F (30 °C) during the test (unless the requirements of § 86.109–94(b)(4) are also met).

(7) The dilution tunnel shall be:

(i) Sized to permit development of turbulent flow (Reynold's No. >>4000) and complete mixing of the exhaust and dilution air between the mixing orifice and the particulate sample probe. It is recommended that uniform mixing be demonstrated by the user.

(ii) At least 8.0 inches (20.3 cm) in diameter.

(iii) Constructed of electrically conductive material which does not react with the exhaust components.

(iv) Grounded.

(8) The temperature of the diluted exhaust stream inside of the dilution tunnel shall be sufficient to prevent water condensation. However, the sample zone dilute exhaust temperature shall not exceed 125 °F (52 °C) at any time during the test.

(9) The particulate sample probe shall be:

(i) Installed facing upstream at a point where the dilution air and exhaust are well mixed (i.e., near the tunnel centerline, approximately 10 tunnel diameters downstream from the point where the exhaust enters the dilution tunnel).

(ii) Sufficiently distant (radially) from the THC probe so as to be free from the influence of any wakes or eddies produced by the THC probe.

(iii) 0.5 inch (1.27 cm) minimum inside diameter.

(iv) The distance from the sampling tip to the filter holder shall be at least five probe diameters (for filters located inside the tunnel), but not more than 40.0 inches (102 cm) for filters located outside of the dilution tunnel.

(v) Free from sharp bends.

(vi) Configured so that a clean particulate filter (including back up filter) can be selected simultaneously with the selection of an empty gaseous emissions bag.

(10) The flow rate through the particulate probe shall be maintained to a constant value within ±5 percent of the set flow rate.

(11) The particulate sample pump shall be located sufficiently distant from the dilution tunnel so that the inlet gas temperature is maintained at a constant temperature (±5.0 °F (2.8 °C)).

(12) The gas meters or flow instrumentation shall be located sufficiently distant from the tunnel so that the inlet gas temperature remains constant (±5.0 °F (2.8 °C)).

(13) The hydrocarbon probe shall be:

(i) Installed facing upstream at a point where the dilution air and exhaust are well mixed (i.e., approximately ten tunnel diameters downstream from the point where the exhaust enters the dilution tunnel).

(ii) Sufficiently distant (radially) from the particulate probe so as to be free from the influence of any wakes of eddies produced by the particulate probe.

(iii) Heated and insulated over the entire length to maintain a wall temperature more than 5 °F (3 °C) above the maximum dew point of the sample, but below 250 °F (121 °C).

(iv) 0.19 in. (0.48 cm) minimum inside diameter.

(14) It is intended that the THC probe be free from cold spots (i.e., free from cold spots where the probe wall temperature is less than 5 °F (3 °C) above the maximum dew point of the sample.) This will be determined by a temperature sensor located on a section of the probe wall outside of the dilution tunnel. The temperature sensor shall be insulated from any heating elements on the probe. The sensor shall have an accuracy and precision of ±2 °F (1.1 °C).

(15) The dilute exhaust gas flowing in the hydrocarbon sample system shall be:

(i) At 235 °F ±15 °F (113 °C ±8 °C) immediately before the heated filter. This will be determined by a temperature sensor located immediately upstream of the filter. The sensor shall have an accuracy and precision of ±2 °F (1.1 °C).

(ii) At 235° ±15 °F (113 °C ±8 °C) immediately before the HFID. This will be determined by a temperature sensor located at the exit of the heated sample line. The sensor shall have an accuracy and precision of ±2 °F (1.1 °C).

(16) It is intended that the dilute exhaust gas flowing in the hydrocarbon sample system between 220 °F and 250 °F (105 °C and 121 °C).

(17) For methanol-fueled vehicles, bag sampling procedures for the measurement of hydrocarbons as described in § 86.109 may be employed.

(d) [Reserved]. For guidance see § 86.110–90.

[56 FR 25767, June 5, 1991, as amended at 59 FR 48505, Sept. 21, 1994; 60 FR 34342, June 30, 1995]

§ 86.111–90 Exhaust gas analytical system.

(a) *Schematic drawings*. Figure B90–7 is a schematic drawing of the exhaust gas analytical system for analysis of hydrocarbons (HC) (hydrocarbons plus methanol in the case of methanol-fueled vehicles), carbon monoxide (CO), carbon dioxide (CO_2), and oxides of nitrogen (NO_X). The schematic diagram of the hydrocarbon analysis train for diesel vehicles (and for hydrocarbons plus methanol for methanol-fueled diesel vehicles if continuous HFID analysis is employed) is shown as part of Figure B90–5 (or Figure B90–6). Since various configurations can produce accurate results, exact conformance with either drawing is not required. Additional components such as instruments, valves, solenoids, pumps and switches may be used to provide additional information and coordinate the functions of the component systems.

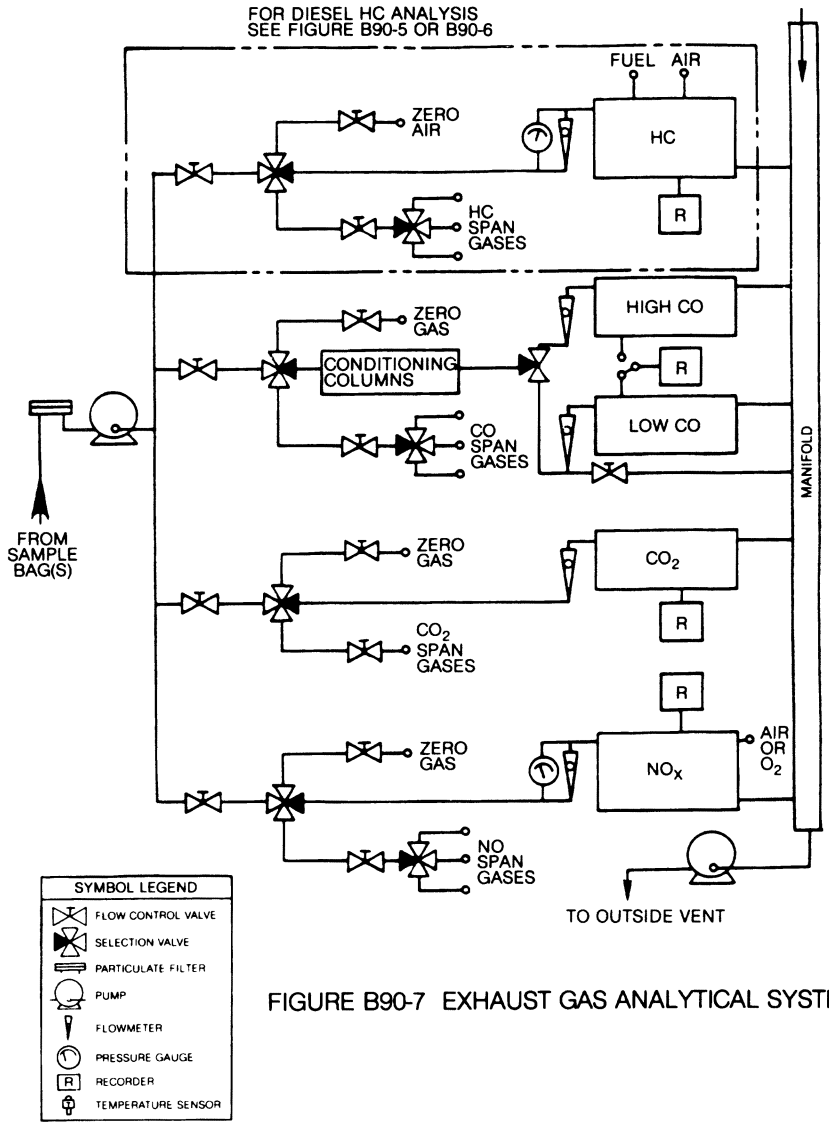

FIGURE B90-7 EXHAUST GAS ANALYTICAL SYSTEM

(b) *Major component description.* The exhaust gas analytical system for HC, CO, CO_2, and NO_X, Figure B90–7, consists of a flame ionization detector (FID) (heated, 235°±15 °F (113°±8 °C) for methanol-fueled vehicles) for the determination of hydrocarbons, non-dispersive infrared analyzers (NDIR) for the determination of carbon monoxide and carbon dioxide and a chemiluminescence analyzer (CL) for the determination of oxides of nitrogen. A heated flame ionization detector (HFID) is used for the continuous determination of hydrocarbons from petroleum-fueled diesel vehicles (may also be used with methanol-fueled diesel vehicles), Figure B90–5 (or B90–6).

The analytical system for methanol consists of a gas chromatograph (GC) equipped with a flame ionization detector. The analysis for formaldehyde is performed using high pressure liquid chromatography (HPLC) of 2,4-dinitrophenylhydrazine (DNPH) derivatives using ultraviolet (UV) detection. The exhaust gas analytical system shall conform to the following requirements:

(1) The CL requires that the nitrogen dioxide present in the sample be converted to nitric oxide before analysis. Other types of analyzers may be used if shown to yield equivalent results and if approved in advance by the Administrator.

(2) The carbon monoxide (CO) NDIR analyzer may require a sample conditioning column containing $CaSO_4$, or indicating silica gel to remove water vapor and containing ascarite to remove carbon dioxide from the CO analysis stream.

(i) If CO instruments which are essentially free of CO_2 and water vapor interference are used, the use of the conditioning column may be deleted, see §§ 86.122 and 86.144.

(ii) A CO instrument will be considered to be essentially free of CO_2 and water vapor interference if its response to a mixture of 3 percent CO_2 in N_2 which has been bubbled through water at room temperature produces an equivalent CO response, as measured on the most sensitive CO range, which is less than 1 percent of full scale CO concentration on ranges above 300 ppm full scale or less than 3 ppm on ranges below 300 ppm full scale, see § 86.122.

(3) For petroleum-fueled diesel vehicles (and if selected, for methanol-fueled diesel vehicles) a continuous hydrocarbon sample shall be measured using a heated analyzer train as shown in Figure B90–5 (or B90–6). The train shall include a heated probe, a heated continuous sampling line, a heated particulate filter and a heated hydrocarbon instrument (HFID) complete with heated pump, filter and flow control system.

(i) The response time of this instrument shall be less than 1.5 seconds for 90 percent of full scale response.

(ii) The continuous HC sample system may use an ''overflow'' zero and span system; see § 86.140–82(b)(4). In this type of system (figures B82–3A and B82–4A), zero or span gas is introduced into the heated sample line at a flow rate that exceeds the sample flow rate to the HFID. The excess gas overflows the sample probe into the dilution tunnel. This method assures that the reference gas enters HFID in the same concentration as the injected reference gas and at the same rate as the sample exhaust gas. In addition to zero and span checks, it may also be used to calibrate the HC analyzer per § 86.121–82(b). The overflow gas flow rate into the sample line shall be greater than 125 percent of the HFID flow rate with the CVS blower operating. A lower flow rate may be used if it has been experimentally shown to produce equivalent results and current dccumentation is maintained. The overflow gases shall enter the heated sample line as close as practicable to the outside surface of the dilution tunnel.

(iii) No other analyzers may draw a sample from the continuous HC sample probe, line or system, unless a common sample pump is used of all analyzers and the single sample line system design reflects good engineering practice.

(iv) Sample transport time from sampling point to inlet of instrument shall be less than 4 seconds.

(v) For petroleum-fueled diesel vehicles, the sample line and filter shall be heated to maintain a sample gas temperature of 375°±10 °F (191°±6 °C) before the filter and before the HFID.

(vi) For methanol-fueled diesel vehicles, the sample line and filter shall be heated to maintain a sample gas temperature of 235°±15 °F (113°±8 °C) before the filter and before the HFID.

(c) *Other analyzers and equipment.* Other types of analyzers and equipment may be used if shown to yield equivalent results and if approved in advance by the Administrator.

[54 FR 14512, Apr. 11, 1989]

§ 86.111–94 Exhaust gas analytical system.

Section 86.111–94 includes text that specifies requirements that differ from § 86.111–90. Where a paragraph in § 86.111–90 is identical and applicable to § 86.111–94, this may be indicated by specifying the corresponding paragraph and the statement ''[Reserved]. For

guidance see §86.111–90.'' Where a corresponding paragraph of §86.111–90 is not applicable, this is indicated by the statement ''[Reserved].''

(a) *Schematic drawings*. Figure B94–7 is a schematic drawing of the exhaust gas analytical system for samples from bag sampling systems for analysis of total hydrocarbon (THC) (hydrocarbon plus methanol in the case of methanol-fueled vehicles), methane (CH_4) (for vehicles subject to the NMHC and NMHCE standards), carbon monoxide (CO), carbon dioxide (CO_2), and oxides of nitrogen (NO_X). The schematic diagram of the continuous THC analysis train (and for THC plus methanol for methanol-fueled diesel-cycle vehicles) is shown as part of Figure B94–5 (or Figure B94–6). Since various configurations can produce accurate results, exact conformance with either drawing is not required. Additional components such as instruments, valves, solenoids, pumps, and switches may be used to provide additional information and coordinate the functions of the component systems.

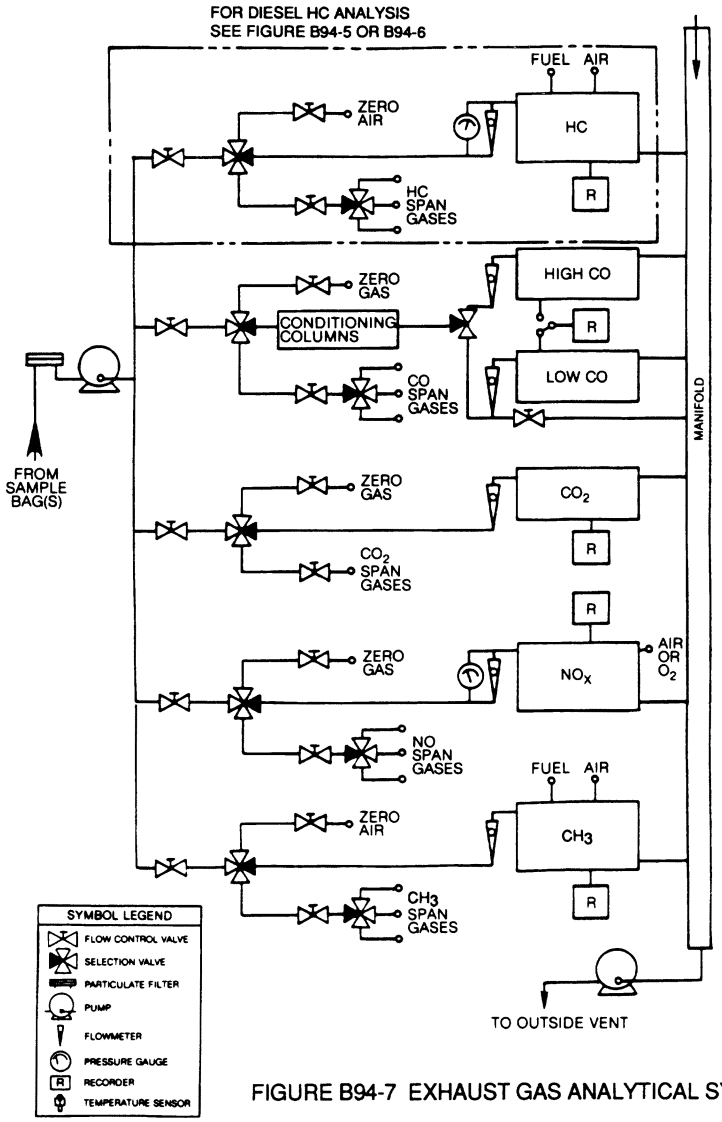

FIGURE B94-7 EXHAUST GAS ANALYTICAL SYSTEM

(b) *Major component description.* The exhaust gas analytical system, Figure B94–7, consists of a flame ionization detector (FID) (heated, 235 °±15 °F (113 °±8 °C) for methanol-fueled vehicles) for the determination of THC, a methane analyzer (consisting of a gas chromatograph combined with a FID) for the determination of CH_4 (for vehicles subject to the NMHC and NMHCE standards, where applicable), non-dispersive infrared analyzers (NDIR) for the determination of CO and CO_2 and a chemiluminescence analyzer (CL) for the determination of NO_X. A heated flame ionization detector (HFID) is used for the continuous determination of THC from petroleum-fueled diesel-

cycle vehicles (may also be used with methanol-fueled diesel-cycle vehicles), Figure B94–5 (or B94–6). The analytical system for methanol consists of a gas chromatograph (GC) equipped with a flame ionization detector. The analysis for formaldehyde is performed using high pressure liquid chromatography (HPLC) of 2,4-dinitrophenylhydrazine (DNPH) derivatives using ultraviolet (UV) detection. The exhaust gas analytical system shall conform to the following requirements:

(1) The CL requires that the nitrogen dioxide present in the sample be converted to nitric oxide before analysis. Other types of analyzers may be used if shown to yield equivalent results and if approved in advance by the Administrator.

(2) The carbon monoxide (CO) NDIR analyzer may require a sample conditioning column containing $CaSO_4$, or indicating silica gel to remove water vapor, and containing ascarite to remove carbon dioxide from the CO analysis stream.

(i) If CO instruments which are essentially free of CO_2 and water vapor interference are used, the use of the conditioning column may be deleted, see §§ 86.122 and 86.144.

(ii) A CO instrument will be considered to be essentially free of CO_2 and water vapor interference if its response to a mixture of 3 percent CO_2 in N_2 which has been bubbled through water at room temperature produces an equivalent CO response, as measured on the most sensitive CO range, which is less than 1 percent of full scale CO concentration on ranges above 300 ppm full scale or less than 3 ppm on ranges below 300 ppm full scale, see § 86.122.

(3) For petroleum-fueled diesel vehicles (and if selected, for methanol-fueled, natural gas-fueled and liquefied petroleum gas-fueled diesel vehicles) a continuous hydrocarbon sample shall be measured using a heated analyzer train as shown in Figure B90–5 (or B90–6). The train shall include a heated probe, a heated continuous sampling line, a heated particulate filter and a heated hydrocarbon instrument (HFID) complete with heated pump, filter and flow control system.

(i) The response time of this instrument shall be less than 1.5 seconds for 90 percent of full scale response.

(ii) The continuous THC sample system may use an ''overflow'' zero and span system; see § 86.140–82(b)(4). In this type of system (figures B82–3A and B82–4A), zero or span gas is introduced into the heated sample line at a flow rate that exceeds the sample flow rate to the HFID. The excess gas overflows the sample probe into the dilution tunnel. This method assures that the reference gas enters HFID in the same concentration as the injected reference gas and at the same rate as the sample exhaust gas. In addition to zero and span checks, it may also be used to calibrate the THC analyzer per § 86.121–82(b). The overflow gas flow rate into the sample line shall be greater than 125 percent of the HFID flow rate with the CVS blower operating. A lower flow rate may be used if it has been experimentally shown to produce equivalent results and current documentation is maintained. The overflow gases shall enter the heated sample line as close as practicable to the outside surface of the dilution tunnel.

(iii) No other analyzers may draw a sample from the continuous THC sample probe, line, or system, unless a common sample pump is used of all analyzers and the single sample line system design reflects good engineering practice.

(iv) Sample transport time from sampling point to inlet of instrument shall be less than 4 seconds.

(v) For petroleum-fueled, natural gas-fueled and liquefied petroleum gas-fueled diesel vehicles, the sample line and filter shall be heated to maintain a sample gas temperature of 375° ±10 °F (191° ±6 °C) before the filter and before the HFID.

(vi) For methanol-fueled diesel-cycle vehicles, the sample line and filter shall be heated to maintain a sample gas temperature of 235 °±15 °F (113 °±8 °C) before the filter and before the HFID.

(vii) Using a methane analyzer consisting of a gas chromatograph combined with a FID, the measurement of methane shall be done in accordance

with the Society of Automotive Engineers, Inc. (SAE) Recommended Practice J1151, ''Methane Measurement Using Gas Chromatography,'' December 1991, 1994 SAE Handbook—SAE International Cooperative Engineering Program, Volume 1: Materials, Fuels, Emissions, and Noise; Section 13 and page 170 (13.170), which is incorporated by reference.

(A) This incorporation by reference was approved by the Director of the Federal Register in accordance with 5 U.S.C. 552(a) and 1 CFR part 51.

(B) Copies may be inspected at U.S. EPA, OAR, 401 M St., SW., Washington, DC 20460, or at the National Archives and Records Administration (NARA). For information on the availability of this material at NARA, call 202–741–6030, or go to: *http://www.archives.gov/federal_register/code_of_federal_regulations/ibr_locations.html*. Copies of this material may be obtained from Society of Automotive Engineers International, 400 Commonwealth Drive, Warrendale, PA 15096–001.

(c) *Other analyzers and equipment*. Other types of analyzers and equipment may be used if shown to yield equivalent or superior results and if approved in advance by the Administrator.

[56 FR 25771, June 5, 1991, as amended at 58 FR 33209, June 16, 1993; 59 FR 48505, Sept. 21, 1994; 59 FR 50073, Sept. 30, 1994]

§ 86.112–91 Weighing chamber (or room) and microgram balance specifications.

(a) *Ambient conditions*—(1) *Temperature*. The temperature of the chamber in which the particulate filters are conditioned and weighed shall be maintained to within ±10 °F (6 °C) of a set point between 68 °F (20 °C) and 86 °F (30 °C) during all filter conditioning and filter weighing. A continuous recording of the temperature is required.

(2) *Humidity*. The relative humidity of the chamber in which the particulate filters are conditioned and weighed shall be maintained to within ±10 percent of a set point between 30 and 70 percent during all filter conditioning and filter weighing. A continuous recording of the temperature is required.

(3) The environment shall be free from any ambient contaminants (such as dust) that would settle on the particulate filters during their stabilization.

(4) It is required that two unused reference filters remain in the weighing room at all times in covered (to reduce dust contamination) but unsealed (to permit humidity exchange) petri dishes. These reference filters shall be placed in the same general area as the sample filters. These reference filters shall be weighed within 4 hours of, but preferably just prior to, the pre- and post-test sample filter weighings.

(5) If the weight of either of the reference filters changes between pre- and post-test sample filter weighings by more than ±2.0 percent of the test average primary filter loading (recommended minimum of 0.5 milligrams) or ±0.010 milligrams, whichever is greater, then the post-test sample filter weights are invalid. However, the post-test weighing procedure can be repeated to obtain valid weights within the time limits as specified in § 86.139.

(6) The reference filters shall be changed at least once per month, but never between pre- and post-test weighings of a given sample filter. The reference filters shall be the same size and material as the sample filters.

(b) *Microgram balance specifications*. The microgram balance used to determine the weights of all filters shall have a precision (standard deviation) and a readability of one microgram.

(c) *Other procedures and equipment*. Other procedures and equipment may be used if shown to yield equivalent or superior results and if approved in advance by the Administrator.

[56 FR 25773, June 5, 1991]

§ 86.113–04 Fuel specifications.

This section includes text that specifies requirements that differ from § 86.113–94. Where a paragraph in § 86.113–94 is identical and applicable to this section, this will be indicated by specifying the corresponding paragraph and the statement ''[Reserved]. For guidance see § 86.113–94.''.

(a) *Gasoline fuel*. (1) Gasoline having the following specifications will be used by the Administrator in exhaust

and evaporative emission testing of petroleum-fueled Otto-cycle vehicles, except that the Administrator will not use gasoline having a sulfur specification higher than 0.0045 weight percent. Gasoline having the following specification or substantially equivalent specifications approved by the Administrator, must be used by the manufacturer in exhaust and evaporative testing except that octane specifications do not apply:

Item	ASTM test method No.	Value
Octane, Research, Min.	D 2699	93
Sensitivity, Min.		7.5
Lead (organic), max. g/U.S. gal. (g/liter)	D 3237	0.050 (0.013)
Distillation Range:	D 86.	
IBP[1]:deg. F (deg. C)		75–95 (23.9–35)
10 pct. point: deg.F (deg.C)		120–135 (48.9–57.2)
50 pct. point: deg.F. (deg.C)		200–230 (93.3–110)
90 pct. point: deg.F (deg.C)		300–325 (148.9–162.8)
EP, max: deg.F (deg.C)		415 (212.8)
Sulfur, weight pct.	D 1266	0.0015–0.008
Phosphorous, max. g/U.S. gal (g/liter)	D 3231	0.005 (0.0013)
RVP[2,3]	D 3231	8.7–9.2 (60.0–63.4)
Hydrocarbon composition:	D 1319.	
Olefins, max. pct.		10
Aromatics, max, pct.		35
Saturates		Remainder

[1] For testing at altitudes above 1,219 m (4000 feet), the specified range is 75–105 deg. F (23.9–40.6 deg. C).
[2] For testing which is unrelated to evaporative emission control, the specified range is 8.0-9.2 psi (55.2–63.4 kPa).
[3] For testing at altitudes above 1,219 m (4000 feet), the specified range is 7.6–8.0 psi (52-55 kPa).

(2) For light-duty vehicles, light-duty trucks and medium-duty passenger vehicles certified for 50 state sale, and for Tier 2 and interim non-Tier 2 vehicles whose certification is carried over from the NLEV program or carried across from the California LEV I program, ''California Phase 2'' gasoline having the specifications listed in the table in this section may be used in exhaust emission testing as an option to the specifications in paragraph (a)(1) of this section. If a manufacturer elects to utilize this option, the manufacturer must conduct exhaust emission testing with gasoline having the specifications listed in the table in this paragraph (a)(2) and in the case of interim non-Tier 2 LDV/Ts and interim non-Tier 2 MDPVs whose certification is carried over from the NLEV program or carried across from California LEV I program certification the Administrator must also conduct exhaust emission testing with gasoline having the specifications listed in the table in this paragraph (a)(2). However, the Administrator may use or require the use of test fuel meeting the specifications in paragraph (a)(1) of this section for certification confirmatory testing, selective enforcement auditing and in-use testing for all other vehicles. All fuel property test methods for this fuel are contained in Chapter 4 of the California Regulatory Requirements Applicable to the National Low Emission Vehicle Program (October, 1996). These requirements are incorporated by reference (see § 86.1). The table follows:

Fuel property	Limit
Octane, (R+M)/2 (min)	91
Sensitivity (min)	7.5
Lead, g/gal (max) (No lead added)	0–0.01
Distillation range, °F.	
10 pct. point,	130–150
50 pct. point,	200–210
90 pct. point,	290–300
EP, maximum	390
Residue, vol% (max)	2.0

Fuel property	Limit
Sulfur, ppm by wt.	15–40, except that administrator may use and approve for use, lower ranges where such ranges are consistent with current California requirements.
Phosphorous, g/gal (max)	0.005
RVP, psi	6.7–7.0
Olefins, vol%	4.0–6.0
Total aromatic hydrocarbons (vol%)	22–25
Benzene, vol%	0.8–1.0
Multi-substituted alkyl Aromatic hydrocarbons, vol%	12–14
MTBE, vol %	10.8–11.2
Additives:	See chapter 4 of the California Regulatory Requirements Applicable to the National Low Emission Vehicle Program (October, 1996). These procedures are incorporated by reference (see § 86.1).
Copper corrosion	No. 1.
Gum, washed, mg/100 ml (max)	3.0
Oxidation stability, minutes (min)	1000
Specific gravity	No limit; report to purchaser required.
Heat of combustion	No limit; report to purchaser required.
Carbon, wt%	No limit; report to purchaser required.
Hydrogen, wt%	No limit; report to purchaser required.

(3)(i) Unless otherwise approved by the Administrator, unleaded gasoline representative of commercial gasoline that will be generally available through retail outlets must be used in service accumulation. For model years 2004 and later, and unless otherwise approved by the Administrator, this gasoline must have a minimum sulfur content of 15 ppm. Unless otherwise approved by the Administrator, where the vehicle is to be used for evaporative emission durability demonstration, such fuel must contain ethanol as required by § 86.1824–01(a)(2)(iii). Leaded gasoline must not be used in service accumulation.

(ii) Unless otherwise approved by the Administrator, the octane rating of the gasoline used must be no higher than 1.0 Retail octane number above the lowest octane rating that meets the fuel grade the manufacturer will recommend to the ultimate purchaser for the relevant production vehicles. If the manufacturer recommends a Retail octane number rather than a fuel grade, then the octane rating of the service accumulation gasoline can be no higher than 1.0 Retail octane number above the recommended Retail octane number. The service accumulation gasoline must also have a minimum sensitivity of 7.5 octane numbers, where sensitivity is defined as the Research octane number minus the Motor octane number.

(iii) The Reid Vapor Pressure of the gasoline used must be characteristic of the motor fuel used during the season in which the service accumulation takes place.

(4) The specification range of the gasoline to be used under this paragraph (a) must be reported in accordance with §§ 86.094–21(b)(3) and 86.1844–01.

(b)–(g) [Reserved]. For guidance see § 86.113–94.

[65 FR 6848, Feb. 10, 2000]

§ 86.113–07 Fuel specifications.

Section 86.113–07 includes text that specifies requirements that differ from § 86.113–94 or § 86.113–04. Where a paragraph in § 86.113–94 or § 86.113–04 is identical and applicable to § 86.113–07, this may be indicated by specifying the corresponding paragraph and the statement ''[Reserved]. For guidance see § 86.113–94.'' or ''[Reserved]. For guidance see § 86.113–04.''.

(a) [Reserved]. For guidance see § 86.113–04.

(b)(1) [Reserved]. For guidance see § 86.113–94.

(b)(2) Petroleum fuel for diesel vehicles meeting the following specifications, or substantially equivalent specifications approved by the Administrator, must be used in exhaust emissions testing. The grade of petroleum diesel fuel recommended by the engine manufacturer, commercially designated as ''Type 2–D'' grade diesel, must be used:

Item		ASTM test method No.	Type 2–D
(i) Cetane Number		D613	40–50
(ii) Cetane Index		D976	40–50
(iii) Distillation range:			
(A) IBP	°F	D86	340–400
	(°C)		(171.1–204.4)
(B) 10 pct. point	°F	D86	400–460
	(°C)		(204.4–237.8)
(C) 50 pct. point	°F	D86	470–540
	(°C)		(243.3–282.2)
(D) 90 pct. point	°F	D86	560–630
	(°C)		(293.3–332.2)
(E) EP	°F	D86	610–690
	(°C)		(321.1–365.6)
(iv) Gravity	°API	D287	32–37
(v) Total sulfur	ppm	D2622	7–15
(vi) Hydrocarbon composition:			
(A) Aromatics, minimum (Remainder shall be paraffins, naphthenes, and olefins).	pct.	D5186	27
(vii) Flashpoint, min.	°F	D93	130
	(°C)		(54.4)
(viii) Viscosity	centistokes	D445	2.0–3.2

(3) Petroleum fuel for diesel vehicles meeting the following specifications, or substantially equivalent specifications approved by the Administrator, shall be used in service accumulation. The grade of petroleum diesel fuel recommended by the engine manufacturer, commercially designated as ''Type 2-D'' grade diesel fuel, shall be used: (b)(4) through (g) [Reserved]. For guidance see § 86.113–94.

Item		ASTM test method No.	Type 2–D
(i) Cetane Number		D613	38–58
(ii) Cetane Index		D976	min. 40
(iii) Distillation range:			
90 pct. point	°F	D86	540–630
(iv) Gravity	°API	D287	30–39
(v) Total sulfur	ppm	D2622	7–15
(vi) Flashpoint, min.	°F	D93	130
	(°C)		(54.4)
(vii) Viscosity	centistokes	D445	1.5–4.5

(h)(1) For model year 2004 through 2006 Tier 2 diesel-fueled vehicles that incorporate sulfur-sensitive technologies, the manufacturer may test the vehicle using a test fuel meeting the specifications listed in paragraphs (b)(2) and (b)(3) of this section, provided the manufacturer clearly recommends to the ultimate purchaser in the owner's manual that the vehicle should use fuel with no higher than 15 ppm sulfur.

(2) For model year 2004 through 2006 Tier 2 diesel-fueled vehicles that incorporate sulfur-sensitive technologies and that are certified for 50-state sale (*i.e.*, certified to California and EPA standards), the manufacturer may test the vehicle using a test fuel whose qualities, on a specification by specification basis, meet the requirements of either the specifications listed in paragraph (b)(2) of this section or the California test fuel specifications, provided the manufacturer clearly recommends to the ultimate purchaser in the owner's manual that the vehicle should use fuel with no higher than 15 ppm sulfur.

(3) Where a manufacturer uses a test fuel under paragraph (h)(1) or (h)(2) of this section, EPA shall use the same fuel for its compliance testing.

[66 FR 5167, Jan. 18, 2001]

§ 86.113–91 Fuel specifications.

(a) *Otto-cycle test fuel.* (1) Gasoline having the following specifications will

be used by the Administrator in exhaust and evaporative emission testing of petroleum-fueled Otto-cycle vehicles. Gasoline having the following specification or substantially equivalent specifications approved by the Administrator, shall be used by the manufacturer in exhaust and evaporative testing except that octane specifications do not apply.

Item		ASTM test method No.	Value
Octane, research.	min	D2699	93
Sensitivity	min		7.5
Lead (organic)	g/U.S. gal. (g/liter).	D3237	[1] 0.050 [1] (0.013)
Distillation Range:			
IBP [2]	°F	D86	75–95
	(°C)		(23.9–35)
10 pct. point	°F	D86	120–135
	(°C)		(48.9–57.2)
50 pct. point	°F	D86	200–230
	(°C)		(93.3–110)
90 pct. point	°F	D86	300–325
	(°C)		(148.9–162.8)
EP, (max.)	°F	D86	415
	(°C)		(212.8)
Sulfur, weight pct.	max.	D1266	0.10
Phosphorus, max.	g/U.S. gal. (g/liter).	D3231	0.005 (0.0013)
RVP [3,4]	psi (kPa)	D323	8.7–9.2 (60.0–63.4)
Hydrocarbon composition:			
Olefins,	max. pct.	D1319	10
Aromatics	max. pct.	D1319	35
Saturates		D1319	([5])

[1] Maximum.
[2] For testing at altitudes above 1,219 m (4,000 ft) the specified range is 75°–105 °F (23.9°–40.6 °C).
[3] For testing which is unrelated to evaporative emission control, the specified range is 8.0–9.2 psi (55.2–63.4 kPa).
[4] For testing at altitudes above 1,219 m (4,000 ft) the specified range is 7.9–9.2 psi (54.5–63.4 kPa).
[5] Remainder.

(2) Unleaded gasoline representative of commercial gasoline which will be generally available through retail outlets shall be used in service accumulation for petroleum-fueled Otto-cycle vehicles. Leaded gasoline will not be used in service accumulation.

(i) The octane rating of the gasoline used shall be no higher than 1.0 Research octane number above the minimum recommended by the manufacturer and have a minimum sensitivity of 7.5 octane numbers, where sensitivity is defined as the Research octane number minus the Motor octane number.

(ii) The Reid Vapor Pressure of the gasoline used shall be characteristic of the motor fuel used during the season in which the service accumulation takes place.

(3) Methanol fuel used for exhaust and evaporative emission testing and in service accumulation of methanol-fueled Otto-cycle vehicles shall be representative of commercially available methanol fuel and shall consist of at least 50 percent methanol by volume.

(i) Manufacturers shall recommend the methanol fuel to be used for testing and service accumulation in accordance with paragraph (a)(3) of this section.

(ii) The Administrator shall determine the methanol fuel to be used for testing and service accumulation.

(4) Other methanol fuels may be used for testing and service accumulation provided:

(i) They are commercially available, and

(ii) Information, acceptable to the Administrator, is provided to show that only the designated fuel would be used in customer service, and

(iii) Use of a fuel listed under paragraph (a)(3) of this section would have a detrimental effect on emissions or durability, and

(iv) Written approval from the Administrator of the fuel specifications must be provided prior to the start of testing.

(5) The specification range of the fuels to be used under paragraphs (a)(2), (a)(3), and (a)(4) of this section shall be reported in accordance with § 86.090–21(b)(3).

(b) *Diesel test fuel.* (1) The petroleum fuels employed for testing diesel vehicles shall be clean and bright, with pour and cloud points adequate for operability. The petroleum fuel may contain nonmetallic additives as follows: cetane improver, metal deactivator, antioxidant, dehazer, antirust, pour depressant, dye, dispersant and biocide. Except for the sulfur content of ''Type 2–D'' fuel, fuels specified for emissions testing are intended to be representative of commercially available in-use fuels.

(2) Petroleum fuel for diesel vehicles meeting the following specifications,

or substantially equivalent specifications approved by the Administrator, shall be used in exhaust emissions testing. The grade of petroleum fuel recommended by the engine manufacturer, commercially designated as ''Type 2–D'' grade diesel, shall be used.

Item		ASTM test method No.	Type 2–D
Cetane Number		D613	42–50
Distillation range:			
IBP	°F	D86	340–400
	(°C)		(171.1–204.4)
10 pct. point	°F	D86	400–460
	(°C)		(204.4–237.8)
50 pct. point	°F	D86	470–540
	(°C)		(243.3–282.2)
90 pct. point	°F	D86	560–630
	(°C)		(293.3–332.2)
EP	°F	D86	610–690
	(°C)		(321.1–365.6)
Gravity	° API	D287	32–37
Total sulfur	pct.	D2622	0.08–0.12
Hydrocarbon composition:			
Aromatics, min	pct.	D1319	27
Paraffins, Naphthenes, Olefins.		D1319	(1)
Flashpoint, min	°F	D93	130
	(°C)		(54.4)
Viscosity, centistokes.		D445	2.0–3.2

[1] Remainder.

(3) Petroleum fuel for diesel vehicles meeting the following specifications, or substantially equivalent specifications approved by the Administrator, shall be used in service accumulation. The grade of petroleum diesel fuel recommended by the engine manufacturer, commercially designated as ''Type 2–D'' grade diesel fuel, shall be used.

Item		ASTM test method No.	Type 2–D
Cetane Number		D613	38–58
Distillation range:			
90 pct. point	°F	D86	540–650
	(°C)		(282.2–343.3)
Gravity	°API	D287	30–39
Total sulfur	pct	D2622	0.08–0.12
Flashpoint, min	°F	D93	130
	(°C)		(54.4)
Viscosity	centistokes	D455	1.5–4.5

(4) Methanol fuel used for exhaust and evaporative emission testing and in service accumulation of methanol-fueled diesel vehicles shall be representative of commercially available methanol fuel and shall consist of at least 50 percent methanol by volume.

(i) Manufacturers shall recommend the methanol fuel to be used for testing and service accumulation in accordance with paragraph (b)(4) of this section.

(ii) The Administrator shall determine the methanol fuel to be used for testing and service accumulation.

(5) Other fuels may be used for testing and service accumulation provided:

(i) They are commercially available, and

(ii) Information, acceptable to the Administrator, is provided to show that only the designated fuel would be used in customer service, and

(iii) Use of a fuel listed under paragraphs (b)(2) and (b)(3) or (b)(4) of this section would have a detrimental effect on emissions or durability, and

(iv) Written approval from the Administrator of the fuel specifications must be provided prior to the start of testing.

(6) The specification range of the fuels to be used under paragraphs (b)(2), (b)(3), (b)(4), and (b)(5) of this section shall be reported in accordance with § 86.090–21(b)(3).

(c) Fuels not meeting the specifications set forth in this section may be used only with the advance approval of the Administrator.

(d) *Mixtures of petroleum and methanol fuels for flexible fuel vehicles.* (1) Mixtures of petroleum and methanol fuels used for exhaust and evaporative emission testing and service accumulation for flexible fuel vehicles shall be within the range of fuel mixtures for which the vehicle was designed.

(2) Manufacturer testing and service accumulation may be performed using only those mixtures (mixtures may be different for exhaust testing, evaporative testing, and service accumulation expected to result in the highest emissions, provided:

(i) The fuels which constitute the mixture will be used in customer service, and

(ii) Information, acceptable to the Administrator, is provided by the manufacturer to show that the designated fuel mixtures would result in the highest emissions, and

(iii) Written approval from the Administrator of the fuel specifications must be provided prior to the start of testing.

(3) The specification range of the fuels to be used under paragraph (d)(1) of this section shall be reported in accordance with § 86.090–21(b)(3).

[55 FR 34144, Aug. 21, 1990, as amended at 57 FR 19538, May 7, 1992]

§ 86.113–94 Fuel specifications.

(a) *Gasoline fuel.* (1) Gasoline having the following specifications will be used by the Administrator in exhaust and evaporative emission testing of petroleum-fueled Otto-cycle vehicles. Gasoline having the following specification or substantially equivalent specifications approved by the Administrator, shall be used by the manufacturer in exhaust and evaporative testing except that octane specifications do not apply;

Item	ASTM test method No.	Value
Octane, Research, Min	D2699	93
Sensitivity, Min		7.5
Lead (organic):		
g/U.S. gal. (g/liter)	D3237	[1] 0.050 [1] (0.013)
Distillation Range:		
IBP:[2] °F (°C)	D86	75–95 (23.9–35)
10 pct. point: °F (°C)	D86	120–135 (48.9–57.2)
50 pct. point: °F (°C)	D86	200–230 (93.3–110)
90 pct. point: °F (°C)	D86	300–325 (148.9–162.8):
EP, max: °F (°C)	D86	415 (212.8)
Sulfur, weight pct. max	D1266	0.10
Phosphorus, max. g/U.S. gal. (g/liter).	D3231	0.005 (0.0013)
RVP,[3,4] psi (kPa)	D3231	8.7–9.2 (60.0–63.4)
Hydrocarbon composition:		
Olefins, max. pct	D1319	10
Aromatics, max. pct	D1319	35
Saturates	D1319	([5])

[1] Maximum.
[2] For testing at altitudes above 1,219 m (4,000 ft), the specified range is 75°–105 °F (23.9°–40.6 °C).
[3] For testing which is unrelated to evaporative emission control, the specified range is 8.0–9.2 psi (55.2–63.4 kPa).
[4] For testing at altitudes above 1,219 m (4,000 ft), the specified range is 7.6–8.0 psi (52–55 kPa).
[5] Remainder.

(2)(i) Unleaded gasoline representative of commercial gasoline which will be generally available through retail outlets shall be used in service accumulation. Leaded gasoline will not be used in service accumulation.

(ii) The octane rating of the gasoline used shall be no higher than 1.0 Research octane number above the minimum recommended by the manufacturer and have a minimum sensitivity of 7.5 octane numbers, where sensitivity is defined as the Research octane number minus the Motor octane number.

(iii) The Reid Vapor Pressure of the gasoline used shall be characteristic of the motor fuel used during the season in which the service accumulation takes place.

(3) The specification range of the gasoline to be used under this paragraph (a) shall be reported in accordance with § 86.094–21(b)(3) or § 86.1844–01 as applicable.

(b) *Petroleum diesel test fuel.* (1) The petroleum fuels employed for testing diesel vehicles shall be clean and bright, with pour and cloud points adequate for operability. The petroleum diesel fuel may contain nonmetallic additives as follows: Cetane improver, metal deactivator, antioxidant, dehazer, antirust, pour depressant, dye, dispersant and biocide. Fuels specified for emissions testing are intended to be representative of commercially available in-use fuels.

(2) Petroleum fuel for diesel vehicles meeting the following specifications, or substantially equivalent specifications approved by the Administrator, shall be used in exhaust emission testing. The grade of petroleum diesel fuel recommended by the engine manufacturer, commercially designated as ''Type 2–D'' grade diesel, shall be used:

Item		ASTM test method No.	Type 2–D
Cetane number		D 613	40–50
Cetane index		D 976	40–50
Distillation range:			
IBP	°F (°C)	D 86	340–400 (171.1–204.4)
10 pct. point	°F	D 86	400–460

Item		ASTM test method No.	Type 2–D
	(°C)		(204.4–237.8)
50 pct. point	°F	D 86	470–540
	(°C)		(243.3–282.2)
90 pct. point	°F	D 86	560–630
	(°C)		(293.3–332.2)
EP	°F	D 86	610–690
	(°C)		(321.1–365.6)
Gravity	°API	D 287	32–37
Total sulfur	pct.	D 2622	0.03–0.05
Hydrocarbon composition:			
Aromatics, minimum	pct.	D 1319	27
Paraffins, Naphthenes, Olefins		D 1319	[1]
Flashpoint, min.	°F	D 93	130
	(°C)		(54.4)
Viscosity	centistokes	D 445	2.0–3.2

[1] Remainder.

(3) Petroleum fuel for diesel vehicles meeting the following specifications, or substantially equivalent specifications approved by the Administrator, shall be used in service accumulation. The grade of petroleum diesel fuel recommended by the engine manufacturer, commercially designated as ''Type 2–D'' grade diesel fuel, shall be used:

Item		ASTM test method No.	Type 2–D
Cetane Number		D613	38–58
Cetane Index		D976	min. 40
Distillation range:			
90 pct. point	°F	D86	540–630
	(°C)		(282.2–343.3)
Gravity	°API	D287	30–39
Total sulfur	pct.	D2622	0.03–0.05
Flashpoint, min.	°F	D93	130
	(°C)		(54.4)
Viscosity	centistokes	D445	1.5–4.5

(4) Other petroleum distillate fuels may be used for testing and service accumulation provided:

(i) They are commercially available; and

(ii) Information, acceptable to the Administrator, is provided to show that only the designated fuel would be used in customer service; and

(iii) Use of a fuel listed under paragraphs (b)(2) and (b)(3) of this section would have a detrimental effect on emissions or durability; and

(iv) Written approval from the Administrator of the fuel specifications is provided prior to the start of testing.

(5) The specification range of the fuels to be used under paragraphs (b)(2), (b)(3) and (b)(4) of this section shall be reported in accordance with § 86.094–21(b)(3) or § 86.1844–01 as applicable.

(c) *Methanol fuel.* (1) Methanol fuel used for exhaust and evaporative emission testing and in service accumulation shall be representative of commercially available methanol fuel and shall consist of at least 50 percent methanol by volume.

(i) Manufacturers shall recommend the methanol fuel to be used for testing and service accumulation.

(ii) The Administrator shall determine the methanol fuel to be used for testing and service accumulation.

(2) Other methanol fuels may be used for testing and service accumulation provided:

(i) They are commercially available; and

(ii) Information, acceptable to the Administrator, is provided to show that only the designated fuel would be used in customer service; and

(iii) Use of a fuel listed under paragraph (c)(1) of this section would have a detrimental effect on emissions or durability; and

(iv) Written approval from the Administrator of the fuel specifications must be provided prior to the start of testing.

(3) The specification range of the fuels to be used under paragraphs (c)(1) and (c)(2) of this section shall be reported in accordance with § 86.094–21(b)(3) or § 86.1844–01 as applicable.

(d) *Mixtures of petroleum and methanol fuels for flexible fuel vehicles.* (1) Mixtures of petroleum and methanol fuels used for exhaust and evaporative emission testing and service accumulation for flexible fuel vehicles shall consist of the appropriate petroleum fuels listed in either paragraph (a) or paragraph (b) of this section and a methanol fuel representative of the fuel expected to be found in use, as specified in paragraph (c) of this section, and shall be within the range of fuel mixtures for which the vehicle was designed, as reported in § 86.94–21(j) or § 86.1844–01 as applicable. The Administrator may use any fuel or fuel mixture within this range for testing.

(2) The fuel mixtures used by the manufacturers shall be sufficient to demonstrate compliance over the full design range, and shall include:

(i) For emission testing:

(A) The petroleum fuel specified in paragraph (a) or (b) of this section;

(B) A methanol fuel representative of the methanol fuel expected to the found in use, as specified in paragraph (c) of this section;

(C) A combination of the fuels specified in paragraphs (d)(2)(i)(A) and (d)(2)(i)(B) of this section at a composition which represents the highest Reid Vapor Pressure of in-use mixtures. This mixture shall contain between 9–13 percent methanol by volume.

(ii) For service accumulation, the fuels specified in paragraphs (a) and (c) of this section or, for diesel FFVs, paragraphs (b) and (c) of this section shall be used alternately. The fuels shall be alternated at mileage intervals not to exceed 5,000 miles. The fuels shall be alternated such that the cumulative volumes of both the methanol fuel and the petroleum fuel used shall be at least 25 percent of the total fuel volume.

(iii) Or, other combinations for testing or service accumulation which demonstrate compliance with the standards over the entire design range of the vehicle, provided that written approval is obtained from the Administrator prior to the start of testing.

(3) The specification range of the fuels to be used under this paragraph shall be reported in accordance with § 86.094–21(b)(3) or § 86.1844–01 as applicable.

(e) *Natural gas fuel.* (1) Natural gas fuel having the following specifications will be used by the Administrator for exhaust and evaporative emission testing of natural gas-fueled vehicles:

Item		ASTM test method No.	Value
Methane	min. mole pct.	D1945	89.0
Ethane	max. mole pct.	D1945	4.5
C_3 and higher	max. mole pct.	D1945	2.3
C_6 and higher	max. mole pct.	D1945	0.2
Oxygen	max. mole pct.	D1945	0.6
Inert gases:			
Sum of CO_2 and N_2.	max. mole pct.	D1945	4.0
Odorant [1]			

[1] The natural gas at ambient conditions must have a distinctive odor potent enough for its presence to be detected down to a concentration in air of not over 1/5 (one-fifth) of the lower limit of flammability.

(2) Natural gas representative of commercially available natural gas fuel which will be generally available through retail outlets shall be used in service accumulation for natural gas-fueled vehicles.

(3) Other natural gas fuels may be used for testing and service accumulation provided:

(i) They are commercially available; and

(ii) Information acceptable to the Administrator is provided to show that only the designated fuel would be used in customer service; and

(iii) Written approval from the Administrator of the fuel specifications must be provided prior to the start of testing.

(4) The specification range of the fuels to be used under paragraphs (e)(1), (e)(2) and (e)(3) of this section shall be reported in accordance with § 86.094–21(b)(3) or § 86.1844–01 as applicable.

(f) *Liquefied petroleum gas fuel.* (1) Liquefied petroleum gas fuel used for exhaust and evaporative emission testing and in service accumulation shall be

commercially available liquefied petroleum gas fuel.

(i) Manufacturers shall recommend the liquefied petroleum gas fuel to be used for testing and service accumulation.

(ii) The Administrator shall determine the liquefied petroleum gas fuel to be used for testing and service accumulation.

(2) Other liquefied petroleum gas fuels may be used for testing and service accumulation provided:

(i) They are commercially available; and

(ii) Information, acceptable to the Administrator, is provided to show that only the designated fuel would be used in customer service; and

(iii) Written approval from the Administrator of the fuel specifications must be provided prior to the start of testing.

(3) The specification range of the fuel to be used under paragraphs (f)(1) and (f)(2) of this section shall be measured in accordance with ASTM D2163–61 (Incorporated by reference; see § 86.1) and reported in accordance with § 86.094–21(b)(3) or § 86.1844–01 as applicable.

(g) Fuels not meeting the specifications set forth in this section may be used only with the advance approval of the Administrator.

[59 FR 48506, Sept. 21, 1994, as amended at 60 FR 34342, June 30, 1995; 62 FR 47120, Sept. 5, 1997; 63 FR 24448, May 4, 1998; 64 FR 23921, May 4, 1999; 65 FR 8277, Feb. 18, 2000]

§ 86.114–79 Analytical gases.

(a) *Analyzer gases.* (1) Gases for the CO and CO_2 analyzers shall be single blends of CO and CO_2 respectively using nitrogen as the diluent.

(2) Gases for the hydrocarbon analyzer shall be single blends of propane using air as the diluent.

(3) Gases for NO_X analyzer shall be single blends of NO named as NO_X. with a maximum NO_2 concentration of 5 percent of the nominal value, using nitrogen as the diluent.

(4) Fuel for the evaporative emission enclosure FID shall be a blend of 40 ±2% hydrogen with the balance being helium. The mixture shall contain less than 1 ppm equivalent carbon response. 98 to 100 percent hydrogen fuel may be used with advance approval by the Administrator.

(5) The allowable zero gas (air or nitrogen) impurity concentrations shall not exceed 1 ppm equivalent carbon response, 1 ppm carbon monoxide, 0.04 percent (400 ppm) carbon dioxide and 0.1 ppm nitric oxide.

(6) ''Zero grade air'' includes artificial ''air'' consisting of a blend of nitrogen and oxygen with oxygen concentrations between 18 and 21 mole percent.

(7) The use of precision blending devices (gas dividers) to obtain the required calibration, as defined below, is acceptable, provided that the calibration curver they produce name a calibration gas within 2 percent of its certified concentration. This verification shall be performed at between 15 and 50 percent of the full scale concentration of the range and shall be included with each gas calibration incorporating a blending device. Alternative procedures to verify the validity of the analyzer calibration curves generated using a gas divider are acceptable provided the procedures are approved in advance by the Administrator.

(b) Calibration gases shall be traceable to within 1 percent of NBS gas standards, or other gas standards which have been approved by the Administrator.

(c) Span gases shall be accurate to within 2 percent of true concentration, where true concentration refers to NBS gas standards, or other gas standards which have been approved by the Administrator.

[42 FR 32954, June 28, 1977, as amended at 43 FR 52920, Nov. 14, 1978; 54 FR 2121, Jan. 19, 1989]

§ 86.114–94 Analytical gases.

(a) *Analyzer gases.* (1) Gases for the CO and CO_2 analyzers shall be single blends of CO and CO_2 respectively using nitrogen as the diluent.

(2) Gases for the THC analyzer shall be:

(i) Single blends of propane using air as the diluent; and

(ii) Optionally, for response factor determination, single blends of methanol using air as the diluent.

(3) Gases for the methane analyzer shall be single blends of methane using air as the diluent.

(4) Gases for the NO_X analyzer shall be single blends of NO named as NO_X. with a maximum NO_2 concentration of 5 percent of the nominal value, using nitrogen as the diluent.

(5) Fuel for FIDs and HFIDs and the methane analyzer shall be a blend of 40 ±2 percent hydrogen with the balance being helium. The mixture shall contain less than one ppm equivalent carbon response. 98 to 100 percent hydrogen fuel may be used with advance approval by the Administrator.

(6) The allowable zero gas (air or nitrogen) impurity concentrations shall not exceed 1 ppm equivalent carbon response, 1 ppm carbon monoxide, 0.04 percent (400 ppm) carbon dioxide, and 0.1 ppm nitric oxide.

(7) ''Zero grade air'' includes artificial ''air'' consisting of a blend of nitrogen and oxygen with oxygen concentrations between 18 and 21 mole percent.

(8) The use of precision blending devices (gas dividers) to obtain the required calibration, as defined below, is acceptable, provided that the calibration curves they produce name a calibration gas within 2 percent of its certified concentration. This verification shall be performed at between 15 and 50 percent of the full scale concentration of the range and shall be included with each gas calibration incorporating a blending device. Alternative procedures to verify the validity of the analyzer calibration curves generated using a gas divider are acceptable provided the procedures are approved in advance by the Administrator.

(b) Calibration gases (not including methanol) shall be traceable to within one percent of NIST (formerly NBS) gas standards, or other gas standards which have been approved by the Administrator.

(c) Span gases (not including methanol) shall be accurate to within two percent of true concentration, where true concentration refers to NIST (formerly NBS) gas standards, or other gas standards which have been approved by the Administrator.

(d) Methanol in air gases used for response factor determination shall:

(1) Be traceable to within ±2 percent of NIST (formerly NBS) gas standards, or other standards which have been approved by the Administrator; and

(2) Remain within ±2 percent of the labeled concentration. Demonstration of stability shall be based on a quarterly measurement procedure with a precision of ±2 percent (two standard deviations), or other method approved by the Administrator. The measurement procedure may incorporate multiple measurements. If the true concentration of the gas changes by more than two percent, but less than ten percent, the gas may be relabeled with the new concentration.

[56 FR 25773, June 5, 1991, as amended at 60 FR 34342, June 30, 1995]

§ 86.115–00 EPA dynamometer driving schedules.

Section 86.115–00 includes text that specifies requirements that differ from § 86.115–78. Where a paragraph in § 86.115–78 is identical and applicable to § 86.115–00, this may be indicated by specifying the corresponding paragraph and the statement ''[Reserved]. For guidance see § 86.115–78.''

(a) The driving schedules for the EPA Urban Dynamometer Driving Schedule, US06, SC03, and the EPA New York City Cycles are contained in appendix I of this part. The driving schedules are defined by a smooth trace drawn through the specified speed vs. time relationships. They each consist of a distinct non-repetitive series of idle, acceleration, cruise, and deceleration modes of various time sequences and rates.

(b) The driver should attempt to follow the target schedule as closely as possible (refer to § 86.128–00 for additional cycle driving instructions). The speed tolerance at any given time for these schedules, or for a driver's aid chart approved by the Administrator, are as follows:

(b)(1)–(c) [Reserved]. For guidance see § 86.115–78.

[61 FR 54891, Oct. 22, 1996]

§ 86.115–78 EPA urban dynamometer driving schedule.

(a) The EPA Urban Dynamometer Driving Schedule and the EPA New

York City Cycle are listed in appendix I of this part. The driving schedules are defined by a smooth trace drawn through the specified speed vs. time relationships. They each consist of a distinct nonrepetitive series of idle, acceleration, cruise, and deceleration modes of various time sequences and rates.

(b) The driver should attempt to follow the target schedule as closely as possible. The speed tolerance at any given time for these schedules, or for a driver's aid chart approved by the Administrator, are as follows:

(1) The upper limit is 2 mph (3.2 km/h) higher than the highest point on the trace within 1 second of the given time.

(2) The lower limit is 2 mph (3.2 km/h) lower than the lowest point on the trace within 1 second of the given time.

(3)(i) Speed variations greater than the tolerances (such as may occur during gear changes or braking spikes) are acceptable, provided they occur for less than 2 seconds on any occasion and are clearly documented as to the time and speed at that point of the driving schedule.

(ii) When conducted to meet the requirements of § 86.129–94 or § 86.153–98(d), up to three additional occurrences of speed variations greater than the tolerance are acceptable, provided they occur for less than 15 seconds on any occasion, and are clearly documented as to the time and speed at that point of the driving schedule.

(4) Speeds lower than those prescribed are acceptable, provided the vehicle is operated at maximum available power during such occurrences.

(5) When conducted to meet the requirements of § 86.129–94, § 86.132–96, § 86.146–96, or § 86.153–98(d), the speed tolerance shall be as specified above, except that the upper and lower limits shall be 4 mph (6.4 km/h).

(c) Figures B78–4(a) and B78–4(b) show the range of acceptable speed tolerances for typical points. Figure B78–4(a) is typical of portions of the speed curve which are increasing or decreasing throughout the 2-second time interval. Figure B78–4(b) is typical of portions of the speed curve which include a maximum or minimum value.

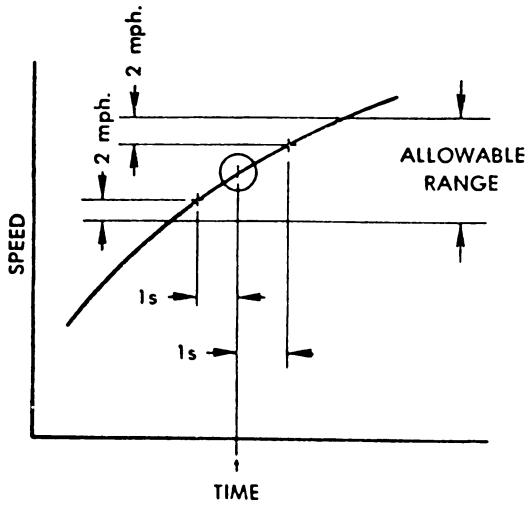

FIGURE B78-4a—DRIVERS TRACE, ALLOWABLE RANGE

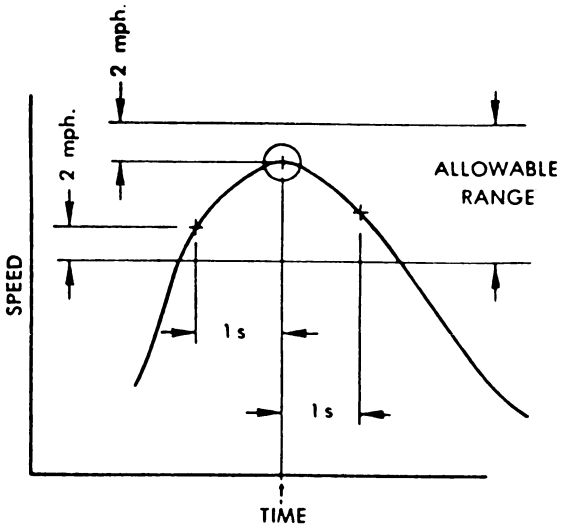

FIGURE B78-4b—DRIVERS TRACE, ALLOWABLE RANGE

[42 FR 32954, June 28, 1977, as amended at 43 FR 52920, Nov. 14, 1978; 58 FR 16030, Mar. 24, 1993; 59 FR 16296, Apr. 6, 1994]

§ 86.116–90 Calibrations, frequency and overview.

(a) Calibrations shall be performed as specified in § 86.117 through § 86.126.

(b) At least yearly or after any maintenance which could alter background emission levels, evaporative enclosure background emission measurements shall be performed.

(c) At least monthly or after any maintenance which could alter calibration, the following calibrations and checks shall be performed:

(1) Calibrate the hydrocarbon analyzers (both evaporative and exhaust instruments), carbon dioxide analyzer, carbon monoxide analyzer, oxides of nitrogen analyzer, methanol analyzer, and formaldehyde analyzer (certain analyzers may require more frequent calibration depending on particular equipment and uses).

(2) Calibrate the dynamometer. If the dynamometer receives a weekly performance check (and remains within calibration) the monthly calibration need not be performed.

(3) Perform a hydrocarbon and methanol (if methanol fuel is used) retention check and calibration on the evaporative emission enclosure.

(4) Calibrate the gas meters or flow instrumentation used for providing total flow measurement for particulate sampling.

(d) At least weekly or after any maintenance which could alter calibration, the following calibrations and checks shall be performed:

(1) Check the oxides of nitrogen converter efficiency, and

(2) Perform a CVS system verification.

(3) Run a performance check on the dynamometer. This check may be omitted if the dynamometer has been calibrated within the preceeding month.

(e) The CVS positive displacement pump or Critical Flow Venturi shall be calibrated following initial installation, major maintenance, or as necessary when indicated by the CVS system verification (described in § 86.119).

(f) Sample conditioning columns, if used in the CO analyzer train, should be checked at a frequency consistent with observed column life or when the indicator of the column packing begins to show deterioration.

[54 FR 14516, Apr. 11, 1989]

§ 86.116–94 Calibrations, frequency and overview.

(a) Calibrations shall be performed as specified in § 86.117 through § 86.126.

(b) At least yearly or after any maintenance which could alter background emission levels, evaporative enclosure background emission measurements shall be performed.

(c) At least monthly or after any maintenance which could alter calibration, the following calibrations and checks shall be performed:

(1) Calibrate the THC analyzers (both evaporative and exhaust instruments), methane analyzer, carbon dioxide analyzer, carbon monoxide analyzer, and oxides of nitrogen analyzer (certain analyzers may require more frequent calibration depending on particular equipment and uses).

(2) Calibrate the dynamometer. If the dynamometer receives a weekly performance check (and remains within calibration) the monthly calibration need not be performed.

(3) Perform an organic gas retention and calibration on the evaporative emissions enclosure (see § 86.117–90(c)).

(4) Calibrate the gas meters or flow instrumentation used for providing total flow measurement for particulate sampling.

(5) Check the oxides of nitrogen converter efficiency.

(d) At least weekly or after any maintenance which could alter calibration, the following calibrations and checks shall be performed:

(1) [Reserved]

(2) Perform a CVS system verification, and

(3) Run a performance check on the dynamometer. This check may be omitted if the dynamometer has been calibrated within the preceding month.

(e) The CVS positive displacement pump or Critical Flow Venturi shall be calibrated following initial installation, major maintenance, or as necessary when indicated by the CVS system verification (described in § 86.119).

(f) Sample conditioning columns, if used in the CO analyzer train, should be checked at a frequency consistent with observed column life or when the indicator of the column packing begins to show deterioration.

(g) The Administrator, upon request, may waive the requirement to comply with the specified methanol recovery tolerance (e.g., ±2 percent in §§ 86.117–90 and 86.119–90), and/or the specified methanol retention tolerance (e.g., ±4

percent in § 86.117–90), and instead require compliance with higher tolerances (not to exceed ±6 percent for recoveries and ±8 for retention), provided that:

(1) The Administrator determines that compliance with these specified tolerances is not practically feasible; and

(2) The manufacturer makes information available to the Administrator which indicates that the calibration tests and their results are consistent with good laboratory practice, and that the results are consistent with the results of calibration testing conducted by the Administrator.

[56 FR 25774, June 5, 1991, as amended at 58 FR 58422, Nov. 1, 1993; 59 FR 33913, July 1, 1994; 60 FR 34342, June 30, 1995]

§ 86.117–90 Evaporative emission enclosure calibrations.

The calibration of the evaporative emission enclosure consists of three parts: Initial and periodic determination of enclosure background emissions (hydrocarbons and methanol); initial determination of enclosure internal volume; and periodic hydrocarbon and methanol retention check and calibration. Methanol measurements may be omitted when methanol-fueled vehicles will not be tested in the evaporative enclosure.

(a) *Initial and periodic determination of enclosure background emissions.* Prior to its introduction into service, annually thereafter, and after any repair which can affect the enclosure background emissions, the enclosure shall be checked to determine that it does not contain materials which will themselves emit hydrocarbons or methanol.* Proceed as follows:

*NOTE: When methanol as well as hydrocarbons are present in the evaporative enclosure, the HFID hydrocarbon concentration measurement includes the partial response of the HFID to methanol plus the hydrocarbons. Determination of the HFID response to methanol, § 86.121, prior to its being placed in service is required for the determination of hydrocarbons.

(1) Zero and span (calibrate if required) the hydrocarbon analyzer.

(2) Purge the enclosure until a stable background hydrocarbon reading is obtained.

(3) Turn on the mixing blower (if not already on).

(4) Seal enclosure and measure background hydrocarbon concentration, background methanol, temperature, and barometric pressure. These are the initial readings C_{HCi}, C_{CH3OHi}, and P_{Bi}, T_i, for the enclosure background determination.

(5) Allow the enclosure to stand undisturbed without sampling for four hours.

(6) Measure the hydrocarbon concentration on the same FID and the methanol level. These are the final concentrations, C_{HCf} and C_{CH3OHf}. Also measure final temperature and barometric pressure.

(7) Calculate the mass change of methanol, hydrocarbons, and hydrocarbons plus methanol in the enclosure according to the equations in paragraph (d) of this section. The enclosure background emissions (hydrocarbons plus methanol) shall not be greater than 0.4g for the 4 hours.

(b) *Initial determination of enclosure internal volume.* Prior to its introduction into service the enclosure internal volume shall be determined by the following procedure:

(1) Carefully measure the internal length, width and height of the enclosure, accounting for irregularities (such as braces) and calculate the internal volume.

(2) Perform an enclosure calibration check according to paragraphs (c) (1) through (7) of this section.

(3) If the calculated mass does not agree within 2 percent of the injected propane mass, then corrective action is required.

(c) *Hydrocarbon and methanol (organic gas) retention check and calibration.* The hydrocarbon and methanol (if the enclosure is used for methanol-fueled vehicles) retention check provides a check upon the calculated volume and also measures the leak rate. Prior to its introduction into service and at least monthly thereafter (the methanol check can be performed less frequently, provided it is performed at least twice annually) the enclosure leak rate shall be determined as follows:

(1) Zero and span (calibrate if required) the hydrocarbon analyzer.

(2) Purge the enclosure until a stable background hydrocarbon reading is obtained.

(3) Turn on the mixing blower (if not already on).

(4) Seal enclosure and measure background hydrocarbon concentration, background methanol, temperature, and barometric pressure. These are the initial readings C_{HCi}, C_{CH3OHi}, T_i and P_{Bi} for the enclosure calibration.

(5) Inject into the enclosure a known quantity of pure propane (4g is a convenient quantity) and a known quantity of pure methanol (4g is a convenient quantity) in gaseous form; i.e., at a temperature of at least 150–155 °F (65–68 °C). The propane and methanol may be measured by volume flow or by mass measurement. The method used to measure the propane and methanol shall have an accuracy of ±0.5 percent of the measured value (less accurate methods may be used with the advanced approval of the Administrator). The methanol and propane tests do not need to be conducted simultaneously.

(6) After a minimum of 5 minutes of mixing, analyze the enclosure atmosphere for hydrocarbon and methanol content, also record temperature and pressure. These measurements are the final readings for the enclosure calibration as well as the initial readings for the retention check.

(7) To verify the enclosure calibration, calculate the mass of propane and the mass of methanol using the measurements taken in steps (4) and (6) (see paragraph (d) of this section). This quantity must be within ±2 percent of that measured in step 5 above. (For 1991–1995 calendar years, the difference may exceed ±2 percent for methanol, provided it does not exceed ±8 percent for 1991 testing and ±6 percent for 1992–1995 testing.)

(8) Allow the enclosure to remain sealed for a minimum of 4 hours, analyze the enclosure atmosphere for hydrocarbon and methanol content; record temperature and barometric pressure. These are the final readings for the hydrocarbon and methanol retention check.

(9) Calculate, using the equations in paragraph (d) of this section and the readings taken in step (8), the hydrocarbon and methanol mass. It may not differ by more than ±4 percent of the value in step (6). (For 1991–1995 calendar years, the difference may exceed ±4 percent for methanol, provided it does not exceed ±8 percent for 1991 testing and ±6 percent for 1992–1995 testing.)

(d) *Calculations.* (1) The calculation of net methanol and hydrocarbon mass change is used to determine enclosure background and leak rate. It is also used to check the enclosure volume measurements. The methanol mass change is calculated from the initial and final methanol samples, temperature and pressure according to the following equation:

$$M_{CH3OH} = V_X \times \frac{TE_f}{VE_f \times T_{SHEDf}}\left(C_{MX1i} \times AV_{1f}\right) + \left(C_{MS2f} \times AV_{2f}\right) - \frac{TE_i}{VE_i \times T_{SHED_i}}\left(C_{MS1i} \times AV_{1i}\right) + \left(C_{MS1i} \times AV_{2i}\right)$$

Where:

(i) M_{CH3OH}=Methanol mass change, μg.

(ii) V=Enclosure volume, ft^3, as measured in paragraph (b)(1) of this section.

(iii) TE=Temperature of sample withdrawn, °R.

(iv) T_{SHED}=Temperature of SHED, °R.

(v) VE=Volume of sample withdrawn, ft^3.

(vi) P_B=Barometric pressure at time of sampling, in. Hg.

(vii) C_{MS}=GC concentration of test sample.

(viii) AV=Volume of absorbing reagent in impinger (ml).

(ix) i=Initial sample.

(x) f=Final sample.
(xi) 1=First impinger.
(xii) 2=Second impinger.

(2) The hydrocarbon mass change is calculated from the initial and final FID readings of hydrocarbon concentration, methanol concentration with FID response to methanol, temperature, and pressure according to the following equation:

$$M_{HC} = kV \times 10^{-4} \left(\frac{\left(C_{HCf} - rC_{CH3OH_f}\right) \times P_{Bf}}{T_f} - \frac{\left(C_{HCi} - rC_{CH3OH_i}\right) \times P_{Bi}}{T_i} \right)$$

Where:

(i) M_{HC}=Hydrocarbon mass change, g.

(ii) C_{HC}=FID hydrocarbon concentration as ppm carbon including FID response to methanol in the sample.

(iii) C_{CH3OH}=Methanol concentration as ppm carbon

$$= \frac{1.501 \times 10^{-3} \times T_E}{P_B \times V_E} \left[\left(C_{S1} \times AV_1\right) + \left(C_2 \times AV_2\right) \right]$$

(iv) V=Enclosure volume ft^3 (m^3), as measured in paragraph (b)(1) of this section.

(v) r=FID response factor to methanol.

(vi) P_B=Barometric pressure, in. Hg. (kPa).

(vii) T=Enclosure ambient temperature, °R(°K).

(viii) i=Indicates initial reading.

(ix) f=Indicates final reading.

(x)(A) k=3.05.

(B) *For SI units*, k=17.60.

NOTE: Hydrocarbon concentration is stated in ppm carbon, that is, ppm propane × 3. Expressions in parentheses are for SI units.

[54 FR 14516, Apr. 11, 1989, as amended at 60 FR 34342, June 30, 1995]

§ 86.117–96 Evaporative emission enclosure calibrations.

The calibration of evaporative emission enclosures consists of three parts: initial and periodic determination of enclosure background emissions (hydrocarbons and methanol); initial determination of enclosure internal volume; and periodic hydrocarbon and methanol retention check and calibration. Methanol measurements may be omitted if methanol-fueled vehicles will not be tested in the evaporative enclosure. Alternate calibration methods may be used if shown to yield equivalent or superior results, and if approved in advance by the Administrator; specifically, more extreme temperatures may be used for determining calibration without affecting the validity of test results.

(a) *Initial and periodic determination of enclosure background emissions.* Prior to its introduction into service, annually thereafter, and after any repair that can affect the enclosure background emissions, the enclosure shall be checked to determine that it does not contain materials that will themselves emit hydrocarbons or methanol. When methanol as well as hydrocarbons are present in the evaporative enclosure, the HFID hydrocarbon concentration measurement includes the partial response of the HFID to methanol plus the hydrocarbons. Determination of the HFID response to methanol, § 86.121, prior to its being placed in service is required for the determination of hydrocarbons. Proceed as follows:

(1) Prepare the enclosure. (i) Variable-volume enclosures may be operated in either latched or unlatched volume configuration, as described in paragraph (b)(1) of this section. Ambient temperatures shall be maintained at 96±3 °F throughout the 4-hour period.

(ii) Fixed-volume enclosures may be operated with inlet and outlet flow streams either closed or open; if inlet and outlet flow streams are open, the air flowing into and out of the enclosure must be monitored in accordance with § 86.107–96(a)(1)(ii)(B). Ambient temperatures shall be maintained at 96±3 °F throughout the 4-hour period.

(iii) For running loss enclosures ambient temperatures shall be maintained at 95±3 °F throughout the 4-hour period. For running loss enclosures designed with a vent for makeup air, the enclosure shall be operated with the vent closed.

(2) The enclosure may be sealed and the mixing fan operated for a period of up to 12 hours before the 4-hour background sampling period begins.

(3) Zero and span (calibrate if required) the hydrocarbon analyzer.

(4) Prior to the background determination, purge the enclosure until a stable background hydrocarbon reading is obtained.

(5) Turn on the mixing blower (if not already on).

(6) Seal enclosure and measure background hydrocarbon concentration, background methanol, temperature, and barometric pressure.

These are the initial readings C_{HCi}, C_{CH_3OHi}, and P_{Bi}, T_i for the enclosure background determination.

(7) Allow the enclosure to stand undisturbed for four hours.

(8) Measure the hydrocarbon concentration on the same FID and the methanol level. These are the final concentrations, C_{HCf} and C_{CH_3OHf}. Also measure final temperature and barometric pressure.

(9) Calculate the mass change of methanol, hydrocarbons, and hydrocarbons plus methanol in the enclosure according to the equations in paragraph (d) of this section.

(i) *Diurnal enclosures.* The enclosure background emissions (hydrocarbons plus methanol) shall not be greater than 0.05g for the 4 hours.

(ii) *Running loss enclosures.* The enclosure background emissions (hydrocarbons plus methanol) shall not be greater than 0.2 grams for the 4 hours.

(b) *Initial determination of enclosure internal volume.* Prior to its introduction into service the enclosure internal volume shall be determined by the following procedure:

(1) Carefully measure the internal length, width and height of the enclosure, accounting for irregularities (such as braces) and calculate the internal volume. For variable-volume enclosures, latch the enclosure to a fixed volume when the enclosure is held at a constant temperature; this nominal volume shall be repeatable within ±0.5 percent of the reported value.

(2)–(3) [Reserved]

(c) *Hydrocarbon and methanol (organic gas) retention check and calibration.* The hydrocarbon and methanol (if the enclosure is used for methanol-fueled vehicles) retention check provides a check upon the calculated volume and also measures the leak rate. The enclosure leak rate shall be determined prior to its introduction into service, following any modifications or repairs to the enclosure that may affect the integrity of the enclosure, and at least monthly thereafter. (The methanol check can be performed less frequently, provided it is performed at least twice annually.) If six consecutive monthly retention checks are successfully completed without corrective action, the enclosure leak rate may be determined quarterly thereafter as long as no corrective action is required.

(1) An enclosure to be used for the diurnal emission test (see § 86.133–96) shall be calibrated according to the following procedure. Calibration for hydrocarbon and methanol may be conducted simultaneously or in sequential test runs.

(i) Zero and span (calibrate if required) the hydrocarbon analyzer.

(ii) Purge the enclosure until a stable background hydrocarbon reading is obtained.

(iii) Turn on the mixing blowers (if not already on).

(iv) [Reserved]

(v) Turn on the ambient temperature control system (if not already on) and adjust it for an initial temperature of 96 °F (36 °C). On variable-volume enclosures, latch the enclosure to the appropriate volume position for the set temperature. On fixed-volume enclosures close the outlet and inlet flow streams.

(vi) When the enclosure stabilizes at 96±3 °F (36±2 °C), seal the enclosure and measure background hydrocarbon concentration, background methanol, temperature, and barometric pressure. These are the initial readings C_{HCi}, C_{CH_3OHi}, T_i, and P_{Bi} for the enclosure calibration.

(vii) For evaporative emission enclosures which will be used to measure evaporative emissions from vehicles meeting evaporative standards equal to or above 2.0 grams, inject into the enclosure 0.5 to 6 grams of pure methanol at a temperature of at least 150 °F (65 °C) and/or 0.5 to 6 grams of pure propane at lab ambient temperatures. For evaporative emission enclosures which will be used to measure evaporative emissions from vehicles meeting evaporative standards below 2.0 grams, inject into the enclosure 0.5 to 1.0 grams of pure methanol at a temperature of at least 150 °F (65 °C) and/or 0.5 to 1.0 grams of pure propane at lab ambient temperature. The injected quantity may be measured by volume flow or by mass measurement. The method used to measure the quantity of methanol and propane shall have an accuracy of ±0.2 percent of measured value (less accurate methods may be used with the advance approval of the Administrator).

(viii) After a minimum of 5 minutes of mixing, analyze the enclosure atmosphere for hydrocarbon and methanol content, also record temperature and pressure. These measurements are the final readings for the enclosure calibration as well as the initial readings for the retention check.

(ix) To verify the enclosure calibration, calculate the mass of propane and the mass of methanol using the measurements taken in paragraphs (c)(1)(vi) and (viii) of this section. See paragraph (d) of this section. This quantity must be within ±2 percent of that measured in paragraph (c)(1)(vii) of this section. (For 1991–1995 calendar years, the difference may exceed ±2 percent for methanol, provided it does not exceed ±6 percent.)

(x) For variable-volume enclosures, unlatch the enclosure from the nominal volume configuration. For fixed-volume enclosures, open the outlet and inlet flow streams.

(xi) Start cycling the ambient temperature from 96 °F to 72 °F and back to 96 °F over a 24-hour period, according to the profile specified in § 86.133–96 and appendix II of this part, within 15 minutes of sealing the enclosure.

(xii) At the completion of the 24-hour cycling period, analyze the enclosure atmosphere for hydrocarbon and methanol content; determine the net withdrawn methanol (in the case of diurnal emission testing with fixed volume enclosures); record temperature and barometric pressure. These are the final readings for the hydrocarbon and methanol retention check. The final hydrocarbon and methanol mass, calculated in paragraph (d) of this section, shall be within three percent of that determined in paragraph (c)(1)(viii) of this section. (For 1991–1995 calendar years, the difference may exceed ±3 percent for methanol, provided it does not exceed ±6 percent.)

(2) An enclosure to be used for the running loss test (see § 86.134–96) shall meet the calibration and retention requirements of § 86.117–90(c).

(3) Enclosures calibrated according to the procedures specified in either paragraph (c)(1) or (c)(2) of this section may be used for hot soak testing (see § 86.138).

(d) *Calculations.* (1) The calculation of net methanol and hydrocarbon mass change is used to determine enclosure background and leak rate. It is also used to check the enclosure volume measurements. The methanol mass change is calculated from the initial and final methanol samples, the net withdrawn methanol (in the case of diurnal emission testing with fixed-volume enclosures), and initial and final temperature and pressure according to the following equation:

$$M_{CH_3OH} = V_n \times \left[\frac{(C_{MS1f} \times AV_{1f}) + (C_{MS2f} \times AV_{2f})}{V_{E_f}}\right] - \left[\frac{(C_{MS1i} \times AV_{1i}) + (C_{MS2i} \times AV_{2i})}{V_{E_i}}\right] + (M_{CH_3OH,out} - M_{CH_3OH,in})$$

Where:

(i) M_{CH3OH}=Methanol mass change, μg.

(ii) V=Enclosure volume, ft³, as measured in paragraph (b)(1) of this section.

(iii)–(iv) [Reserved]

(v) V_E=Volume of sample withdrawn, ft³. Sample volumes must be corrected for differences in temperature to be consistent with determination of V_n, prior to being used in the equation.

(vi) P_B=Barometric pressure at time of sampling, in. Hg.

(vii) C_{MS}=GC concentration of test sample.

(viii) AV=Volume of absorbing reagent in impinger (ml).

(ix) i=Initial sample.

(x) f=Final sample.

(xii) 1=First impinger.

(xiii) 2=Second impinger.

(xiv) M_{CH3OH},out=mass of methanol exiting the enclosure, in the case of fixed volume enclosures for diurnal emission testing, μg.

(xv) M_{CH3OH},in=mass of methanol exiting the enclosure, in the case of fixed volume enclosures for diurnal emission testing, μg.

(2) The hydrocarbon mass change is calculated from the initial and final FID readings of hydrocarbon concentration, methanol concentration with FID response to methanol, the net withdrawn hydrocarbon and methanol (in the case of diurnal emission testing with fixed-volume enclosures), and initial and final temperature and pressure according to the following equation:

$$M_{HC} = (kV_n \times 10^{-4}) \times \left(\frac{(C_{HC_f} - rC_{CH_3OH_f})}{T_f} - \frac{(C_{HC_i} - rC_{CH_3OH_i})P_{B_i}}{T_i}\right) + M_{HC,out} - M_{HC,in}$$

Where,

(i) M_{HC}=Hydrocarbon mass change, g.

(ii) C_{HC}=FID hydrocarbon concentration as ppm carbon, that is, ppm propane × 3, including FID response to methanol in the sample.

(iii) C_{CH3OH}=Methanol concentration as ppm carbon

$$= \frac{1.501 \times 10^{-3} \times T_E}{P_B \times V_E}\left[(C_{S1} \times AV_1) + (C_2 \times AV_2)\right]$$

(iv) V=Enclosure volume ft³ (m³), as measured in paragraph (b)(1) of this section.

(v) r=FID response factor to methanol.

(vi) P_B=Barometric pressure, in. Hg. (kPa).

(vii) T=Enclosure ambient temperature, R(K).

(viii) i=Indicates initial reading.

(ix) f=Indicates final reading.

(x)(A) k=3.05.

(B) For SI units, k=17.60.

(xi) $M_{HC,\,out}$=mass of hydrocarbon exiting the enclosure, in the case of fixed-volume enclosures for diurnal emission testing, g.

(xii) $M_{HC,\,in}$=mass of hydrocarbon entering the enclosure, in the case of fixed-volume enclosures for diurnal emission testing, g.

(3) For variable-volume enclosures, defined in §86.107(a)(1)(i), the following simplified form of the hydrocarbon mass change equation may be used:

$$M_{HC} = \left(\frac{kP_B V_n \times 10^{-4}}{T}\right) \times \left[\left(C_{HC_f} - rC_{CH_3OH_f}\right) - \left(C_{HC_i} - rC_{CH_3OH_i}\right)\right]$$

(e) *Calibration of equipment for point-source testing of running losses.* For the point-source method, the running loss fuel vapor sampling system shall be calibrated as a CVS system, as specified in § 86.119, with the additional specification that the vapor sampling system verification be conducted as follows:

(1) The following ''gravimetric'' technique can be used to verify that the vapor sampling system and analytical instruments can accurately measure a mass of gas that has been injected into the system. If the vapor sampling system will be used only in the testing of petroleum-fueled engines, the system verification may be performed using propane. If the vapor sampling system will be used with methanol-fueled vehicles as well as petroleum-fueled vehicles, the system verification performance check must include a methanol check in addition to the propane check. (Verification can also be accomplished by constant flow metering using critical flow orifice devices.)

(i) Obtain a small cylinder that has been charged with pure propane gas. Obtain another small cylinder that has been charged with pure methanol if the system will be used for methanol-fueled vehicle testing. Since this cylinder will be heated to 150–155 °F, care must be taken to ensure that the liquid volume of methanol placed in the cylinder does not exceed approximately one-half of the total volume of the cylinder.

(ii) Determine a reference cylinder weight to the nearest 0.01 grams.

(iii) Operate the vapor sampling system in the normal manner and release a known quantity of pure propane into the most frequently used fuel vapor collector during the sampling period (approximately 5 minutes).

(iv) Continue to operate the vapor sampling system in the normal manner and release a known quantity of pure methanol into the system during the sampling period (approximately 5 minutes).

(v) The calculations of § 86.144 are performed in the normal way, except in the case of propane. The density of propane (17.30 g/ft^3/carbon atom (0.6109 kg/m^3/carbon atom)) is used in place of the density of exhaust hydrocarbons. In the case of methanol, the density of 37.71 g/ft^3 (1.332 kg/m^3) is used.

(vi) The gravimetric mass is subtracted from the vapor sampling system measured mass and then divided by the gravimetric mass to determine the percent accuracy of the system.

(vii) The cause for any discrepancy greater than ±2 percent must be found and corrected.

(2) This procedure shall be conducted in the point-source running loss test environment with the collector installed in a vehicle in the normal test configuration. The fuel of the test vehicle shall either be diesel, or it shall be kept under 100 °F (38 °C). Two to six grams of pure propane and two to six grams of pure methanol shall be injected into the collector while the vehicle is operated over one Urban Dynamometer Driving Schedule (UDDS), as described in § 86.115 and appendix I of this part. The propane and methanol injections shall be conducted at the ambient temperature of 95±5 °F (35±3 °C).

[58 FR 16030, Mar. 24, 1993, as amended at 60 FR 34343, June 30, 1995; 60 FR 43890, Aug. 23, 1995; 70 FR 72927, Dec. 8, 2005]

§ 86.118–00 Dynamometer calibrations.

(a) The dynamometer shall be calibrated at least once each month or performance verified at least once each week and then calibrated as required.

(b) For large single roll electric dynamometers or equivalent dynamometer configurations, the dynamometer adjustment settings for each vehicle's emission test sequence shall be verified by comparing the force imposed during dynamometer operation with actual road load force.

[61 FR 54891, Oct. 22, 1996]

§ 86.118–78 Dynamometer calibration.

(a) The dynamometer shall be calibrated at least once each month or performance verified at least once each week and then calibrated as required. The calibration shall consist of the manufacturer's recommended calibration procedure plus a determination of the dynamometer frictional power absorption at 50.0 mph (80.5 km/h). One method for determining dynamometer frictional power absorption at 50.0 mph (80.5 km/h) is described below, other methods may be used if shown to yield equivalent results. The measured absorbed road power includes the dynamometer friction as well as the power absorbed by the power absorption unit. The dynamometer is driven above the test speed range. The device used to drive the dynamometer is then disengaged from the dynamometer and the roll(s) is (are) allowed to coast down. The kinetic energy of the system is dissipated by the dynamometer. This method neglects the variations in roll bearing friction due to the drive axle weight of the vehicle. The inertia of the free (rear) roll may be neglected in the case of dynamometers with paired rolls.

(1) Devise a method to determine the speed of the drive roll if it is not already measured. A fifth wheel, revolution pickup, or other suitable means may be used.

(2) Place a vehicle on the dynamometer or devise another method of driving the dynamometer.

(3) Engage the inertial flywheel or other inertial simulation system for the most common vehicle mass category for which the dynamometer is used. In addition other vehicle mass categories may be calibrated, if desired.

(4) Drive the dynamometer up to 50.0 mph (80.5 km/h).

(5) Record indicated road power.

(6) Drive the dynamometer up to 60.0 mph (96.9 km/h).

(7) Disengage the device used to drive the dynamometer.

(8) Record the time for the dynamometer drive roll to coastdown from 55.0 mph (88.5 km/h) to 45 mph (72.4 km/h).

(9) Adjust the power absorption unit to a different level.

(10) Repeat steps (4) to (9) above sufficient times to cover the range of road power used.

(11) Calculate absorbed road power (HP_d). See paragraph (c) of this section.

(12) Plot indicated road load power at 50 mph (80.5 km/h) versus road load power at 50 mph (80.5 km/h) as shown in Figure B78–5.

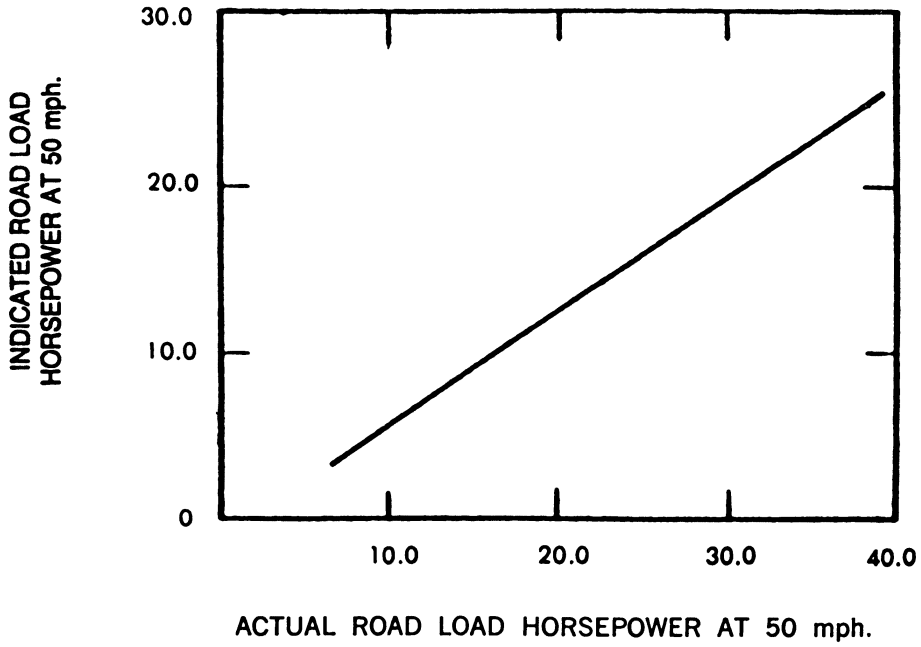

FIGURE B78-5—ROAD LOAD HORSEPOWER, ACTUAL VS. INDICATED

(b) The performance check consists of conducting a dynamometer coastdown at one or more inertia-horsepower settings and comparing the coastdown time to that recorded during the last calibration. If the coastdown times differ by more than 1 s, a new calibration is required.

(c) *Calculations.* The road load power actually absorbed by the dynamometer is calculated from the following equation:

$$HP_d = (1/2)\ (W/32.2)\ (V^2_1 - V^2_2)/(550t)$$

where:

HP_d = Power, horsepower (kilowatts)
W = Equivalent inertia, 1b (kg)
V_1 = Initial Velocity, ft/s (m/s) (55 mph = 88.5 km/h = 80.67 ft/s = 24.58 m/s)
V_2 = Final Velocity, ft/s (m/s) (45 mph = 72.4 km/h = 66 ft/s = 20.11 m/s)
t = elapsed time for rolls to coast from 55 mph to 45 mph (88.5 to 72.4 m/h)

(Expressions in parentheses are for SI units.) When the coastdown is from 55 to 45 mph (88.5 to 72.4 km/h) the above equation reduces to:

$$HP_d = 0.06073\ (W/t)$$

for SI units,

$$HP_d = 0.09984\ (W/t)$$

[42 FR 32954, June 28, 1977, as amended at 53 FR 475, Jan. 7, 1988]

§ 86.119–90 CVS calibration.

The CVS is calibrated using an accurate flowmeter and restrictor valve. Measurements of various parameters are made and related to flow through the unit. Procedures used by EPA for both PDP and CFV are outlined below. Other procedures yielding equivalent results may be used if approved in advance by the Administrator. After the calibration curve has been obtained,

verification of the entire system can be performed by injecting a known mass of gas into the system and comparing the mass indicated by the system to the true mass injected. An indicated error does not necessarily mean that the calibration is wrong, since other factors can influence the accuracy of the system, *e.g.*, analyzer calibration. A verification procedure is found in paragraph (c) of this section.

(a) *PDP calibrations.* (1) The following calibration procedure outlines the equipment, the test configuration, and the various parameters which must be measured to establish the flow rate of the CVS pump. All the parameters related to the pump are simultaneously measured with the parameters related to a flowmeter which is connected in series with the pump. The calculated flow rate ft^3/min (at pump inlet absolute pressure and temperature) can then be plotted versus a correlation function which is the value on a specific combination of pump parameters. The linear equation which relates the pump flow and the correlation function is then determined. In the event that a CVS has a multiple speed drive, a calibration for each range used must be performed.

(2) This calibration procedure is based on the measurement of the absolute values of the pump and flowmeter parameters that relate the flow rate at each point. Three conditions must be maintained to assure the accuracy and integrity of the calibration curve. First, the pump pressures should be measured at taps on the pump rather than at the external piping on the pump inlet and outlet. Pressure taps that are mounted at the top center and bottom center of the pump drive headplate are exposed to the actual pump cavity pressures, and therefore reflect the absolute pressure differentials. Secondly, temperature stability must be maintained during the calibration. The laminar flowmeter is sensitive to inlet temperature oscillations which cause the data points to be scattered. Gradual changes (±2 °F (1.1 °C)) in temperature are acceptable as long as they occur over a period of several minutes. Finally, all connections between the flowmeter and the CVS pump must be absolutely void of any leakage.

(3) During an exhaust emission test the measurement of these same pump parameters enables the user to calculate the flow rate from the calibration equation.

(4) Connect a system as shown in Figure B90–8. Although particular types of equipment are shown, other configurations that yield equivalent results may be used if approved in advance by the Administrator. For the system indicated, the following data with given accuracy are required:

CALIBRATION DATA MEASUREMENTS

Parameter	Symbol	Units	Tolerances
Barometric pressure (corrected).	P_B	in. Hg (kPa)	±0.01 in. Hg (±0.034 kPa)
Ambient temperature	T_A	°F(°C)	±0.5 °F (±0.28 °C)
Air temperature into LFE	ETI	°F(°C)	±0.25 °F (±0.14 °C)
Pressure depression upstream of LFE.	EPI	in. H_2O (kPa)	±0.05 in. H_{20} (±0.012 kPa)
Pressure drop across the LFE matrix.	EDP	in. H_2O (kPa)	±0.005 in. H_2O (±0.001 kPa)
Air temperature at CVS pump inlet.	PTI	°F(°C)	±0.5 °F (±0.3 °C)
Pressure depression at CVS pump inlet.	PPI	in. fluid (kPa)	±0.05 in. fluid (±0.022 kPa)
Specific gravity of manometer fluid (1.75 oil).	Sp. Gr.		
Pressure head at CVS pump outlet.	PPO	in. fluid (kPa)	±0.05 in. fluid (±0.022 kPa)
Air temperature at CVS pump outlet (optional).	PTO	°F(°C)	±0.5 °F (±0.28 °C)
Pump revolutions during test period.	N	Revs	±1 Rev.
Elapsed time for test period	t	sec	±0.05 sec.

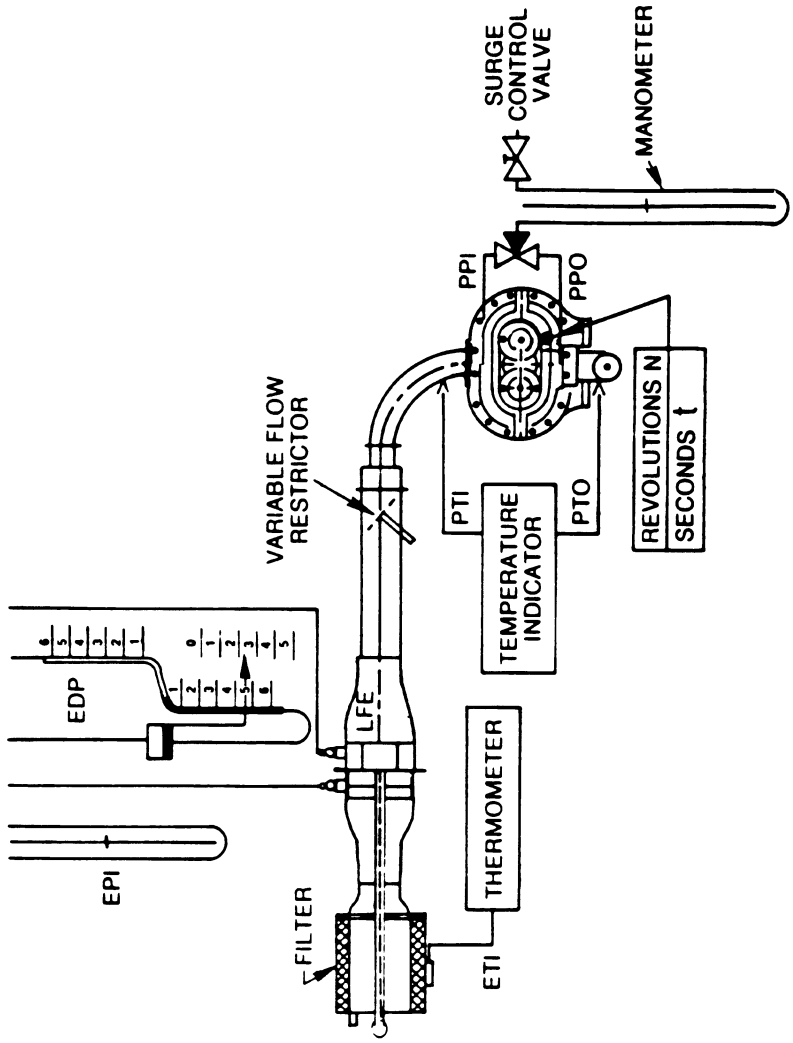

FIGURE B90–8 PDP-CVS CALIBRATION CONFIGURATION

(5) After the system has been connected as shown in Figure B90–8, set the variable restrictor in the wide open position and run the CVS pump for 20 minutes. Record the calibration data.

(6) Reset the restrictor valve to a more restricted condition in an increment of pump inlet depression (about 4 in. H_2O (1.0 kPa) that will yield a minimum of six data points for the total calibration. Allow the system to stabilize for 3 minutes and repeat the data acquisition.

(7) Data analysis:

(i) The air flow rate, Q_s, at each test point is calculated in standard cubic feet per minute from the flowmeter data using the manufacturer's prescribed method.

(ii) The air flow rate is then converted to pump flow, V_o, in cubic feet per revolution at absolute pump inlet temperature and pressure:

$V_o = (Q_s/n) \times (T_p/528) \times (29.92/P_p)$

Where:

(A) V_o = Pump flow ft³/rev (m³/rev) at T_p, P_p.
(B) Q_s = Meter air flow rate in standard cubic feet per minute, standard conditions are 68 °F, 29.92 in. Hg (20 °C, 101.3 kPa).
(C) n = Pump speed in revolutions per minute.
(D)(*1*) T_p = Pump inlet temperature, °R(°K) = PTI + 460.

(*2*) *For SI units*, T_p = PTI + 273.

(E)(*l*) P_p = Absolute pump inlet pressure, in. Hg. (kPa) = P_B − PPI (SP.GR./13.57).
(*2*) *For SI units*, $P_p = P_B$ − PPI.

Where:

(F) P_B = barometric pressure, in. Hg. (kPa).
(G) PPI = Pump inlet depression, in. fluid (kPa).
(H) SP.GR. = Specific gravity of manometer fluid relative to water.

(iii) The correlation function at each test point is then calculated from the calibration data:

$$X_o = \frac{1}{n}\sqrt{\frac{\Delta P}{P_e}}$$

Where:

(A) X_o = correlation function.
(B) ΔP_p = the pressure differential from pump inlet to pump outlet, in. Hg (kPa) = $P_e - P_p$.

(C)(*1*) P_e = Absolute pump outlet pressure, in Hg, (kPa) = $_{PB}$ + PPO (SP.GR./13.57).

(*2*) *For SI units*, $P_e = P_B$ + PPO.

Where:

(D) PPO = Pressure head at pump outlet, in. fluid (kPa).
(iv) A linear least squares fit is performed to generate the calibration equations which have the forms:
$V_o = D_o - M(X_o)$
$n = A - B(\Delta P_p)$
D_o, M, A, and B are the slope-intercept constants describing lines.

(8) A CVS system that has multiple speeds should be calibrated on each speed used. The calibration curves generated for the ranges will be approximately parallel and the intercept values, D_o, will increase as the pump flow range decreases.

(9) If the calibration has been performed carefully, the calculated values from the equation will be within ±0.50 percent of the measured value of V_o. Values of M will vary from one pump to another, but values of D_o for pumps of the same make, model, and range should agree within ±3 percent of each other. Particulate influx from use will cause the pump slip to decrease as reflected by lower values for M. Calibrations should be performed at pump start-up and after major maintenance to assure the stability of the pump slip rate. Analysis of mass injection data will also reflect pump slip stability.

(b) *CFV calibration*. (1) Calibration of the CFV is based upon the flow equation for a critical venturi. Gas flow is a function of inlet pressure and temperature:

$$Q_s = \frac{K_v P}{\sqrt{T}}$$

Where:

(i) Q_s=Flow.
(ii) K_v=Calibration coefficient.
(iii) P=Absolute pressure.
(iv) T=Absolute temperature.

The calibration procedure described below establishes the value of the calibration coefficient at measured values of pressure, temperature and air flow.

(2) The manufacturer's recommended procedure shall be followed for calibrating electronic portions of the CFV.

(3) Measurements necessary for flow calibration are as follows:

CALIBRATION DATA MEASUREMENTS

Parameter	Symbol	Units	Tolerances
Barometric pressure (corrected)	P_b	Inches Hg (kPa)	±.01 in Hg (±.034 kPa)
Air temperature, flowmeter	ETI	°F (°C)	±.25°F (±.14°C)
Pressure depression upstream of LFE	EPI	Inches H_2O (kPa)	±.05 in H_2O (±.012 kPa)
Pressure drop across LFE matrix	EDP	Inches H_2O (kPa)	±.005 in H_2O (±.001 kPa)
Air flow	Q_s	Ft³/min. (m³/min,)	±.5 pct

CALIBRATION DATA MEASUREMENTS—Continued

Parameter	Symbol	Units	Tolerances
CFV inlet depression	PPI	Inches fluid (kPa)	±.13 in fluid (±.055 kPa)
CFV outlet pressure	PPO	Inches Hg (kPa)	±0.05 in. Hg (±0.17 kPa) [1]
Temperature at venturi inlet	T_v	°F (°C)	±0.5°F (±0.28°C)
Specific gravity of manometer fluid (1.75 oil)	Sp. Gr.		

[1] Requirement begins August 20, 2001.

(4) Set up equipment as shown in Figure B90–9 and check for leaks. Any leaks between the flow measuring device and the critical flow venturi will seriously affect the accuracy of the calibration.

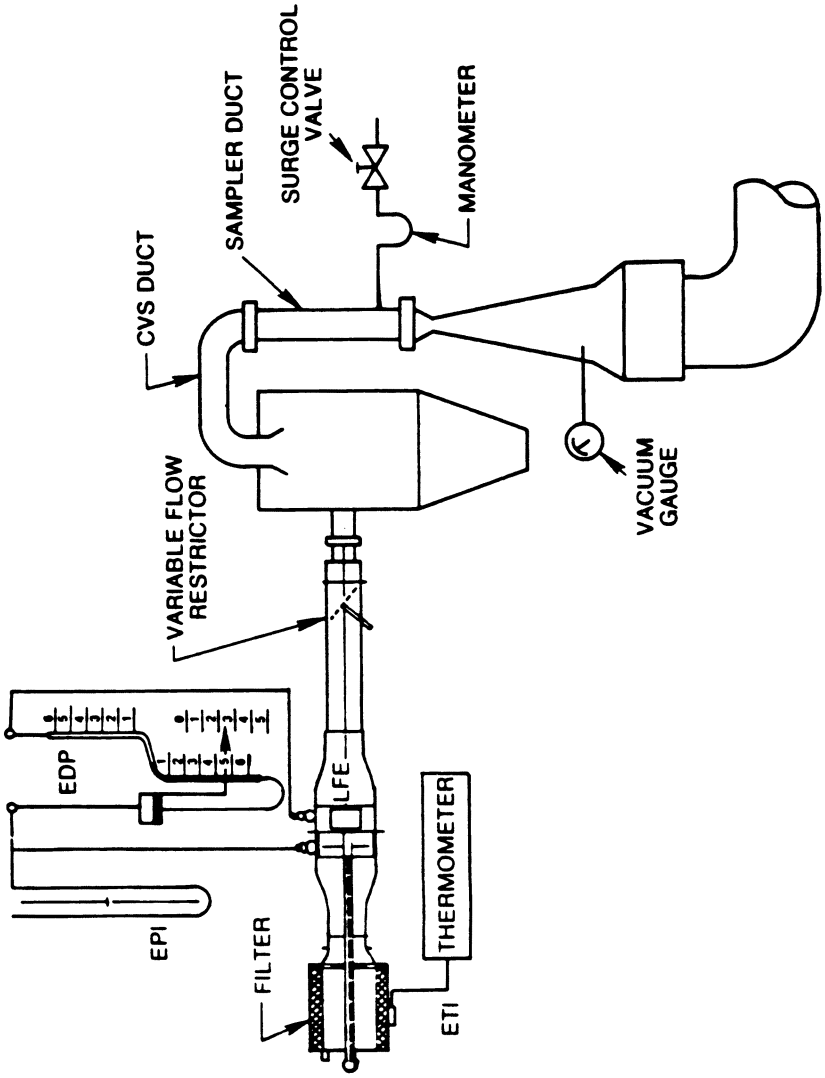

FIGURE B90-9 CFV-CVS CALIBRATION CONFIGURATION

(5) Set the variable flow restrictor to the open position, start the blower, and allow the system to stabilize. Record data from all instruments.

(6) Vary the flow restrictor and make at least 8 readings across the critical flow range of the venturi.

(7) *Data analysis:* The data recorded during the calibration are to be used in the following calculations:

(i) The air flow rate, Q_s, at each test point is calculated in standard cubic feet per minute from the flow meter data using the manufacturer's prescribed method.

(ii) Calculate values of the calibration coefficient for each test point:

$$K_v = \frac{Q_s\sqrt{T_v}}{P_v}$$

Where:

(A) Q_s = Flow rate in standard cubic feet per minute, standard conditions are 68 °F 29.92 in. Hg (20 °C, 101.3 kPa).

(B) T_v = Temperature at venturi inlet, °R(°K).

(C)(*1*) P_v = Pressure at venturi inlet, mm Hg (kPa) = P_B − PPI (SP.GR./13.57).

(*2*) *For SI units*, $P_v = P_B$ − PPI.

Where:

(D) PPI = Venturi inlet pressure depression, in. fluid (kPa).

(E) SP.GR. = Specific gravity of manometer fluid, relative to water.

(iii) Plot K_v as a function of venturi inlet pressure. For sonic flow K_v will have a relatively constant value. As pressure decreases (vacuum increases), the venturi becomes unchoked and K_v decreases. See Figure B90–10.

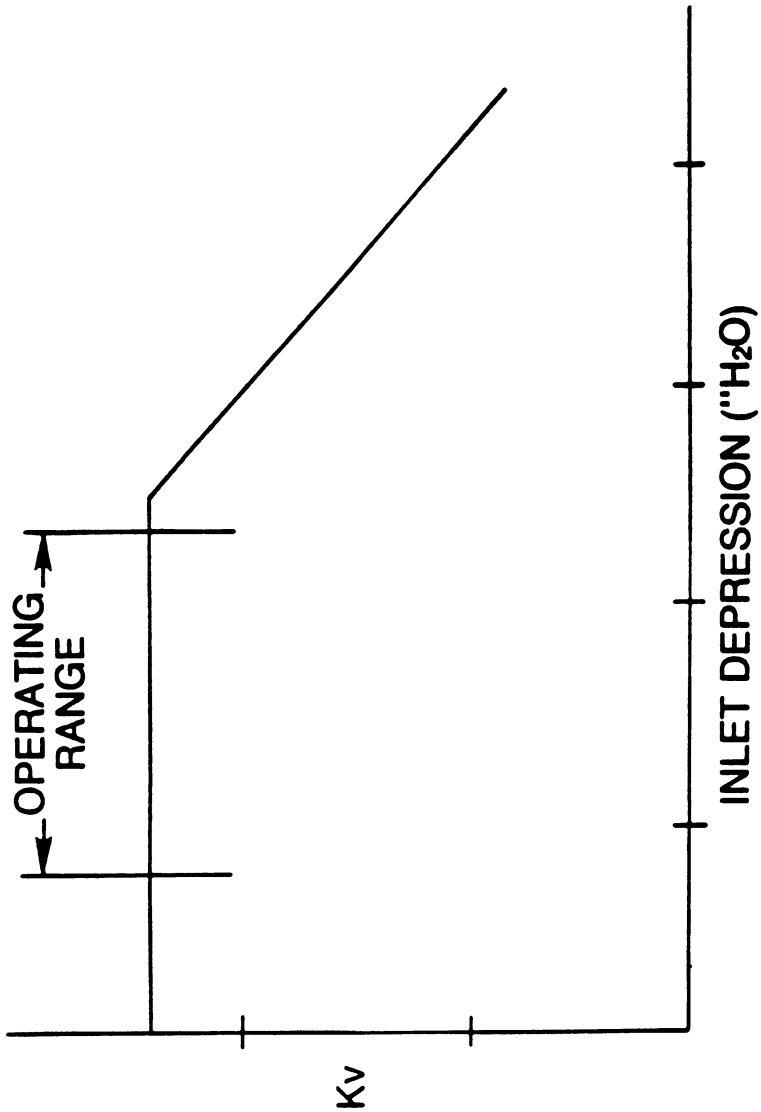

FIGURE B90-10 SONIC FLOW CHOKING

(iv) For a minimum of 8 points in the critical region calculate an average K_v and the standard deviation.

(v) If the standard deviation exceeds 0.3 percent of the average K_v take corrective action.

(8) Calculation of a parameter for monitoring sonic flow in the CFV during exhaust emissions tests:

(i) *Option 1.* (A) CFV pressure ratio. Based upon the calibration data selected to meet the criteria for paragraphs (d)(7) (iv) and (v) of this section, in which K_v is constant, select the data values associated with the calibration point with the lowest absolute venturi

inlet pressure. With this set of calibration data, calculated the following CFV pressure ratio limit, $Pr_{ratio\text{-}lim}$:

$$Pr_{ratio\text{-}lim} = \frac{P_{out\text{-}cal}}{P_{in\text{-}cal}}$$

Where:

$P_{in\text{-}cal}$ = Venturi inlet pressure (PPI in absolute pressure units), and

$P_{out\text{-}cal}$ = Venturi outlet pressure (PPO in absolute pressure units), measured at the exit of the venturi diffuser outlet.

(B) The venturi pressure ratio ($Pr_{ratio\text{-}i}$) during all emissions tests must be less than, or equal to, the calibration pressure ratio limit ($Pr_{ratio\text{-}lim}$) derived from the CFV calibration data, such that:

$$\frac{P_{out\text{-}i}}{P_{in\text{-}i}} = Pr_{ratio\text{-}i} \leq Pr_{ratio\text{-}lim}$$

Where:

$P_{in\text{-}i}$ and $P_{out\text{-}i}$ are the venturi inlet and outlet pressures, in absolute pressure units, at each i-th interval during the emissions test.

(ii) *Option 2.* Other methods: With prior Administrator approval, any other method may be used that assure that the venturi operates at sonic conditions during emissions tests, provided the method is based upon sound engineering principles.

(c) *CVS System Verification.* The following ''gravimetric'' technique can be used to verify that the CVS and analytical instruments can accurately measure a mass of gas that has been injected into the system. If the CVS and analytical system will be used only in the testing of petroleum-fueled engines, the system verification may be performed using either propane or carbon monoxide. If the CVS and analytical system will be used with methanol-fueled vehicles as well as petroleum-fueled vehicles, system verification performance check must include a methanol check in addition to either the propane or carbon monoxide check. (Verification can also be accomplished by constant flow metering using critical flow orifice devices.)

(1) Obtain a small cylinder that has been charged with pure propane or carbon monoxide gas (CAUTION—carbon monoxide is poisonous).

(2) Determine a reference cylinder weight to the nearest 0.01 grams.

(3) Operate the CVS in the normal manner and release a quantity of pure propane or carbon monoxide into the system during the sampling period (approximately 5 minutes).

(4) Following completion of step (3) in this paragraph (c) (if methanol injection is required), continue to operate the CVS in the normal manner and release a known quantity of pure methanol (in gaseous form) into the system during the sampling period (approximately five minutes). This step does not need to be performed with each verification, provided that it is performed at least twice annually.

(5) The calculations of § 86.144 are performed in the normal way, except in the case of propane. The density of propane (17.30 g/ft^3/carbon atom (0.6109 kg/m^3/carbon atom)) is used in place of the density of exhaust hydrocarbons. In the case of carbon monoxide, the density of 32.97 g/ft^3 (1.164 kg/m^3) is used. In the case of methanol, the density of 37.71 g/ft^3 (1.332 kg/m^3) is used.

(6) The gravimetric mass is subtracted from the CVS measured mass and then divided by the gravimetric mass to determine the percent accuracy of the system.

(7) The cause for any discrepancy greater than ±2 percent must be found and corrected. (For 1991–1995 calendar years, discrepancies greater than ±2 percent are allowed for the methanol test, provided that they do not exceed ±8 percent for 1991 testing or ±6 percent for 1992–1995 testing.)

[54 FR 14518, Apr. 11, 1989, as amended at 60 FR 34344, June 30, 1995; 62 FR 47121, Sept. 5, 1997; 63 FR 24448, May 4, 1998; 65 FR 8278, Feb. 18, 2000]

§ 86.120–82 Gas meter or flow instrumentation calibration, particulate measurement.

Sampling for particulate emissions requires the use of gas meters or flow instrumentation to measure flow through the particulate filters. The meters or instrumentation shall receive initial and periodic calibrations as follows:

(a) Install a standard air flow measurement device upstream of the gas meter or instrument being calibrated.

This standard device shall measure air flow at standard conditions with an accuracy of ±1 percent. Standard conditions are defined as 68 °F (20 °C) and 29.92 in. Hg (101.3 kPa). A critical flow orifice, a bellmouth, or a laminar flow element is recommended as the standard device.

(b) Flow air through the calibration system at the sample flow rate used for particulate testing and at the backpressure which occurs during the sample test.

(c) When the temperature and pressure in the system have stabilized, measure the gas meter or instrument indicated volume over a time period of at least 5 minutes and until a flow volume of at least ±1 percent accuracy can be determined by the standard device. Record the stabilized air temperature and pressure upstream of the gas meter or instrument being calibrated and as required for the standard device.

(d) Calculate air flow at standard conditions as measured by both the standard device and the gas meter or instrument being calibrated.

(e) Repeat the procedures of paragraphs (b) through (d) of this section using flow rates which are 10 percent above the nominal sampling flow rate and 10 percent below the nominal sampling flow rate.

(f) If the air flow at standard conditions measured by the gas meter or instrument being calibrated differs by more than ±1 percent from the standard measurement at any of the three measured flow rates, then a correction shall be made by either of the following two methods:

(1) Mechanically adjust the gas meter or instrument so that it agrees within 1 percent of the standard measurement at the three specified flow rates, or

(2) Develop a continuous best fit calibration curve for the gas meter (as a function of the standard device flow measurement) from the three calibration points that represents the data to within 1 percent at all points to determine corrected flow.

(g) *Other systems.* A bell prover may be used to calibrate the gas meter if the procedure outlined in ANSI B109.1–1973 is used. Prior approval by the Administrator is not required to use the bell prover.

[45 FR 14515, Mar. 5, 1980]

§ 86.120–94 Gas meter or flow instrumentation calibration; particulate, methanol and formaldehyde measurement.

(a) Sampling for particulate, methanol and formaldehyde emissions requires the use of gas meters or flow instrumentation to determine flow through the particulate filters, methanol impingers and formaldehyde impingers. These instruments shall receive initial and periodic calibrations as follows:

(1)(i) Install a calibration device in series with the instrument. A critical flow orifice, a bellmouth nozzle, a laminar flow element or an NBS traceable flow calibration device is required as the standard device.

(ii) The flow system should be checked for leaks between the calibration and sampling meters, including any pumps that may be part of the system, using good engineering practice.

(2) Flow air through the calibration system at the sample flow rate used for particulate, methanol, and formaldehyde testing and at the backpressure which occurs during the test.

(3) When the temperature and pressure in the system have stabilized, measure the indicated gas volume over a time period of at least five minutes or until a gas volume of at least ±1 percent accuracy can be determined by the standard device. Record the stabilized air temperature and pressure upstream of the instrument and as required for the standard device.

(4) Calculate air flow at standard conditions as measured by both the standard device and the instrument(s). (Standard conditions are defined as 68 °F (20 °C) and 29.92 in Hg (101.3 kPa).)

(5) Repeat the procedures of paragraphs (a)(2) through (4) of this section using at least two flow rates which bracket the typical operating range.

(6) If the air flow at standard conditions measured by the instrument differs by ±1.0 percent of the maximum operating range or ±2.0 percent of the point (whichever is smaller), then a correction shall be made by either of the following two methods:

(i) Mechanically adjust the instrument so that it agrees with the calibration measurement at the specified flow rates using the criteria of paragraph (a)(6) of this section; or

(ii) Develop a continuous best fit calibration curve for the instrument (as a function of the calibration device flow measurement) from the calibration points to determine corrected flow. The points on the calibration curve relative to the calibration device measurements must be within ±1.0 percent of the maximum operating range of ±2.0 percent of the point (whichever is smaller).

(b) Other systems. A bell prover may be used to calibrate the instrument if the procedure outlined in ANSI B109.1–1973 is used. Prior approval by the Administrator is not required to use the bell prover.

[60 FR 34344, June 30, 1995]

§ 86.121–82 Hydrocarbon analyzer calibration.

The hydrocarbon analyzers shall receive the following initial and periodic calibration. The HFID shall be operated at a temperature of 375±10 °F (191±6 °C).

(a) *Initial and periodic optimization of FID and HFID response.* Prior to its introduction into service and at least annually thereafter, the FID and HFID hydrocarbon analyzers shall be adjusted for optimum hydrocarbon response. Alternate methods yielding equivalent results may be used, if approved in advance by the Administrator.

(1) Follow the manufacturer's instructions or good engineering practice for instrument startup and basic operating adjustment using the appropriate fuel and zero-grade air.

(2) Optimize on the most common operating range. Introduce into the analyzer a propane in air mixture with a propane concentration equal to approximately 90 percent of the most common operating range.

(3) One of the following is required for FID or HFID optimization:

(i) For all FIDs and HFIDs, the procedures specified by the applicable FID or HFID manufacturer.

(ii) For Beckman 400 FIDs only, implementation of the recommendations outlined in Society of Automotive Engineers (SAE) paper No. 770141, ''Optimization of Flame Ionization Detector for Determination of Hydrocarbons in Diluted Automobile Exhaust;'' author, Glenn D. Reschke.

(iii) For HFIDs only, the following peaking procedure. (A) With the fuel and air flow rates set at the manufacturer's recommendations, determine the analyzer response from the difference between the span-gas response and the zero gas response. Incrementally adjust the fuel flow above and below the manufacturer's specification. Record the span and zero response at these fuel flows. A plot of the difference between the span and zero response versus the fuel flow will be similar to the one shown in Fig. B87–11. Adjust the fuel-flow rate to the highest setting that produces the maximum analyzer response.

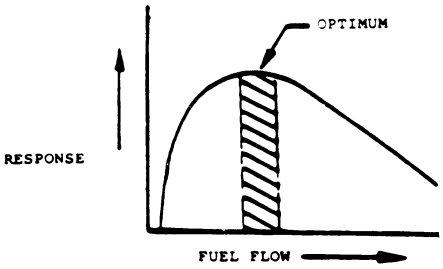

FIGURE B87-11 RESPONSE VS. FUEL FLOW

(B) To determine the optimum air flow, use the fuel flow setting determined in paragraph (a)(3)(iii)(A) of this section and vary air flow.

(iv) Alternative procedures may be used if approved in advance by the Administrator.

(4) After the optimum flow rates have been determined, record them for future reference.

(b) *Initial and periodic calibration.* Prior to its introduction into service and monthly thereafter the FID or HFID hydrocarbon analyzers shall be calibrated on all normally used instrument ranges. Use the same flow rate as when analyzing samples.

(1) Adjust analyzer to optimize performance.

(2) Zero the hydrocarbon analyzer with zero-grade air.

(3) Calibrate on each normally used operating range with propane in air calibration gases having nominal concentrations of 15, 30, 45, 60, 75, and 90 percent of that range. For each range calibrated, if the deviation from a least squares best-fit straight line is 2 percent or less of the value at each data point, concentration values may be calculated by use of a single calibration factor for that range. If the deviation exceeds 2 percent at any point, the best-fit non-linear equation which represents the data to within 2 percent of each test point shall be used to determine concentration.

[45 FR 14516, Mar. 5, 1980, as amended at 54 FR 2122, Jan. 19, 1989]

§ 86.121–90 Hydrocarbon analyzer calibration.

The hydrocarbon analyzers shall receive the following initial and periodic calibration. The HFID used with petroleum-fueled diesel vehicles shall be operated at a temperature of 375 °F±10 °F (191 °±6 °C). The HFID used with methanol-fueled vehicles shall be operated at 235 °±15 °F (113±8 °C).

(a) *Initial and periodic optimization of detector response.* Prior to its introduction into service and at least annually thereafter, the FID and HFID hydrocarbon analyzers shall be adjusted for optimum hydrocarbon response. Alternate methods yielding equivalent results may be used, if approved in advance by the Administrator.

(1) Follow the manufacturer's instructions or good engineering practice for instrument startup and basic operating adjustment using the appropriate FID fuel and zero-grade air.

(2) Optimize on the most common operating range. Introduce into the analyzer a propane (methane as appropriate) in air mixture (methanol in air mixture for methanol-fueled vehicles when optional methanol calibrated HFID procedure is used during the 1994 model year) with a propane (or methane or methanol as appropriate) concentration equal to approximately 90 percent of the most common operating range.

(3) One of the following is required for FID or HFID optimization:

(i) For all FIDs and HFIDs, the procedures specified by the applicable FID or HFID manufacturer.

(ii) For Beckman 400 FIDs only, implementation of the recommendations outlined in Society of Automotive Engineers (SAE) paper No. 770141, ''Optimization of Flame Ionization Detector for Determination of Hydrocarbons in Diluted Automobile Exhaust''; author, Glenn D. Reschke.

(iii) For HFIDs only, the following peaking procedure. (A) With the fuel and air flow rates set in the manufacturer's recommendations, determine the analyzer response from the difference between the span-gas response and the zero gas response. Incrementally adjust the fuel flow above and below the manufacturer's specification. Record the span and zero response at these fuel flows. A plot of the difference between the span and zero response versus the fuel flow will be similar to the one shown in Fig. B87–11. Adjust the fuel-flow rate to the highest setting that produces the maximum analyzer response.

(B) To determine the optimum air flow, use the fuel flow setting determined in paragraph (a)(3)(iii)(A) of this section and vary air flow.

(iv) Alternative procedures may be used if approved in advance by the Administrator.

(4) To determine the optimum air flow, use the FID fuel flow setting determined above and vary air flow.

(5) After the optimum flow rates have been determined, record them for future reference.

(b) *Initial and periodic calibration.* Prior to its introduction into service and monthly thereafter the FID or HFID hydrocarbon analyzers shall be calibrated on all normally used instrument ranges, and, if testing methanol vehicles under the procedure described in § 86.107–90(a)(2)(ii) or § 86.110–90(a)(4), the methanol response factor shall be determined (paragraph (c) of this section). Use the same flow rate as when analyzing sample.

(1) Adjust analyzer to optimize performance.

(2) Zero the hydrocarbon analyzer with zero-grade air.

(3) Calibrate on each normally used operating range with propane in air

calibration gases (either methanol or methane in air as appropriate) having nominal concentrations of 15, 30, 45, 60, 75 and 90 percent of that range. For each range calibrated, if the deviation from a least squares best-fit straight line is two percent or less of the value at each data point, concentration values may be calculated by use of a single calibration factor for that range. If the deviation exceeds two percent at any point, the best-fit non-linear equation which represents the data to within two percent of each test point shall be used to determine concentration.

(c) *FID response factor to methanol.* When the FID analyzer is to be used for the analysis of hydrocarbon samples containing methanol, the methanol response factor of the analyzer shall be established. The methanol response factor shall be determined at several concentrations in the range of concentrations in the exhaust sample, using either bag samples or gas bottles meeting the requirements of § 86.114.

(1) The bag sample of methanol for analysis in the FID, if used, shall be prepared using the apparatus shown in Figure B90–11. A known volume of methanol is injected, using a microliter syringe, into the heated mixing zone (250 °F (121 °C)) of the apparatus. The methanol is vaporized and swept into the sample bag with a known volume of zero grade air measured by a gas flow meter meeting the performance requirements of § 86.120.

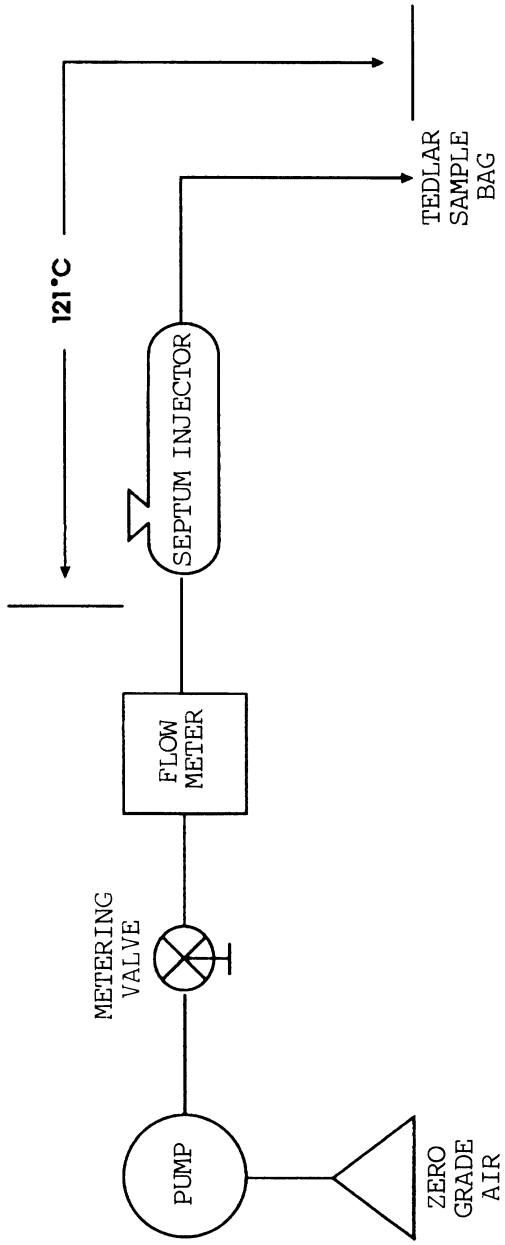

FIGURE B90-11 APPARATUS FOR PREPARATION OF FID METHANOL RESPONSE CALIBRATION MIX

(2) The bag sample is analyzed using the FID.

(3) The FID response factor, r, is calculated as follows:

r = FIDppm/SAMppm

Where:

(i) r = FID response factor.

(ii) FIDppm = FID reading in ppmC.

(iii) SAMppm=methanol concentration in the sample bag, or gas bottle, in ppmC. SAMppm for sample bags

$$= \frac{0.02406 \times \text{Fuel injected} \times \text{Fuel density}}{\text{Air volume} \times \text{Mol. Wt. } CH_3OH}$$

Where:

(iv) 0.02406 = Volume of one mole at 29.92 in. Hg and 68 °F, m^3.

(v) Fuel injected = Volume of methanol injected, ml.

(vi) Fuel density = Density of methanol, 0.7914 g/ml.

(vii) Air volume = Volume of zero grade air, m^3.

(viii) Mol. Wt. CH_3OH = 32.04.

(d) *FID response factor to methane.* When the FID analyzer is to be used for the analysis of gasoline, diesel, methanol, ethanol, liquefied petroleum gas, and natural gas-fueled vehicle hydrocarbon samples, the methane response factor of the analyzer must be established. To determine the total hydrocarbon FID response to methane, known methane in air concentrations traceable to the National Institute of Standards and Technology (NIST) must be analyzed by the FID. Several methane concentrations must be analyzed by the FID in the range of concentrations in the exhaust sample. The total hydrocarbon FID response to methane is calculated as follows:

r_{CH4}=FIDppm/SAMppm

Where:

(1) r_{CH4}=FID response factor to methane.

(2) FIDppm=FID reading in ppmC.

(3) SAMppm=the known methane concentration in ppmC.

[54 FR 14525, Apr. 11, 1989, as amended at 59 FR 48508, Sept. 21, 1994; 60 FR 34345, June 30, 1995; 70 FR 40433, July 13, 2005]

§ 86.122–78 Carbon monoxide analyzer calibration.

The NDIR carbon monoxide analyzer shall receive the following initial and periodic calibrations:

(a) *Initial and periodic interference check.* Prior to its introduction into service and annually thereafter the NDIR carbon monoxide analyzer shall be checked for response to water vapor and CO_2:

(1) Follow the manufacturer's instructions for instrument startup and operation. Adjust the analyzer to optimize performance on the most sensitive range to be used.

(2) Zero the carbon monoxide analyzer with either zero-grade air or zero-grade nitrogen.

(3) Bubble a mixture of 3 percent CO_2 in N_2 through water at room temperature and record analyzer response.

(4) An analyzer response of more than 1 percent of full scale for ranges above 300 ppm full scale or of more than 3 ppm on ranges below 300 ppm full scale will require corrective action. (Use of conditioning columns is one form of corrective action which may be taken.)

(b) *Initial and periodic calibration.* Prior to its introduction into service and monthly thereafter the NDIR carbon monoxide analyzer shall be calibrated.

(1) Adjust the analyzer to optimize performance.

(2) Zero the carbon monoxide analyzer with either zero-grade air or zero-grade nitrogen.

(3) Calibrate on each normally used operating range with carbon monoxide in N_2 calibration gases having nominal concentrations of 15, 30, 45, 60, 75, and 90 percent of that range. Additional calibration points may be generated. For each range calibrated, if the deviation from a least-squares best-fit straight line is 2 percent or less of the value at each data point, concentration values may be calculated by use of a single calibration factor for that range. If the deviation exceeds 2 percent at any point, the best-fit non-linear equation which represents the data to within 2 percent of each test point shall be used to determine concentration.

§ 86.123–78 Oxides of nitrogen analyzer calibration.

The chemiluminescent oxides of nitrogen analyzer shall receive the following initial and periodic calibration.

(a) Prior to introduction into service and at least monthly thereafter the chemiluminescent oxides of nitrogen analyzer must be checked for NO_2 to NO converter efficiency. Figure B78–9

is a reference for paragraphs (a) (1) through (11) of this section.

(1) Follow the manufacturer's instructions for instrument startup and operation. Adjust the analyzer to optimize performance.

(2) Zero the oxides of nitrogen analyzer with zero-grade air or zero-grade nitrogen.

(3) Connect the outlet of the NO_X generator to the sample inlet of the oxides of nitrogen analyzer which has been set to the most common operating range.

(4) Introduce into the NO_X generator analyzer-system an NO in nitrogen (N_2) mixture with an NO concentration equal to approximately 80 percent of the most common operating range. The NO_2 content of the gas mixture shall be less than 5 percent of the NO concentration.

(5) With the oxides of nitrogen analyzer in the NO mode, record the concentration of NO indicated by the analyzer.

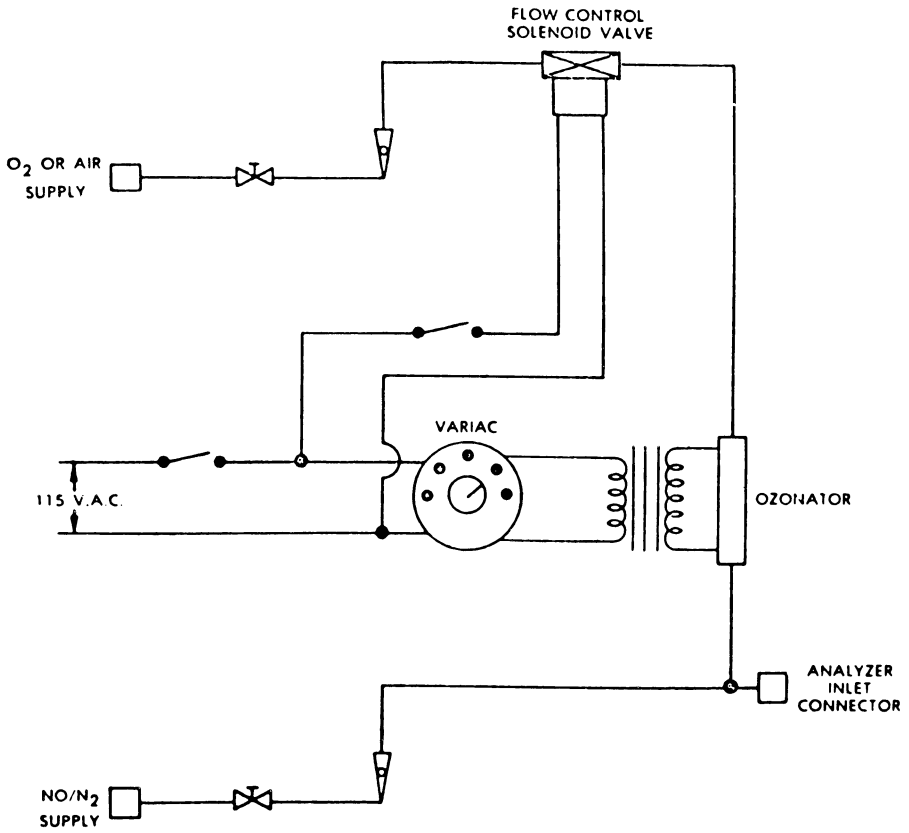

(SEE FIG B78-3 FOR SYMBOL LEGEND)

FIGURE B78-9—NOx CONVERTER EFFICIENCY DETECTOR

(6) Turn on the NO_X generator O_2 (or air) supply and adjust the O_2 (or air) flow rate so that the NO indicated by the analyzer is about 10 percent less than indicated in step (5). Record the concentration of NO in this NO + O_2 mixture.

(7) Switch the NO_X generator to the generation mode and adjust the generation rate so that the NO measured on the analyzer is 20 percent of that measured in step (5). There must be at least 10 percent unreacted NO at this point. Record the concentration of residual NO.

(8) Switch the oxides of nitrogen analyzer to the NO_X mode and measure total NO_X. Record this value.

(9) Switch off the NO_X generation but maintain gas flow through the system. The oxides of nitrogen analyzer will indicate the NO_X in the NO + O_2 mixture. Record this value.

(10) Turn off the NO_X generator O_2 (or air) supply. The analyzer will now indicate the NO_X in the original NO in N_2

mixture. This value should be no more than 5 percent above the value indicated in step (4).

(11) Calculate the efficiency of the NO_X converted by substituting the concentrations obtained into the following equation:

$$\text{Percent Efficiency} = [1 + (a - b)/(c - d)] \times 100$$

where:
a = concentration obtained in step (8).
b = concentration obtained in step (9).
c = concentration obtained in step (6).
d = concentration obtained in step (7).

If converter efficiency is not greater than 90 percent corrective action will be required.

(b) *Initial and periodic calibration.* Prior to its introduction into service and monthly thereafter the chemiluminescent oxides of nitrogen analyzer shall be calibrated on all normally used instrument ranges. Use the same flow rate as when analyzing samples. Proceed as follows:

(1) Adjust analyzer to optimize performance.

(2) Zero the oxides of nitrogen analyzer with zero-grade air or zero-grade nitrogen.

(3) Calibrate on each normally used operating range with NO in N2 calibration gases having nominal concentrations of 15, 30, 45, 60, 75, and 90 percent of that range. For each range calibrated, if the deviation from a least-squares best-fit straight line is 2 percent or less of the value at each data point, concentration values may be calculated by use of a single calibration factor for that range. If the deviation exceeds 2 percent at any point, the best-fit non-linear equation which represents the data to within 2 percent of each test point shall be used to determine concentration.

(c) When testing methanol-fueled vehicles, it may be necessary to clean the analyzer frequently to prevent interference with NO_X measurements (see EPA/600/S3–88/040).

[42 FR 32954, June 28, 1977, as amended at 42 FR 45652, Sept. 12, 1977; 52 FR 47869, Dec. 16, 1987; 58 FR 58422, Nov. 1, 1993; 60 FR 34347, June 30, 1995]

§ 86.124–78 Carbon dioxide analyzer calibration.

Prior to its introduction into service and monthly thereafter the NDIR carbon dioxide analyzer shall be calibrated:

(a) Follow the manufacturer's instructions for instrument startup and operation. Adjust the analyzer to optimize performance.

(b) Zero the carbon dioxide analyzer with either zero-grade air or zero-grade nitrogen.

(c) Calibrate on each normally used operating range with carbon dioxide in N_2 calibration gases with nominal concentrations of 15, 30, 45, 60, 75, and 90 percent of that range. Additional calibration points may be generated. For each range calibrated, if the deviation from a least-squares best-fit straight line is 2 percent or less of the value at each data point, concentration values may be calculated by use of a single calibration factor for that range. If the deviation exceeds 2 percent at any point, the best-fit non-linear equation which represents the data to within 2 percent of each test point shall be used to determine concentration.

§ 86.125–94 Methane analyzer calibration.

Prior to introduction into service and monthly thereafter, the methane analyzer shall be calibrated:

(a) Follow the manufacturer's instructions for instrument startup and operation. Adjust the analyzer to optimize performance.

(b) Zero the methane analyzer with zero-grade air.

(c) Calibrate on each normally used operating range with CH_4 in air with nominal concentrations of 15, 30, 45, 60, 75, and 90 percent of that range. Additional calibration points may be generated. For each range calibrated, if the deviation from a least-squares best-fit straight line is 2 percent or less of the value at each data point, concentration values may be calculated by use of a single calibration factor for that range. If the deviation exceeds 2 percent at any point, the best-fit non-linear equation which represents the data to within 2 percent of each test

point shall be used to determine concentration.

[56 FR 25774, June 5, 1991]

§ 86.126–90 Calibration of other equipment.

Other test equipment used for testing shall be calibrated as often as required by the manufacturer or as necessary according to good practice. Specific equipment requiring calibration are the gas chromatograph and flame ionization detector used in measuring methanol and the high pressure liquid chromatograph (HPLC) and ultraviolet detector for measuring formaldehyde.

[54 FR 14527, Apr. 11, 1989]

§ 86.127–00 Test procedures; overview.

Applicability. The procedures described in this and subsequent sections are used to determine the conformity of vehicles with the standards set forth in subpart A or S of this part (as applicable) for light-duty vehicles and light-duty trucks. Except where noted, the procedures of paragraphs (a) through (b) of this section, § 86.127–96 (c) and (d), and the contents of §§ 86.135–94, 86.136–90, 86.137–96, 86.140–94, 86.142–90, and 86.144–94 are applicable for determining emission results for vehicle exhaust emission systems designed to comply with the FTP emission standards, or the FTP emission element required for determining compliance with composite SFTP standards. Paragraphs (f) and (g) of this section discuss the additional test elements of aggressive driving (US06) and air conditioning (SC03) that comprise the exhaust emission components of the SFTP. Section 86.127–96(e) discusses fuel spitback emissions and paragraphs (h) and (i) of this section are applicable to all vehicle emission test procedures. Section 86.127–00 includes text that specifies requirements that differ from § 86.127–96. Where a paragraph in § 86.127–96 is identical and applicable to § 86.127–00, this may be indicated by specifying the corresponding paragraph and the statement ''[Reserved]. For guidance see § 86.127-96.''

(a) The overall test consists of prescribed sequences of fueling, parking, and operating test conditions. Vehicles are tested for any or all of the following emissions:

(1) Gaseous exhaust THC, CO, NO_X. CO_2 (for petroleum-fueled and gaseous-fueled vehicles), plus CH_3OH and HCHO for methanol-fueled vehicles, plus CH_4 (for vehicles subject to the NMHC and NMHCE standards).

(2) Particulates.

(3) Evaporative HC (for gasoline-fueled, methanol-fueled and gaseous-fueled vehicles) and CH_3OH (for methanol-fueled vehicles). The evaporative testing portion of the procedure occurs after the exhaust emission test; however, exhaust emissions need not be sampled to complete a test for evaporative emissions.

(4) Fuel spitback (this test is not required for gaseous-fueled vehicles).

(b) The FTP Otto-cycle exhaust emission test is designed to determine gaseous THC, CO, CO_2, CH_4, NO_X, and particulate mass emissions from gasoline-fueled, methanol-fueled and gaseous-fueled Otto-cycle vehicles as well as methanol and formaldehyde from methanol-fueled Otto-cycle vehicles, while simulating an average trip in an urban area of 11 miles (18 kilometers). The test consists of engine start-ups and vehicle operation on a chassis dynamometer through a specified driving schedule (see paragraph (a), EPA Urban Dynamometer Driving Schedule, of appendix I to this part). A proportional part of the diluted exhaust is collected continuously for subsequent analysis, using a constant volume (variable dilution) sampler or critical flow venturi sampler.

(c)–(e) [Reserved]. For guidance see § 86.127–96.

(f) The element of the SFTP for exhaust emissions related to aggressive driving (US06) is designed to determine gaseous THC, NMHC, CO, CO_2, CH_4, and NO_X emissions from gasoline-fueled or diesel-fueled vehicles (see § 86.158–00 Supplemental test procedures; overview, and § 86.159–00 Exhaust emission test procedures for US06 emissions). The test cycle simulates urban driving speeds and accelerations that are not represented by the FTP Urban Dynamometer Driving Schedule simulated trips discussed in paragraph (b) of this section. The test consists of vehicle operation on a chassis dynamometer

through a specified driving cycle (see paragraph (g), US06 Dynamometer Driving Schedule, of appendix I to this part). A proportional part of the diluted exhaust is collected continuously for subsequent analysis, using a constant volume (variable dilution) sampler or critical flow venturi sampler.

(g)(1) The element of the SFTP related to the increased exhaust emissions caused by air conditioning operation (SC03) is designed to determine gaseous THC, NMHC, CO, CO_2, CH_4, and NO_X emissions from gasoline-fueled or diesel fueled vehicles related to air conditioning use (see § 86.158–00 Supplemental federal test procedures; overview and § 86.160–00 Exhaust emission test procedure for SC03 emissions). The test cycle simulates urban driving behavior with the air conditioner operating. The test consists of engine startups and vehicle operation on a chassis dynamometer through specified driving cycles (see paragraph (h), SC03 Dynamometer Driving Schedule, of appendix I to this part). A proportional part of the diluted exhaust is collected continuously for subsequent analysis, using a constant volume (variable dilution) sampler or critical flow venturi sampler. The testing sequence includes an approved preconditioning cycle, a 10 minute soak with the engine turned off, and the SC03 cycle with measured exhaust emissions.

(2) The SC03 air conditioning test is conducted with the air conditioner operating at specified settings and the ambient test conditions of:

(i) Air temperature of 95 °F;

(ii) 100 grains of water/pound of dry air (approximately 40 percent relative humidity);

(iii) Simulated solar heat intensity of 850 W/m^2 (see § 86.161–00(d)); and

(iv) air flow directed at the vehicle that will provide representative air conditioner system condenser cooling at all vehicle speeds (see § 86.161–00(e)).

(3) Manufacturers have the option of simulating air conditioning operation during testing at other ambient test conditions provided they can demonstrate that the vehicle tail pipe exhaust emissions are representative of the emissions that would result from the SC03 cycle test procedure and the ambient conditions of paragraph (g)(2) of this section. The Administrator has approved two optional air conditioning test simulation procedures AC1 and AC2 (see § 86.162–00) for only the model years of 2000 through 2002. If a manufacturer desires to conduct simulation SC03 testing for model year 2003 and beyond, the simulation test procedure must be approved in advance by the Administrator (see §§ 86.162–00 and 86.163–00).

(h) Except in cases of component malfunction or failure, all emission control systems installed on or incorporated in a new motor vehicle shall be functioning during all procedures in this subpart. Maintenance to correct component malfunction or failure shall be authorized in accordance with § 86.098–25 or § 86.1834–01 as applicable.

(i) Background concentrations are measured for all species for which emissions measurements are made. For exhaust testing, this requires sampling and analysis of the dilution air. For evaporative testing, this requires measuring initial concentrations. (When testing methanol-fueled vehicles, manufacturers may choose not to measure background concentrations of methanol and/or formaldehyde, and then assume that the concentrations are zero during calculations.)

[61 FR 54891, Oct. 22, 1996, as amended at 64 FR 23921, May 4, 1999]

§ 86.127–90 Test procedures; overview.

The procedures described in this and subsequent sections are used to determine the conformity of vehicles with the standards set forth in subpart A for light-duty vehicles and light-duty trucks.

(a) The overall test consists of prescribed sequences of fueling, parking and operating conditions. Vehicles are tested for any or all of the following emissions:

(1) Gaseous exhaust HC, CO, NO_X. CO_2 (for petroleum-fueled vehicles), plus CH_3OH and HCHO for methanol-fueled vehicles (measurement of CH_3OH and HCHO may be omitted for 1990 through 1994 model year methanol-fueled vehicles provided a HFID calibrated on methanol is used for measuring HC plus CH_3OH).

(2) Particulates (diesel vehicles).

(3) Evaporative HC (for gasoline-fueled and methanol-fueled vehicles) and CH_3OH (for methanol-fueled vehicles). A separate CH_3OH measurement may be omitted for 1990 through 1994 model year methanol-fueled vehicles provided a HFID calibrated on methanol is used for measuring HC plus CH_3OH.

The evaporative portion of the test procedure occurs before and after the exhaust emission test, and in some cases, during the exhaust emission test.

(b) The Otto-cycle exhaust emission test is designed to determine gaseous hydrocarbon, carbon monoxide, carbon dioxide, and oxides of nitrogen mass emissions from gasoline-fueled and methanol-fueled vehicles as well as methanol and formaldehyde from methanol-fueled Otto-cycle vehicles while simulating an average trip in an urban area of 7.5 miles (12.1 kilometers). The test consists of engine startups and vehicle operation on a chassis dynamometer, through a specified driving schedule. A proportional part of the diluted exhaust is collected continuously for subsequent analysis, using a constant volume (variable dilution) sampler or critical flow venturi sampler.

(c) The diesel exhaust emission test is designed to determine particulate and gaseous mass emissions during a test similar to the test in § 86.127(b). For petroleum-fueled vehicles, diluted exhaust is continuously analyzed for total hydrocarbons using a heated sample line and analyzer. The other gaseous emissions, CO, CO_2 and NO_X are collected continuously for analysis as in § 86.127(b). For methanol-fueled vehicles, hydrocarbons, methanol, formaldehyde, CO, CO_2, and NO_X are collected continuously for analysis as in § 86.127(b). Hydrocarbons, methanol and formaldehyde are collected using heated sample lines, and a heated FID is used for hydrocarbons analyses. Simultaneous with the gaseous exhaust collection and analysis, particulates from a proportional part of the diluted exhaust are collected continuously on a filter. The mass of particulate is determined by the procedure described in § 86.139. This testing requires a dilution tunnel as well as the constant volume sampler.

(d) The evaporative emission test (gasoline-fueled vehicles and methanol-fueled vehicles) is designed to determine hydrocarbon and methanol evaporative emissions as a consequence of diurnal temperature fluctuation, urban driving, and hot soaks during parking. It is associated with a series of events representative of a motor vehicle's operation, which result in hydrocarbon and/or methanol vapor losses. The test procedure is designed to measure:

(1) Diurnal breathing losses resulting from daily temperature changes, measured by the enclosure technique;

(2) Running losses from suspected sources (if indicated by engineering analysis or vehicle inspection) resulting from a simulated trip on a chassis dynamometer, measured by carbon traps; and

(3) Hot soak losses, which result when the vehicle is parked and the hot engine is turned off, measured by the enclosure technique.

(e) Except in cases of component malfunction or failure, all emission control systems installed on or incorporated in a new motor vehicle shall be functioning during all procedures in this subpart. Maintenance to correct component malfunction or failure shall be authorized in accordance with § 86.088–25.

[54 FR 14527, Apr. 11, 1989]

§ 86.127–94 Test procedures; overview.

The procedures described in this and subsequent sections are used to determine the conformity of vehicles with the standards set forth in subpart A of this part for light-duty vehicles and light-duty trucks.

(a) The overall test consists of prescribed sequences of fueling, parking, and operating conditions. Vehicles are tested for any or all of the following emissions:

(1) Gaseous exhaust THC, CO, NO_X. CO_2 (for petroleum-fueled vehicles), plus CH_3OH and HCHO for methanol-fueled vehicles, plus CH_4 (for vehicles subject to the NMHC and NMHCE standards). (Measurement of CH_3OH and HCHO may be omitted for 1990 through 1994 model year methanol-

fueled vehicles provided a HFID calibrated on methanol is used for measuring THC plus CH_3OH.)

(2) Particulates.

(3) Evaporative HC (for gasoline-fueled and methanol-fueled vehicles) and CH_3OH (for methanol-fueled vehicles). A separate CH_3OH measurement may be omitted for 1990 through 1994 model year methanol-fueled vehicles provided a HFID calibrated on methanol is used for measuring HC plus CH_3OH.

(b) The Otto-cycle exhaust emission test is designed to determine gaseous THC, CO, CO_2, CH_4, NO_X, and particulate mass emissions from gasoline-fueled and methanol-fueled Otto-cycle vehicles as well as methanol and formaldehyde from methanol-fueled Otto-cycle vehicles, while simulating an average trip in an urban area of 7.5 miles (12.1 kilometers). The test consists of engine startups and vehicle operation on a chassis dynamometer, through a specified driving schedule. A proportional part of the diluted exhaust is collected continuously for subsequent analysis, using a constant volume (variable dilution) sampler or critical flow venturi sampler.

(c) The diesel-cycle exhaust emission test is designed to determine particulate and gaseous mass emissions during a test similar to the test in § 86.127(b). For petroleum-fueled diesel-cycle vehicles, diluted exhaust is continuously analyzed for THC using a heated sample line and analyzer; the other gaseous emissions (CH_4, CO, CO_2, and NO_X) are collected continuously for analysis as in § 86.127(b). For methanol-fueled vehicles, THC, methanol, formaldehyde, CO, CO_2, CH_4, and NO_X are collected continuously for analysis as in § 86.127(b). THC, methanol, and formaldehyde are collected using heated sample lines, and a heated FID is used for THC analyses. Simultaneous with the gaseous exhaust collection and analysis, particulates from a proportional part of the diluted exhaust are collected continuously on a filter. The mass of particulate is determined by the procedure described in § 86.139. This testing requires a dilution tunnel as well as the constant volume sampler.

(d) The evaporative emission test (gasoline-fueled vehicles and methanol-fueled vehicles) is designed to determine hydrocarbon and methanol evaporative emissions as a consequence of diurnal temperature fluctuation, urban driving, and hot soaks during parking. It is associated with a series of events representative of a motor vehicle's operation, which result in hydrocarbon and/or methanol vapor losses. The test procedure is designed to measure:

(1) Diurnal breathing losses resulting from daily temperature changes, measured by the enclosure technique;

(2) Running losses from suspected sources (if indicated by engineering analysis or vehicle inspection) resulting from a simulated trip on a chassis dynamometer, measured by carbon traps; and

(3) Hot soak losses, which result when the vehicle is parked and the hot engine is turned off, measured by the enclosure technique.

(e) Except in cases of component malfunction or failure, all emission control systems installed on or incorporated in a new motor vehicle shall be functioning during all procedures in this subpart. Maintenance to correct component malfunction or failure shall be authorized in accordance with § 86.090–25.

(f) Background concentrations are measured for all species for which emissions measurements are made. For exhaust testing, this requires sampling and analysis of the dilution air. For evaporative testing, this requires measuring initial concentrations. (When testing methanol-fueled vehicles, manufacturers may choose not to measure background concentrations of methanol and/or formaldehyde, and then assume that the concentrations are zero during calculations.)

[56 FR 25774, June 5, 1991, as amended at 60 FR 34347, June 30, 1995]

§ 86.127–96 Test procedures; overview.

The procedures described in this and subsequent sections are used to determine the conformity of vehicles with the standards set forth in subpart A of this part for light-duty vehicles and light-duty trucks.

(a) The overall test consists of prescribed sequences of fueling, parking, and operating conditions. Vehicles are

tested for any or all of the following emissions:

(1) Gaseous exhaust THC, CO, NO_X. CO_2 (for petroleum-fueled and gaseous-fueled vehicles), plus CH_3OH and HCHO for methanol-fueled vehicles, plus CH_4 (for vehicles subject to the NMHC and NMHCE standards).

(2) Particulates.

(3) Evaporative HC (for gasoline-fueled, methanol-fueled and gaseous-fueled vehicles) and CH_3OH (for methanol-fueled vehicles). The evaporative testing portion of the procedure occurs after the exhaust emission test; however, exhaust emissions need not be sampled to complete a test for evaporative emissions.

(4) Fuel spitback (this test is not required for gaseous-fueled vehicles).

(b) The Otto-cycle exhaust emission test is designed to determine gaseous THC, CO, CO_2, CH_4, NO_X, and particulate mass emissions from gasoline-fueled, methanol-fueled and gaseous-fueled Otto-cycle vehicles as well as methanol and formaldehyde from methanol-fueled Otto-cycle vehicles, while simulating an average trip in an urban area of 11 miles (18 kilometers). The test consists of engine start-ups and vehicle operation on a chassis dynamometer through a specified driving schedule. A proportional part of the diluted exhaust is collected continuously for subsequent analysis, using a constant volume (variable dilution) sampler or critical flow venturi sampler.

(c) The diesel-cycle exhaust emission test is designed to determine particulate and gaseous mass emissions during a test similar to the test in § 86.127(b). For petroleum-fueled diesel-cycle vehicles, diluted exhaust is continuously analyzed for THC using a heated sample line and analyzer; the other gaseous emissions (CH_4, CO, CO_2, and NO_X) are collected continuously for analysis as in § 86.127(b). For methanol-fueled vehicles, THC, methanol, formaldehyde, CO, CO_2, CH_4, and NO_X are collected continuously for analysis as in § 86.127(b). THC, methanol, and formaldehyde are collected using heated sample lines, and a heated FID is used for THC analyses. Simultaneous with the gaseous exhaust collection and analysis, particulates from a proportional part of the diluted exhaust are collected continuously on a filter. The mass of particulate is determined by the procedure described in § 86.139. This testing requires a dilution tunnel as well as the constant volume sampler.

(d) The evaporative emission test (gasoline-fueled vehicles, methanol-fueled and gaseous-fueled vehicles) is designed to determine hydrocarbon and methanol evaporative emissions as a consequence of diurnal temperature fluctuation, urban driving and hot soaks following drives. It is associated with a series of events that a vehicle may experience and that may result in hydrocarbon and/or methanol vapor losses. The test procedure is designed to measure:

(1) Diurnal emissions resulting from daily temperature changes (as well as relatively constant resting losses), measured by the enclosure technique (see § 86.133);

(2) Running losses resulting from a simulated trip performed on a chassis dynamometer, measured by the enclosure or point-source technique (see § 86.134; this test is not required for gaseous-fueled vehicles); and

(3) Hot soak emissions, which result when the vehicle is parked and the hot engine is turned off, measured by the enclosure technique (see § 86.138).

(e) Fuel spitback emissions occur when a vehicle's fuel fill neck cannot accommodate dispensing rates. The vehicle test for spitback consists of a short drive followed immediately by a complete refueling event. This test is not required for gaseous-fueled vehicles.

(f) Except in cases of component malfunction or failure, all emission control systems installed on or incorporated in a new motor vehicle shall be functioning during all procedures in this subpart. Maintenance to correct component malfunction or failure shall be authorized in accordance with § 86.090–25.

(g) Background concentrations are measured for all species for which emissions measurements are made. For exhaust testing, this requires sampling and analysis of the dilution air. For evaporative testing, this requires measuring initial concentrations. (When testing methanol-fueled vehicles, manufacturers may choose not to

measure background concentrations of methanol and/or formaldehyde, and then assume that the concentrations are zero during calculations.)

[58 FR 16032, Mar. 24, 1993, as amended at 59 FR 48508, Sept. 21, 1994; 60 FR 34347, June 30, 1995]

§ 86.128–00 Transmissions.

Section 86.128–00 includes text that specifies requirements that differ from § 86.128–79. Where a paragraph in § 86.128–79 is identical and applicable to § 86.128–00, this may be indicated by specifying the corresponding paragraph and the statement ''[Reserved]. For guidance see § 86.128–79.''

(a)–(c) [Reserved]. For guidance see § 86.128–79.

(d) The vehicle shall be driven with appropriate accelerator pedal movement necessary to achieve the speed versus time relationship prescribed by the driving schedule. Both smoothing of speed variations and excessive accelerator pedal perturbations are to be avoided.

(e)–(h) [Reserved]. For guidance see § 86.128–79.

[61 FR 54892, Oct. 22, 1996]

§ 86.128–79 Transmissions.

(a) All test conditions, except as noted, shall be run according to the manufacturer's recommendations to the ultimate purchaser, *Provided*, That: Such recommendations are representative of what may reasonably be expected to be followed by the ultimate purchaser under in-use conditions.

(b) Vehicles equipped with free wheeling or overdrive, except as noted, shall be tested with these features operated according to the manufacturer's recommendations to the ultimate purchaser.

(c) Idle modes less than one minute in length shall be run with automatic transmissions in ''Drive'' and the wheels braked; manual transmissions shall be in gear with the clutch disengaged, except for the first idle mode (see §§ 86.134, 86.136, and 86.137). The first idle mode and idle modes longer than one minute in length may be run with automatic transmissions in ''Neutral;'' manual transmissions may be in ''Neutral'' with the clutch engaged (clutch may be disengaged for engine start-up). If an automatic transmission is in ''Neutral'' during an idle mode, it shall be placed in ''Drive'' with the wheels braked at least 5 seconds before the end of the idle mode. If a manual transmission is in ''Neutral'' during an idle mode, it shall be placed in gear with the clutch disengaged at least 5 seconds before the end of the idle mode.

(d) The vehicle shall be driven with minimum accelerator pedal movement to maintain the desired speed.

(e) Accelerations shall be driven smoothly following representative shift speeds and procedures. For manual transmissions, the operator shall release the accelerator pedal during each shift and accomplish the shift with minimum time. If the vehicle cannot accelerate at the specified rate, the vehicle shall be operated at maximum available power until the vehicle speed reaches the value prescribed for that time in the driving schedule.

(f) The deceleration modes shall be run in gear using brakes or accelerator pedal as necessary to maintain the desired speed. Manual transmission vehicles shall have the clutch engaged and shall not change gears from the previous mode. For those modes which decelerate to zero, manual transmission clutches shall be depressed when the speed drops below 15 mph (24.1 km/h), when engine roughness is evident, or when engine stalling is imminent.

(g)(1) In the case of test vehicles equipped with manual transmissions, the transmission shall be shifted in accordance with procedures which are representative of shift patterns that may reasonably be expected to be followed by vehicles in use, in terms of such variables as vehicle speed or percent rated engine speed. At the Administrator's discretion, a test vehicle may also be shifted according to the shift procedures recommended by the manufacturer to the ultimate purchaser, if such procedures differ from those which are reasonably expected to be followed by vehicles in use.

(2) A manufacturer may recommend to the ultimate purchaser shift procedures other than those used in testing by the EPA, Provided that: All shift procedures (including multiple shift

speeds) which the manufacturer proposes to supply to the ultimate purchaser are provided to the Administrator as part of the manufacturer's application for certification, or as an amendment to such application, under § 86.079–32, § 86.079–33, § 86.082–34, or § 86.1844–01 as applicable.

(h) Downshifting is allowed at the beginning of or during a power mode in accordance with the shift procedure determined in paragraph (g)(1) of this section.

[43 FR 52921, Nov. 14, 1978, as amended at 58 FR 16033, Mar. 24, 1993; 64 FR 23921, May 4, 1999]

§ 86.129–00 Road load power, test weight, and inertia weight class determination.

Applicability. Section 86.129–94 (a) applies to all vehicle testing. Section 86.129–80 (b) and (c) are applicable to vehicles from engine families which are not required to meet SFTP requirements, although a manufacturer may elect to use the requirements in paragraphs (e) and (f) of this section instead of § 86.129–80 (b) and (c) on any vehicle. Section 86.129–94(d) which discusses fuel temperature profile, is applicable to evaporative emission running loss testing. Paragraphs (e) and (f) of this section are applicable to vehicles from engine families required to comply with SFTP requirements. Section 86.129–00 includes text that specifies requirements that differ from § 86.129–80 or § 86.129–94. Where a paragraph in § 86.129–80 or § 86.129–94 is identical and applicable to § 86.129–00, this may be indicated by specifying the corresponding paragraph and the statement ''[Reserved]. For guidance see § 86.129–80.'' or ''[Reserved]. For guidance see § 86.129–94.''

(a) [Reserved]. For guidance see § 86.129–94.

(b)–(c) [Reserved]. For guidance see § 86.129–80.

(d) [Reserved]. For guidance see § 86.129–94.

(e)(1) For each test vehicle from an engine family required to comply with SFTP requirements, the manufacturer shall supply representative road load forces for the vehicle at speeds between 15 km/hr (9.3 mph) and 115 km/hr (71.5 mph). The road load force shall represent vehicle operation on a smooth level road, during calm winds, with no precipitation, at an ambient temperature of 20 °C (68 °F), and atmospheric pressure of 98.21 kPa. Road load force for low speed may be extrapolated. Manufacturers may, at their option, use road load forces meeting the objectives of paragraph (f) of this section for any vehicle.

(2) The dynamometer's power absorption shall be set for each vehicle's emission test sequence such that the force imposed during dynamometer operation matches actual road load force at all speeds.

(3) The 10 percent adjustment in road load power for air conditioning discussed in § 86.129–80(b)(3), is not applicable when road load forces are determined for dynamometer testing using paragraphs (e)(1) and (e)(2) of this section.

(f)(1) Required test dynamometer inertia weight class selections for the test elements of FTP, US06, and SC03 are determined by the test vehicles test weight basis and corresponding equivalent weight as listed in the tabular information of § 86.129–94(a). With the exception of the fuel economy test weight information in footnote 4 to the table in § 86.129–94(a), none of the other footnotes to the tabular listing apply to emission tests utilizing an approved single roll dynamometer or equivalent dynamometer configuration. All light-duty vehicles and light light-duty trucks are to be tested at the inertia weight class corresponding to their equivalent test weight.

(i) For light-duty vehicles and light light-duty trucks, test weight basis is loaded vehicle weight, which is the vehicle weight plus 300 pounds.

(ii) For heavy light-duty trucks, the definition of test weight basis varies depending on the SFTP test element being tested.

(A) For the aggressive driving cycle (US06), the test weight basis is the vehicle curb weight plus 300 pounds.

(B) For the FTP and the air conditioning (SC03) element of the SFTP, the test weight is the average of the curb weight plus GVWR.

(C) Regardless of other requirements in this section relating to the testing of HLDTs, for Tier 2 HLDTs, the test

weight basis for FTP and SFTP testing (both US06 and SC03), if applicable, is the vehicle curb weight plus 300 pounds. For MDPVs certified to standards in bin 11 in Tables S04–1 and 2 in § 86.1811–04, the test weight basis must be adjusted loaded vehicle weight (ALVW) as defined in this part.

(2) Dynamic inertia load adjustments may be made to the test inertia weight during specific US06 acceleration events when wide open throttle operation is equal to or greater than eight (8) seconds (see § 86.108–00). The dynamic inertia weight adjustment procedure must be approved in advance of conducting official US06 testing. The Administrator will perform confirmatory US06 testing using the same dynamometer inertia adjustment procedures as the manufacturer if:

(i) The manufacturer submits a request to the Administrator; and

(ii) The manufacturer provides the dynamometer hardware and/or software necessary for these adjustments to the Administrator.

[61 FR 54892, Oct. 22, 1996, as amended at 65 FR 6850, Feb. 10, 2000]

EDITORIAL NOTE: At 64 FR 23921, May 4, 1999, § 86.129–00 was amended by revising footnote 4 to the table in paragraph (a) and by revising paragraph (d)(1)(iv). Since both paragraphs (a) and (d) of § 86.129–00 are reserved and contain no text, these amendments could not be made. For the convenience of the user, the revised text is set forth as follows:

§ 86.129–00 Road load power, test weight, and inertia weight class determination.

* * * * *

(a) * * *

* * * * *

[4] For model year 1994 and later heavy light-duty trucks not subject to the Tier 0 standards of § 86.094–9, test weight basis shall be adjusted loaded vehicle weight, as defined in § 86.094–2 or 86.1803–01 as applicable. For all other vehicles, test weight basis shall be loaded vehicle weight, as defined in § 86.082–2 or 86.1803–01 as applicable.

* * * * *

(d) * * *

(1) * * *

(iv) Small-volume manufacturers, as defined in § 86.094–14(b)(1) or § 86.1838–01 as applicable, may use an alternate method for generating fuel temperature profiles, subject to the approval of the Administrator.

* * * * *

§ 86.129–80 Road load power, test weight, and inertia weight class determination.

(a) Flywheels, electrical or other means of simulating test weight as shown in the following table shall be used. If the equivalent test weight specified is not available on the dynamometer being used, the next higher equivalent test weight (not to exceed 250 pounds) available shall be used.

Road load power at 50 mi/h—light-duty trucks [1,2,3]	Loaded vehicle weight (pounds)	Equivalent test weight (pounds)	Inertia weight class (pounds)
.....	Up to 1,062	1,000	1,000
.....	1,063 to 1,187 ..	1,125	1,000
.....	1,188 to 1,312 ..	1,250	1,250
.....	1,313 to 1,437 ..	1,375	1,250
.....	1,438 to 1,562 ..	1,500	1,500
.....	1,563 to 1,687 ..	1,625	1,500
.....	1,688 to 1,812 ..	1,750	1,750
.....	1,813 to 1,937 ..	1,875	1,750
.....	1,938 to 2,062 ..	2,000	2,000
.....	2,063 to 2,187 ..	2,125	2,000
.....	2,188 to 2,312 ..	2,250	2,250
.....	2,313 to 2,437 ..	2,375	2,250
.....	2,438 to 2,562 ..	2,500	2,500
.....	2,563 to 2,687 ..	2,625	2,500
.....	2,688 to 2,812 ..	2,750	2,750
.....	2,813 to 2,937 ..	2,875	2,750
.....	2,938 to 3,062 ..	3,000	3,000
.....	3,063 to 3,187 ..	3,125	3,000
.....	3,188 to 3,312 ..	3,250	3,000
.....	3,313 to 3,437 ..	3,375	3,500
.....	3,438 to 3,562 ..	3,500	3,500
.....	3,563 to 3,687 ..	3,625	3,500
.....	3,688 to 3,812 ..	3,750	3,500
.....	3,813 to 3,937 ..	3,875	4,000
.....	3,938 to 4,125 ..	4,000	4,000
.....	4,126 to 4,375 ..	4,250	4,000
.....	4,376 to 4,625 ..	4,500	4,500
.....	4,626 to 4,875 ..	4,750	4,500
.....	4,876 to 5,125 ..	5,000	5,000
.....	5,126 to 5,375 ..	5,250	5,000
.....	5,376 to 5,750 ..	5,500	5,500
.....	5,751 to 6,250 ..	[4] 6,000	6,000
.....	6,251 to 6,750 ..	6,500	6,500
.....	6,751 to 7,250 ..	7,000	7,000
.....	7,251 to 7,750 ..	7,500	7,500
.....	7,751 to 8,250 ..	8,000	8,000
.....	8,251 to 8,750 ..	8,500	8,500
.....	8,751 to 9,250 ..	9,000	9,000
.....	9,251 to 9,750 ..	9,500	9,500
.....	9,751 to 10,000	10,000	10,000

[1] For all light-duty trucks except vans, and for heavy duty vehicles optionally certified as light-duty trucks, the road load power (horsepower) at 50 mi/h shall be 0.58 times B (defined below) rounded to the nearest ½ hp.

[2] For vans, the road load power at 50 mi/h (horsepower) shall be 0.50 times B (defined below) rounded to the nearest ½ hp.

[3] B is the basic vehicle frontal area (square foot) plus the additional frontal area (square foot) of mirrors and optional equipment exceeding 0.1 ft^2 which are anticipated to be sold on more than 33 pct of the car line. Frontal area measurements shall be computed to the nearest 10th of a square foot using a method approved in advanced by the administrator.

[4] Light-duty vehicles over 5,750 lb loaded vehicle weight shall be tested at a 5,500 lb equivalent test weight.

(b) *Power absorption unit adjustment—light-duty trucks.* (1) The power absorption unit shall be adjusted to reproduce road load power at 50 mph true speed. The indicated road load power setting shall take into account the dynamometer friction. The relationship between road load (absorbed) power and indicated road load power for a particular dynamometer shall be determined by the procedure outlined in § 86.118 or other suitable means.

(2) The road load power listed in the table above shall be used or the vehicle manufacturer may determine the road load power by an alternate procedure requested by the manufacturer and approved in advance by the Administrator.

(3) Where it is expected that more than 33 percent of a car line within an engine-system combination will be equipped with air conditioning per § 86.080–24(g)(2), the road load power listed above or as determined in paragraph (b)(2) of this section shall be increased by 10 percent, up to a maximum increase of 1.4 horsepower, for testing all test vehicies representing that car line within that engine-system combination if those vehicles are intended to be offered with air conditioning in production. The above increase for air conditioning shall be added prior to rounding off as instructed by notes 2 and 3 of the table.

(c) *Power absorption unit adjustment—light-duty vehicles.* (1) The power absorption unit shall be adjusted to reproduce road load power at 50 mph true speed. The dynamometer power absorption shall take into account the dynamometer friction, as discussed in § 86.118.

(2) The dynamometer road load setting is determined from the equivalent test weight, the reference frontal area, the body shape, the vehicle protuberances, and the tire type by the following equations.

(i) For light-duty vehicles to be tested on a twin roll dynamometer.

$$Hp = aA + P + tW$$

where:

Hp = the dynamometer power absorber setting at 50 mph (horsepower).

A = the vehicle reference frontal area (ft^2). The vehicle reference frontal area is defined as the area of the orthogonal projection of the vehicle; including tires and suspension components, but excluding vehicle protuberances, onto a plane perpendicular to both the longitudinal plane of the vehicle and the surface upon which the vehicle is positioned. Measurements of this area shall be computed to the nearest tenth of a square foot using a method approved in advance by the Administrator.

P = the protuberance power correction factor from table 1 of this paragraph (horsepower).

W = vehicle equivalent test weight (lbs) from the table in paragraph (a).

a = 0.43 for fastback-shaped vehicles; = 0.50 for all other light duty vehicles.

t = 0.0 for vehicles equipped with radial ply tires; = 3×10^{-4} for all other vehicles.

A vehicle is considered to have a fastback shape if the rearward projection of that portion of the rear surface (A_b) which slopes at an angle of less than 20 degrees from the horizontal is at least 25 percent as large as the vehicle reference frontal area. In addition, this surface must be smooth, continuous, and free from any local transitions greater than four degrees. An example of a fastback shape is presented in Figure 1.

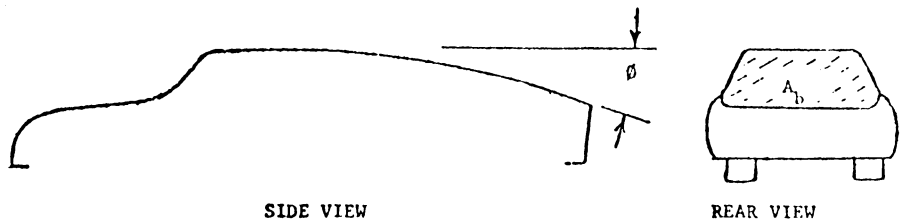

Figure 1

TABLE I—PROTUBERANCE POWER, P. VERSUS TOTAL PROTUBERANCE FRONTAL AREA, A_p

A_p (square foot)	P (horsepower)
A_p<0.30	0.0
0.30 A_p<0.60	.40
0.60 A_p<0.90	.70
0.90 A_p<1.20	1.00
1.20 A_p<1.50	1.30
1.50 A_p<1.80	1.60
1.80 A_p<2.10	1.90
2.10 A_p<2.40	2.20
2.40 A_p<2.70	2.50
2.70 A_p<3.00	2.80
3.00 A_p	3.10

The protuberance frontal area, A_p, is defined in a manner analogous to the definition of the vehicle reference frontal area, i.e., the total area of the orthogonal projections of the vehicle mirrors, hood ornaments, roof racks, and other protuberance onto a plane(s) perpendicular to both the longitudinal plane of the vehicle and the surface upon which the vehicle is positioned. A protuberance is defined as any fixture attached to the vehicle protruding more than 1 inch from the vehicle surface and having a projected area greater than 0.01 ft^2 with the area calculated by a method approved in advance by the Administrator. Included in the total protuberance frontal area shall be all fixtures which occur as standard equipment. The area of any optional equipment shall also be included if it is expected that more than 33 percent of the car line sold will be equipped with this option.

(ii) The dynamometer power absorber setting for light-duty vehicles shall be rounded to the nearest 0.1 horsepower.

(iii) For light-duty vehicles to be tested on a single, large roll dynamometer.

$$Hp = aA + P + (5.0 \times 10^{-4} + 0.33t)W$$

All symbols in the above equation are defined in paragraph (c)(2)(i) of this section. The rounding criteria of paragraph (c)(2)(i) also apply to this paragraph.

(3) The road load power calculated above shall be used or the vehicle manufacturer may determine the road load power by an alternate procedure requested by the manufacturer and approved in advance by the Administrator.

(4) Where it is expected that more than 33 percent of a car line within an engine-system combination will be equipped with air conditioning, per §86.080–24(g)(2), the road load power as determined in paragraph (c) (2) or (3) of this section shall be increased by 10 percent up to a maximum increment of 1.4 horsepower, for testing all test vehicles of that car line within that engine-system combination if those vehicles are intended to be offered with air conditioning in production. This power increment shall be added to the indicated dynamometer power absorption setting prior to rounding off this value.

[42 FR 45653, Sept. 12, 1977, as amended at 43 FR 52921, Nov. 14, 1978]

§86.129–94 Road load power, test weight, inertia weight class determination, and fuel temperature profile.

Section 86.129–94 includes text that specifies requirements that differ from §86.129–80. Where a paragraph in §86.129–80 is identical and applicable to §86.129–94, this may be indicated by specifying the corresponding paragraph and the statement ''[Reserved]. For guidance see §86.129–80.'' Where a corresponding paragraph of §86.129–80 is not applicable, this is indicated by the statement ''[Reserved].''

(a) Flywheels, electrical, or other means of simulating test weight as shown in the following table shall be used. If the equivalent test weight

specified is not available on the dynamometer being used, the next higher equivalent test weight (not to exceed 250 pounds) available shall be used:

Road load power at 50 mi/hour—light duty trucks [1,2,3]	Test weight basis [4,5]	Test equivalent test weight (pounds)	Inertia weight class (pounds)
.....	Up to 1062	1,000	1,000
.....	1063 to 1187	1,125	1,000
.....	1188 to 1312	1,250	1,250
.....	1313 to 1437	1,375	1,250
.....	1438 to 1562	1,500	1,500
.....	1563 to 1687	1,625	1,500
.....	1688 to 1812	1,750	1,750
.....	1813 to 1937	1,875	1,750
.....	1938 to 2062	2,000	2,000
.....	2063 to 2187	2,125	2,000
.....	2188 to 2312	2,250	2,250
.....	2313 to 2437	2,375	2,250
.....	2438 to 2562	2,500	2,500
.....	2563 to 2687	2,625	2,500
.....	2688 to 2812	2,750	2,750
.....	2813 to 2937	2,875	2,750
.....	2938 to 3062	3,000	3,000
.....	3063 to 3187	3,125	3,000
.....	3188 to 3312	3,250	3,000
.....	3313 to 3437	3,375	3,500
.....	3438 to 3562	3,500	3,500
.....	3563 to 3687	3,625	3,500
.....	3688 to 3812	3,750	3,500
.....	3813 to 3937	3,875	4,000
.....	3938 to 4125	4,000	4,000
.....	4126 to 4375	4,250	4,000
.....	4376 to 4625	4,500	4,500
.....	4626 to 4875	4,750	4,500
.....	4876 to 5125	5,000	5,000
.....	5126 to 5375	5,250	5,000
.....	5376 to 5750	5,500	5,500
.....	5751 to 6250	6,000	6,000
.....	6251 to 6750	6,500	6,500
.....	6751 to 7250	7,000	7,000
.....	7251 to 7750	7,500	7,500
.....	7751 to 8250	8,000	8,000
.....	8251 to 8750	8,500	8,500
.....	8751 to 9250	9,000	9,000
.....	9251 to 9750	9,500	9,500
.....	9751 to 10250	10,000	10,000
.....	10251 to 10750 ...	10,500	10,500
.....	10751 to 11250 ...	11,000	11,000
.....	11251 to 11750 ...	11,500	11,500
.....	11751 to 12250 ...	12,000	12,000
.....	12251 to 12750 ...	12,500	12,500
.....	12751 to 13250 ...	13,000	13,000
.....	13251 to 13750 ...	13,500	13,500
.....	13751 to 14000 ...	14,000	14,000

[1] For all light-duty trucks except vans, and for heavy-duty vehicles optionally certified as light-duty trucks, and for complete heavy-duty vehicles, the road load power (horsepower) at 50 mi/h shall be 0.58 times B (defined in footnote 3 of this table) rounded to the nearest ½ horsepower.

[2] For vans, the road load power at 50 mi/h (horsepower) shall be 0.50 times B (defined in footnote 3 of this table) rounded to the nearest ½ horsepower.

[3] B is the basic vehicle frontal area (square foot) plus the additional frontal area (square foot) of mirrors and optional equipment exceeding 0.1 ft^2 which are anticipated to be sold on more than 33 percent of the car line. Frontal area measurements shall be computed to the nearest 10th of a square foot using a method approved in advance by the Administrator.

[4] For model year 1994 and later heavy light-duty trucks not subject to the Tier 0 standards of § 86.094–9, test weight basis is as follows: for emissions tests, the basis shall be adjusted loaded vehicle weight, as defined in § 86.094–2; and for fuel economy tests, the basis shall be loaded vehicle weight, as defined in § 86.082–2, or, at the manufacturer's option, adjusted loaded vehicle weight as defined in § 86.094–2. For all other vehicles, test weight basis shall be loaded vehicle weight, as defined in § 86.082–2.

[5] Light-duty vehicles over 5,750 lb. loaded vehicle weight shall be tested at a 5,500 lb. equivalent test weight.

(b)–(c) [Reserved]. For guidance see § 86.129–80.

(d) *Fuel temperature profile*—(1) *General requirements*. (i) To be tested for running losses, as specified in § 86.134, a vehicle must have a fuel temperature profile. The following procedure is used to generate the fuel temperature profile, which serves as a target for controlling fuel temperatures during the running loss test. This profile represents the fuel temperature change that occurs during on-road driving. If a vehicle has more than one fuel tank, a profile shall be established for each tank. Manufacturers may also simultaneously generate a profile for vapor temperatures.

(ii) If a manufacturer uses a vehicle model to develop a profile to represent multiple models, the vehicle model selected must have the greatest expected fuel temperature increase during driving of all those models it represents. Also, manufacturers must select test vehicles with any available vehicle options that increase fuel temperatures during driving (for example, any feature that limits underbody airflow).

(iii) Manufacturers may conduct testing to develop fuel temperature profiles in a laboratory setting, subject to approval by the Administrator. The laboratory facility should simulate outdoor testing to reproduce fuel and vapor temperature behavior over the specified driving schedule. The design of the laboratory facility should include consideration of any parameters that may affect fuel temperatures, such as solar loading, pavement heat, and relative wind velocities around and underneath the test vehicle. Indoor testing to develop the fuel temperature profiles must be conducted with little or no vehicle-specific adjustment of laboratory parameters. Manufacturers would need to maintain an ongoing demonstration of correlation between laboratory and outdoor measurement of fuel temperatures. Specifically, fuel

temperatures and pressures from indoor driving should be at least as high as measured when driving outdoors according to the procedures described in this section.

(iv) Small-volume manufacturers, as defined in § 86.094–14(b)(1), may use an alternate method for generating fuel temperature profiles, subject to the approval of the Administrator.

(v) The Administrator may conduct testing to establish any vehicle's temperature profiles or to verify compliance with fuel tank pressure requirements.

(2) *Vehicle instrumentation.* (i) The vehicle must be equipped with temperature sensors and pressure transducers, as described in § 86.107–96 (e) and (f), and a driver's aid, which shall be configured to provide the test driver with the desired vehicle speed vs. time trace and the actual vehicle speed.

(ii) A computer, data logger, or strip chart data recorder shall record the following parameters at a minimum during the test run:

(A) Desired speed;

(B) Actual speed;

(C) Instantaneous average liquid fuel temperature (T_{liq}); and

(D) Vapor space pressure (the Administrator may omit measurement of fuel tank pressure).

(iii) The data recording system described in paragraph (d)(2)(ii) of this section shall be capable of resolving time to ±1 s, capable of resolving temperature to ±2 °F, capable of resolving pressure to ±1.0 inch of water, and capable of resolving speed to ±1 mph. The temperature and pressure signals shall be recorded at intervals of up to 1 minute; speed signals shall be recorded at intervals of up to 1 second.

(3) *Ambient conditions.* The procedure shall be run under the following ambient conditions. Conditions should be representative of sunny summer days.

(i) Starting ambient temperature ($T_{amb,o}$) shall be at least 95 °F, steady or increasing (no more than 2 °F drop) during the procedure. Ambient temperature shall be measured and recorded in regular intervals of at least once every 5 minutes. Measure ambient temperature with the following requirements (based on *Federal Standard for Siting Meteorological Sensors at Airports*, FCM-S4–1987). The sensors shall be mounted 5±1 feet (1.5±0.3 meters) above ground level. The sensors shall be protected from radiation from the sun, sky, earth, and any other surrounding objects, but at the same time be adequately ventilated. The sensors shall be installed in such a position as to ensure that measurements are representative of the free air circulation in the locality and not influenced by artificial conditions such as large buildings, cooling towers, and expanses of concrete and tarmac. Keep any grass and vegetation within 100 feet (30 meters) of the sensor clipped to a height of about 10 inches (25 centimeters) or less.

(ii) Wind conditions shall be calm to light with maximum wind speed of 15 mph. In the case of temporary gusting, wind speeds between 15 and 25 mph may occur for up to 5 percent of the total driving time without invalidating the data collection. Wind speed shall be measured and recorded in regular intervals of at least once per minute. Measure wind speed with the following requirements (based on *Federal Standard for Siting Meteorological Sensors at Airports*, FCM-S4–1987). The site should be relatively level, but small gradual slopes are acceptable. The sensor shall be mounted 30 to 33 feet (9 to 10 meters) above the average ground height within a radius of 500 feet (150 meters). The sensor height shall not exceed 33 feet, except as necessary to be at least 15 feet (5 meters) above the height of any obstruction (e.g. vegetation, buildings, etc.) within a 500 foot (150 meter) radius. An object is considered to be an obstruction if the included lateral angle from the sensor to the ends of the object is 10 degrees or more.

(iii) Road surface temperature shall be at least 125 °F throughout the driving period. Pavement temperature shall be measured and recorded in regular intervals of at least once per minute. The track temperature may be measured with an embedded sensor, a portable temperature probe, or an infrared pyrometer that can provide an accuracy of ±2 °F. Temperatures must be measured on a surface representative of the surface where the vehicle is driven.

(iv) Conditions shall be sunny or mostly sunny with a maximum cloud cover of 25 percent.

(v) Reported cloud cover, wind speed, and ambient temperature should be consistent with that reported by the nearest weather station; the Administrator may request justification of any discrepancy.

(4) *Profile determination procedure.* (i) Drain the fuel tank(s) and fill with test fuel to the ''tank fuel volume'' defined in § 86.082–2. The test fuel should meet the specifications of § 86.113, except that fuel with a lower volatility may be used, subject to Administrator approval. Manufacturers using a lower volatility fuel must generate a vapor temperature profile for demonstrating compliance with the limit on fuel tank pressure during the running loss test (see § 86.134–96).

(ii) The vehicle shall be moved to the location where the data is to be collected. It may be driven a maximum distance of 5 miles and may also be transported by other means. The vehicle shall be stabilized by one of the following methods:

(A) The vehicle shall be parked for a minimum of 12 hours in an open area on a surface that is representative of the test road, without any artificial heating or cooling of the fuel. The orientation of the front of the vehicle during parking (e.g., N, SW, etc.) shall be documented.

(B) The vehicle may be soaked in a temperature-controlled environment to stabilize fuel temperatures. Before starting the drive, the vehicle shall be stabilized with fuel temperatures 95 ±3 °F for at least one hour. The fuel temperature may not exceed 98 °F at any time before the beginning of the driving schedule, during which only whole-vehicle heating and cooling may be used to control fuel temperatures. If a manufacturer uses the provisions of paragraph (d)(7)(v) of this section to establish a lower initial fuel temperature for the running loss test, the fuel in the test vehicle may not be stabilized at a temperature higher than the newly established initial fuel temperature.

(iii) Once the ambient conditions specified in paragraph (d)(3) of this section are met and the vehicle has been stabilized according to paragraph (d)(4)(ii) of this section, the vehicle's engine may be started. The vehicle's air conditioning system (if so equipped) shall be set to the ''normal'' air conditioning mode and adjusted to the minimum discharge air temperature and high fan speed. Vehicles equipped with automatic temperature controlled air conditioning systems shall be set to operate in ''automatic'' temperature and fan modes with the system set at 72 °F.

(iv) The vehicle may be operated at minimum throttle for a period up to 60 seconds prior to the start of the driving schedule, as necessary to move from the parking location onto the road surface. The driver's aid shall be started and the vehicle operated over the driving cycle specified in § 86.134–96(b) with the transmission operated in the same manner as specified in § 86.128–79. The data recording system shall provide a record of the required parameters over the entire period of driving.

(5) *Records required.* In addition to the vehicle data recording, the following parameters shall be documented for the determination of the fuel temperature profile:

(i) Date and time of vehicle fueling;

(ii) Odometer reading at vehicle fueling;

(iii) Date and time vehicle was parked, parking location and orientation;

(iv) Odometer reading at parking;

(v) Date and time engine was started;

(vi) Time of initiation of first UDDS;

(vii) Time of completion of the driving cycle;

(viii) Ambient temperatures throughout the period of driving (T_{amb});

(ix) Wind speed throughout the period of driving;

(x) Track surface temperatures throughout the period of driving cycle (T_{sur});

(xi) Percent cloud cover during the period of driving; and

(xii) Ambient temperature, wind speed, and percent cloud cover reported by the nearest weather station for the time corresponding most closely to the period of driving.

(6) *Fuel tank pressure.* Tank pressure shall not exceed 10 inches of water at any time during the temperature profile determination unless a pressurized

system is used and the manufacturer demonstrates that vapor would not be vented to the atmosphere upon fuel cap removal.

(7) *Calculation of temperature profiles.* (i) The traces from the driving schedule shall be verified to meet the speed tolerance requirements of § 86.115. The following conditions shall be verified:

(A) $T_{amb,\,i} \geq T_{amb,\,o} - 2$ °F.

Where,

(*1*) i=instantaneous measurement throughout the drive; and

(*2*) o=initial measurement at the start of the specified driving schedule.

(B) $T_{amb,\,o} \geq 95$ °F.

(C) $T_{sur,\,i} - T_{amb,\,i} \geq 30$ °F.

(D) $W_{max} \leq 15$ mph.

(ii) Failure to comply with any of these requirements shall result in invalidation of the data and require that the procedure be repeated, beginning with the fuel drain at paragraph (d)(4)(i) of this section.

(iii) If all these requirements are met, the following calculations shall be performed to determine a profile for liquid fuel temperatures and, if applicable, for vapor temperatures:

$T_{i,\,profile} = T_i - T_o$.

Where:

(A) $Ti,_{profile}$=the series of temperatures that comprise the relative temperature profile.

(B) T_i=the series of observed liquid fuel or vapor temperatures during the drive.

(C) T_o=the liquid fuel or vapor temperature observed at the start of the specified driving schedule.

(iv) The relative temperature profile consists of the set of temperatures at each 1-minute interval. If temperatures are sampled more frequently than once per minute, the temperature data points may represent a rolling average of temperatures sampled for up to one-minute intervals. If multiple valid test runs are conducted for any model, then all the collected data shall be used to calculate a composite profile, based on the average temperatures at each point. The absolute temperature profile is determined by adding 95 °F (35 °C) to each point of the relative profile. Other methodologies for developing corrected liquid fuel and vapor space temperature profiles may be used if demonstrated to yield equivalent results and approved in advance by the Administrator.

(v) Manufacturers may use a lower initial fuel temperature for the running loss test, if approved in advance by the Administrator. To demonstrate the need for such an adjustment, manufacturers would be expected to determine the maximum fuel temperature experienced by a vehicle during an extended park or after driving one UDDS cycle when exposed to the ambient conditions described in paragraph (d)(3) of this section. To use this provision, manufacturers would have to show maximum fuel temperatures no greater than 92 °F.

[56 FR 25775, June 5, 1991, as amended at 58 FR 16033, Mar. 24, 1993; 59 FR 39649, Aug. 3, 1994; 60 FR 43891, Aug. 23, 1995; 65 FR 59956, Oct. 6, 2000]

§ 86.130–00 Test sequence; general requirements.

Applicability. Section 86.130–96 (a) through (d) is applicable to vehicles tested for the FTP test. Paragraph (e) of this section is applicable to vehicles tested for the SFTP supplemental tests of air conditioning (SC03) and aggressive driving (US06). Paragraph (f) of this section is applicable to all emission testing. Section 86.130–00 includes text that specifies requirements that differ from § 86.130–96. Where a paragraph in § 86.130–96 is identical and applicable to § 86.130–00, this may be indicated by specifying the corresponding paragraph and the statement ''[Reserved]. For guidance see § 86.130–96.''

(a)–(d) [Reserved]. For guidance see § 86.130–96.

(e) The supplemental tests for exhaust emissions related to aggressive driving (US06) and air conditioning (SC03) use are conducted as stand-alone tests as described in §§ 86.158–00, 86.159–00, and 86.160–00. These tests may be performed in any sequence that maintains the appropriate preconditioning requirements for these tests as specified in § 86.132–00.

(f) If tests are invalidated after collection of emission data from previous test segments, the test may be repeated to collect only those data points needed to complete emission measurements. Compliance with emission

standards may be determined by combining emission measurements from different test runs. If any emission measurements are repeated, the new measurements supersede previous values.

[61 FR 54893, Oct. 22, 1996]

§ 86.130–78 Test sequence; general requirements.

The test sequence shown in figure B78–10 shows the steps encountered as the test vehicle undergoes the procedures subsequently described to determine conformity with the standards set forth. Ambient temperature levels encountered by the test vehicle shall not be less than 68 °F (20 °C) nor more than 86 °F (30 °C). The temperatures monitored during testing must be representative of those experienced by the test vehicle. The vehicle shall be approximately level during all phases of the test sequence to prevent abnormal fuel distribution.

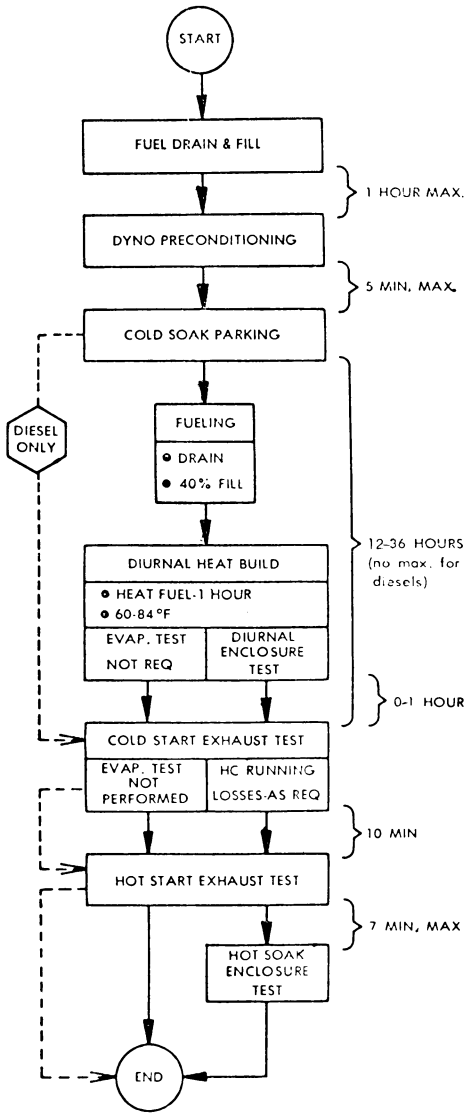

Figure B96-10 TEST SEQUENCE

§86.130–96 Test sequence; general requirements.

(a)(1) *Gasoline- and methanol-fueled vehicles.* The test sequence shown in figure B96–10 shows the steps encountered as the test vehicle undergoes the procedures subsequently described to determine conformity with the standards set forth. The full three- diurnal sequence depicted in figure B96–10 tests vehicles for all sources of evaporative emissions. The supplemental two-diurnal test sequence is designed to verify that vehicles sufficiently purge their evaporative canisters during the exhaust emission test. Sections 86.132–96,

86.133–96 and 86.138–96 describe the separate specifications of the supplemental two-diurnal test sequence.

(2) *Gaseous-fueled vehicles.* The test sequence shown in figure B96–10 shows the steps encountered as the test vehicle undergoes the procedures subsequently described to determine conformity with the standards set forth, with the exception that the fuel drain and fill and precondition canister steps are not required for gaseous-fueled vehicles. In addition, the supplemental two-diurnal test and the running loss test are not required.

(b) The vehicle test for fuel spitback during fuel dispensing is conducted as a stand-alone test (see § 86.146). This test is not required for gaseous-fueled vehicles.

(c) Ambient temperature levels encountered by the test vehicle shall be not less than 68 °F nor more than 86 °F, unless otherwise specified. If a different ambient temperature is specified for soaking the vehicle, the soak period may be interrupted once for up to 10 minutes to transport the vehicle from one soak area to another, provided the ambient temperature experienced by the vehicle is never below 68 °F. The temperatures monitored during testing must be representative of those experienced by the test vehicle.

(d) The vehicle shall be approximately level during all phases of the test sequence to prevent abnormal fuel distribution.

(e) If tests are invalidated after collection of emission data from previous test segments, the test may be repeated to collect only those data points needed to complete emission measurements. Compliance with emission standards may be determined by combining emission measurements from different test runs. If any emission measurements are repeated, the new measurements supersede previous values.

Federal Test Procedure

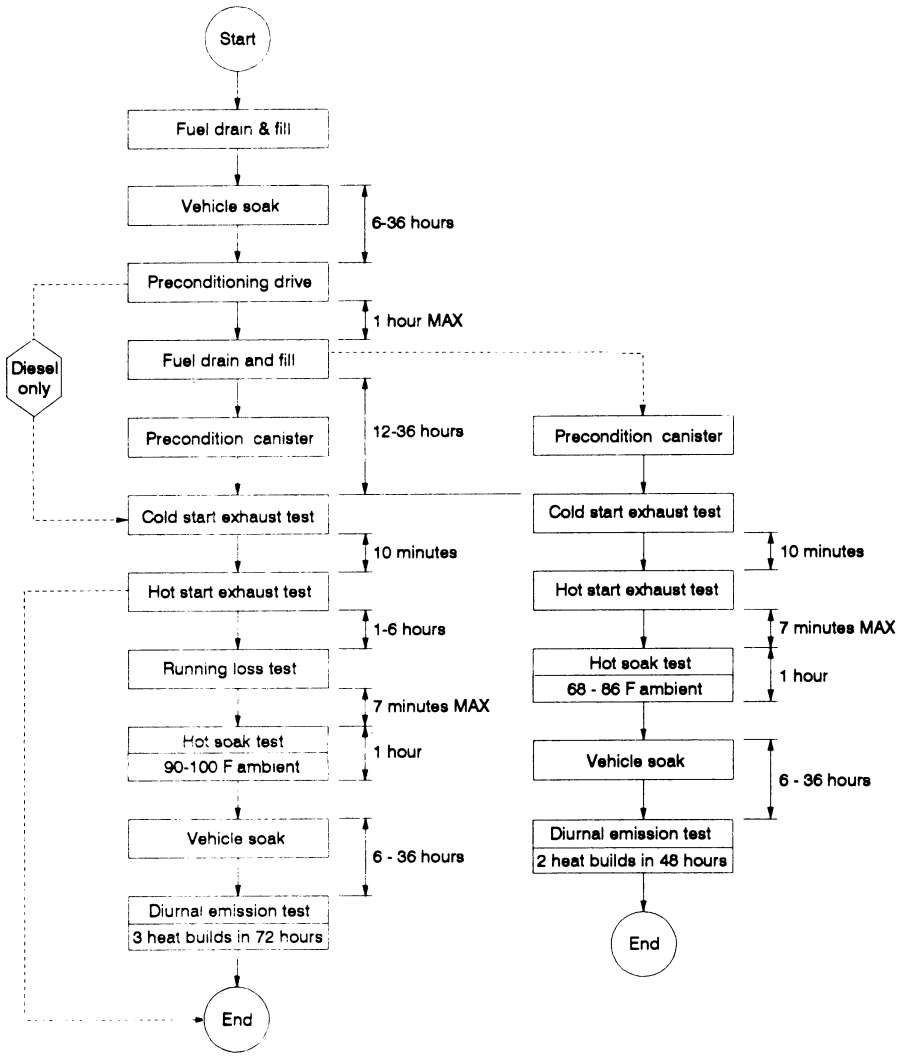

Figure B96-10 Test sequence

[58 FR 16034, Mar. 24, 1993, as amended at 59 FR 48509, Sept. 21, 1994; 60 FR 43893, Aug. 23, 1995]

§ 86.131–00 Vehicle preparation.

Section 86.131–00 includes text that specifies requirements that differ from § 86.131–96. Where a paragraph in § 86.131–96 is identical and applicable to § 86.131–00, this may be indicated by specifying the corresponding paragraph and the statement ''[Reserved]. For guidance see § 86.131–96.''

(a)–(e) [Reserved]. For guidance see § 86.131–96.

(f) For vehicles to be tested for aggressive driving emissions (US06), provide a throttle position sensing signal that is compatible with the test dynamometer. This signal provides the input information that controls dynamometer dynamic inertia weight adjustments (see §§ 86.108–00(b)(2)(ii) and 86.129–00(f)(2)). If a manufacturer chooses not to implement dynamic inertia adjustments for a portion or all of their product line, this requirement is not applicable.

[61 FR 54893, Oct. 22, 1996]

§ 86.131–90 Vehicle preparation.

(a) For gasoline-fueled and methanol-fueled vehicles prepare the fuel tank(s) for recording the temperature of the prescribed test fuel at the approximate mid-volume of the fuel.

(b) Provide additional fittings and adapters, as required, to accommodate a fuel drain at the lowest point possible in the tank(s) as installed on the vehicle.

[54 FR 14527, Apr. 11, 1989]

§ 86.131–96 Vehicle preparation.

(a) For gasoline- and methanol-fueled vehicles prepare the fuel tank(s) for recording the temperature of the prescribed test fuel, as described in § 86.107–96(e).

(b) Provide additional fittings and adapters, as required, to accommodate a fuel drain at the lowest point possible in the tank(s) as installed on the vehicle.

(c) For preconditioning that involves loading the evaporative emission canister(s) with butane, provide valving or other means as necessary to allow purging and loading of the canister(s).

(d) For vehicles to be tested for running loss emissions, prepare the fuel tank(s) for measuring and recording the temperature and pressure of the fuel tank as specified in § 86.107–96 (e) and (f). Measurement of vapor temperature is optional during the running loss test. If vapor temperature is not measured, fuel tank pressure need not be measured.

(e) For vehicles to be tested for running loss emissions, prepare the exhaust system by sealing or plugging all detectable sources of exhaust gas leaks. The exhaust system shall be tested or inspected to ensure that detectable exhaust hydrocarbons are not emitted into the running loss enclosure during the running loss test.

[58 FR 16037, Mar. 24, 1993, as amended at 60 FR 43895, Aug. 23, 1995]

§ 86.132–00 Vehicle preconditioning.

Applicability. Section 86.132–96 (a) through (c)(1) and (d) through (m) and paragraph (c)(2) of this section are applicable to FTP and evaporative emission testing. Paragraphs (n) and (o) of this section are applicable to vehicles tested for the SFTP supplemental tests of aggressive driving (US06) and air conditioning (SC03). Section 86.132–00 includes text that specifies requirements that differ from § 86.132–96. Where a paragraph in § 86.132–96 is identical and applicable to § 86.132–00, this may be indicated by specifying the corresponding paragraph and the statement ''[Reserved]. For guidance see § 86.132–96.''

(a)–(c)(1) [Reserved]. For guidance see § 86.132–96.

(c)(2)(i) Once a test vehicle has completed the refueling and vehicle soak steps specified in § 86.132–96 (b) and (c)(1), these steps may be omitted in subsequent testing with the same vehicle and the same fuel specifications, provided the vehicle remains under laboratory ambient temperature conditions for at least 6 hours before starting the next test. In such cases, each subsequent test shall begin with the preconditioning drive specified in § 86.132–96(c)(1). The test vehicle may not be used to set dynamometer horsepower.

(ii) The SFTP test elements of aggressive driving (US06) and air conditioning (SC03) can be run immediately or up to 72 hours after the official FTP

and/or evaporative test sequence without refueling provided the vehicle has remained under laboratory ambient temperature conditions. If the time interval exceeds 72 hours or the vehicle leaves the ambient temperature conditions of the laboratory, the manufacturer must repeat the refueling operation.

(d)–(m) [Reserved]. For guidance see § 86.132–96.

(n) *Aggressive Driving Test (US06) Preconditioning.* (1) If the US06 test follows the exhaust emission FTP or evaporative testing, the refueling step may be deleted and the vehicle may be preconditioned using the fuel remaining in the tank (see paragraph (c)(2)(ii) of this section). The test vehicle may be pushed or driven onto the test dynamometer. Acceptable cycles for preconditioning are as follows:

(i) If the soak period since the last exhaust test element is less than or equal to two hours, preconditioning may consist of a 505, 866, highway, US06, or SC03 test cycles.

(ii) If the soak period since the last exhaust test element is greater than two hours, preconditioning consists of one full Urban Dynamometer Driving Cycle. Manufacturers, at their option, may elect to use the preconditioning in paragraph (n)(1)(i) of this section when the soak period exceeds two hours.

(iii) If a manufacturer has concerns about fuel effects on adaptive memory systems, a manufacturer may precondition a test vehicle on test fuel and the US06 cycle. Upon request from a manufacturer, the administrator will also perform the preconditioning with the US06 cycle.

(iv) The preconditioning cycles for the US06 test schedule are conducted at the same ambient test conditions as the certification US06 test.

(2) Following the preconditioning specified in paragraphs (n)(1)(i), (ii), and (iii) of this section, the test vehicle is returned to idle for one to two minutes before the start of the official US06 test cycle.

(o) *Air Conditioning Test (SC03) Preconditioning.* (1) If the SC03 test follows the exhaust emission FTP or evaporative testing, the refueling step may be deleted and the vehicle may be preconditioned using the fuel remaining in the tank (see paragraph (c)(2)(ii) of this section). The test vehicle may be pushed or driven onto the test dynamometer. Acceptable cycles for preconditioning are as follows:

(i) If the soak period since the last exhaust test element is less than or equal to two hours, preconditioning may consist of a 505, 866, or SC03 test cycles.

(ii) If the soak period since the last exhaust test element is greater than two hours, preconditioning consists of one full Urban Dynamometer Driving Cycle. Manufacturers, at their option, may elect to use the preconditioning in paragraph (o)(1)(i) of this section when the soak period exceeds two hours.

(2) Following the preconditioning specified in paragraphs (o)(1)(i) and (ii) of this section, the test vehicle is turned off, the vehicle cooling fan(s) is turned off, and the vehicle is allowed to soak for 10 minutes prior to the start of the official SC03 test cycle.

(3) The preconditioning cycles for the SC03 air conditioning test and the 10 minute soak are conducted at the same ambient test conditions as the SC03 certification air conditioning test.

[61 FR 54893, Oct. 22, 1996]

§ 86.132–90 Vehicle preconditioning.

(a) The vehicle shall be moved to the test area and the following operations performed:

(1) The fuel tank(s) shall be drained through the provided fuel tank(s) drain(s) and filled to the prescribed ''tank fuel volume'' with the specified test fuel, § 86.113. For the above operations the evaporative emission control system shall neither be abnormally purged nor abnormally loaded.

(2) Within one hour of being fueled the vehicle shall be placed, either by being driven or pushed, on a dynamometer and operated through one Urban Dynamometer Driving Schedule test procedure, see § 86.115 and appendix I. A test vehicle may not be used to set dynamometer horsepower.

(3) For those unusual circumstances where additional preconditioning is desired by the manufacturer, such preconditioning may be allowed with the advance approval of the Administrator.

(4) The Administrator may also choose to conduct or require the conduct of additional preconditioning to insure that the evaporative emission control system is stabilized in the case of gasoline-fueled and methanol-fueled vehicles, or to insure that the exhaust system is stabilized in the case of petroleum-fueled, natural gas-fueled, liquefied petroleum gas-fueled and methanol-fueled diesel vehicles.

(i) *Gasoline-fueled and methanol-fueled vehicles.* (A) The additional preconditioning shall consist of an initial one hour minimum soak and, one, two, or three driving cycles of the UDDS, as described in (a)(2) of this section, each followed by a soak of at least one hour with engine off, engine compartment cover closed and cooling fan off.

(B) The vehicle may be driven off the dynamometer following each UDDS for the soak period.

(ii) *Petroleum-fueled diesel vehicles, natural gas-fueled and liquefied petroleum gas-fueled vehicles.* The preconditioning shall consist of either of the following:

(A) The additional preconditioning described in paragraph (a)(4)(i) of this section; or

(B) For abnormally treated vehicles, as defined in § 86.085–2, two Highway Fuel Economy Driving Schedules, found in part 600 appendix I, run in immediate succession, with the road load power set at twice the value obtained from § 86.129–80.

(b) Within five minutes of completion of preconditioning, the vehicle shall be driven off the dynamometer and parked. The vehicle shall be stored for not less than 12 hours nor for more than 36 hours prior to the cold start exhaust test. (Gasoline-fueled and methanol-fueled vehicles undergo a one-hour diurnal heat build prior to the cold start exhaust test. A wait of up to one hour is permitted between the end of the diurnal heat build and the beginning of the cold start exhaust test. See § 86.130 and Figure B79–5.)

(c) Vehicles to be tested for evaporative emissions shall be processed in accordance with procedures in §§ 86.133 through 86.138. Vehicles to be tested for exhaust emissions only shall be processed according to § 86.133 through § 86.137.

[54 FR 14527, Apr. 11, 1989, as amended at 59 FR 48509, Sept. 21, 1994]

§ 86.132–96 Vehicle preconditioning.

(a) Fuel tank cap(s) of gasoline- and methanol-fueled vehicles shall be removed during any period that the vehicle is parked outdoors awaiting testing, to prevent unusual loading of the canisters. During this time care must be taken to prevent entry of water or other contaminants into the fuel tank. During storage in the test area while awaiting testing, the fuel tank cap(s) may be in place. The vehicle shall be moved into the test area and the following operations performed.

(b)(1) *Gasoline- and Methanol-Fueled Vehicles.* Drain the fuel tank(s) and fill with test fuel, as specified in § 86.113, to the ''tank fuel volume'' defined in § 86.082–2. The fuel cap(s) shall be installed within one minute after refueling.

(2) *Gaseous-Fueled Vehicles.* Vehicle fuel tanks to be filled with fuel that meets the specifications in § 86.113. Fuel tanks shall be filled to a minimum of 75% of service pressure for natural gas-fueled vehicles or a minimum of 75% of available fill volume for liquefied petroleum gas-fueled vehicles. Prior draining of the fuel tanks is not called for if the fuel in the tanks already meets the specifications in § 86.113.

(c)(1) Gasoline- and methanol-fueled vehicles shall be soaked for at least 6 hours after being refueled. Petroleum-fueled diesel vehicles and gaseous-fueled vehicles shall be soaked for at least 1 hour after being refueled. Following this soak period, the test vehicle shall be placed, either by being driven or pushed, on a dynamometer and operated through one Urban Dynamometer Driving Schedule (UDDS), specified in § 86.115 and appendix I of this part.

(2) Once a test vehicle has completed the refueling and vehicle soak steps specified in paragraphs (b) and (c)(1) of this section, these steps may be omitted in subsequent testing with the same vehicle and the same fuel specifications, provided the vehicle remains under laboratory ambient temperature

conditions for at least 6 hours before starting the next test. In such cases, each subsequent test shall begin with the preconditioning drive specified in this paragraph. The test vehicle may not be used to set dynamometer horsepower.

(d) For unusual circumstances where the need for additional preconditioning is demonstrated by the manufacturer, such preconditioning may be allowed with the advance approval of the Administrator.

(e) The Administrator may also choose to conduct or require to be conducted additional preconditioning to ensure that the evaporative emission control system is stabilized in the case of gasoline-fueled and methanol-fueled vehicles, or to ensure that the exhaust system is stabilized in the case of petroleum- and methanol-fueled diesel vehicles. The preconditioning shall consist of one of the following:

(1) *For gasoline- and methanol-fueled vehicles.* (i) Additional preconditioning shall consist of no more than 50 miles of mileage accumulation under typical driving conditions, either on the road or on a dynamometer.

(ii) In the case of repeat testing on a flexible-fueled vehicle, in which the test fuel is changed, the following preconditioning procedure shall be used. This additional preconditioning allows the vehicle to adapt to the new fuel before the next test run.

(A) Purge the vehicle's evaporative canister for 60 minutes at 0.8 cfm.

(B) Drain the fuel tank(s) and fill with 3 gallons of the test fuel.

(C) Start the vehicle and allow it to idle for 1 minute.

(D) Drain the fuel tank(s) and fill with the new test fuel to the ''tank fuel volume'' defined in § 86.082–2. The average temperature of the dispensed fuel shall be less than 60 °F.

(E) Conduct a heat build according to the procedure specified in § 86.133–90.

(F) The vehicle shall be placed, either by being driven or pushed, on a dynamometer and operated through one UDDS, specified in § 86.115 and appendix I of this part.

(G) Following the dynamometer drive, the vehicle shall be turned off for 5 minutes, then restarted and allowed to idle for 1 minute. The vehicle shall then be turned off for 1 minute, and allowed to idle again for 1 minute.

(H) After the vehicle is turned off the last time, it may be tested for evaporative and exhaust emissions, starting with paragraph (a) of this section.

(2) *For petroleum-fueled diesel, methanol-fueled diesel, and gaseous-fueled vehicles.* The preconditioning shall consist of either of the following:

(i) An initial one hour minimum soak and, one, two, or three driving cycles of the UDDS, as described in paragraph (c) of this section, each followed by a soak of at least one hour with engine off, engine compartment cover closed and cooling fan off. The vehicle may be driven off the dynamometer following each UDDS for the soak period; or

(ii) For abnormally treated vehicles, as defined in § 86.085–2 or § 86.1803–01 as applicable, two Highway Fuel Economy Driving Schedules, found in 40 CFR part 600, appendix I, run in immediate succession, with the road load power set at twice the value obtained from § 86.129–80.

(f)(1) *Gasoline- and methanol-fueled vehicles.* After completion of the preconditioning drive, the vehicle shall be driven off the dynamometer. The vehicle's fuel tank(s) shall be drained and then filled with test fuel, as specified in § 86.113, to the ''tank fuel volume'' defined in § 86.082–2. The vehicle shall be refueled within 1 hour after completion of the preconditioning drive. The fuel cap(s) shall be installed within 1 minute after refueling. The vehicle shall be parked within five minutes after refueling.

(2) *Petroleum-fueled diesel vehicles.* Within five minutes after completion after the preconditioning drive, the vehicle shall be driven off the dynamometer and parked.

(3) *Gaseous-fueled vehicles.* After completion of the preconditioning drive, the vehicle shall be driven off the dynamometer. Vehicle fuel tanks shall be refilled with fuel that meets the specifications in § 86.113. Fuel tanks shall be filled to a minimum of 75% of service pressure for natural gas-fueled vehicles or a minimum of 75% of available fill volume for liquefied petroleum gas-fueled vehicles. Prior draining of the fuel tanks is not called for if the fuel in

the tanks already meets the specifications in § 86.113. The vehicle shall be parked within five minutes after refueling, or, in the absence of refueling, within five minutes after completion of the preconditioning drive.

(g) The vehicle shall be soaked for not less than 12 hours nor more than 36 hours between the end of the refueling event and the beginning of the cold start exhaust emission test.

(h) During the soak period for the three-diurnal test sequence described in § 86.130–96, evaporative canisters, if the vehicle is so equipped, shall be preconditioned according to the following procedure. For vehicles with multiple canisters in a series configuration, the set of canisters must be preconditioned as a unit. For vehicles with multiple canisters in a parallel configuration, each canister must be preconditioned separately. If production evaporative canisters are equipped with a functional service port designed for vapor load or purge steps, the service port shall be used during testing to precondition the canister. In addition, for model year 1998 and later vehicles equipped with refueling canisters, these canisters shall be preconditioned for the three-diurnal test sequence according to the procedure in paragraph (j)(1) of this section. If a vehicle is designed to actively control evaporative or refueling emissions without a canister, the manufacturer shall devise an appropriate preconditioning procedure, subject to the approval of the Administrator.

(1)(i) Prepare the evaporative emission canister for the canister purging and loading operation. The canister shall not be removed from the vehicle, unless access to the canister in its normal location is so restricted that purging and loading can only reasonably be accomplished by removing the canister from the vehicle. Special care shall be taken during this step to avoid damage to the components and the integrity of the fuel system. A replacement canister may be temporarily installed during the soak period while the canister from the test vehicle is preconditioned.

(ii) The canister purge shall be performed with ambient air of humidity controlled to 50±25 grains per pound of dry air. This may be accomplished by purging the canister in a room that is conditioned to this level of absolute humidity. The flow rate of the purge air shall be maintained at a nominal flow rate of 0.8 cfm and the duration shall be determined to provide a total purge volume flow through the canister equivalent to 300 canister bed volume exchanges. The bed volume is based on the volume of adsorbing material in the canister.

(iii) The evaporative emission canister shall then be loaded by sending to the canister an amount of commercial grade butane vapors equivalent to 1.5 times its nominal working capacity. The canister shall be loaded with a mixture composed of 50 percent butane and 50 percent nitrogen by volume at a rate of 15±2 grams butane per hour. If the canister loading at that rate takes longer than 12 hours, a manufacturer may determine a new rate, based on completing the canister loading in no less than 12 hours. The new rate may be used for all subsequent canister loading according to paragraph (h) of this section. The time of initiation and completion of the canister loading shall be recorded.

(iv) The determination of a canister's nominal working capacity shall be based on the average capacity of no less than five canisters that are in a stabilized condition.

(A) For stabilization, each canister must be loaded no less than 10 times and no more than 100 times to 2-gram breakthrough with a 50/50 mixture by volume of butane and nitrogen, at a rate of 15 grams butane per hour. Each canister loading step must be preceded by canister purging with 300 canister bed volume exchanges at 0.8 cfm.

(B) For determining working capacity, each canister must first be purged with 300 canister bed volume exchanges at 0.8 cfm. The working capacity of each canister shall be established by determining the mass of butane required to load the canister from the purged state so that it emits 2 grams of hydrocarbon vapor; the canister must be loaded with a 50/50 mixture by volume of butane and nitrogen, at a rate of 15 grams butane per hour.

(2) For methanol-fueled and flexible-fueled vehicles, canister preconditioning shall be performed with a fuel

vapor composition representative of that which the vehicle would generate with the fuel mixture used for the current test. Manufacturers shall develop a procedure to precondition the evaporative canister, if the vehicle is so equipped, for the different fuel. The procedure shall represent a canister loading equivalent to that specified in paragraph (h)(1) of this section and shall be approved in advance by the Administrator.

(i) [Reserved]

(j) For the supplemental two-diurnal test sequence described in § 86.130–96, one of the following methods shall be used to precondition evaporative canisters during the soak period specified in paragraph (g) of this section. For vehicles with multiple canisters in a series configuration, the set of canisters must be preconditioned as a unit. For vehicles with multiple canisters in a parallel configuration, each canister must be preconditioned separately. In addition, for model year 1998 and later vehicles equipped with refueling canisters, these canisters shall be preconditioned for the supplemental two-diurnal test sequence according to the procedure in paragraph (j)(1) of this section. Canister emissions are measured to determine breakthrough. Breakthrough is here defined as the point at which the cumulative quantity of hydrocarbons emitted is equal to 2 grams.

(1) *Butane loading to breakthrough.* The following procedure provides for emission measurement in an enclosure. Breakthrough may also be determined by measuring the weight gain of an auxiliary evaporative canister connected downstream of the vehicle's canister, in which case, the following references to the enclosure can be ignored. The auxiliary canister shall be well purged prior to loading. If production evaporative canisters are equipped with a functional service port designed for vapor load or purge steps, the service port shall be used during testing to precondition the canister.

(i) Prepare the evaporative/refueling emission canister for the canister loading operation. The canister shall not be removed from the vehicle, unless access to the canister in its normal location is so restricted that purging and loading can only reasonably be accomplished by removing the canister from the vehicle. Special care shall be taken during this step to avoid damage to the components and the integrity of the fuel system. A replacement canister may be temporarily installed during the soak period while the canister from the test vehicle is preconditioned.

(ii) The evaporative emission enclosure shall be purged for several minutes. Warning: If at any time the concentration of hydrocarbons, of methanol, or of methanol and hydrocarbons exceeds 15,000 ppm C the enclosure should be immediately purged. This concentration provides at least a 4:1 safety factor against the lean flammability limit.

(iii) The FID hydrocarbon analyzer shall be zeroed and spanned immediately prior to the canister loading procedure.

(iv) If not already on, the evaporative enclosure mixing fan shall be turned on at this time.

(v) Place the vehicle in a sealed enclosure and measure emissions with a FID.

(vi)(A) For gasoline-fueled vehicles, load the canister with a mixture composed of 50 percent butane and 50 percent nitrogen by volume at a rate of 40 grams butane per hour.

(B) For methanol-fueled and flexible-fueled vehicles, canister preconditioning shall be performed with a fuel vapor composition representative of that which the vehicle would generate with the fuel mixture used for the current test. Manufacturers shall develop a procedure to precondition the evaporative canister, if the vehicle is so equipped, for the different fuel.

(vii) As soon as the canister reaches breakthrough, the vapor source shall be shut off.

(viii) Reconnect the evaporative/refueling emission canister and restore the vehicle to its normal operating condition.

(2) *Load with repeated diurnal heat builds to breakthrough.* The following procedure provides for emission measurement in an enclosure. Breakthrough may also be determined by measuring the weight gain of an auxiliary evaporative canister connected downstream of the vehicle's canister, in which case,

the following references to the enclosure can be ignored. The auxiliary canister shall be well purged with dry air prior to loading.

(i) The evaporative emission enclosure shall be purged for several minutes. WARNING: If at any time the concentration of hydrocarbons, of methanol, or of methanol and hydrocarbons exceeds 15,000 ppm C the enclosure should be immediately purged. This concentration provides at least a 4:1 safety factor against the lean flammability limit.

(ii) The FID hydrocarbon analyzer shall be zeroed and spanned immediately prior to the diurnal heat builds.

(iii) If not already on, the evaporative enclosure mixing fan shall be turned on at this time.

(iv) The fuel tank(s) of the prepared vehicle shall be drained and filled with test fuel, as specified in § 86.113, to the ''tank fuel volume'' defined in § 86.082–2. The average temperature of the dispensed fuel shall be 60±12 °F (16±7 °C). The fuel tank cap(s) shall be installed within 1 minute after refueling.

(v) Within one hour of being refueled, the vehicle shall be placed, with the engine shut off, in the evaporative emission enclosure. The fuel tank temperature sensor shall be connected to the temperature recording system. A heat source, specified in § 86.107–90(a)(4), shall be properly positioned with respect to the fuel tank(s) and connected to the temperature controller.

(vi) The temperature recording system shall be started.

(vii) The fuel may be artificially heated to the starting diurnal temperature.

(viii) When the fuel temperature reaches at least 69 °F (21 °C), immediately: turn off purge blower (if not already off); close and seal enclosure doors; and initiate measurement of the hydrocarbon level in the enclosure.

(ix) When the fuel temperature reaches 72±2 °F (22±1 °C), start the diurnal heat build.

(x) The fuel shall be heated in such a way that its temperature change conforms to the following function to within ±4 °F (±3 °C):

$F=T_o+0.4t$; or

for SI units,

$C=T_o+(2/9)t$.

Where,

F=fuel temperature, °F;
C=fuel temperature, °C;
t=time since beginning of test, minutes; and
T_o=initial temperature in °F (°C for SI units).

(xi) As soon as breakthrough occurs or when the fuel temperature reaches 96 °F (36 °C), whichever occurs first, the heat source shall be turned off, the enclosure doors shall be unsealed and opened, and the vehicle fuel tank cap(s) shall be removed. If breakthrough has not occurred by the time the fuel temperature reaches 96 °F (36 °C), the heat source shall be removed from the vehicle, the vehicle shall be removed (with engine still off) from the evaporative emission enclosure and the entire procedure outlined in paragraph (j)(2) of this section shall be repeated until breakthrough occurs.

(xii) After breakthrough occurs, the fuel tank(s) of the prepared vehicle shall be drained and filled with test fuel, as specified in § 86.113, to the ''tank fuel volume'' defined in § 86.082–2. The fuel shall be stabilized to a temperature within 3 °F of the lab ambient before beginning the driving cycle for the exhaust emission test.

(k) The Administrator may conduct the vehicle preparation and preconditioning for measurement of fuel economy or exhaust emissions according to the procedures specified in §§ 86.132–90 and 86.133–90, in lieu of the procedures specified in this section.

(l) Vehicles to be tested for exhaust emissions only shall be processed according to §§ 86.135 through 86.137. Vehicles to be tested for evaporative emissions shall be processed in accordance with the procedures in §§ 86.133 through 86.138, starting with § 86.135.

(m) Vehicles to be tested for evaporative emissions with the supplemental two-diurnal test sequence described in § 86.130–96, shall proceed according to §§ 86.135 through 86.137, followed by the supplemental hot soak test (see § 86.138–96(k)) and the supplemental diurnal emission test (see § 86.133–96(p)).

(n) With prior approval of the Administrator, manufacturers may use an alternative canister loading method in

lieu of the applicable canister loading method described in the provisions of paragraphs (h), (j)(1) and (j)(2) of this section, provided the alternative method is shown to be equivalent or result in a more fully loaded canister (a canister that has adsorbed an equal or greater amount of hydrocarbon vapors) than the applicable canister loading method required by the provisions of paragraphs (h), (j)(1) and (j)(2) of this section. Additionally, the Administrator may conduct confirmatory certification testing and in-use testing using the alternative canister loading method used by the manufacturer to test applicable certification and/or in-use vehicles or the appropriate method outlined in the provisions of paragraphs (h), (j)(1) and (j)(2) of this section.

[58 FR 16037, Mar. 24, 1993, as amended at 59 FR 16296, Apr. 6, 1994; 59 FR 48509, Sept. 21, 1994; 60 FR 43895, Aug. 23, 1995; 64 FR 23922, May 4, 1999; 70 FR 72927, Dec. 8, 2005]

§ 86.133–90 Diurnal breathing loss test.

(a)(1) Following vehicle preparation and vehicle preconditioning procedures described in §§ 86.131 and 86.132 the test vehicle shall be allowed to soak for a period of not less than 12 or more than 36 hours prior to the exhaust emission test. The diurnal test shall start not less than 10 or more than 35 hours after the end of the preconditioning procedure. The start of the exhaust test shall follow the end of the diurnal test within one hour.

(2) Gasoline-fueled and methanol-fueled vehicles to be tested for exhaust emissions only shall undergo the diurnal heat build. Since no evaporative measurements are necessary, an evaporative enclosure is not required.

(b) The evaporative emission enclosure shall be purged for several minutes immediately prior to the test.

NOTE: If at any time the concentration of hydrocarbons, of methanol or of methanol and hydrocarbons exceeds 15,000 ppm C the enclosure should be immediately purged. The concentration provides a 4:1 safety factor of hydrocarbons and methanol against the lean flammability limit.

(c) The FID (or HFID) hydrocarbon analyzer shall be zeroed and spanned immediately prior to the test.

(d) Impingers charged with known volumes of pure deionized water shall be placed in the methanol sampling system (methanol-fueled vehicles only).

(e) If not already on, evaporative enclosure mixing fan shall be turned on at this time.

(f) Immediately prior to the diurnal breathing loss test, the fuel tank(s) of the prepared vehicle shall be drained and recharged with the specified test fuel, § 86.113, to the prescribed ''tank fuel volume,'' defined in § 86.078–2. The temperature of the fuel prior to its delivery to the fuel tank shall be between 45° and 60 °F (7.2 °C and 16 °C). The fuel tank cap(s) is not installed until the diurnal heat build begins.

(g) The test vehicle, with the engine shut off, shall be moved into the evaporative emission enclosure, the test vehicle windows and luggage compartment(s) shall be opened, the fuel tank temperature sensor shall be connected to the temperature recording system, and, if required, the heat source shall be properly positioned with respect to the fuel tank(s) and/or connected to the temperature controller.

(h) The temperature recording system shall be started.

(i) The fuel may be artificially heated to the starting diurnal temperature.

(j) When the fuel temperature recording system reaches at least 58 °F (14 °C), immediately:

(1) Install fuel tank cap(s).

(2) Turn off purge blowers, if not already off at this time.

(3) Close and seal enclosure doors.

(k) When the fuel temperature recording system reaches 60°±2 °F (16°±1.1 °C), immediately:

(1) Analyze enclosure atmosphere for hydrocarbons and record. This is the initial (time = 0 minutes) hydrocarbon concentration, C_{HCi}, § 86.143.

(2) Simultaneously with initiation of the hydrocarbon analysis, initiate collection of the methanol sample by drawing a sample from the enclosure through the sampling system for four minutes. This is the initial methanol measurement from which methanol concentration C_{CH3OHi} and mass are calculated. Remove impingers and replace with freshly charged clean impingers which will be used to collect the final methanol sample.

(3) Start diurnal heat build and record time. This commences the 60±2 minute test period.

(l) The fuel shall be heated in such a way that its temperature change conforms to the following function to within ±3 °F (±1.6 °C):

(1) $F = T_o + 0.4t$.

(2) For SI units, $C = T_o + (2/9)t$.

Where:

(3) F = fuel temperature, °F.

(4) C = fuel temperature, °C.

(5) t = time since beginning of test, minutes.

(6) T_o = initial temperature.

After 60±2 minutes of heating, the fuel temperature rise shall be 24°±1 °F (13.4 °C±0.5 °C).

(m) The FID hydrocarbon analyzer shall be zeroed and spanned immediately prior to the end of the diurnal test.

(n) The end of the diurnal breathing loss test occurs 60±2 minutes after the heat build begins, paragraph (j)(2). Analyze the enclosure atmosphere for hydrocarbons and record. This is the final (time = 60 minutes) hydrocarbon concentration, C_{HCf}, § 86.143. The time (or elapsed time) of this analysis shall be recorded.

(o) Simultaneously with the start of the hydrocarbon analysis, initiate collection of the methanol sample. Sample for 4.0±0.5 minutes. This is the final methanol sample.

(p) *Alternate method for methanol sampling*. Since sample times of longer than four minutes may be necessary in order to collect an adequate and representative sample of methanol at the end of a test (when SHED concentrations are usually increasing rapidly), it may be necessary to rapidly collect the methanol sample in a bag and then bubble the bag sample through the impingers at the specified flow rate. The time elapsed between collection of the bag sample and flowing through the impingers should be minimized in order to prevent any losses. This alternative must be adopted if the four minute sample period is inadequate to collect a sample of sufficient concentration to allow accurate GC analysis.

(q) Once the final methanol sample has been collected, the heat source shall be turned off and the enclosure doors unsealed and opened.

(r) The heat source shall be moved away from the vehicle, if required, and/or disconnected from the temperature controller, the fuel tank temperature sensor shall be disconnected from the temperature recording system, the test vehicle windows and luggage compartments may be closed and the test vehicle, with the engine shut off, shall be removed from the evaporative emission enclosure.

(s) For vehicles with multiple tanks, the largest tank shall be designated as the primary tank and shall be heated in accordance with the procedures described in paragraph (1) of this section. All other tanks shall be designated as auxiliary tanks and shall undergo a similar heat build such that the fuel temperature shall be within 3 °F (1.6 °C) of the primary tank.

[54 FR 14528, Apr. 11, 1989]

§ 86.133–96 Diurnal emission test.

(a)(1) The diurnal emission test for gasoline-, methanol- and gaseous-fueled vehicles consists of three 24-hour test cycles following the hot soak test. Emissions are measured for each 24-hour cycle, with the highest emission level used to determine compliance with the standards specified in subpart A of this part. The Administrator may truncate a test after any 24-hour cycle without affecting the validity of the collected data. Sampling of emissions from the running loss and hot soak tests is not required as preparation for the diurnal emission test. The diurnal emission test may be conducted as part of either the three- diurnal test sequence or the supplemental two-diurnal test sequence, as described in § 86.130–96.

(2) For the full three-diurnal test sequence, the diurnal emission test outlined in paragraphs (b) through (o) of this section follows the high-temperature hot soak test concluded in § 86.138–96(j).

(3) For the supplemental two-diurnal test sequence, the diurnal emission test outlined in paragraph (p) of this section follows the alternate hot soak test specified in § 86.138–96(k). This test is not required for gaseous-fueled vehicles.

(b) The test vehicle shall be soaked for not less than 6 hours nor more than 36 hours between the end of the hot soak test and the start of the diurnal emission test. For at least the last 6 hours of this period, the vehicle shall be soaked at 72°±3 °F. The temperature tolerance may be waived for up to 10 minutes to allow purging of the enclosure or transporting the vehicle into the enclosure at the beginning of the diurnal emission test.

(c) The test vehicle shall be exposed to ambient temperatures cycled according to the profile specified in § 86.133 and appendix II of this part.

(1) Temperatures measured with the underbody temperature sensor shall follow the profile with a maximum deviation of 3 °F at any time and an average temperature deviation not to exceed 2 °F, where the average deviation is calculated using the absolute value of each measured deviation. In addition, the temperature from the sidewall temperature sensors shall follow the profile with a maximum deviation of 5 °F at any time.

(2) Ambient temperatures shall be measured at least every minute. Temperature cycling shall begin when time=0 minutes, as specified in paragraph (i)(5) of this section.

(d) The diurnal enclosure shall be purged for several minutes prior to the test. WARNING: If at any time the concentration of hydrocarbons, of methanol or of methanol and hydrocarbons exceeds 15,000 ppm C the enclosure should be immediately purged. This concentration provides at least a 4:1 safety factor against the lean flammability limit.

(e) The test vehicle, with the engine shut off and the test vehicle windows and luggage compartment(s) opened, shall be moved into the diurnal enclosure.

(f)–(g) [Reserved]

(h) Prior to sampling for emissions and throughout the period of cycled ambient temperatures, the mixing fan(s) shall circulate the air at a rate of 0.8±0.2 cfm per cubic foot of ambient volume. The mixing fan(s), plus any additional fans if needed, shall also maintain a minimum wind speed of 5 mph (8 km/hr) under the fuel tank of the test vehicle. The Administrator may adjust fan speed and location to ensure sufficient air circulation around the fuel tank. The wind speed requirement may be satisfied by consistently using a fan configuration that has been demonstrated to maintain a broad 5-mph air flow in the vicinity of the vehicle's fuel tank, subject to verification by the Administrator.

(i) Emission sampling may begin as follows:

(1) The FID (or HFID) hydrocarbon analyzer shall be zeroed and spanned immediately prior to the sampling.

(2) Impingers charged with known volumes of pure deionized water shall be placed in the methanol sampling system (methanol-fueled vehicles only).

(3) Turn off purge blowers (if not already off).

(4) Close and seal enclosure doors (if not already closed and sealed).

(5) Within 10 minutes of closing and sealing the doors, analyze enclosure atmosphere for hydrocarbons and record. This is the initial (time=0 minutes) hydrocarbon concentration, C_{HCi}, required in § 86.143. Hydrocarbon emissions may be sampled continuously during the test period.

(6) Analyze the enclosure atmosphere for methanol, if applicable, and record. The methanol sampling must start simultaneously with the initiation of the hydrocarbon analysis and continue for 4.0±0.5 minutes. This is the initial methanol concentration, C_{CH_3OHi}, required in § 86.143. Record the time elapsed during this analysis. If the 4-minute sample period is inadequate to collect a sample of sufficient concentration to allow accurate GC analysis, rapidly collect the methanol sample in a bag and then bubble the bag sample through the impingers at the specified flow rate. The time elapsed between collection of the bag sample and flow through the impingers should be minimized to prevent any losses. If the test is conducted in a fixed-volume enclosure that allows airflow into and out of the enclosure, the effect of makeup air dilution must be factored into the analysis.

(j) If testing indicates that a vehicle design may result in fuel temperature responses during enclosure testing that

are not representative of in-use summertime conditions, the Administrator may adjust air circulation and temperature during the test as needed to ensure that the test sufficiently duplicates the vehicle's in-use experience.

(k) The FID (or HFID) hydrocarbon analyzer shall be zeroed and spanned immediately prior to the end of each emission sampling period.

(l) Fresh impingers shall be installed in the methanol collection system immediately prior to the end of each emission measurement, if applicable.

(m) The end of the first, second, and third emission sampling period shall occur 1440±6, 2880±6, 4320±6 minutes, respectively, after the beginning of the initial sampling, as specified in paragraph (i)(5) of this section.

(1) At the end of each emission sampling period, analyze the enclosure atmosphere for hydrocarbons and record. This is the final hydrocarbon concentration, C_{HCf}, required in § 86.143. The emission measurement at the end of each period becomes the initial hydrocarbon concentration, C_{HCi}, of the next emission sampling period.

(2) Analyze the enclosure atmosphere for methanol, if applicable, and record. The methanol sampling must start simultaneously with the initiation of the hydrocarbon analysis and continue for 4.0±0.5 minutes. This is the final (time=1440 minutes) methanol concentration, C_{CH_3OHf}, required in § 86.143. Record the time elapsed during this analysis. If the 4-minute sample period is inadequate to collect a sample of sufficient concentration to allow accurate GC analysis, rapidly collect the methanol sample in a bag and then bubble the bag sample through the impingers at the specified flow rate. The time elapsed between collection of the bag sample and flow through the impingers should be minimized to prevent any losses. If the test is conducted in a fixed-volume enclosure that allows airflow into and out of the enclosure, the effect of makeup air dilution must be factored into the analysis.

(n) At the end of the temperature cycling period the enclosure doors shall be unsealed and opened, the test vehicle windows and luggage compartments may be closed and the test vehicle, with the engine shut off, shall be removed from the enclosure.

(o) This completes the full three-diurnal evaporative emission test sequence described in § 86.130–96.

(p) For the supplemental two-diurnal test sequence described in § 86.130–96, the following steps shall be performed in lieu of the steps described in paragraphs (b) through (n) of this section.

(1) For the supplemental two-diurnal test sequence, the test vehicle shall be soaked for not less than 6 hours nor more than 36 hours between the end of the hot soak test described in § 86.138–96(k), and the start of the two-diurnal emission test. For at least the last 6 hours of this period, the vehicle shall be soaked at 72±3 °F.

(2) The vehicle shall be tested for diurnal emissions according to the procedures specified in paragraphs (c) through (n) of this section, except that the test includes only two 24-hour periods. Therefore the end of the first and second emission sampling periods shall occur 1440±6 and 2880±6 minutes, respectively, after the initial sampling.

(3) This completes the supplemental two-diurnal test sequence for evaporative emission measurement.

[58 FR 16039, Mar. 24, 1993, as amended at 59 FR 48509, Sept. 21, 1994; 60 FR 43896, Aug. 23, 1995]

§ 86.134–96 Running loss test.

(a) *Overview.* Gasoline- and methanol-fueled vehicles are to be tested for running loss emissions during simulated high-temperature urban driving; this test is not required for gaseous-fueled vehicles. During operation, tank temperatures are controlled according to a prescribed profile to simulate in-use conditions. If the vehicle is determined to have exceeded the standard before the end of the running loss test, the test may be terminated without invalidating the data. The test can be run either in a sealed enclosure or with the point-source method, as specified in paragraph (g) of this section. Measurement of vapor temperature is optional during the running loss test; however, if testing by the Administrator shows that a vehicle has exceeded an emission standard without measurement of vapor temperatures, the manufacturer

may, utilizing its own resources, conduct subsequent testing on that vehicle to determine if the exceedance is attributable to inadequate control of vapor temperatures.

(b) *Driving schedule*. Conduct the running loss test by operating the test vehicle through one Urban Dynamometer Driving Schedule (UDDS), a 2-minute idle, two New York City Cycles, another 2-minute idle, another UDDS, then another 2-minute idle (see §86.115 and appendix I of this part). Fifteen seconds after the engine starts, place the transmission in gear. Twenty seconds after the engine starts, begin the initial vehicle acceleration of the driving schedule. The transmission shall be operated according to the specifications of §86.128 during the driving cycles.

(c) *Dynamometer Operation*. (1) The exhaust from the vehicle must be routed outside the test cell or enclosure. Exhaust gases may, but need not, be collected and sampled.

(2) Provisions of §86.135–90(c) shall apply.

(3) Practice runs over the prescribed driving schedule may not be performed at test point.

(4) Provisions of §86.135–90 (e) and (f) shall apply.

(5) If the dynamometer horsepower must be adjusted manually, it shall be set within 1 hour prior to the running loss test phase. The test vehicle shall not be used to make this adjustment. Dynamometers using automatic control of preselectable power settings may be set any time prior to the beginning of the emissions test.

(6) Dynamometer roll or shaft revolutions shall be used to determine the actual driving distance for the running loss test, D_{RL}, required in §86.143. The revolutions shall be measured on the same roll or shaft used for measuring the vehicle's speed.

(7) Provisions of §86.135–90(i) shall apply.

(8) The test run may be stopped if a warning light or gauge indicates that the vehicle's engine coolant has overheated.

(d) *Engine Starting and Restarting*. (1) Provisions of §86.136–90(a) shall apply.

(2) If the vehicle does not start after the manufacturer's recommended cranking time (or 10 continuous seconds in the absence of a manufacturer's recommendation), cranking shall cease for the period recommended by the manufacturer (or 10 seconds in the absence of a manufacturer's recommendation). This may be repeated for up to three start attempts. If the vehicle does not start after three attempts, the reason for failure to start shall be determined. If failure to start is an operational error, the vehicle shall be rescheduled for testing, starting with the soak period immediately preceding the running loss test.

(3) If failure to start is caused by a vehicle malfunction, corrective action of less than 30 minutes duration may be taken (according to §86.090–25), and the test continued, provided that the ambient conditions to which the vehicle is exposed are maintained at 95±5 °F (35±3 °C). When the engine starts, the timing sequence of the driving schedule shall begin. If failure to start is caused by vehicle malfunction and the vehicle cannot be started, the test shall be voided, the vehicle removed from the dynamometer, and corrective action may be taken according to §86.090–25. The reason for the malfunction (if determined) and the corrective action taken shall be reported to the Administrator.

(4) Provisions of §86.136–90(e) shall apply.

(e) *Pressure checks*. No pressure checks of the evaporative system shall be allowed. Under no circumstances will any changes/repairs to the evaporative emissions control system be allowed.

(f) *Temperature stabilization*. Immediately after the hot transient exhaust emission test, the vehicle shall be soaked in a temperature controlled area for a maximum of 6 hours until the fuel temperature is stabilized. The fuel may be heated or cooled to stabilize fuel temperatures, but the fuel heating rate must not exceed 5 °F in any 1-hour interval during the soak period. A manufacturer may use a faster heating rate or a longer period for stabilizing fuel temperatures if the needed heating cannot be easily accomplished in the 6-hour period, subject to Administrator approval.

(1) Fuel temperatures must be held at 95 ±3 °F for at least one hour before the start of the running loss test.

(2) If a vehicle's fuel temperature profile has an initial temperature lower than 95 °F, as described in § 86.129–94(d)(7)(v), the fuel in the test vehicle must be stabilized to within 3 °F of that temperature for at least one hour before the start of the running loss test.

(g) *Running loss test*. The running loss test may be conducted either by the enclosure method, or by the point-source method.

(1) *Enclosure method*. (i) The running loss enclosure shall be purged for several minutes immediately prior to the test. WARNING: If at any time the concentration of hydrocarbons, of methanol, or of methanol and hydrocarbons exceeds 15,000 ppm C the enclosure should be immediately purged. This concentration provides at least a 4:1 safety factor against the lean flammability limit.

(ii) The FID hydrocarbon analyzer shall be zeroed and spanned immediately prior to the test.

(iii) If not already on, the running loss enclosure mixing fan(s) shall be turned on at this time. Throughout the test, the mixing fan(s) shall circulate the air at a rate of at least 1.0 cfm per cubic foot of ambient volume.

(iv) The test vehicle, with the engine off, shall be moved onto the dynamometer in the running loss enclosure. The vehicle engine compartment cover shall be unlatched, but closed as much as possible, allowing for the air intake equipment specified in paragraph (g)(1)(vii) of this section. The vehicle engine compartment cover may be closed if alternate routing is found for the air intake equipment. Any windows, doors, and luggage compartments shall be closed. A window may be opened to direct cooling air into the passenger compartment of the vehicle, if the vehicle is not equipped with its own air conditioning.

(v) Fans shall be positioned as described in §§ 86.107–96 (d) and (h).

(vi) The vehicle air conditioning system (if so equipped) shall be set to the ''normal'' air conditioning mode and adjusted to the minimum discharge air temperature and high fan speed. Vehicles equipped with automatic temperature controlled air conditioning systems shall be set to operate in ''automatic'' temperature and fan modes with the system set at 72 °F.

(vii) Connect the air intake equipment to the vehicle, if applicable. This connection shall be made to minimize leakage.

(viii) The temperature and pressure recording systems shall be started. Measurement of vapor temperature is optional during the running loss test. If vapor temperature is not measured, fuel tank pressure need not be measured.

(ix) Turn off purge blowers (if not already off).

(x) The temperature of the liquid fuel shall be monitored and recorded at least every 15 seconds with the temperature recording system specified in § 86.107–96(e).

(xi) Close and seal the enclosure doors.

(xii) When the ambient temperature is 95±5 °F (35±3 °C) and the fuel has been stabilized according to paragraph (f) of this section, the running loss test may begin. Measure the initial ambient temperature and pressure.

(A) Analyze enclosure atmosphere for hydrocarbons and record. This is the initial (time=0 minutes) hydrocarbon concentration, C_{HCi}, required in § 86.143. Hydrocarbon emissions may be sampled continuously during the test period.

(B) Analyze the enclosure atmosphere for methanol, if applicable, and record. The methanol sampling must start simultaneously with the initiation of the hydrocarbon analysis and continue for 4.0±0.5 minutes. This is the initial (time=0 minutes) methanol concentration, C_{CH_3OHi}, required in § 86.143. Record the time elapsed during this analysis. If the 4-minute sample period is inadequate to collect a sample of sufficient concentration to allow accurate GC analysis, rapidly collect the methanol sample in a bag and then bubble the bag sample through the impingers at the specified flow rate. The time elapsed between collection of the bag sample and flow through the impingers should be minimized to prevent any losses.

(xiii) Start the engine and begin operation of the vehicle over the drive cycle specified in paragraph (b) of this section.

(xiv) The ambient temperature shall be maintained at 95±5 °F (95±2 °F on average) during the running loss test, measured at the inlet to the cooling fan in front of the vehicle; it shall be recorded at least every 60 seconds.

(xv) The fuel temperature during the dynamometer drive shall be controlled to match the fuel tank temperature profile determined in § 86.129. Measured fuel temperatures must be within ±3 °F of the target profile throughout the test run. Vapor temperatures, if measured, must be within ±5 °F of the target profile during the first 4186 seconds of the running loss test, and within ±3 °F for the remaining 120 seconds of the test run. For any vehicle complying with the test standards, vapor temperatures may be higher than the specified tolerances without invalidating test results. For testing by the Administrator, vapor temperatures may be lower than the specified tolerances without invalidating test results. If the test vehicle has more than one fuel tank, the temperatures for both fuel tanks shall follow the target profiles determined in § 86.129. The control system shall be tuned and operated to provide smooth and continuous tank temperature profiles that are representative of the on-road profiles.

(xvi) Tank pressure shall not exceed 10 inches of water at any time during the running loss test unless a pressurized system is used and the manufacturer demonstrates that vapor would not be vented to the atmosphere upon fuel cap removal. A vehicle may exceed the pressure limit for temporary periods during the running loss test, up to 10 percent of the total driving time, provided that the vehicle has demonstrated conformance with the pressure limit during the entire outdoor driving period specified in § 86.129. Measurement of fuel tank pressures will be considered valid only if vapor temperatures are measured and controlled to the tolerances specified in paragraph (g)(1)(xv) of this section.

(xvii) The FID (or HFID) hydrocarbon analyzer shall be zeroed and spanned immediately prior the end of the test.

(xviii) Fresh impingers shall be installed in the methanol collection system immediately prior to the end of the test, if applicable.

(xix) The running loss test ends with the completion of the third 2-minute idle period.

(xx) At the end of the running loss test:

(A) Analyze the enclosure atmosphere for hydrocarbons and record. This is the final hydrocarbon concentration, C_{HCf}, required in § 86.143.

(B) Analyze the enclosure atmosphere for methanol, if applicable, and record. The methanol sampling must start prior to the end of the test and continue for 4.0±0.5 minutes. The methanol sampling must be completed within 2 minutes after the end of the running loss test. This is the final methanol concentration, C_{CH_3OHf}, required in § 86.143. Record the time elapsed during this analysis. If the 4-minute sample period is inadequate to collect a sample of sufficient concentration to allow accurate GC analysis, rapidly collect the methanol sample in a bag and then bubble the bag sample through the impingers at the specified flow rate. The time elapsed between collection of the bag sample and flow through the impingers should be minimized to prevent any losses.

(C) Turn off all the fans specified in § 86.107–96(d). Also, the time that the vehicle's engine compartment cover is open for removal of air intake equipment, if applicable, shall be minimized to avoid loss of heat from the engine compartment.

(xxi) Turn off any CVS apparatus (if not already turned off).

(2) *Point-source method.* (i) The test vehicle, with the engine off, shall be moved onto the dynamometer. The vehicle engine compartment cover and any windows, doors, and luggage compartments shall be closed.

(ii) Fans shall be positioned as described in §§ 86.135–90(b) and 86.107–96(d).

(iii) The running loss vapor vent collection system shall be properly positioned at the potential fuel vapor vents or leaks of the vehicle's fuel system. Typical vapor vents for current fuel

systems are the ports of the evaporative emission canister and the pressure relief vent of the fuel tank (typically integrated into the fuel tank cap).

(iv) The running loss vapor vent collection system may be connected to a PDP-CVS or CFV-CVS bag collection system. Otherwise, running loss vapors shall be sampled continuously with analyzers meeting the requirements of § 86.107–96(b).

(v) Fans shall be positioned as described in § 86.107–96(d).

(vi) The vehicle air conditioning system (if so equipped) shall be set to the ''normal'' air conditioning mode and adjusted to the minimum discharge air temperature and high fan speed. Vehicles equipped with automatic temperature controlled air conditioning systems shall be set to operate in ''automatic'' temperature and fan modes with the system set at 72 °F.

(vii) The temperature and pressure recording systems shall be started. Measurement of vapor temperature is optional during the running loss test. If vapor temperature is not measured, fuel tank pressure need not be measured.

(viii) The temperature of the liquid fuel shall be monitored and recorded at least every 15 seconds with the temperature recording system specified in § 86.107–96(e).

(ix) When the ambient temperature is 95±5 °F (35±3 °C) and the fuel tank temperature is 95±3 °F the running loss test may begin.

(x) The ambient temperature shall be maintained at 95±5 °F (95±2 °F on average) during the running loss test, measured at the inlet to the cooling fan in front of the vehicle; it shall be recorded at least every 60 seconds.

(xi) Fuel temperatures shall be controlled according to the specifications of paragraph (g)(1)(xv) of this section.

(xii) The tank pressure requirements described in paragraph (g)(1)(xvi) of this section apply also to running loss testing by the point source method.

(xiii) The running loss test ends with completion of the third 2-minute idle period.

(xiv) If emissions are collected in bags, the sample bags must be analyzed within 20 minutes of their respective sample collection phases, as described in § 86.137–94(b)(15). The results of the analysis are used in § 86.143 to calculate the mass of hydrocarbons emitted.

(xv) At the end of the running loss test, turn off all the fans specified in § 86.107–96(d).

(3) With prior approval of the Administrator, manufacturers may use an alternative running loss test procedure, provided the alternative test procedure is shown to yield equivalent or superior emission results (in terms of quality control, accuracy and repeatability) for the running loss, hot soak and diurnal portions of the three diurnal-plus-hot-soak test sequence. Additionally, the Administrator may conduct certification and in-use testing using the test procedures outlined in paragraph (g)(1) of this section, paragraph (g)(2) of this section or the alternative running loss test procedure as approved for a specific vehicle.

(h) Following the completion of the running loss drive, the vehicle may be tested for hot soak emissions as specified in § 86.138–96.

[58 FR 16040, Mar. 24, 1993, as amended at 59 FR 48510, Sept. 21, 1994; 60 FR 43896, Aug. 23, 1995; 70 FR 72927, Dec. 8, 2005]

§ 86.135–00 Dynamometer procedure.

Section 86.135–00 includes text that specifies requirements that differ from § 86.135–90 and § 86.135–94. Where a paragraph in § 86.135–90 or § 86.135–94 is identical and applicable to § 86.135–00, this may be indicated by specifying the corresponding paragraph and the statement ''[Reserved]. For guidance see § 86.135–90.'' or ''[Reserved]. For guidance see § 86.135–94.''

(a) [Reserved]. For guidance see § 86.135–94.

(b)–(c) [Reserved]. For guidance see § 86.135–90.

(d) Practice runs over the prescribed driving schedule may be performed at test point, provided an emission sample is not taken, for the purpose of finding the appropriate throttle action to maintain the proper speed-time relationship, or to permit sampling system adjustment. Both smoothing of speed variations and excessive accelerator pedal perturbations are to be avoided. When using two-roll dynamometers a truer speed-time trace may be obtained

by minimizing the rocking of the vehicle in the rolls; the rocking of the vehicle changes the tire rolling radius on each roll. This rocking may be minimized by restraining the vehicle horizontally (or nearly so) by using a cable and winch.

(e)–(i) [Reserved]. For guidance see § 86.135–90.

[61 FR 54894, Oct. 22, 1996]

§ 86.135–90 Dynamometer procedure.

(a) *Overview*—(1) *Gasoline-fueled and methanol-fueled Otto-cycle vehicles.* The dynamometer run consists of two tests, a ''cold'' start test after a minimum 12-hour and a maximum 36-hour soak according to the provisions of §§ 86.132 and 86.133, and a ''hot'' start test following the ''cold'' start test by 10 minutes. Engine startup (with all accessories turned off), operation over the UDDS and engine shutdown make a complete cold start test. Engine startup and operation over the first 505 seconds of the driving schedule complete the hot start test. The exhaust emissions are diluted with ambient air and a continuously proportional sample is collected for analysis during each phase. The composite samples collected in bags are analyzed for hydrocarbon, carbon monoxide, carbon dioxide, and oxides of nitrogen. A parallel sample of the dilution air is similarly analyzed for hydrocarbon, carbon monoxide, carbon dioxide, and oxides of nitrogen. Methanol and formaldehyde samples (exhaust and dilution air) are collected and analyzed for methanol-fueled vehicles (a single dilution air formaldehyde sample covering the total time of the test may be collected in place of three individual samples). Methanol and formaldehyde samples may be omitted for 1990 through 1994 model years when a FID calibrated on methanol is used.

(2) *Petroleum-fueled and methanol-fueled diesel vehicles.* The dynamometer run consists of two tests, a ''cold'' start test after a minimum 12-hour and a maximum 36-hour soak according to the provisions of §§ 86.132 and 86.133, and a ''hot'' start test following the ''cold'' start by 10 minutes. Engine startup (with all accessories turned off), operation over the UDDS, and engine shutdown make a complete cold start test. Engine startup and operation over the first 505 seconds of the driving schedule complete the hot start test. The exhaust emissions are diluted with ambient air in the dilution tunnel as shown in Figure B90–5 and Figure B90–6. Six particulate samples are collected on filters for weighing; the first sample plus back-up is collected during the first 505 seconds of the cold start test; the second sample plus back-up is collected during the remainder of the cold start test (including shutdown); the third sample plus back-up is collected during the hot start test. Continuous proportional samples of gaseous emissions are collected for analysis during each test phase. For petroleum-fueled vehicles, the composite samples collected in bags are analyzed for carbon monoxide, carbon dioxide, and oxides of nitrogen. Hydrocarbons from petroleum-fueled vehicles are sampled and analyzed continuously according to the provisions of § 86.110. Parallel samples of the dilution air are similarly analyzed for hydrocarbon, carbon monoxide, carbon dioxide, and oxides of nitrogen. For methanol-fueled vehicles, bag samples are collected and analyzed for hydrocarbons, carbon monoxide, carbon dioxide, and oxides of nitrogen. Methanol and formaldehyde samples are taken for both exhaust emissions and dilution air (a single dilution air formaldehyde sample, covering the total test period may be collected). Methanol and formaldehyde samples may be omitted for 1990 through 1994 model years when an FID calibrated on methanol is used. Parallel bag samples of dilution air are analyzed for hydrocarbons, carbon monoxide, carbon dioxide, and oxides of nitrogen.

(b) During dynamometer operation, a fixed speed cooling fan shall be positioned so as to direct cooling air to the vehicle in an appropriate manner with the engine compartment cover open. In the case of vehicles with front engine compartments, the fan shall be squarely positioned within 12 inches (30.5 centimeters) of the vehicle. In the case of vehicles with rear engine compartments (or if special designs make the above impractical), the cooling fan shall be placed in a position to provide sufficient air to maintain vehicle cooling. The fan capacity shall normally

not exceed 5300 cfm (2.50 m^3/s). If, however, the manufacturer can show that during field operation the vehicle receives additional cooling, and that such additional cooling is needed to provide a representative test, the fan capacity may be increased or additional fans used if approved in advance by the Administrator.

(c) The vehicle speed as measured from the dynamometer rolls shall be used. A speed *vs.* time recording, as evidence of dynamometer test validity, shall be supplied on request of the Administrator.

(d) Practice runs over the prescribed driving schedule may be performed at test point, provided an emission sample is not taken, for the purpose of finding the minimum throttle action to maintain the proper speed-time relationship, or to permit sampling system adjustment.

NOTE: When using two-roll dynamometers a truer speed-time trace may be obtained by minimizing the rocking of the vehicle in the rolls; the rocking of the vehicle changes the tire rolling radius on each roll. This rocking may be minimized by restraining the vehicle horizontally (or nearly so) by using a cable and winch.

(e) The drive wheel tires may be inflated up to a gauge pressure of 45 psi (310 kPa) in order to prevent tire damage. The drive wheel tire pressure shall be reported with the test results.

(f) lf the dynamometer has not been operated during the 2-hour period immediately preceding the test, it shall be warmed up for 15 minutes by operating at 30 mph (48 kph) using a non-test vehicle or as recommended by the dynamometer manufacturer.

(g) If the dynamometer horsepower must be adjusted manually, it shall be set within 1 hour prior to the exhaust emissions test phase. The test vehicle shall not be used to make this adjustment. Dynamometers using automatic control of preselectable power settings may be set anytime prior to the beginning of the emissions test.

(h) The driving distance, as measured by counting the number of dynamometer roll or shaft revolutions, shall be determined for the transient cold start, stabilized cold start, and transient hot start phases of the test. The revolutions shall be measured on the same roll or shaft used for measuring the vehicle's speed.

(i) Four-wheel drive and all-wheel drive vehicles may be tested either in a four-wheel drive or a two-wheel drive mode of operation. In order to test in the two-wheel drive mode, four-wheel drive and all-wheel drive vehicles may have one set of drive wheels disengaged; four-wheel and all-wheel drive vehicles which can be shifted to a two-wheel mode by the driver may be tested in a two-wheel drive mode of operation.

[54 FR 14529, Apr. 11, 1989, as amended at 70 FR 72927, Dec. 8, 2005]

§ 86.135–94 Dynamometer procedure.

Section 86.135–94 includes text that specifies requirements that differ from § 86.135–90. Where a paragraph in § 86.135–90 is identical and applicable to § 86.135–94, this may be indicated by specifying the corresponding paragraph and the statement ''[Reserved]. For guidance see § 86.135–90.'' Where a corresponding paragraph of § 86.135–90 is not applicable, this is indicated by the statement ''[Reserved].''

(a) *Overview.* The dynamometer run consists of two tests, a ''cold'' start test, after a minimum 12-hour and a maximum 36-hour soak according to the provisions of §§ 86.132 and 86.133, and a ''hot'' start test following the ''cold'' start by 10 minutes. Engine startup (with all accessories turned off), operation over the UDDS and engine shutdown make a complete cold start test. Engine startup and operation over the first 505 seconds of the driving schedule complete the hot start test. The exhaust emissions are diluted with ambient air in the dilution tunnel as shown in Figure B94–5 and Figure B94–6. A dilution tunnel is not required for testing vehicles waived from the requirement to measure particulates. Six particulate samples are collected on filters for weighing; the first sample plus backup is collected during the first 505 seconds of the cold start test; the second sample plus backup is collected during the remainder of the cold start test (including shutdown); the third sample plus backup is collected during the hot start test. Continuous proportional samples of gaseous emissions are collected for analysis during each test

phase. For gasoline-fueled, natural gas-fueled and liquefied petroleum gas-fueled Otto-cycle vehicles, the composite samples collected in bags are analyzed for THC, CO, CO_2, CH_4 and NO_X. For petroleum-fueled diesel-cycle vehicles (optional for natural gas-fueled, liquefied petroleum gas-fueled and methanol-fueled diesel-cycle vehicles), THC is sampled and analyzed continuously according to the provisions of § 86.110. Parallel samples of the dilution air are similarly analyzed for THC, CO, CO_2, CH_4 and NO_X. For natural gas-fueled, liquefied petroleum gas-fueled and methanol-fueled vehicles, bag samples are collected and analyzed for THC (if not sampled continuously), CO, CO_2, CH_4 and NO_X. For methanol-fueled vehicles, methanol and formaldehyde samples are taken for both exhaust emissions and dilution air (a single dilution air formaldehyde sample, covering the total test period may be collected). Parallel bag samples of dilution air are analyzed for THC, CO, CO_2, CH_4 and NO_X. Methanol and formaldehyde samples may be omitted for 1990 through 1994 model years when a FID calibrated on methanol is used.

(b)–(i) [Reserved]. For guidance see § 86.135–90.

[56 FR 25775, June 5, 1991, as amended at 59 FR 48510, Sept. 21, 1994]

§ 86.136–90 Engine starting and restarting.

(a) *Otto-cycle vehicles.* Paragraph (a) of this section applies to Otto-cycle vehicles.

(1) The engine shall be started according to the manufacturer's recommended starting procedures in the owner's manual. The initial 20-second idle period shall begin when the engine starts.

(2) *Choke operation:* (i) Vehicles equipped with automatic chokes shall be operated according to the manufacturer's operating instructions in the owner's manual, including choke setting and ''kick-down'' from cold fast idle.

(ii) Vehicles equipped with manual chokes shall be operated according to the manufacturer's operating instructions in the owner's manual.

(3) The transmission shall be placed in gear 15 seconds after the engine is started. If necessary, braking may be employed to keep the drive wheels from turning.

(4) The operator may use the choke, accelerator pedal, etc., where necessary to keep the engine running.

(5) If the manufacturer's operating instructions in the owner's manual do not specify a warm engine starting procedure, the engine (automatic and manual-choke engines) shall be started by depressing the accelerator pedal about half way and cranking the engine until it starts.

(b) *Diesel vehicles.* The engine shall be started according to the manufacturers recommended starting procedures in the owners manual. The initial 20-second idle period shall begin when the engine starts. The transmission shall be placed in gear 15 seconds after the engine is started. If necessary, braking may be employed to keep the drive wheels from turning.

(c) If the vehicle does not start after the manufacturer's recommended cranking time (or 10 continuous seconds in the absence of a manufacturer's recommendation), cranking shall cease for the period recommended by the manufacturer (or 10 seconds in the absence of a manufacturer's recommendation). This may be repeated for up to three start attempts. If the vehicle does not start after three attempts, the reason for failure to start shall be determined. The gas flow measuring device on the constant volume sampler (usually a revolution counter) or CFV (and the hydrocarbon integrator and particulate sampling system when testing petroleum-fueled diesel vehicles and the particulate sampling system when testing methanol-fueled diesel vehicles, see § 86.137) shall be turned off and the sampler selector valves, including the methanol sampler, placed in the ''standby'' position during this diagnostic period. In addition, either the CVS should be turned off, or the exhaust tube disconnected from the tailpipe during the diagnostic period. If failure to start is an operational error, the vehicle shall be rescheduled for testing from a cold start.

(d) If the engine ''false starts'' the operator shall repeat the recommended

starting procedure (such as resetting the choke, etc.).

(e) *Stalling:* (1) If the engine stalls during an idle period, the engine shall be restarted immediately and the test continued. If the engine cannot be started soon enough to allow the vehicle to follow the next acceleration as prescribed, the driving schedule indicator shall be stopped. When the vehicle restarts, the driving schedule indicator shall be reactivated.

(2) If the engine stalls during some operating mode other than idle, the driving schedule indicator shall be stopped, the vehicle shall then be restarted and accelerated to the speed required at that point in the driving schedule and the test continued. During acceleration to this point, shifting shall be performed in accordance with § 86.128.

(3) If the vehicle will not restart within one minute, the test shall be voided, the vehicle removed from the dynamometer, corrective action taken, and the vehicle rescheduled for test. The reason for the malfunction (if determined) and the corrective action taken shall be reported to the Administrator.

[54 FR 14530, Apr. 11, 1989, as amended at 58 FR 16042, Mar. 24, 1993; 59 FR 48510, Sept. 21, 1994]

§ 86.137–90 Dynamometer test run, gaseous and particulate emissions.

(a) *General*—(1) *Gasoline-fueled and methanol-fueled Otto-cycle vehicles.* The vehicle shall be allowed to stand with the engine turned off for a period of not less than 12 hours or more than 36 hours before the cold start exhaust emission test. The cold start exhaust test shall follow the diurnal breathing loss test by not more than one hour. The vehicle shall be stored prior to the emission test in such a manner that precipitation (*e.g.*, rain or dew) does not occur on the vehicle. The complete dynamometer test consists of a cold start drive of 7.5 miles (12.1 km) and simulates a hot start drive of 7.5 miles (12.1 km). The vehicle is allowed to stand on the dynamometer during the 10 minute time period between the cold and hot start tests. The cold start test is divided into two periods. The first period, representing the cold start ''transient'' phase, terminates at the end of the deceleration which is scheduled to occur at 505 seconds of the driving schedule. The second period, representing the ''stabilized'' phase, consists of the remainder of the driving schedule including engine shutdown. The hot start test, similarly, consists of two periods. The first period, representing the hot start ''transient'' phase, terminates at the same point in driving schedule as the first period of the cold start test. The second period of the hot start test, ''stabilized'' phase, is assumed to be identical to the second period of the cold start test. Therefore, the hot start test terminates after the first period (505 seconds) is run.

(2) *Petroleum-fueled and methanol-fueled diesel vehicles.* The vehicle shall be allowed to stand with the engine turned off for a period of not less than 12 hours or more than 36 hours before the cold start exhaust emission test. The vehicle shall be stored prior to the emission test in such a manner that precipitation (*e.g.*, rain or dew) does not occur on the vehicle. The complete dynamometer test consists of a cold start drive of 7.5 miles (12.1 km), and simulates a hot start drive of 7.5 miles (12.1 km). The vehicle is allowed to stand on the dynamometer during the 10 minute time period between the cold and hot start tests. The cold start test is divided into two periods. The first period, representing the cold start ''transient'' phase, terminates at the end of the deceleration which is scheduled to occur at 505 seconds of the driving schedule. The second period, representing the ''stabilized'' phase, consists of the remainder of the driving schedule including engine shutdown. The hot start test, similarly, consists of two periods. The first period, representing the start of the ''transient'' phase, terminates at the same point in the driving schedule as the first period of the cold start test. The second period of the hot start test, ''stabilized'' phase, is assumed to be identical to the second period of the cold start test. Therefore, the hot start test terminates after the first period (505 seconds) is run.

(b) The following steps shall be taken for each test:

(1) Place drive wheels of vehicle on dynamometer without starting engine.

(2) Open the vehicle engine compartment cover and position the cooling fan.

(3) For all vehicles, with the sample selector valves in the ''standby'' position, connect evacuated sample collection bags to the dilute exhaust and dilution air sample collection systems.

(4) For methanol-fueled vehicles, with the sample selector valves in the ''standby'' position, insert fresh sample collection impingers into the methanol sample collection system, the formaldehyde sample collection system and fresh impingers (or capsules for formaldehyde) into the dilution air sample collection systems for methanol and formaldehyde (may be omitted for 1990 through 1994 model years).

(5) Start the CVS (if not already on), the sample pumps (except the diesel particulate sample pump, if applicable), the temperature recorder, the vehicle cooling fan, and the heated hydrocarbon analysis recorder (diesels only). (The heat exchanger of the constant volume sampler, if used, petroleum-fueled diesel hydrocarbon analyzer continuous sample line and filter, methanol-fueled vehicle hydrocarbon, methanol and formaldehyde sample lines, if applicable, should be preheated to their respective operating temperatures before the test begins.)

(6) Adjust the sample flow rates to the desired flow rate and set the gas flow measuring devices to zero.

(i) For gaseous bag samples (except hydrocarbon samples), the minimum flow rate is 0.17 cfm (0.08 l/sec).

(ii) For hydrocarbon samples, the minimum FID (or HFID in the case of diesel- and methanol-fueled Otto-cycle vehicles) flow rate is 0.066 cfm (0.031 l/sec).

(iii) For methanol samples, the minimum flow rate is 0.14 cfm (0.067 l/sec).

(iv) For formaldehyde samples, the minimum flow rate is 0.036 cfm (0.017 l/s) with capsule collector and 0.14 cfm (0.067 l/s) with impinger.

NOTE: CFV sample flow rate is fixed by the venturi design.

(7) Attach the exhaust tube to the vehicle tailpipe(s).

(8) Carefully install a particulate sample filter into each of the filter holders for diesel vehicle tests. The filters must be handled only with forceps or tongs. Rough or abrasive filter handling will result in erroneous weight determination.

(9) Start the gas flow measuring device, position the sample selector valves to direct the sample flow into the ''transient'' exhaust sample bag, the ''transient'' methanol exhaust sample, the ''transient'' formaldehyde exhaust sample, the ''transient'' dilution air sample bag, the ''transient'' methanol dilution air sample and the ''transient'' formaldehyde dilution air sample (turn on the petroleum-fueled diesel hydrocarbon analyzer system integrator, mark the recorder chart, start particulate sample pump No. 1, and record both gas meter or flow measurement instrument readings, if applicable), turn the key on, and start cranking the engine.

(10) Fifteen seconds after the engine starts, place the transmission in gear.

(11) Twenty seconds after the engine starts, begin the initial vehicle acceleration of the driving schedule.

(12) Operate the vehicle according to the Urban Dynamometer Driving Schedule (§ 86.115).

NOTE: During diesel vehicle testing, adjust the flow rate through the particulate sample probe to maintain a constant value within ±5 percent of the set flow rate. Record the average temperature and pressure at the gas meter or flow instrument inlet. If the set flow rate cannot be maintained because of high particulate loading on the filter, the test shall be terminated. The test shall be rerun using a lower flow rate, or larger diameter filter, or both.

(13) At the end of the deceleration which is scheduled to occur at 505 seconds, simultaneously switch the sample flows from the ''transient'' bags and samples to the ''stabilized'' bags and samples, switch off gas flow measuring device No. 1, switch off the No. 1 petroleum-fueled diesel hydrocarbon integrator and the No. 1 particulate sample pump, mark the petroleum-fueled diesel hydrocarbon recorder chart, and close valves isolating particulate filter No. 1, if applicable, and start gas flow measuring device No. 2, and start the petroleum-fueled diesel hydrocarbon integrator No. 2 and the No. 2 particulate sample pump and

open valves isolating particulate filter No. 2, if applicable. Before the acceleration which is scheduled to occur at 510 seconds, record the measured roll or shaft revolutions and reset the counter or switch to a second counter. As soon as possible transfer the ''transient'' exhaust and dilution air samples to the analytical system and process the samples according to § 86.140 obtaining a stabilized reading of the bag exhaust sample on all analyzers within 20 minutes of the end of the sample collection phase of the test. Obtain methanol and formaldehyde sample analyses, if applicable, within 24 hours of the end of the sample collection phase of the test.

(14) Turn the engine off 2 seconds after the end of the last deceleration (at 1,369 seconds).

(15) Five seconds after the engine stops running, simultaneously turn off gas flow measuring device No. 2 and if applicable, turn off the petroleum-fueled diesel hydrocarbon integrator No. 2, mark the hydrocarbon recorder chart, turn off the No. 2 particulate sample pump and close the valves isolating particulate filter No. 2, and position the sample selector valves to the ''standby'' position (and open the valves isolating particulate filter No. 1, if applicable). Record the measured roll or shaft revolutions (both gas meter or flow measurement instrumentation readings), and re-set the counter. As soon as possible, transfer the ''stabilized'' exhaust and dilution air samples to the analytical system and process the samples according to § 86.140, obtaining a stabilized reading of the exhaust bag sample on all analyzers within 20 minutes of the end of the sample collection phase of the test. Obtain methanol and formaldehyde sample analyses, if applicable, within 24 hours of the end of the sample period. If applicable, carefully remove both pairs of particulate sample filters from their respective holders, and place each in a separate petri dish, and cover.

(16) Immediately after the end of the sample period, turn off the cooling fan and close the engine compartment cover.

(17) Turn off the CVS or disconnect the exhaust tube from the tailpipe(s) of the vehicle.

(18) Repeat the steps in paragraphs (b)(2) through (b)(2) of this section for the hot start test, except only two evacuated sample bags, two methanol sample impingers, two formaldehyde sample impingers, and one pair of particulate sample filters, as appropriate, are required. The step in paragraph (b)(9) of this section shall begin between 9 and 11 minutes after the end of the sample period for the cold start test.

(19) At the end of the deceleration which is scheduled to occur at 505 seconds, simultaneously turn off gas flow measuring device No. 1 (and the petroleum-fueled diesel hydrocarbon integrator No. 1, mark the petroleum-fueled diesel hydrocarbon recorder chart and turn off the No. 1 particulate sample pump, if applicable) and position the sample selector valve to the ''standby'' position. (Engine shutdown is not part of the hot start test sample period.) Record the measured roll or shaft revolutions (and the No. 1 gas meter reading or flow measurement instrument). (Carefully remove the third pair of particulate sample filters from its holder and place in a clean petri dish and cover, if applicable.)

(20) As soon as possible, transfer the hot start ''transient'' exhaust and dilution air samples to the analytical system and process the samples according to § 86.140, obtaining a stabilized reading of the exhaust bag sample on all analyzers within 20 minutes of the end of the sample collection phase of the test. Obtain methanol and formaldehyde sample analyses, if applicable, within 24 hours of the end of the sample period. (If it is not possible to perform analysis on the methanol and formaldehyde samples, within 24 hours, the samples should be stored in a dark cold (4–10 °C) environment until analysis. The samples should be analyzed within fourteen days.)

(21) As soon as possible, and in no case longer than one hour after the end of the hot start phase of the test, transfer the six particulate filters to the weighing chamber for post-test conditioning, if applicable.

(22) Disconnect the exhaust tube from the vehicle tailpipe(s) and drive the vehicle from dynamometer.

(23) The CVS or CFV may be turned off, if desired.

(24) Vehicles to be tested for evaporative emissions will proceed according to § 86.138. For all others this completes the test sequence.

[54 FR 14530, Apr. 11, 1989, as amended at 60 FR 34347, June 30, 1995]

§ 86.137–94 Dynamometer test run, gaseous and particulate emissions.

Section 86.137–94 includes text that specifies requirements that differ from § 86.137–90. Where a paragraph in § 86.137–90 is identical and applicable to § 86.137–94, this may be indicated by specifying the corresponding paragraph and the statement ''[Reserved]. For guidance see § 86.137–90.'' Where a corresponding paragraph of § 86.137–90 is not applicable, this is indicated by the statement ''[Reserved].''

(a) *General*. The dynamometer run consists of two tests, a cold start test, after a minimum 12-hour and a maximum 36-hour soak according to the provisions of § 86.132, and a hot start test following the cold start test by 10 minutes. The vehicle shall be stored prior to the emission test in such a manner that precipitation (*e.g.*, rain or dew) does not occur on the vehicle. The complete dynamometer test consists of a cold start drive of 7.5 miles (12.1 km) and simulates a hot start drive of 7.5 miles (12.1 km). The vehicle is allowed to stand on the dynamometer during the 10 minute time period between the cold and hot start tests. The cold start test is divided into two periods. The first period, representing the cold start ''transient'' phase, terminates at the end of the deceleration which is scheduled to occur at 505 seconds of the driving schedule. The second period, representing the ''stabilized'' phase, consists of the remainder of the driving schedule including engine shutdown. The hot start test, similarly, consists of two periods. The first period, representing the hot start ''transient'' phase, terminates at the same point in driving schedule as the first period of the cold start test. The second period of the hot start test, ''stabilized'' phase, is assumed to be identical to the second period of the cold start test. Therefore, the hot start test terminates after the first period (505 seconds) is run.

(b) The following steps shall be taken for each test:

(1) Place drive wheels of vehicle on dynamometer without starting engine.

(2) Open the vehicle engine compartment cover and position the cooling fan.

(3) For all vehicles, with the sample selector valves in the ''standby'' position, connect evacuated sample collection bags to the dilute exhaust and dilution air sample collection systems.

(4) For methanol-fueled vehicles, with the sample selector valves in the ''standby'' position, insert fresh sample collection impingers into the methanol sample collection system, fresh impingers or a fresh cartridge into the formaldehyde sample collection system and fresh impingers (or a single cartridge for formaldehyde) into the dilution air sample collection systems for methanol and formaldehyde (background measurements of methanol and formaldehyde may be omitted and concentrations assumed to be zero for calculations in § 86.144).

(5) Start the CVS (if not already on), the sample pumps (except the particulate sample pump, if applicable), the temperature recorder, the vehicle cooling fan, and the heated THC analysis recorder (diesel-cycle only). (The heat exchanger of the constant volume sampler, if used, petroleum-fueled diesel-cycle THC analyzer continuous sample line and filter, methanol-fueled vehicle THC, methanol and formaldehyde sample lines, if applicable, should be preheated to their respective operating temperatures before the test begins).

(6) Adjust the sample flow rates to the desired flow rate and set the gas flow measuring devices to zero.

(i) For gaseous bag samples (except THC samples), the minimum flow rate is 0.17 cfm (0.08 l/sec).

(ii) For THC samples, the minimum FID (or HFID in the case of diesel-cycle and methanol-fueled Otto-cycle vehicles) flow rate is 0.066 cfm (0.031 l/sec).

(iii) For methanol samples, the flow rates shall be set such that the system meets the design criteria of § 86.109 and § 86.110. For samples in which the concentration in the primary impinger exceeds 0.5 mg/l, it is recommended that

the mass of methanol collected in the secondary impinger not exceed ten percent of the total mass collected. For samples in which the concentration in the primary impinger does not exceed 0.5 mg/l, analysis of the secondary impingers is not necessary.

(iv) For formaldehyde samples, the flow rates shall be set such that the system meets the design criteria of § 86.109 and § 86.110. For impinger samples in which the concentration of formaldehyde in the primary impinger exceeds 0.1 mg/l, it is recommended that the mass of formaldehyde collected in the secondary impinger not exceed ten percent of the total mass collected. For samples in which the concentration in the primary impinger does not exceed 0.1 mg/l, analysis of the secondary impingers is not necessary.

(7) Attach the exhaust tube to the vehicle tailpipe(s).

(8) Carefully install a particulate sample filter into each of the filter holders. The filters must be handled only with forceps or tongs. Rough or abrasive filter handling will result in erroneous weight determination.

(9) Start the gas flow measuring device, position the sample selector valves to direct the sample flow into the ''transient'' exhaust sample bag, the ''transient'' methanol exhaust sample, the ''transient'' formaldehyde exhaust sample, the ''transient'' dilution air sample bag, the ''transient'' methanol dilution air sample and the ''transient'' formaldehyde dilution air sample (turn on the petroleum-fueled diesel-cycle THC analyzer system integrator, mark the recorder chart, start particulate sample pump No. 1, and record both gas meter or flow measurement instrument readings, if applicable), turn the key on, and start cranking the engine.

(10) Fifteen seconds after the engine starts, place the transmission in gear.

(11) Twenty seconds after the engine starts, begin the initial vehicle acceleration of the driving schedule.

(12) Operate the vehicle according to the Urban Dynamometer Driving Schedule (§ 86.115).

NOTE: During particulate testing, adjust the flow rate through the particulate sample probe to maintain a constant value within ±5 percent of the set flow rate. Record the average temperature and pressure at the gas meter or flow instrument inlet. If the set flow rate cannot be maintained because of high particulate loading on the filter, the test shall be terminated. The test shall be rerun using a lower flow rate, or larger diameter filter, or both.

(13) At the end of the deceleration which is scheduled to occur at 505 seconds, simultaneously switch the sample flows from the ''transient'' bags and samples to the ''stabilized'' bags and samples, switch off gas flow measuring device No. 1, switch off the No. 1 petroleum-fueled diesel hydrocarbon integrator and the No. 1 particulate sample pump, mark the petroleum-fueled diesel hydrocarbon recorder chart, and close valves isolating particulate filter No. 1, if applicable, start gas flow measuring device No. 2, and start the petroleum-fueled diesel hydrocarbon integrator No. 2 and the No. 2 particulate sample pump and open valves isolating particulate filter No. 2, if applicable. Before the acceleration which is scheduled to occur at 510 seconds, record the measured roll or shaft revolutions and reset the counter or switch to a second counter. As soon as possible transfer the ''transient'' exhaust and dilution air samples to the analytical system and process the samples according to § 86.140 obtaining a stabilized reading of the bag exhaust sample on all analyzers within 20 minutes of the end of the sample collection phase of the test. Obtain methanol and formaldehyde sample analyses, if applicable, within 24 hours of the end of the sample collection phase of the test.

(14) Turn the engine off 2 seconds after the end of the last deceleration (at 1,369 seconds).

(15) Five seconds after the engine stops running, simultaneously turn off gas flow measuring device No. 2 and if applicable, turn off the hydrocarbon integrator No. 2, mark the hydrocarbon recorder chart, turn off the No. 2 particulate sample pump and close the valves isolating particulate filter No. 2, and position the sample selector valves to the ''standby'' position (and open the valves isolating particulate filter No. 1, if applicable). Record the measured roll or shaft revolutions (both gas meter or flow measurement instrumentation readings), and reset the counter.

As soon as possible, transfer the ''stabilized'' exhaust and dilution air samples to the analytical system and process the samples according to § 86.140, obtaining a stabilized reading of the exhaust bag sample on all analyzers within 20 minutes of the end of the sample collection phase of the test. Obtain methanol and formaldehyde sample analyses, if applicable, within 24 hours of the end of the sample period. (If it is not possible to perform analysis on the methanol and formaldehyde samples within 24 hours, the samples should be stored in a dark cold (4–10 °C) environment until analysis. The samples should be analyzed within fourteen days.) If applicable, carefully remove both pairs of particulate sample filters from their respective holders, and place each in a separate petri dish, and cover.

(b)(16)–(b)(24) [Reserved]. For guidance see § 86.137–90.

[56 FR 25776, June 5, 1991, as amended at 60 FR 34347, June 30, 1995]

§ 86.137–96 Dynamometer test run, gaseous and particulate emissions.

Section 86.137–96 includes text that specifies requirements that differ from those specified in §§ 86.137–90 and 86.137–94. Where a paragraph in § 86.137–90 or § 86.137–94 is identical and applicable to § 86.137–96, this may be indicated by specifying the corresponding paragraph and the statement ''[Reserved]. For guidance see § 86.137–90.'' or ''[Reserved]. For guidance see § 86.137–94.''

(a)–(b)(15) [Reserved]. For guidance see § 86.137–94.

(b)(16)–(b)(23) [Reserved]. For guidance see § 86.137–90.

(b)(24) Vehicles to be tested for evaporative emissions will proceed according to § 86.134; vehicles to be tested with the supplemental two-diurnal test sequence for evaporative emissions will proceed according to § 86.138–96(k). For all others this completes the test sequence.

[58 FR 16042, Mar. 24, 1993]

§ 86.138–90 Hot-soak test.

The hot-soak evaporative emission test shall be conducted immediately following the hot transient exhaust emission test.

(a) Prior to the completion of the hot-start transient exhaust emission sampling period, the evaporative emission enclosure shall be purged for several minutes.

(b) The enclosure doors shall be closed and sealed within two minutes of engine shutdown and within seven minutes after the end of the exhaust emission test. The steps after the end of the driving cycle should be done as quickly as possible to minimize the time needed to start the hot soak test.

(c) Fresh impingers shall be installed in the methanol sample collection system immediately prior to the start of the test, if applicable.

(d) If not already on, the evaporative enclosure mixing fan shall be turned on at this time.

(e) Upon completion of the hot transient exhaust emission sampling period, the vehicle engine compartment cover shall be closed, the cooling fan shall be moved, the vehicle shall be disconnected from the dynamometer and exhaust sampling system, and then driven at minimum throttle to the vehicle entrance of the enclosure.

(f) The vehicle's engine must be stopped before any part of the vehicle enters the enclosure. The vehicle may be pushed or coasted into the enclosure.

(g) The test vehicle windows and luggage compartments shall be opened, if not already open.

(h) The temperature recording system shall be started and the time of engine shut off shall be noted on the evaporative emission hydrocarbon recording system.

(i) The enclosure doors shall be closed and sealed within two minutes of engine shutdown and within five minutes after the end of the exhaust emission test.

(j) The 60±0.5 minute hot soak begins when the enclosure doors are sealed. The enclosure atmosphere shall be analyzed for hydrocarbon and recorded. This is initial (time = 0 minutes) hydrocarbon concentration, C_{HCi}, for use in calculating evaporative losses, see § 86.143. The ''zero'' time methanol sample shall be collected starting at the same time as the hydrocarbon analysis is started. Sampling should continue for four minutes.

(k) The test vehicle shall be permitted to soak for a period of one hour in the enclosure.

(l) The FID (or HFID) hydrocarbon analyzer shall be zeroed and spanned immediately prior to the end of the test.

(m) Fresh impingers shall be installed in the methanol collection system immediately prior to the end of the test, if applicable.

(n) At the end of the 60±0.5 minute test period, again analyze the enclosure atmosphere for hydrocarbons and methanol, as described in § 86.138–90(j), and record time. These analyses provide the final (time = 60 minutes) hydrocarbon concentration, C_{HCf}, and the final methanol level for use in calculating evaporative losses, see § 86.143. This operation completes the evaporative emission measurement procedure.

(o) *Alternate method for methanol sampling*. Since sample times of longer than four minutes may be necessary in order to collect an adequate and representative sample of methanol at the end of a test (when SHED concentrations are usually increasing rapidly), it may be necessary to rapidly collect the methanol sample in a bag and then bubble the bag sample through the impingers at the specified flow rate. The time elapsed between collection of the bag sample and flowing through the impingers should be minimized in order to prevent any losses. This alternative must be adopted if the four minute sample period is inadequate to collect a sample of sufficient concentration to allow accurate GC analysis.

[54 FR 14532, Apr. 11, 1989, as amended at 58 FR 16042, Mar. 24, 1993; 60 FR 43897, Aug. 23, 1995]

§ 86.138–96 Hot soak test.

(a)(1) *Gasoline- and methanol-fueled vehicles*. For gasoline- and methanol-fueled vehicles, the hot soak test shall be conducted immediately following the running loss test. However, sampling of emissions from the running loss test is not required as preparation for the hot soak test.

(2) *Gaseous-fueled vehicles*. Since gaseous-fueled vehicles are not required to perform a running loss test, the hot soak test shall be conducted within seven minutes after completion of the hot start exhaust test.

(b) The hot soak test may be conducted in the running loss enclosure as a continuation of that test or in a separate enclosure.

(1) If the hot soak test is conducted in the running loss enclosure, the driver may exit the enclosure after the running loss test. If exiting, the driver should use the personnel door described in § 86.107–96(a)(2), exiting as quickly as possible with a minimum disturbance to the system. The final hydrocarbon and methanol concentration for the running loss test, measured in § 86.134–96(g)(1)(xx), shall be the initial hydrocarbon and methanol concentration (time=0 minutes) C_{HCi} and C_{CH_3OHi}, for the hot soak test.

(2) If the vehicle must be moved to a different enclosure, the following steps must be taken:

(i) The enclosure for the hot soak test shall be purged for several minutes prior to completion of the running loss test. WARNING: If at any time the concentration of hydrocarbons, of methanol, or of methanol and hydrocarbons exceeds 15,000 ppm C the enclosure should be immediately purged. This concentration provides at least a 4:1 safety factor against the lean flammability limit.

(ii) The FID hydrocarbon analyzer shall be zeroed and spanned immediately prior to the test.

(iii) Fresh impingers shall be installed in the methanol sample collection system immediately prior to the start of the test, if applicable.

(iv) If not already on, the mixing fan(s) shall be turned on at this time. Throughout the hot soak test, the mixing fan(s) shall circulate the air at a rate of 0.8±0.2 cfm per cubic foot of the nominal enclosure volume.

(v) Begin sampling as follows:

(A) Analyze the enclosure atmosphere for hydrocarbons and record. This is the initial (time = 0 minutes) hydrocarbon concentration, C_{HCi}, required in § 86.143. Hydrocarbon emissions may be sampled continuously during the test period.

(B) Analyze the enclosure atmosphere for methanol, if applicable, and record. The methanol sampling must

start simultaneously with the initiation of the hydrocarbon analysis and continue for 4.0±0.5 minutes. This is the initial (time=0 minutes) methanol concentration, C_{CH_3OHi}, required in § 86.143. Record the time elapsed during this analysis. If the 4-minute sample period is inadequate to collect a sample of sufficient concentration to allow accurate GC analysis, rapidly collect the methanol sample in a bag and then bubble the bag sample through the impingers at the specified flow rate. The time elapsed between collection of the bag sample and flow through the impingers should be minimized to prevent any losses.

(vi) The vehicle engine compartment cover shall be closed (if not already closed), the cooling fan shall be moved, the vehicle shall be disconnected from the dynamometer and any sampling system, and then driven at minimum throttle to the enclosure for the hot soak test. These steps should be done as quickly as possible to minimize the time needed to start the hot soak test.

(vii) The vehicle's engine must be stopped before any part of the vehicle enters the enclosure.

(viii) The vehicle shall enter the enclosure; the enclosure doors shall be closed and sealed within 2 minutes of engine shutdown and within seven minutes after the end of the running loss test.

(ix) The test vehicle windows and any luggage compartments shall be opened (if not already open). The vehicle engine compartment cover shall be closed (if not already closed).

(c) [Reserved]

(d) The temperature recording system shall be started and the time of engine shutoff shall be noted on the evaporative emission hydrocarbon data recording system.

(e) For the first 5 minutes of the hot soak test, the ambient temperature shall be maintained at 95±10 °F. For the remainder of the hot soak test, the ambient temperature shall be maintained at 95±5 °F (95±2 °F on average).

(f) The 60±0.5 minute hot soak begins when the enclosure doors are sealed (or when the running loss test ends, if the hot soak test is conducted in the running loss enclosure).

(g) The FID (or HFID) hydrocarbon analyzer shall be zeroed and spanned immediately prior to the end of the test.

(h) Fresh impingers shall be installed in the methanol collection system immediately prior to the end of the test, if applicable.

(i) [Reserved]

(j) At the end of the 60±0.5 minute test period:

(1) Analyze the enclosure atmosphere for hydrocarbons and record. This is the final (time=60 minutes) hydrocarbon concentration, C_{HCf}, required in § 86.143.

(2) Analyze the enclosure atmosphere for methanol and record, if applicable. The methanol sampling must start simultaneously with the initiation of the hydrocarbon analysis and continue for 4.0±0.5 minutes. This is the final (time=60 minutes) methanol concentration, C_{CH_3OHf}, required in § 86.143. Record the time elapsed during this analysis. If the 4-minute sample period is inadequate to collect a sample of sufficient concentration to allow accurate GC analysis, rapidly collect the methanol sample in a bag and then bubble the bag sample through the impingers at the specified flow rate. The time elapsed between collection of the bag sample and flow through the impingers should be minimized to prevent any losses.

(k) For the supplemental two-diurnal test sequence (see § 86.130–96), the hot soak test described in § 86.138–90 shall be conducted immediately following the hot transient exhaust emission test. This test requires ambient temperatures between 68° and 86 °F at all times. The equipment and calibration specifications of §§ 86.107–90 and 86.117–90 may apply for this testing. Enclosures meeting the requirements of §§ 86.107–96 and 86.117–96 may also be used. This hot soak test is followed by two consecutive diurnal heat builds, described in § 86.133–96(p).

(l) If the vehicle is to be tested for diurnal emissions, follow the procedure outlined in § 86.133–96.

[58 FR 16042, Mar. 24, 1993, as amended at 59 FR 48510, Sept. 21, 1994; 60 FR 43897, Aug. 23, 1995]

§ 86.139–90 Particulate filter handling and weighing.

(a) At least 8 hours, but not more than 56 hours before the test, place each filter in an open, but protected, petri dish and place in the weighing chamber which meets the humidity and temperature specifications of § 86.112.

(b) At the end of the 8 to 56 hour stabilization period, weigh the filter on a balance having a precision of one microgram. Record this weight. This reading is the tare weight.

(c) The filter shall then be stored in a covered petri dish which shall remain in the weighing chamber until needed for testing.

(d)(1) If the filter is not used within one hour of its removal from the weighing chamber, it shall be reweighed.

(2) The one hour limit may be replaced by an eight-hour limit if one or both of the following conditions are met:

(i) A stabilized filter is placed and kept in a sealed filter holder assembly with the ends plugged, or

(ii) A stabilized filter is placed in a sealed filter holder assembly, which is then immediately placed in a sample line through which there is no flow.

(e) After the test, and after the sample filter is returned to the weighing room, condition it for at least 1 hour but not more than 56 hours. Then weigh a second time. This latter reading is the gross weight of the filter. Record this weight.

(f) The net weight (P_e) is the gross weight minus the tare weight.

NOTE: Should the sample on the filter contact the petri dish or any other surface, the test is void and must be rerun.

[54 FR 14532, Apr. 11, 1989]

§ 86.140–82 Exhaust sample analysis.

The following sequence of operations shall be performed in conjunction with each series of measurement Y:

(a) For CO, CO_2, NO_X and gasoline HC:

(1) Zero the analyzers and obtain a stable zero reading. Recheck after tests.

(2) Introduce span gases and set instrument gains. In order to avoid errors, span and calibrate at the same flow rates used to analyze the test sample. Span gases should have concentrations equal to 75 to 100 percent of full scale. If gain has shifted significantly on the analyzers, check the calibrations. Show actual concentrations on chart.

(3) Check zeros; repeat the procedure in paragraphs (a) (1) and (2) of this section if required.

(4) Check flow rates and pressures.

(5) Measure HC, CO, CO_2 and NO_X concentrations of samples.

(6) Check zero and span points. If difference is greater than 2 percent of full scale, repeat the procedure in paragraphs (a) (1) through (5) of this section.

(b) For diesel HC:

(1) Zero HFID analyzer and obtain a stable zero reading.

(2) Introduce span gas and set instrument gains. Span gas should have concentration equal to 75 to 100 percent of full scale.

(3) Check zero as in paragraph (b)(1) of this section.

(4) Introduction of zero and span gas into the analyzer can be accomplished by either of the following methods:

(i) Close heated valve in HC sample (see Figures B82–3 or B82–4), and allow gases to enter HFID. Extreme care should be taken not to introduce gases under high pressure.

(ii) Connect zero and span line directly to HC sample probe and introduce gases at a flow rate greater than 125 percent of the HFID flow rate with the CVS blower operating (see figures B82–3A or B82–4A). Excess flow must be allowed to exit probe inlet.

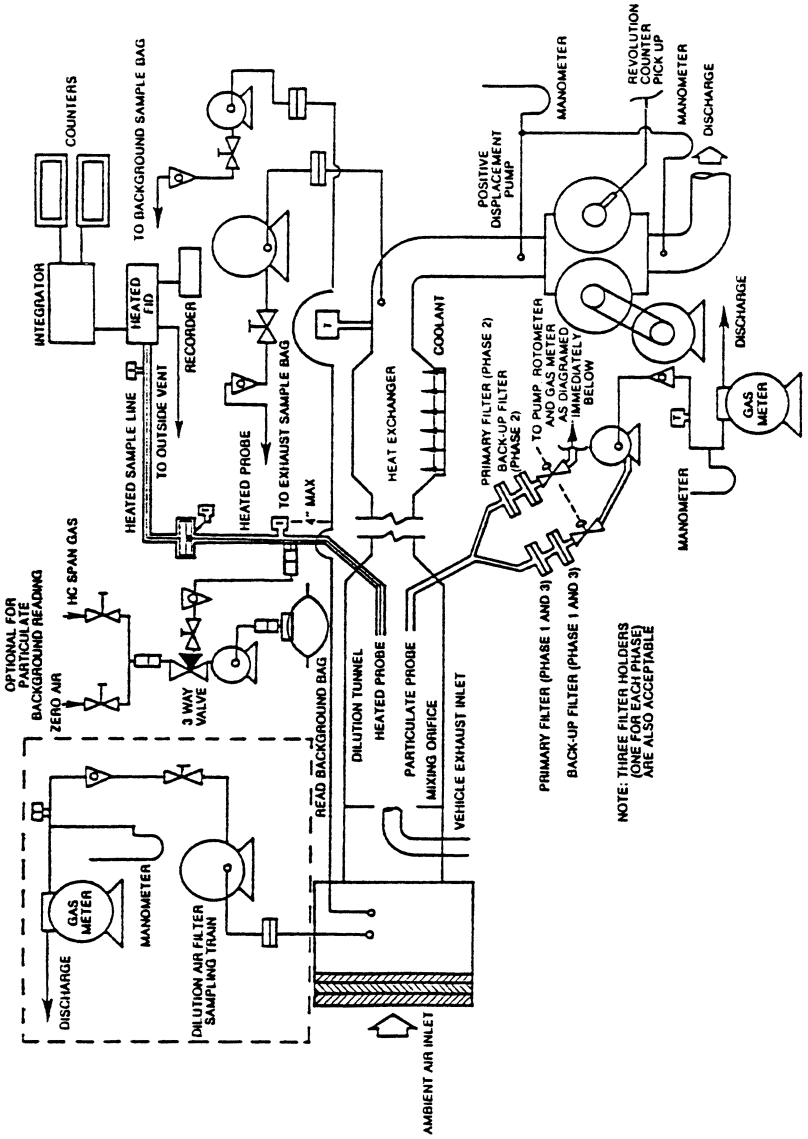

FIGURE B82-3A
GASEOUS AND PARTICULATE EMISSIONS SAMPLING SYSTEM (PDP-CVS)
(FOR DIESEL VEHICLES ONLY)

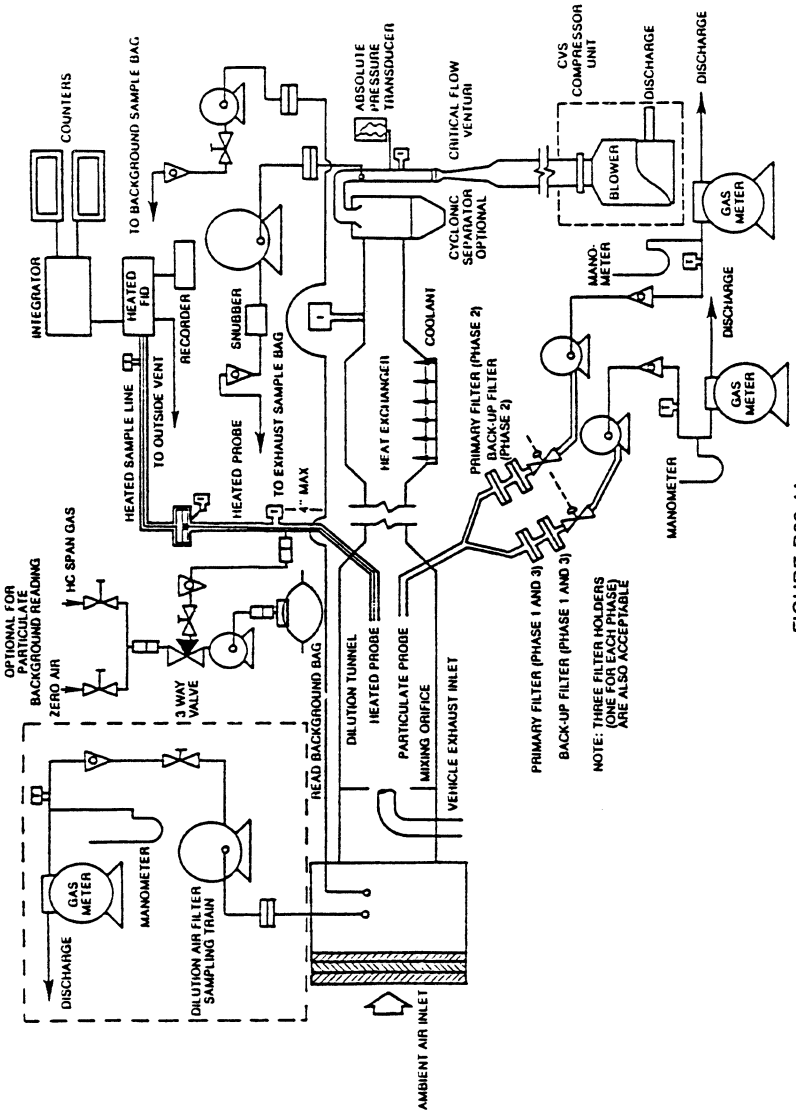

FIGURE B82-4A
GASEOUS AND PARTICULATE EMISSIONS SAMPLING SYSTEM (CFV-CVS)
(FOR DIESEL VEHICLES ONLY)

NOTE: In order to minimize errors, HFID flow rate and pressure during zero and span (and background bag reading) must be exactly the same as that used during testing.

(5) Continuously record (integrate electronically if desired) dilute hydrocarbon emissions levels during test. Background samples are collected in sample bags and analyzed as in paragraph (4)(i) or (4)(ii) of this section.

(6) Check zero and span as in paragraph (b)(1) through (b)(4)(i) or (4)(ii) of this section. If difference is greater than 2 percent of full scale, void test and check for HC ''hangup'' or electronic drift in analyzer.

[45 FR 14520, Mar. 5, 1980, as amended at 54 FR 2122, Jan. 19, 1989]

§ 86.140–90 Exhaust sample analysis.

The following sequence of operations shall be performed in conjunction with each series of measurements:

(a) For CO, CO_2, NO_X. and for Otto-cycle and methanol-fueled diesel vehicle HC:

(1) Zero the analyzers and obtain a stable zero reading. Recheck after tests.

(2) Introduce span gases and set instrument gains. In order to avoid errors, span and calibrate at the same flow rates used to analyze the test sample. Span gases should have concentrations equal to 75 to 100 percent of full scale. If gain has shifted significantly on the analyzers, check the calibrations. Show actual concentrations on chart.

(3) Check zeroes; repeat the procedure in paragraphs (1) and (2) of this section if required.

(4) Check flow rates and pressures.

(5) Measure HC, CO, CO_2, and NO_X concentrations of samples.

(6) Check zero and span points. If difference is greater than 2 percent of full scale, repeat the procedure in paragraphs (a) (1) through (5) of this section.

(b) For petroleum-fueled diesel vehicle HC:

(1) Zero HFID analyzer and obtain a stable zero reading.

(2) Introduce span gas and set instrument gains. Span gas should have concentration equal to 75 to 100 percent of full scale.

(3) Check zero as in (b)(1) of this section.

(4) Introduction of zero and span gas into the analyzer can be accomplished by either of the following methods:

(i) Close heated valve in HC sample (see Figures B90–5 or B90–6), and allow gases to enter HFID. Extreme care should be taken not to introduce gases under high pressure.

(ii) Connect zero and span line directly to HC sample probe and introduce gases at a flow rate greater than 125 percent of the HFID flow rate with the CVS blower operating (see Figures B90–5 or B90–6). Excess flow must be allowed to exit probe inlet.

NOTE: In order to minimize errors, HFID flow rate and pressure during zero and span (and background bag reading) must be exactly the same as that used during testing.

(5) Continuously record (integrate electronically if desired) dilute hydrocarbon emissions levels during test. Background samples are collected in sample bags and analyzed as in paragraphs (b)(4) (i) or (ii) of this section.

(6) Check zero and span as in paragraphs (b)(1) through (b)(4) (i) or (ii) of this section. If difference is greater than 2 percent of full scale, void test and check for HC ''hangup'' or electronic drift in analyzer.

(c) For CH_30H (methanol-fueled vehicles):

(1) Introduce a reference sample of methanol (the concentration of methanol in deionized water is known and is C_{MR} in the calculations) into the gas chromatograph and measure the area of the response peak This reference sample peak area is A_{MR} in the calculations.

(2) Introduce test samples into the gas chromatograph and measure the area of the response peak. This peak area is A_{MS} in the calculations.

(d) For HCHO (methanol-fueled vehicles):

(1) Introduce a reference sample of formaldehyde (the concentration of formaldehyde as a dinitrophenylhydrazine derivative in acetonitrile is known (C_{FR})) into the high pressure liquid chromatograph (HPLC) and measure the area of the response peak. This reference sample peak area is A_{FR} in the calculations.

(2) Introduce test samples into the high pressure liquid chromatograph and measure the area of the responses peak. This peak area is A_{FS} in the calculations.

[54 FR 14533, Apr. 11, 1989]

§ 86.140–94 Exhaust sample analysis.

The following sequence shall be performed in conjunction with each series of measurements:

(a) For CO, CO_2, CH_4, NO_X, and for Otto-cycle and methanol-fueled, natural gas-fueled and liquefied petroleum gas-fueled (if non-heated FID option is used) diesel vehicle HC:

(1) Zero the analyzers and obtain a stable zero reading. Recheck after tests.

(2) Introduce span gases and set instrument gains. In order to avoid errors, span and calibrate at the same flow rates used to analyze the test sample. Span gases should have concentrations equal to 75 to 100 percent of full scale. If gain has shifted significantly on the analyzers, check the calibrations. Show actual concentrations on chart.

(3) Check zeroes; repeat the procedure in paragraphs (a) (1) and (2) of this section if required.

(4) Check flow rates and pressures.

(5) Measure THC, CO, CO_2, CH_4, and NO_X concentrations of samples.

(6) Check zero and span points. If difference is greater than 2 percent of full scale, repeat the procedure in paragraphs (a) (1) through (5) of this section.

(b) For petroleum-fueled, natural gas-fueled and liquefied petroleum gas-fueled (if HFID is used) diesel vehicle HC:

(1) Zero HFID analyzer and obtain a stable zero reading.

(2) Introduce span gas and set instrument gains. Span gas should have concentration equal to 75 to 100 percent of full scale.

(3) Check zero as in paragraph (b)(1) of this section.

(4) Introduction of zero and span gas into the analyzer can be accomplished by either of the following methods:

(i) Close heated valve in THC sample (see Figures B94–5 or B94–6) and allow gases to enter HFID. Extreme care should be taken not to introduce gases under high pressure.

(ii) Connect zero and span line directly to THC sample probe and introduce gases at a flow rate greater than 125 percent of the HFID flow rate with the CVS blower operating (see Figures B94–5 or B94–6). Excess flow must be allowed to exit probe inlet.

NOTE: In order to minimize errors, HFID flow rate and pressure during zero and span (and background bag reading) must be exactly the same as that used during testing.

(5) Continuously record (integrate electronically if desired) dilute THC emission levels during test. Background samples are collected in sample bags and analyzed as in paragraphs (b)(4) (i) or (ii) of this section.

(6) Check zero and span as in paragraphs (b) (1) through (4) of this section. If difference is greater than 2 percent of full scale, void test and check for THC ''hangup'' or electronic drift in analyzer.

(c) For CH_3OH (methanol-fueled vehicles), introduce test samples into the gas chromatograph and measure the concentration. This concentration is C_{MS} in the calculations.

(d) For HCHO (methanol-fueled vehicles), introduce formaldehyde test samples into the high pressure liquid chromatograph and measure the concentration of formaldehyde as a dinitrophenylhydrazine derivative in acetonitrile. This concentration is C_{FS} in the calculations.

(e) For CH_4 analysis:

(1) In the event that the procedure results in negative $NMHC_{wm}$ values (as may occur with high methane fractions), any negative $NMHC_{wm}$ value whose absolute value is less than 10 percent of the NMHC standard shall be rounded to zero. Negative $NMHC_{wm}$ values whose absolute value is more than 10 percent of the NMHC standard shall require sample remeasurement. If the 10 percent criterion cannot be met after remeasurement, the test will be void.

(2) Other sampling procedures may be used if shown to yield equivalent or superior results and if approved in advance by the Administrator.

[56 FR 25777, June 5, 1991, as amended at 59 FR 48510, Sept. 21, 1994; 60 FR 34347, June 30, 1995]

§ 86.142–90 Records required.

The following information shall be recorded with respect to each test:

(a) Test number.

(b) System or device tested (brief description).

(c) Date and time of day for each part of the test schedule.

(d) Test results.

(e) Driver and equipment operator IDs.

(f) Vehicle: ID number, manufacturer, model year, standards, engine family, evaporative emissions family, basic engine description (including displacement, number of cylinders, turbo-/supercharger used, and catalyst usage), fuel system (including number of carburetors, number of carburetor barrels, fuel injection type, and fuel

tank(s) capacity and location), engine code, gross vehicle weight rating, inertia weight class, actual curb weight at zero miles, actual road load at 50 mph (80 kph), transmission configuration, axle ratio, car line, system miles, idle rpm, and drive wheel tire pressure, as applicable.

(g) Dynamometer: Dynamometer ID, inertia weight setting, indicated power absorption setting, records to verify compliance with the vehicle speed versus time requirements of the test, and driving distance for each of the three phases of the test, calculated from the measured roll or shaft revolutions.

(h) Gas analyzers: Analyzer bench ID, analyzer ranges, recordings of analyzer output during zero, span, and sample readings.

(i) Recorder charts: Test number, date, vehicle ID, operator ID, and identification of the measurements recorded.

(j) Test cell barometric pressure, ambient temperature, and humidity.

NOTE: A central laboratory barometer may be used: *Provided*, that individual test cell barometric pressures are shown to be within ±0.1 percent of the barometric pressure at the central barometer location.

(k) Temperatures: Records to verify compliance with the ambient temperature requirements throughout the test procedure and recordings of vehicle fuel temperature(s) during the diurnal test and of the enclosure temperatures during the diurnal and hot soak tests.

(l) CFV-CVS: Total dilute exhaust volume (Vmix) for each phase of the exhaust test.

(m) PDP-CVS: Test measurements required to calculate the Vmix. Total dilute exhaust volume (Vmix) for each phase of the exhaust test.

(n) The humidity of the dilution air.

NOTE: If conditioning columns are not used (see §§86.122 and 86.144) this measurement can be deleted. If the conditioning columns are used and the dilution air is taken from the test cell, the ambient humidity can be used for this measurement.

(o) Additional records required for diesel vehicles: (1) Pressure and temperature of the dilute exhaust mixture (and background air if sampled) at the inlet to the gas meter used for particulate sampling.

(2) The temperature of the dilute exhaust mixture inside the dilution tunnel near the inlet of the particulate probe.

(3) The temperature of the gas flowing in the heated sample line before the heated filter, and also before the HFID, and the temperature of the control system of the heated hydrocarbon detector.

(4) Gas meter or flow measurement instrumentation readings at the start of each sample period and at the end of each sample period.

(5) The stabilized pre-test weight and post-test weight of each particulate sample and back-up filter.

(6) Continuous temperature and humidity recording of the ambient air in which the particulate filters were stabilized.

(p) Additional required records for methanol-fueled vehicles:

(1) Specification of the methanol-fuel or methanol-fuel mixtures used during the test.

(2) Volume of sample passed through the methanol sampling system and the volume of deionized water in each impinger.

(3) The concentration of the GC analyses of the test samples (methanol).

(4) Volume of sample passed through the formaldehyde sampling system and the volume of DNPH solution used.

(5) The concentration of the HPLC analysis of the test sample (formaldehyde).

(6) The temperatures of the sample lines before the HFID and the impinger, the temperature of the exhaust transfer duct (as applicable), and the temperature of the control system of the heated hydrocarbon detector.

(7) A continuous measurement of the dew point of the raw and diluted exhaust. This requirement may be omitted if the temperatures of all heated lines are kept above 220 °F, or if the manufacturer performs an engineering analysis demonstrating that the temperature of the heated systems remains above the maximum dew point of the gas stream throughout the course of the test.

(q) *Additional required records for natural gas-fueled vehicles.* Composition, including all carbon containing compounds; e.g. CO_2, of the natural gas-fuel

used during the test. C_1 and C_2 compounds shall be individually reported. C_3 and heavier hydrocarbons, and C_6 and heavier compounds may be reported as a group.

(r) *Additional required records for liquefied petroleum gas-fueled vehicles.* Composition of the liquefied petroleum gas-fuel used during the test. Each hydrocarbon compound present, through C_4 compounds, shall be individually reported. C_5 and heavier hydrocarbons may be reported as a group.

[54 FR 14533, Apr. 11, 1989, as amended at 58 FR 58422, Nov. 1, 1993; 59 FR 48510, Sept. 21, 1994; 60 FR 34348, June 30, 1995]

§ 86.143–90 Calculations; evaporative emissions.

(a) The calculation of the net hydrocarbon, methanol and hydrocarbon plus methanol (total hydrocarbon equivalent) mass change in the enclosure is used to determine the diurnal and hot soak mass emissions. The mass changes are calculated from initial and final hydrocarbon and methanol concentrations in ppm carbon, initial and final enclosure ambient temperatures, initial and final barometric pressures, and net enclosure volume using the following equations:

(1) For methanol:

$$M_{CH3OH} = V_n X \times \frac{T_{Ef}}{\left(V_{Ef} \times T_{SHEDf}\right)} \times \left[\left(C_{MS1f} \times AV_{1f}\right) + \left(C_{MS2f} \times AV_{2f}\right)\right] - \frac{T_{Ei}}{\left(V_{Ei} \times T_{SHEDi}\right)} \times \left[\left(C_{MS1i} \times AV_{1i}\right) + \left(C_{MS2i} \times AV_{2i}\right)\right]$$

Where:

(i) M_{CH3OH} = Methanol mass change, μg.

(ii) V_n = Net enclosure volume, ft^3, as determined by subtracting 50 ft^3 (1.42 m^3) (volume of vehicle with trunk and windows open) from the enclosure volume. A manufacturer may use the measured volume of the vehicle (instead of the nominal 50 ft^3) with advance approval by the Administrator: *Provided*, the measured volume is determined and used for all vehicles tested by that manufacturer.

(iii) T_E = Temperature of sample withdrawn, °R.

(iv) V_E = Volume of sample withdrawn, ft^3.

(v) T_{SHED} = Temperature of SHED, °R

(vi) C_{MS} = GC concentration of sample, μg/ml.

(vii) AV = Volume of absorbing reagent in impinger.

(viii) P_B = Barometric pressure at time of sampling, in. Hg.

(ix) i = Initial sample.

(x) f = Final sample.

(xi) 1 = First impinger.

(xii) 2 = Second impinger.

(2) For hydrocarbons:

$$M_{HC} = \left(kV_n \times 10^{-4}\right)\left[\frac{\left(C_{HCf} - rC_{CH3OHf}\right)P_{Bf}}{T_f} - \frac{\left(C_{HCi} - rC_{CH3OHi}\right)P_{Bi}}{T_i}\right]$$

Where:

(i) M_{HC}=Hydrocarbon mass change, g.

(ii) C_{HC}=FID hydrocarbon concentration as ppm carbon including FID response to methanol in the sample.

(iii) C_{CH3OH} = Methanol concentration as ppm carbon.

$$= \frac{1.501 \times 10^{-3} \times T}{P_B \times V_E} \times \left[\left(C_{S1} \times AV_1 \right) + \left(C_{S2} \times AV_2 \right) \right]$$

(iv) V_n=Net enclosure volume ft³ (m³), as determined by subtracting 50 ft³ (1.42 m³) (volume of vehicle with trunk and windows open) from the enclosure volume. A manufacturer may use the measured volume of the vehicle (instead of the nominal 50 ft³) with advance approval by the Administrator: *Provided*, the measured volume is determined and used for all vehicles tested by that manufacturer.

(v) r=FID response factor to methanol.

(vi) P_B=Barometric pressure, in Hg (kPa).

(vii) T=Enclosure temperature, °R(°K).

(viii) i=initial reading.

(ix) f=final reading.

(x) 1=First impinger.

(xi) 2=Second impinger.

(xii)(A) k=0.208 (12+H/C).

(B) *For SI units*, k=1.2 (12+H/C).

Where:

(xiii) H/C=hydrogen-carbon ratio.

(A) H/C=2.33 for diurnal emissions.

(B) H/C=2.2 for hot soak emissions.

(3) For total evaporative emissions:

Total Evaporative Emissions=Total Diurnal Emissions+Total Hot Soak Emissions

$$= \left(M_{HC} + \frac{14.3594}{32.042} \times 10^6 M_{CH3OH} \right) + \left(M_{HC} + \frac{14.2284}{32.042} \times 10^6 M_{CH3OH} \right), g$$

(b) The final reported results shall be computed by summing the individual evaporative emission results determined for the diurnal breathing-loss test, running-loss test and the hot-soak test.

[54 FR 14534, Apr. 11, 1989, as amended at 60 FR 34348, June 30, 1995]

§ 86.143–96 Calculations; evaporative emissions.

(a) The following equations are used to calculate the evaporative emissions from gasoline- and methanol-fueled vehicles, and for gaseous-fueled vehicles.

(b) Use the measurements of initial and final concentrations to determine the mass of hydrocarbons and methanol emitted. For testing with pure gasoline, methanol emissions are assumed to be zero.

(1) For enclosure testing of diurnal, hot soak, and running loss emissions:

(i) Methanol emissions:

$$M_{CH_3OH} = V_n \times \left[\frac{\left(C_{MS1f} \times AV_{1f} \right) + \left(C_{MS2f} \times AV_{2f} \right)}{V_{E_f}} \right] - \left[\frac{\left(C_{MS1i} \times AV_{1i} \right) + \left(C_{MS2i} \times AV_{2i} \right)}{V_{E_i}} \right] + \left(M_{CH_3OH,out} - M_{CH_3OH,in} \right)$$

Where:

(A) M_{CH3OH} = Methanol mass change, μg.

(B) V_n = Net enclosure volume, ft³, as determined by subtracting 50 ft³ (1.42 m³) (volume of vehicle with trunk and windows open) from the enclosure volume. A manufacturer may use the measured volume of the vehicle (instead of the nominal 50 ft³) with advance approval by the Administrator: *Provided*, the measured volume is determined and used for all vehicles tested by that manufacturer.

(C) [Reserved]

(D) V_E=Volume of sample withdrawn, ft³. Sample volumes must be corrected for differences in temperature to be consistent

with determination of V_n, prior to being used in the equation.
(E) [Reserved]
(F) C_{MS} = GC concentration of sample, μg/ml.
(G) AV = Volume of absorbing reagent in impinger.
(H) P_B = Barometric pressure at time of sampling, in. Hg.
(I) i = Initial sample.
(J) f = Final sample.
(K) 1 = First impinger.
(L) 2 = Second impinger.
(M) $M_{CH3OH, out}$=mass of methanol exiting the enclosure, in the case of fixed-volume enclosures for diurnal emission testing, μg.
(N) $M_{CH3OH, in}$=mass of methanol entering the enclosure, in the case of fixed-volume enclosures for diurnal emission testing, μg.

(ii) Hydrocarbon emissions:

$$M_{HC} = \left(kV_n \times 10^{-4}\right) \times \left(\frac{\left(C_{HC_f} - rC_{CH_3OH_f}\right)P_{B_f}}{T_f} - \frac{\left(C_{HC_i} - rC_{CH_3OH_i}\right)P_{B_i}}{T_i} \right) + M_{HC,out} - M_{HC,in}$$

Where,
(A) M_{HC}=Hydrocarbon mass change, g.
(B) C_{HC} = FID hydrocarbon concentration as ppm including FID response to methanol (or methane, as appropriate) in the sample.
(C) C_{CH3OH} = Methanol concentration as ppm carbon.

$$= \frac{1.501 \times 10^{-3} \times T}{P_B \times V_E} \times \left[\left(C_{S1} \times AV_1\right) + \left(C_{S2} \times AV_2\right)\right]$$

(D) V_n=Net enclosure volume ft³ (m³) as determined by subtracting 50 ft³ (1.42 m³) (volume of vehicle with trunk and windows open) from the enclosure volume. A manufacturer may use the measured volume of the vehicle (instead of the nominal 50 ft³) with advance approval by the Administrator, provided the measured volume is determined and used for all vehicles tested by that manufacturer.
(E) r=FID response factor to methanol.
(F) P_B=Barometric pressure, in Hg (Kpa).
(G) T=Enclosure temperature, °R(°K).
(H) i=initial reading.
(I) f=final reading.
(J) 1=First impinger.
(K) 2=Second impinger.
(L) Assuming a hydrogen to carbon ratio of 2.3:
(*1*) k=2.97; and
(*2*) For SI units, k=17.16.
(M) $M_{HC, out}$=mass of hydrocarbons exiting the enclosure, in the case of fixed-volume enclosures for diurnal emission testing, g.
(N) $M_{HC, in}$=mass of hydrocarbons entering the enclosure, in the case of fixed-volume enclosures for diurnal emission testing, g.

(iii) For variable-volume enclosures, defined in § 86.107(a)(1)(i), the following simplified form of the hydrocarbon mass change equation may be used:

$$M_{HC} = \left(\frac{kP_B V_n \times 10^{-4}}{T} \right) \times \left[\left(C_{HC_f} - rC_{CH_3OH_f}\right) - \left(C_{HC_i} - rC_{CH_3OH_i}\right)\right]$$

(2) For running loss testing by the point-source method, the mass emissions of each test phase are calculated below, then summed for a total mass emission for the running loss test. If emissions are continuously sampled, the following equations can be used in integral form.

(i) Methanol emissions:

$M_{CH_3OH} = \rho_{CH_3OH}\ V_{mix} \times (C_{CH_3OH, rl} - C_{CH_3OH, d})$

Where,

(A) M_{CH_3OH}=methanol mass change, μg.

(B) $\rho_{CH_3,OH}$= 37.71 g/ft³, density of pure vapor at 68 °F.

(C) V_{mix}=total dilute sample volume, in ft³, calculated as appropriate for the collection technique used.

(D) $C_{CH_3OH,\,rl}$=methanol concentration of diluted running loss sample, in ppm carbon equivalent.

(E) $C_{CH_3OH,\,d}$=methanol concentration of dilution air, in ppm carbon equivalent.

(ii) Hydrocarbon emissions:

$$M_{HC}=\rho_{HC}\ V_{mix}10^{-6}\times(C_{HC,\,rl}-C_{HC,\,d})$$

Where,

(A) M_{HC}=hydrocarbon mass change, g.

(B) ρ_{HC}= 16.88 g/ft³, density of pure vapor at 68 °F (for hydrogen to carbon ratio of 2.3).

(C) V_{mix}=total dilute sample volume, in ft³, calculated as appropriate for the collection technique used.

(D) $C_{HC,\,rl}$=hydrocarbon concentration of diluted running loss sample, in ppm carbon equivalent.

(E) $C_{HC,\,d}$=hydrocarbon concentration of dilution air, in ppm carbon equivalent.

(c) Calculate the adjusted total mass emissions for each test segment.

(1)
$$M_{DI}=\left(M_{HC}+\frac{14.3594}{32.042}\times10^{-6}M_{CH_3OH}\right)_{DI}$$

where M_{DI}=mass emissions from the diurnal emission test (see § 86.133), g.

(2)
$$M_{HS}=\left(M_{HC}+\frac{14.2284}{32.042}\times10^{-6}M_{CH_3OH}\right)_{HS}$$

where M_{HS}=mass emissions from the hot soak test (see § 86.138), g.

(3)
$$M_{RL}=\left(M_{HC}+\frac{14.2284}{32.042}\times10^{-6}M_{CH_3OH}\right)_{RL}$$

where M_{RL}=mass emissions from the running loss test (see § 86.134), g.

(d)(1) For the full three-diurnal test sequence, there are two final results to report:

(i) The sum of the adjusted total mass emissions for the diurnal and hot soak tests (M_{DI}+M_{HS}); and

(ii) The adjusted total mass emissions for the running loss test, on a grams per mile basis=M_{RL}/D_{RL}, where D_{RL}=miles driven for the running loss test (see § 86.134–96(c)(6)).

(2) For the supplemental two-diurnal test sequence, there is one final result to report: the sum of the adjusted total mass emissions for the diurnal and hot soak tests (M_{DI}+M_{HS}), described in §§ 86.133–96(p) and 86.138–96(k), respectively.

[58 FR 16043, Mar. 24, 1993, as amended at 59 FR 48510, Sept. 21, 1994; 60 FR 34348, June 30, 1995; 60 FR 43897, Aug. 23, 1995]

§ 86.144–90 Calculations; exhaust emissions.

The final reported test results shall be computed by use of the following formula:

(a) For light-duty vehicles and light duty trucks:

$$Y_{wm} = 0.43\left(\frac{Y_{ct} + Y_s}{D_{ct} + D_s}\right) + 0.57\left(\frac{Y_{ht} + Y_s}{D_{ht} + D_s}\right)$$

Where:

(1) Y_{wm}=Weighted mass emissions of each pollutant, *i.e.*, HC, CO, NO_X or CO_2, in grams per vehicle mile and if appropriate, the weighted total hydrocarbon equivalent mass in grams per vehicle mile.

(2) Y_{ct}=Mass emissions as calculated from the ''transient'' phase of the cold start test, in grams per test phase.

(3) Y_{ht}=Mass emissions as calculated from the ''transient'' phase of the hot start test, in grams per test phase.

(4) Y_s=Mass emissions as calculated from the ''stabilized'' phase of the cold start test, in grams per test phase.

(5) D_{ct}=The measured driving distance from the ''transient'' phase of the cold start test, in miles.

(6) D_{ht}=The measured distance from the ''transient'' phase of the hot start test, in miles.

(7) D_s=The measured driving distance from the ''stabilized'' phase of the cold start test, in miles.

(b) The mass of each pollutant for each phase of both the cold start test and the hot start test is determined from the following:

(1) Hydrocarbon mass:

$HC_{mass}=V_{mix}\times Density_{HC}\times(HC_{conc}/1{,}000{,}000)$

(2) Oxides of nitrogen mass:

$NO_{xmass}=V_{mix}\times Density_{NO2}\times_H\times(NO_{xconc}/1{,}000{,}000)$

(3) Carbon monoxide mass:

$CO_{mass}=V_{mix}\times Density_{CO}\times(CO_{conc}/1{,}000{,}000)$

(4) Carbon dioxide mass:

$CO_{2mass}=V_{mix}\times Density_{CO2}\times(CO_{2conc}/100)$

(5) Methanol mass:

$CH_3OH_{mass}=V_{mix}\times Density_{CH3OH}\times(CH_3OH_{conc}/1{,}000{,}000)$

(6) Formaldehyde mass:

$HCHO_{mass}=V_{mix}\times Density_{HCHO}\times(HCHO_{conc}/1{,}000{,}000)$

(7) Total hydrocarbon equivalent mass:

(i) THCE=

$$HC_{Mass} + \frac{13.8756}{32.042}\left(CH_3OH_{mass}\right) + \frac{13.8756}{30.0262}\left(HCHO_{mass}\right)$$

(c) Meaning of symbols:

(1)(i) HC_{mass}=Hydrocarbon emissions, in grams per test phase.

(ii) $Density_{HC}$=Density of hydrocarbons is 16.33 g/ft^3 (0.5768 kg/m^3), assuming an average carbon to hydrogen ratio of 1:1.85, at 68 °F (20 °C) and 760 mm Hg (101.3 kPa) pressure.

(iii)(A) HC_{conc}=Hydrocarbon concentration of the dilute exhaust sample corrected for background, in ppm carbon equivalent, *i.e.*, equivalent propane ×3.

(B) $HC_{conc}=HC_e-HC_d(1-1/DF)$.

Where:

(iv)(A) HC_e=Hydrocarbon concentration of the dilute exhaust sample or, for diesel (or methanol-fueled vehicles, if selected), average hydrocarbon concentration of the dilute exhaust sample as calculated from the integrated HC traces, in ppm carbon equivalent.

(B) HC_e=FID $HC_e-(r)C_{CH3OHe}$

(v) FID HC_e=Concentration of hydrocarbon plus methanol in dilute exhaust as measured by the FID, ppm carbon equivalent.

(vi) r=FID response to methanol.

(vii) C_{CH3OHe}=Concentration of methanol in dilute exhaust as determined from the dilute exhaust methanol sample in ppm carbon. For vehicles not fueled with methanol, C_{CH3OHe} equals zero.

(viii)(A) HC_d=Hydrocarbon concentration of the dilution air as measured, in ppm carbon equivalent.

(B) HC_d=FID $HC_d-(r)C_{CH3OHd}$

(ix) FID HC_d=Concentration of hydrocarbon plus methanol in dilution air as

measured by the FID, ppm carbon equivalent.

(x) C_{CH3OHd}=Concentration of methanol in dilution air as determined from dilution air methanol sample in ppm carbon. For vehicles not fueled with methanol, C_{CH3OHd} equal zero.

(2)(i) NO_{Xmass}=Oxides of nitrogen emissions, in grams per test phase.

(ii) $Density_{NO2}$=Density of oxides of nitrogen is 54.16 g/ft^3 (1.913 kg/m^3) assuming they are in the form of nitrogen dioxide, at 68 °F (20 °C) and 760 mm Hg (101.3kPa) pressure.

(iii)(A) NOx_{conc}=Oxides of nitrogen concentration of the dilute exhaust sample corrected for background, in ppm.

(B) $NOx_{conc}=NOx_e-NOx_d(1-(1/DF))$.

Where:

(iv) NOx_e=Oxides of nitrogen concentration of the dilute exhaust sample as measured, in ppm.

(v) NOx_d=Oxides of nitrogen concentration of the dilution air as measured, in ppm.

(3)(i) CO_{mass}=Carbon monoxide emissions, in grams per test phase.

(ii) $Density_{co}$=Density of carbon monoxide is 32.97 g/ft^3 (1.164 kg/m^3), at 68 °F (20 °C) and 760 mm Hg (101.3 kPa) pressure.

(iii)(A) CO_{conc}=Carbon monoxide concentration of the dilute exhaust sample corrected for background, water vapor, and CO_2 extraction, in ppm.

(B) $CO_{conc}=CO_e-CO_d(1-(1/DF))$.

Where:

(iv)(A) CO_e=Carbon monoxide concentration of the dilute exhaust volume corrected for water vapor and carbon dioxide extraction, in ppm.

(B) $CO_e=(1-0.01925CO_{2e}-0.000323R)CO_{em}$ for petroleum fuel with hydrogen to carbon ratio of 1.85:1.

(C) $CO_e=[1-(0.01+0.005HCR)CO_{2e}-0.000323R]CO_{em}$ for methanol fuel, where HCR is hydrogen-to-carbon ratio as measured for the fuel used.

(v) CO_{em}=Carbon monoxide concentration of the dilute exhaust sample as measured, in ppm.

(vi) CO_{2e}=Carbon dioxide concentration of the dilute exhaust sample, in percent.

(vii) R=Relative humidity of the dilution air, in percent (see § 86.142(n)).

(viii)(A) CO_d=Carbon monoxide concentration of the dilution air corrected for water vapor extraction, in ppm.

(B) $CO_d=(1-0.000323R)CO_{dm}$.

Where:

(ix) CO_{dm}=Carbon monoxide concentration of the dilution air sample as measured, in ppm.

NOTE: If a CO instrument which meets the criteria specified in § 86.111 is used and the conditioninq column has been deleted, CO_{em} must be substituted directly for CO_e and CO_{dm} must be substituted directly for CO_d.

(4)(i) CO_{2mass}=Carbon dioxide emissions, in grams per test phase.

(ii) Density CO_2=Density of carbon dioxide is 51.81 g/ft^3 (1.830 kg/m^3), at 68 °F (20 °C) and 760 mm Hg (101.3 kPa) pressure.

(iii)(A) CO_{2conc}=Carbon dioxide concentration of the dilute exhaust sample corrected for background, in percent.

(B) $CO_{2conc}=C0_{2e}-CO_{2d}(1-(1/DF))$.

Where:

(iv) CO_{2d}=Carbon dioxide concentration of the dilution air as measured, in percent.

(5)(i) CH_3OH_{mass}=Methanol emissions corrected for background, in grams per test phase.

(ii) $Density_{CH3OH}$=Density of methanol is 37.71 g/ft^3 (1.332 kg/m^3), at 68 °F (20 °C) and 760 mmHg (101.3kPa) pressure.

(iii)(A) CH_3OH_{conc}=Methanol concentration of the dilute exhaust corrected for background, ppm.

(B) $CH_3OH_{conc}=C=_{CH3OHe}-C_{CH3OHd}(1-(1/DF))$

Where:

(iv)(A) C_{CH3OHe}=Methanol concentration in the dilute exhaust, ppm.

(B)

$$C_{CH3OHe}=\frac{3.813\times10^{-2}\times C_{CH3OHR}\times T_{EM}\left[\left(A_{S1}\times AV_{S1}\right)+\left(A_{S2}\times AV_{S2}\right)\right]}{A_{CH3OHR}\times P_B\times V_{EM}}$$

(v)(A) C_{CH3OHd}=Methanol concentration in the dilution air, ppm.

(B)

$$C_{CH3OHd} = \frac{3.813 \times 10^{-2} \times C_{CH3OHR} \times T_{DM}\left[\left(A_{D1} \times AV_{D1}\right) + \left(A_{D2} \times AV_{D2}\right)\right]}{A_{CH3OHR} \times P_B \times V_{DM}}$$

(vi) C_{CH3OHR}=Concentration of methanol in standard sample for calibration of GC, μg/ml.

(vii) A_{CH3OHR}=GC peak area of standard sample.

(viii) T_{EM}=Temperature of methanol sample withdrawn from dilute exhaust, °R.

(ix) T_{DM}=Temperature of methanol sample withdrawn from dilution air, °R.

(x) P_B=Barometric pressure during test, mm Hg.

(xi) V_{EM}=Volume of methanol sample withdrawn from dilute exhaust, ft^3.

(xii) V_{DM}=Volume of methanol sample withdrawn from dilution air, ft^3.

(xiii) A_S=GC peak area of sample drawn from dilute exhaust.

(xiv) A_D=GC peak area of sample drawn from dilution air.

(xv) AV_S=Volume of absorbing reagent (deionized water) in impinger through which methanol sample from dilute exhaust is drawn, ml.

(xvi) AV_D = Volume of absorbing reagent (deionized water) in impinger through which methanol sample from dilution air is drawn, ml.

(6)(i) $HCHO_{mass}$ = Formaldehyde emissions corrected for background, in grams per test phase.

(ii) $Density_{HCHO}$ = Density of formaldehyde is 35.36 g/ft^3 (1.249 kg/m^3), at 68 °F (20 °C) and 760 mmHg (101.3 kPa) pressure.

(iii)(A) $HCHO_{conc}$ = Formaldehyde concentration of the dilute exhaust corrected for background, in ppm.

(B) $HCHO_{conc} = C_{HCHOe} - C_{HCHOd}\ (1 - (1/DF))$

Where:

(iv)(A) C_{HCHOe} = Formaldehyde concentration in dilute exhaust, in ppm.

(B)

$$C_{HCHOe} = \frac{4.069 \times 10^{-2} \times C_{FDE} \times V_{AE} \times Q \times T_{EF}}{V_{SE} \times P_B}$$

(v)(A) C_{HCHOd} = Formaldehyde concentration in dilution air in ppm.

(B)

$$C_{HCHOd} = \frac{4.069 \times 10^{-2} \times C_{FDA} \times V_{AA} \times Q \times T_{DF}}{V_{SA} \times P_B}$$

(vi) C_{FDE} = Concentration of DNPH derivative of formaldehyde from dilute exhaust sample in sampling solution, μg/ml.

(vii) V_{AE} = Volume of sampling solution for dilute exhaust formaldehyde sample, ml.

(viii)(A) Q = Ratio of molecular weights of formaldehyde to its DNPH derivative.

(B) Q = 0.1429.

(ix) T_{EF} = Temperature of formaldehyde sample withdrawn from dilute exhaust, °R.

(x) V_{SE} = Volume of formaldehyde sample withdrawn from dilute exhaust, ft^3.

(xi) P_B = Barometric pressure during test, mm Hg.

(xii) C_{FDA} = Concentration of DNPH derivative of formaldehyde from dilution air sample in sampling solution, µg/ml.

(xiii) V_{AA} = Volume of sampling solution for dilution air formaldehyde sample, ml.

(xiv) T_{DF} = Temperature of formaldehyde sample withdrawn from dilution air, °R.

(xv) V_{SA} = Volume of formaldehyde sample withdrawn from dilution air, ft^3.

(7)(i) DF = 13.4/[CO_{2e} + (HC_e + CO_e) 10^{-4}] for petroleum-fueled vehicles.

(ii)

$$DF = \frac{100\left(\frac{X}{x + y/2 + 3.76(x + y/4 - z/2)}\right)}{CO_{2e} + \left(HC_e + CO_e + C_{CH_3OHe} + C_{HCHOe}\right)10^{-4}}$$

for methanol-fueled vehicles where fuel composition is C_x H_y O_z as measured for the fuel used.

(iii)(A) K_H = Humidity correction factor.

(B) $K_H = 1/[1 - 0.0047(H - 75)]$.

(C) *For SI units*, $K_H = 1/[1 - 0.0329(H - 10.71)]$.

Where:

(iv)(A) H = Absolute humidity in grains (grams) of water per pound (kilogram) of dry air.

(B) $H = [(43.478)R_a \times P_d]/[P_B - (P_d \times R_a/100)]$.

(C) *For SI units*, $H = [(6.211)R_a \times P_d]/[P_B - (P_d \times R_a/100)]$.

(v) R_a = Relative humidity of the ambient air, percent.

(vi) P_d = Saturated vapor pressure, mm Hg (kPa) at the ambient dry bulb temperature.

(vii) P_B = Barometric pressure, mm Hg (kPa),

(viii)(A) V_{mix} = Total dilute exhaust volume in cubic feet per test phase corrected to standard conditions (528 °R (293 °K) and 760 mm Hg (101.3 kPa)).

(B) For PDP-CVS,V_{mix} is:

$$V_{mix} = \frac{V_o \times N \times (P_B - P_4) \times 528}{760 \times T_P}$$

(C) *For SI units*,

$$V_{mix} = \frac{V_o \times N \times (P_B - P_4) \times 293}{101.3 \times T_P}$$

Where:

(ix) V_o = Volume of gas pumped by the positive displacement pump, in cubic feet (m^3) per revolution. This volume is dependent on the pressure differential across the positive displacement pump.

(x) N = Number of revolutions of the positive displacement pump during the test phase while samples are being collected.

(xi) P_B = Barometric pressure, mm Hg (kPa).

(xii) P_4 = Pressure depression below atmospheric measured at the inlet to the positive displacement pump, in mm Hg (kPa) (during an idle mode).

(xiii) T_p = Average temperature of dilute exhaust entering positive displacement pump during test, °R(°K).

(d) For petroleum-fueled vehicles, example calculation of mass values of exhaust emissions using positive displacement pump:

(1) For the ''transient'' phase of the cold start test assume the following:

V_o = 0.29344 ft³/rev; N = 10,485; R = 48.0 pct; R_a = 48.2 percent; P_B = 762 mm Hg; P_d = 22.225 mm Hg; P_4 = 70 mm Hg; T_p = 570 °R; HC_e = 105.8 ppm, carbon equivalent; NO_{xe} = 11.2 ppm; CO_{em} = 306.6 ppm; CO_{2e} = 1.43 percent; HC_d = 12.1 ppm; NO_{xd} = 0.8 ppm; CO_{dm} = 15.3 ppm; CO_{2d} = 0.032 percent; D_{ct} = 3.598 miles.

Then:

(i) V_{mix} = (0.29344)(10,485)(762 − 70)(528)/(760)(570) = 2595.0 ft³ per test phase.

(ii) H=(43.478)(48.2)(22.225)/762 − (22.225)(48.2/100) = 62 grains of water per pound of dry air.

(iii) K_H = 1/[1 − 0.0047(62 − 75)] = 0.9424

(iv) CO_e = [1 − 0.01925(1.43) − 0.000323(48)](306.6) = 293.4 ppm.

(v) CO_d = [1 − 0.000323(48)](15.3) = 15.1 ppm.

(vi) DF = 13.4/[1.43 = 10^{-4}(105.8 + 293.4)] = 9.116.

(vii) HC_{conc} = 105.8 − 12.1(1 − 1/9.116) = 95.03 ppm.

(viii) HC_{mass} = (2595)(16.33)(95.03/1,000,000) = 4.027 grams per test phase.

(ix) NOx_{conc} = 11.2 − 0.8(1 − 1/9.116) = 10.49 ppm.

(x) NOx_{mass} = (2595)(54.16)(10.49/1,000,000)(0.9424) = 1.389 grams per test phase.

(xi) CO_{conc} = 293.4 − 15.1(1 − 1/9.116) = 280.0 ppm.

(xii) CO_{mass} = (2595)(32.97)(280/1,000,000) = 23.96 grams per test phase.

(xiii) CO_{2conc} = 1.43 − 0.032(1 − 1/9.116) = 1.402 percent.

(xiv) CO_{2mass} = (2595.0)(51.85)(1.402/100) = 1886 grams per test phase.

(2) For the stabilized portion of the cold start test assume that similar calculations resulted in the following:

(i) HC_{mass} = 0.62 grams per test phase.

(ii) NOx_{mass} = 1.27 grams per test phase.

(iii) CO_{mass} = 5.98 grams per test phase.

(iv) CO_{2mass} = 2346 grams per test phase.

(v) D_s = 3.902 miles.

(3) For the ''transient'' portion of the hot start test assume that similar calculations resulted in the following:

(i) HC_{mass} = 0.51 gram per test phase.

(ii) NOx_{mass} = 1.38 grams per test phase.

(iii) CO_{mass} = 5.01 grams per test phase.

(iv) CO_{2mass} = 1758 grams per test phase.

(v) D_{ht} = 3.598 miles.

(4) Weighted mass emission results:

(i) HC_{wm} = 0.43[(4.027 + 0.62)/(3.598 + 3.902)] + 0.57[(0.51 + 0.62)/(3.598 + 3.902)] = 0.352 grams per vehicle mile.

(ii) NO_{xwm} = 0.43[(1.389 + 1.27)/(3.598 + 3.902)] + 0.57[(1.38 + 1.27)/(3.598 + 3.902)] = 0.354 grams per vehicle mile.

(iii) CO_{wm} = 0.43[(23.96 + 5.98)/(3.598 + 3.902)] = 0.57[(5.01 + 5.98)/(3.598 + 3.902)] = 2.55 grams per vehicle mile.

(iv) CO_{2wm} = 0.43[(1886 + 2346)/(3.598 + 3.902) = 0.57[(1758 + 2346)/(3.598 + 3.902)] = 555 grams per vehicle mile.

(e) For methanol-fueled vehicle with measured fuel composition of $CH_{3.14}O_{0.6}$ example calculation of exhaust emissions using positive displacement pump:

(1) For the ''transient'' phase of the cold start test assume the following:

V_o = 0.29344 ft³/rev; N = 10,485; R = 48.0 pct; R_a = 48.2 percent; P_B = 762 mm Hg; P_d = 22.225 mm Hg; P_4 = 70 mm Hg; T_p 570 °R; FID HC_e = 81.6 ppm, carbon equivalent; r = 0.75; C_{CH3OHR} = 71 ug/ml; T_{EM} = 567 °R; A_{CH3OHR} = 3660; V_{EM} 1.18 ft³; A_{S1} = 4460; AV_{s1} = 25.2 ml; A_{s2} = 360; AV_{s2} = 24.9 ml; T_{DM} = 532 °R; V_{DM} = 1.17 ft³; A_{D1} = 110; AV_{D1} = 25.0 ml; A_{D2} = 10; AV_{D2} = 25.1 ml; C_{FDE} = 20 ug/ml; V_{AE} = 5.0 ml; Q = 0.1429; T_{EF} = 569 °R; V_{SE} = 0.30 ft³; C_{FDA} = 1 ug/ml; V_{AA} = 5.0 ml; T_{DF} = 532 °R; V_{SA} = 0.31 ft³; NOx_e = 11.2 ppm; CO_{em} = 306.6 ppm; CO_{2e} = 1.43 pct; FID HC_d = 12.1 ppm; NOx_d = 0.8 ppm; CO_{dm} = 15.3 ppm; CO_{2d} = 0.032 percent; D_{ct} = 3.598 miles.

Then:

(i) V_{mix} = (0.29344)(10,485)(762 − 70)(528)/(760)(570) = 2595.0 ft³ per test phase.

(ii) H = (43.478)(48.2)(22.225)/[762 − (22.225 × 48.2/100)] = 62 grains of water per pound of dry air.

(iii) K_H = 1/[1 − 0.0047(62 − 75)] = 0.9424.

(iv) CO_e = [1 − (0.01 + 0.005 × 3.14 × 1.43) − 0.000323(48))] × 306.6 = 291.9 ppm.

(v) CO_d = (1 − 0.000323(48)) × 15.3 = 15.1 ppm.

(vi) C_{CH3OHe} = $(3.813\times10^{-2})(71)(567)[(4460)(25.2) + (360)(24.9)] / (3660)(762)(1.18) = 56.60$ ppm.

(vii) DF = 100(1/[1 + (3.14/2) + 3.76(1 + (3.14/4) − (0.6/2))])/1.43 + 10^{-4}[(81.6 + 291.9 + (1 − 0.75)(56.60)] + 8.350

(viii) C_{CH3OHd} = $(3.813\times10^{-2})(71)(532)[(110)(25.0) + (10)(25.1)] / (3660)(762)(1.17) = 1.32$ ppm.

(ix) $CH_3OH_{conc}=56.60-1.32(1-1/8.350)=55.44$ ppm.

(x) $CH_3OH_{mass}=2595.0\times37.71\times(55.44/1{,}000{,}000)=5.43$ grams per test phase.

(xi) HC_{conc} = $[81.6-(0.75)(56.60)]-[12.1-(0.75)(1.32)](1-1/8.530) = 29.34$ ppm.

(xii) $HC_{mass}=(2594)\ (16.33)\ (29.34/1{,}000{,}000)=1.24$ grams per test phase.

(xiii) C_{HCHOe} = $4.069 \times 10^{-2}(20)(5)(0.1429)(569)/(0.30)(762) = 1.4473$ ppm.

(xiv) C_{HCHOd} = $4.069 \times 10^{-2}(1)(5)(0.1429)(532)/(0.31)(762) = 0.0655$ ppm.

(xv) $HCHO_{conc}=1.4473-0.0655(1-1/8.350)=1.3896$ ppm.

(xvi) $HCHO_{mass}=(2595)(35.36)(1.3896/1{,}000{,}000)=0.1275$ grams per test phase.

(xvii) THCE = 1.24+(13.8756/32.042)(5.43) + (13.8756/30.0262)(0.1275) = 3.65 grams per test phase.

(xviii) $NOx_{conc}=11.2-(0.8)(1-1/8.350)=10.50$ ppm

(xix) $NOx_{mass}=(2595)(54.16)(10.50/1{,}000{,}000)(0.9424)=1.390$ grams per test phase.

(xx) $CO_{conc}=291.9-15.1\ (1-1/8.350)=278.61$ ppm.

(xxi) $CO_{mass}=(2595.0)(32.97)(278.69/1{,}000{,}000)=23.84$ grams per test phase.

(xxii) $CO_{2conc}=1.43-0.032\ (1-1/8.350)=1.402$ percent.

(xxiii) $CO_{2mass}=(2595.0)(51.85)(1.402/100)=1886$ grams per test phase.

(2) For the stabilized portion of the cold start test assume that similar calculations resulted in the following:

(i) THCE=0.55 grams per test phase.

(ii) NOx_{mass}=1.27 grams per test phase.

(iii) CO_{mass}=5.98 grams per test phase.

(iv) CO_{2mass}=2346 grams per test phase.

(v) D_s=3.902 miles.

(3) For the ''transient'' portion of the hot start test assume that similar calculations resulted in the following:

(i) THCE=0.67 grams as carbon equivalent per test phase.

(ii) NOx_{mass}=1.38 grams per test phase.

(iii) CO_{mass}=5.01 grams per test phase.

(iv) CO_{2mass}=1758 grams per test phase.

(v) D_{ht}=3.598 miles.

(4) Weighted emission results:

(i) $THCE_{wm}=0.43[(3.65+0.55)/(3.598+3.902)]+0.57[(0.67+0.55)/(3.598+3.902)]=0.334$ grams as carbon equivalent per mile.

(ii) $NOx_{wm}=0.43[(1.390+1.27)/(3.598+3.902)]+0.57[1.38+1.27)/(3.598+3.902)]=0.354$ grams per vehicle mile.

(iii) $CO_{wm}=0.43[(23.84+5.98)/(3.598+3.902)]+0.57[(5.01+5.98)/(3.598+3.902)]=2.54$ grams per vehicle mile.

(iv) $CO_{2wm}+0.43[(1886+2346)/(3.598+3.902)]+0.57[(1758+2346)/(3.598+3.902)]=555$ grams per vehicle mile.

[54 FR 14535, Apr. 11, 1989, as amended at 59 FR 39649, Aug. 3, 1994]

§ 86.144–94 Calculations; exhaust emissions.

The final reported test results shall be computed by use of the following formula:

(a) For light-duty vehicles and light duty trucks:

$$Y_{wm} = 0.43\left(\frac{(Y_{ct}+Y_s)}{(D_{ct}+D_s)}\right)+0.57\left(\frac{(Y_{ht}+Y_s)}{(D_{ht}+D_s)}\right)$$

Where:

(1) Y_{WM} = Weighted mass emissions of each pollutant, *i.e.*, THC, CO, THCE,

NMHC, NMHCE, CH_4, NO_X, or CO_2, in grams per vehicle mile.

(2) Y_{ct}=Mass emissions as calculated from the ''transient'' phase of the cold start test, in grams per test phase.

(3) Y_{ht}=Mass emissions as calculated from the ''transient'' phase of the hot start test, in grams per test phase.

(4) Y_s=Mass emissions as calculated from the ''stabilized'' phase of the cold start test, in grams per test phase.

(5) D_{ct}=The measured driving distance from the ''transient'' phase of the cold start test, in miles.

(6) D_{ht}=The measured distance from the ''transient'' phase of the hot start test, in miles.

(7) D_s=The measured driving distance from the ''stabilized'' phase of the cold start test, in miles.

(b) The mass of each pollutant for each phase of both the cold start test and the hot start test is determined from the following:

(1) Total hydrocarbon mass:

$$HC_{mass}=V_{mix} \times Density_{HC} \times (HC_{conc}/1{,}000{,}000)$$

(2) Oxides of nitrogen mass:

$$NOx_{mass}=V_{mix} \times Density_{NO2} \times K_H \times (NOx_{conc}/1{,}000{,}000)$$

(3) Carbon monoxide mass:

$$CO_{mass}=V_{mix} \times Density_{CO} \times (CO_{conc}/1{,}000{,}000)$$

(4) Carbon dioxide mass:

$$CO_{2mass}=V_{mix} \times Density_{CO2} \times (CO_{2conc}/100)$$

(5) Methanol mass:

$$CH_3OH_{mass}=V_{mix} \times Density_{CH}3OH \times (CH_3OH_{conc}/1{,}000{,}000)$$

(6) Formaldehyde mass:

$$HCHO_{mass}=V_{mix} \times Density_{HCHO} \times (HCHO_{conc}/1{,}000{,}000)$$

(7) Total hydrocarbon equivalent mass:

$$THCE_{mass} = HC_{mass} + 13.8756/32.042 \times (CH_3OH_{mass}) + 13.8756/32.0262 \times (HCHO_{mass})$$

(8) Non-methane hydrocarbon mass:

$$NMHC_{mass} = V_{mix} \times Density_{NMHC} \times (NMHC_{conc}/1{,}000{,}000)$$

(9) Non-methane hydrocarbon equivalent mass:

$$NMHCE_{mass} = NMHC_{mass} + 13.8756/32.042 \times (CH_3OH_{mass}) + 13.8756/30.0262 \times (HCHO_{mass})$$

(10) Methane mass:

$$CH_{4mass}=V_{mix}=Density_{CH4}=(CH_{4conc}/1{,}000{,}00)$$

(c) Meaning of symbols:

(1)(i) HC_{mass}=Total hydrocarbon emissions, in grams per test phase.

(ii) $Density_{HC}$=Density of total hydrocarbon.

(A) *For gasoline-fuel, diesel-fuel and methanol fuel;* $Density_{HC}$=16.33 g/ft^3 – carbon atom (0.5768 kg/m^3 – carbon atom), assuming an average carbon to hydrogen ratio of 1:1.85, at 68 °F (20 °C) and 760 mm Hg (101.3 kPa) pressure.

(B) *For natural gas and liquefied petroleum gas-fuel;* $Density_{HC}$=1.1771 (12.011+H/C (1.008)) g/ft^3 – carbon atom (0.04157(12.011+H/C (1.008))kg/m^3 – carbon atom), where H/C is the hydrogen to carbon ratio of the hydrocarbon components of the test fuel, at 68 °F (20 °C) and 760 mm Hg (101.3 kPa) pressure.

(iii)(A) HC_{conc}=Total hydrocarbon concentration of the dilute exhaust sample corrected for background, in ppm carbon equivalent, i.e., equivalent propane × 3.

(B) $HC_{conc}=HC_e - HC_d(1-1/DF)$.

Where:

(iv)(A) HC_e=Total hydrocarbon concentration of the dilute exhaust sample or, for diesel-cycle (or methanol-fueled vehicles, if selected), average hydrocarbon concentration of the dilute exhaust sample as calculated from the integrated THC traces, in ppm carbon equivalent.

(B) HC_e=FID $HC_e - (r)C_{CH}{}^3OHe$.

(v) FID HC_e=Concentration of total hydrocarbon plus methanol in dilute exhaust as measured by the FID, ppm carbon equivalent.

(vi) r=FID response to methanol.

(vii) $C_{CH}{}^3OHe$=Concentration of methanol in dilute exhaust as determined from the dilute exhaust methanol sample in ppm carbon. For vehicles not fueled with methanol, $C_{CH}{}^3OHe$ equals zero.

(viii)(A) HC_d=Total hydrocarbon concentration of the dilution air as measured, in ppm carbon equivalent.

(B) HC_d=FID $HC_d - (r)C_{CH}{}^3OHd$.

(ix) FID HC_d=Concentration of total hydrocarbon plus methanol in dilution

air as measured by the FID, ppm carbon equivalent.

(x) C_{CH^3OHd}=Concentration of methanol in dilution air as determined from dilution air methanol sample in ppm carbon. For vehicles not fueled with methanol, C_{CH^3OHd} equals zero.

(2)(i) NOx_{mass}=Oxides of nitrogen emissions, in grams per test phase.

(ii) $Density_{NO2}$=Density of oxides of nitrogen is 54.16 g/ft3 (1.913 kg/m^3) assuming they are in the form of nitrogen dioxide, at 68 °F (20 °C) and 760 mm Hg (101.3kPa) pressure.

(iii)(A) NOx_{conc}=Oxides of nitrogen concentration of the dilute exhaust sample corrected for background, in ppm.

(B) $NOx_{conc}=NOx_e-NOx_d(1-(1/DF))$.

Where:

(iv) NOx_e=Oxides of nitrogen concentration of the dilute exhaust sample as measured, in ppm.

(v) NOx_d=Oxides of nitrogen concentration of the dilution air as measured, in ppm.

(3)(i) CO_{mass}=Carbon monoxide emissions, in grams per test phase.

(ii) $Density_{CO}$ = Density of carbon monoxide is 32.97 g/ft^3 (1.164 kg/m3), at 68 °F (20 °C) and 760 mm Hg (101.3 kPa) pressure.

(iii)(A) CO_{conc} = Carbon monoxide concentration of the dilute exhaust sample corrected for background, water vapor, and CO_2 extraction, in ppm.

(B) $CO_{conc} = CO_e - CO_d(1 - (1/DF))$.

Where:

(iv)(A) CO_e = Carbon monoxide concentration of the dilute exhaust volume corrected for water vapor and carbon dioxide extraction, in ppm.

(B) $CO_e = (1 - 0.01925CO_{2e} - 0.000323R)CO_{em}$ for petroleum fuel with hydrogen to carbon ratio of 1.85:1.

(C) $CO_e=[1-(0.01+0.005HCR)CO_{2e}-0.000323R]CO_{em}$ for methanol-fuel or natural gas-fuel or liquefied petroleum gas-fuel, where HCR is hydrogen-to-carbon ratio as measured for the fuel used.

(v) CO_{em} = Carbon monoxide concentration of the dilute exhaust sample as measured, in ppm.

(vi) CO_{2e} = Carbon dioxide concentration of the dilute exhaust sample, in percent.

(vii) R = Relative humidity of the dilution air, in percent (see § 86.142(n)).

(viii)(A) CO_d = Carbon monoxide concentration of the dilution air corrected for water vapor extraction, in ppm.

(B) $CO_d = (1–0.000323R)CO_{dm}$.

Where:

(ix) CO_{dm} = Carbon monoxide concentration of the dilution air sample as measured, in ppm.

NOTE: If a CO instrument which meets the criteria specified in § 86.111 is used and the conditioning column has been deleted, CO_{em} must be substituted directly for CO_e and CO_{dm} must be substituted directly for CO_d.

(4)(i) CO_{2mass} = Carbon dioxide emissions, in grams per test phase.

(ii) Density CO_2 = Density of carbon dioxide is 51.81 g/ft^3 (1.830 kg/m^3), at 68 °F (20 °C) and 760 mm Hg (101.3 kPa) pressure.

(iii)(A) CO_{2conc} = Carbon dioxide concentration of the dilute exhaust sample corrected for background, in percent.

(B) $CO_{2conc} = CO_{2e} - CO_{2d}(1 - (1/DF))$.

Where:

(iv) CO_{2d} = Carbon dioxide concentration of the dilution air as measured, in percent.

(5)(i) CH_3OH_{mass} = Methanol emissions corrected for background, in grams per test phase.

(ii) $Density_{CH3OH}$=Density of methanol is 37.71 g/ft^3-carbon atom (1.332 kg/m^3-carbon atom), at 68 °F (20 °C) and 760 mm Hg (101.3 kPa) pressure.

(iii)(A) CH_3OH_{conc} = Methanol concentration of the dilute exhaust corrected for background, ppm.

(B) $CH_3OH_{conc} = C_{CH3OHe} - C_{CH3OHd}(1 - (1/DF))$.

Where:

(iv)(A) C_{CH3OHe}=Methanol concentration in the dilute exhaust, ppm.

(B)

$$C_{CH3OHe} = \frac{3.813\times10^{-2}\times T_{EM}\left[\left(C_{S1}\times AV_{S1}\right)+\left(C_{S2}\times AV_{S2}\right)\right]}{P_B\times V_{EM}}$$

(v)(A) C_{CH3OHd}=Methanol concentration in the dilution air, ppm.

(B)

$$C_{CH3OHd} = \frac{3.813 \times 10^{-2} \times T_{DM}\left[\left(C_{D1} \times AV_{D1}\right) + \left(C_{D2} \times AV_{D2}\right)\right]}{P_B \times V_{DM}}$$

(vi) T_{EM}=Temperature of methanol sample withdrawn from dilute exhaust, °R.

(vii) T_{DM}=Temperature of methanol sample withdrawn from dilution air, °R.

(viii) P_B=Barometric pressure during test, mm Hg.

(ix) V_{EM}=Volume of methanol sample withdrawn from dilute exhaust, ft^3.

(x) V_{DM}=Volume of methanol sample withdrawn from dilution air, ft^3.

(xi) C_S=GC concentration of sample drawn from dilute exhaust, µg/ml.

(xii) C_D=GC concentration of sample drawn from dilution air, µg/ml.

(xiii) AVS=Volume of absorbing reagent (deionized water) in impinger through which methanol sample from dilute exhaust is drawn, ml.

(xiv) AVD=Volume of absorbing reagent (deionized water) in impinger through which methanol sample from dilution air is drawn, ml.

(xv) 1=first impinger.

(xvi) 2=second impinger.

(xvii) 1 = first impinger.

(xviii) 2 = second impinger.

(6)(i) $HCHO_{mass}$ = Formaldehyde emissions corrected for background, in grams per test phase.

(ii) $Density_{HCHO}$=Density of formaldehyde is 35.36 g/ft^3- carbon atom (1.249 kg/m^3-carbon atom), at 68 °F (20 °C) and 760 mm Hg (101.3 kPa) pressure.

(iii)(A) $HCHO_{conc}$ = Formaldehyde concentration of the dilute exhaust corrected for background, in ppm.

(B) $HCHO_{conc} = C_{HCHOe} - C_{HCHOd}\ (1 - (1/DF))$.

Where:

(iv)(A) C_{HCHOe} = Formaldehyde concentration in dilute exhaust, in ppm.

(B)

$$C_{HCHOe} = \frac{4.069 \times 10^{-2} \times C_{FDE} \times V_{AE} \times Q \times T_{EF}}{V_{SE} \times P_B}$$

(v)(A) C_{HCHOd} = Formaldehyde concentration in dilution air in ppm.

(B)

$$C_{HCHOd} = \frac{4.069 \times 10^{-2} \times C_{FDA} \times V_{AA} \times Q \times T_{DF}}{V_{SA} \times P_B}$$

(vi) C_{FDE} = Concentration of DNPH derivative of formaldehyde from dilute exhaust sample in sampling solution, µg/ml.

(vii) V_{AE} = Volume of sampling solution for dilute exhaust formaldehyde sample, ml.

(viii)(A) Q = Ratio of molecular weights of formaldehyde to its DNPH derivative.

(B) Q = 0.1429.

(ix) T_{EF} = Temperature of formaldehyde sample withdrawn from dilute exhaust, °R.

(x) V_{SE} = Volume of formaldehyde sample withdrawn from dilute exhaust, ft^3.

(xi) P_B = Barometric pressure during test, mm Hg.

(xii) C_{FDA} = Concentration of DNPH derivative of formaldehyde from dilution air sample in sampling solution, µg/ml.

(xiii) V_{AA} = Volume of sampling solution for dilution air formaldehyde sample, ml.

(xiv) T_{DF} = Temperature of formaldehyde sample withdrawn from dilution air, °R.

(xv) V_{SA} = Volume of formaldehyde sample withdrawn from dilution air, ft^3.

(7)(i) $DF = 13.4/[CO_{2e}+(HC_e+CO_e)\ 10^{-4}]$ for petroleum-fueled vehicles.

(ii) For methanol-fueled vehicles, where fuel composition is $C_x\ H_y\ O_z$ as measured, or calculated, for the fuel used:

$$DF = \frac{(100)\dfrac{x}{x + y/2 + 3.76\ (x + y/2 - z/2)}}{CO_{2e} + \left(HC_e + CO_e + CH_3OH_e + HCHO_e\right) \times 10^{-4}}$$

(iii)

$$DF = \frac{100 \times \dfrac{x}{x + y/2 + 3.76(x + y/4)}}{CO_{2e} + \left(NMHC_e + CH_{4e} + CO_e\right) \times 10^{-4}}$$

for natural gas-fueled or liquefied petroleum gas-fueled vehicles where fuel composition is C_x H_y as measured for the fuel used.

(iv)(A) K_H=Humidity correction factor.

(B) $K_H=1/[1-0.0047(H-75)]$.

(C) *For SI units,* $K_H=1\times[1-0.0329(H\times10.71)]$.

Where:

(v)(A) H=Absolute humidity in grains (grams) of water per pound (kilogram) of dry air.

(B) $H=[(43.478)R_a \times P_d]/[P_B-(P_d \times R_a/100)]$.

(C) *For SI units,* $H=[(6.211)R_a \times P_d]/[P_B\times(P_d \times R_a/100)]$.

(vi) R_a=Relative humidity of the ambient air, percent.

(vii) P_d=Saturated vapor pressure, mm Hg (kPa) at the ambient dry bulb temperature.

(viii) P_B=Barometric pressure, mm Hg (kPa).

(ix)(A) V_{mix}=Total dilute exhaust volume in cubic feet per test phase corrected to standard conditions (528°R (293 °K) and 760 mm Hg (101.3 kPa)).

(B) For PDP-CVS, V_{mix} is:

$$V_{mix} = \frac{V_O \times N \times \left(P_B - P_4\right) \times 528}{760 \times T_P}$$

(C) *For SI units,*

$$V_{mix} = \frac{V_o \times N \times \left(P_B - P_4\right) \times 293}{101.3 \times T_p}$$

Where:

(x) V_o=Volume of gas pumped by the positive displacement pump, in cubic feet (m^3) per revolution. This volume is dependent on the pressure differential across the positive displacement pump.

(xi) N=Number of revolutions of the positive displacement pump during the test phase while samples are being collected.

(xii) P_B=Barometric pressure, mm Hg (kPa).

(xiii) P_4=Pressure depression below atmospheric measured at the inlet to the positive displacement pump, in mm Hg (kPa) (during an idle mode).

(xiv) T_p=Average temperature of dilute exhaust entering positive displacement pump during test, °R(°K).

(8)(i) $NMHC_{conc}=HC_{conc}-(r_{CH4}\times CH_{4conc})$.

(ii) $Density_{NMHC}$=The density of non-methane hydrocarbon.

(A) *For gasoline-fuel and diesel-fuel;* $Density_{NMHC}$=16.33 g/ft^3-carbon atom (0.5768 kg/m^3-carbon atom), assuming an average carbon to hydrogen ratio of 1:1.85 at 68 °F (20 °C) and 760 mm Hg (101.3 kPa) pressure.

(B) For natural gas and liquefied petroleum gas fuel; $Density_{NMHC}$=1.1771(12.011+H/C(1.008))g/ft^3-carbon atom (0.04157(12.011+H/C(1.008))kg/m^3-carbon atom), where H/C is the hydrogen to carbon ratio of the non-methane hydrocarbon components of the test fuel, at 68 °F (20 °C) and 760 mm Hg (101.3 kPa) pressure.

(iii)(A) CH_{4conc} = Methane concentration of the dilute exhaust sample corrected for background, in ppm carbon equivalent.

(B) $CH_{4conc} = CH_{4e} - CH_{4d}(1 - 1/DF)$

Where:

(iv) CH_{4e} = Methane exhaust bag concentration in ppm carbon equivalent.

(v) CH_{4d} = Methane concentration of the dilution air in ppm carbon equivalent.

(vi) rCH4=HC FID response to methane as measured in § 86.121(d).

(9)(i) CH_{4mass}=Methane emissions, in grams per test phase.

(ii) $Density_{CH4}$=Density of methane is 18.89 g/ft^3-carbon atom (0.6672 kg/m^3-carbon atom), at 68 °F (20 °C) and 760 mm Hg (101.3 kPa) pressure.

(d) For petroleum-fueled vehicles, example calculation of mass values of exhaust emissions using positive displacement pump:

(1) For the ''transient'' phase of the cold start test assume the following: V_o = 0.29344 ft^{3}rev; N = 10,485; R = 48.0 pct; R_a = 48.2 percent; P_B = 762 mm Hg; P_d = 22.225 mm Hg; P_4 = 70 mm Hg; T_p = 570 °R; HC_e = 105.8 ppm, carbon equivalent; NOx_e = 11.2 ppm; CO_{em} = 306.6 ppm; CO_{2e} = 1.43 percent; CH_{4e} = 10.74 ppm; HC_d = 12.1 ppm; NOx_d = 0.8 ppm; CO_{dm} = 15.3 ppm; CO_{2d} = 0.032 percent; CH_{4d} = 2.20 ppm; D_{ct} = 3.598 miles.

Then:

(i) V_{mix} = (0.29344)(10,485)(762-70)(528)/(760)(570) = 2595.0 ft^3 per test phase.

(ii) H = (43.478)(48.2)(22.225)/762 − (22.225)(48.2/100) = 62 grains of water per pound of dry air.

(iii) K_H = 1/[1 − 0.0047(62-75)] = 0.9424.

(iv) CO_e = [1-0.01925(1.43) − 0.000323(48)](306.6) = 293.4 ppm.

(v) CO_d = [1 − 0.000323(48)](15.3) = 15.1 ppm.

(vi) DF = 13.4/[1.43+10^{-4}(105.8+293.4)] = 9.116.

(vii) HC_{conc} = 105.8-12.1(1 − 1/9.116) = 95.03 ppm.

(viii) HC_{mass} = (2595)(16.33)(95.03/1,000,000) = 4.027 grams per test phase.

(ix) NOx_{conc} = 11.2 − 0.8(1 − 1/9.116) = 10.49 ppm.

(x) NOx_{mass} = (2595)(54.16)(10.49/1,000,000)(0.9424) = 1.389 grams per test phase.

(xi) CO_{conc} = 293.4 − 15.1(1 − 1/9.116) = 280.0 ppm.

(xii) CO_{mass} = (2595)(32.97)(280/1,000,000) = 23.96 grams per test phase.

(xiii) CO_{2conc} = 1.43 − 0.032(1 − 1/9.116) = 1.402 percent.

(xiv) CO_{2mass} = (2595.0)(51.85)(1.402/100) = 1886 grams per test phase.

(xv) CH_{4conc} = 10.74 − 2.2 (1 − 1/9.116) = 8.78 ppm.

(xvi) $NMHC_{conc}$ = 95.03 − 8.78 = 86.25 ppm.

(xvii) $NMHC_{mass}$ = (2595)(16.33)(86.25)/1,000,000 = 3.655 grams per test phase.

(2) For the stabilized portion of the cold start test assume that similar calculations resulted in the following:

(i) HC_{mass} = 0.62 gram per test phase.

(ii) NOx_{mass} = 1.27 grams per test phase.

(iii) CO_{mass} = 5.98 grams per test phase.

(iv) CO_{2mass} = 2346 grams per test phase.

(v) D_s = 3.902 miles.

(vi) $NMHC_{mass}$ = 0.50 gram per test phase.

(3) For the ''transient'' portion of the hot start test assume that similar calculations resulted in the following:

(i) HC_{mass} = 0.51 gram per test phase.

(ii) NOx_{mass} = 1.38 grams per test phase.

(iii) CO_{mass} = 5.01 grams per test phase.

(iv) CO_{2mass} = 1758 grams per test phase.

(v) D_{ht} = 3.598 miles.

(vi) $NMHC_{mass}$ = 0.44 grams per test phase.

(4) Weighted mass emission results:

(i) HC_{wm} = 0.43[(4.027+0.62)/(3.598+3.902)]+0.57[(0.51+0.62)/(3.598+3.902)] = 0.352 gram per vehicle mile.

(ii) NOx_{wm} = 0.43[(1.389+1.27)/(3.598+3.902)] + 0.57[(1.38+1.27)/(3.598+3.902)] = 0.354 gram per vehicle mile.

(iii) CO_{wm} = 0.43[(23.96+5.98)/(3.598+3.902)] + 0.57[(5.01+5.98)/(3.598+3.902)] = 2.55 grams per vehicle mile.

(iv) CO_{2wm} = 0.43[(1886+2346)/(3.598+3.902)+0.57[(1758+2346)/(3.598+3.902)] = 555 gram per vehicle mile.

(v) $NMHC_{wm}$ = 0.43[(3.655 + 0.50)/(3.598 + 3.902)] + 0.57[(0.44 + 0.50)/(3.598 + 3.902)] = 0.310 gram per vehicle mile.

(e) For methanol-fueled vehicles with measured fuel composition of $CH_{3.487}O_{0.763}$, example calculation of exhaust emissions using positive displacement pump:

(1) For the ''transient'' phase of the cold start test assume the following:

V_0=0.29344 ft^3 rev; N=25,801; R=37.5 pct; Ra=37.5 percent; P_B=725.42 mm Hg; P_d=22.02 mm Hg; P_4=70 mm Hg; T_p 570 deg.R; FID HC_e=14.65 ppm, carbon equivalent; r=0.788; T_{EM}=527.67 deg.R; V_{EM}=0.2818 ft^3; C_{S1}=7.101; AV_{S1}=15.0 ml; C_{S2}=0.256; AV_{S2}=15.0 ml; T_{DM}=527.67 deg.R; V_{DM}=1.1389 ft^3; C_{D1}=0.439; AV_{D1}=15.0 ml; C_{D2}=0.0; AV_{D2}=15.0 ml; C_{FDE}=8.970 µg/ml; V_{AE}=5.0 ml; Q=0.1429; T_{EF}=527.67 deg.R; V_{SE}=0.2857 ft^3; C_{FDA}=0.39 µg/ml; V_{AA}=5.0 ml; T_{DF}=527.67 deg.R; V_{SA}=1.1043 ft^3; NO_X.=5.273 ppm; CO_{em}=98.8 ppm; CO_{2e}=0.469 pct; CH_{4e}=2.825 ppm; FID HC_d=2.771 ppm; NO_X.=0.146 ppm; CO_{dm}=1.195 ppm; CO_{2d}=0.039 percent; CH_{4d}=2.019 ppm; Dct=3.583 miles.

Then:

(i) V_{mix}=(0.29344)(25,801)(725.42–70)(528)/(760)(570)=6048.1.0 ft^3 per test phase.

(ii) H=(43.478)(37.5)(22.02)/[725.42-(22.02×37.5/100)]=50 grains of water per pound of dry air.

(iii) K_H=1/[1 − 0.0047(50 − 75)]=0.8951.

(iv) CO_e=[1-(0.01+0.005×3.487)×0.469) − 0.000323(37.5)) ×98.8=96.332 ppm.

(v) CO_d=(1 − 0.000323(37.5))×1.195=1.181 ppm.

(vi) C_{CH3OHe} = (3.813×10^{-2})(527.67)[(7.101)(15.0) + (0.256)(15.0)]/(725.42)(0.2818) = 10.86 ppm.

(vii) HCe=14.65 − (0.788)(10.86)=6.092.

(viii) DF = 100(1/[1 + (3.487/2) + 3.76(1 + (3.487/4) − (0.763/2))])/0.469 + (6.092 + 96.332 + 10.86 + 0.664)(10^{-4}) = 24.939.

(ix) C_{CH3OHd} = (3.813 × 10^{-2})(527.67)[(0.439)(15.0) + (0.0)(15.0)]/(725.42)(1.1389) = 0.16 ppm.

(x) CH_3OH_{conc}=10.86 − 0.16(1–1/24.939)=10.71 ppm.

(xi) CH_3OH_{mass}=6048.1×37.71×(10.71/1,000,000)=2.44 grams per test phase.

(xii) HC_{conc}=[14.65 − (0.788)(10.86)] − [2.771 − (0.788)(0.16)] (1–1/24.94)=3.553 ppm.

(xiii) HC_{mass}=(6048.1)(16.33)(3.553/1,000,000)=0.35 grams per test phase.

(xiv) C_{HCHOe} = 4.069 × 10^{-2}(8.970)(5.0)(0.1429)(527.67)/(0.2857)(725.42) = 0.664 ppm.

(xv) C_{HCHOd} = 4.069 × 10^{-2}(0.39)(5.0)(0.1429)(527.67)/(1.1043)(725.42) = 0.0075 ppm.

(xvi) $HCHO_{conc}$=0.664–0.0075(1–1/24.939)=0.6568 ppm.

(xvii) $HCHO_{mass}$=(6048.1)(35.36)(0.6568/1,000,000)=0.1405 grams per test phase.

(xviii) THCE=0.35+(13.8756/32.042)(2.44)+(13.8756/ 30.0262)(0.1405)=1.47 grams per test phase.

(xix) NO_{Xconc}=5.273 − (0.146)(1–1/24.939)=5.13 ppm.

(xx) NO_{Xmass}=(6048.1)(54.16)(5.13/1,000,000)(0.8951)=1.505 grams per test phase.

(xxi) CO_{conc}=96.332 − 1.181(1–1/24.939)=95.2 ppm.

(xxii) CO_{mass}=(6048.1)(32.97)(95.2/1,000,000)=18.98 grams per test phase.

(xxiii) $CO2_{conc}$=0.469–0.039(1–1/24.939)=0.432 percent.

(xxiv) $CO2_{mass}$=(6048.1)(51.85)(0.432/100)=1353 grams.

(xxv) $CH4_{conc}$=2.825–2.019(1–1/24.939)=0.89 ppm.

(xxvi) $NMHC_{conc}$=3.553 ppm − 0.89 ppm=2.67 ppm.

(xxvii) $NMHC_{mass}$=(6048.1)(16.33)(2.67/1,000,000)=0.263 grams per test phase.

(xxviii) $NMHCE_{mass}$=0.263+(13.8756/32.042)(2.44) + (13.8756/30.0262)(0.1405)=1.39 grams per test phase.

(2) For the stabilized portion of the cold start test assume that similar calculations resulted in the following:

(i) THCE=0.143 grams per test phase.

(ii) NO_{Xmass}=0.979 grams per test phase.

(iii) CO_{mass}=0.365 grams per test phase.

(iv) CO_{2mass}=1467 grams per test phase.

(v) D_s=3.854 miles.

(vi) NMHCE=0.113 grams per test phase.

(3) For the ''transient'' portion of the hot start test assume that similar calculations resulted in the following:

(i) THCE=0.488 grams as carbon equivalent per test phase.

(ii) NO_{Xmass}=1.505 grams per test phase.

(iii) CO_{mass}=3.696 grams per test phase.

(iv) CO_{2mass}=1179 grams per test phase.

(v) D_{ht}=3.577 miles.

(vi) NMHCE=0.426 grams per test phase.

(4) Weighted emission results:

(i) $THCE_{wm}$ = (0.43) × (1.473 + 0.143)/(3.583 + 3.854) + (0.57) × (0.488 + 0.143)/(3.577 + 3.854) = 0.142 grams as carbon equivalent per mile.

(ii) NOx_{wm} = (0.43) × (1.505 + 0.979)/(3.583 + 3.854) + (0.57) × (1.505 + 0.979)/3.577 + 3.854) = 0.344 grams per mile.

(iii) CO_{wm} = (0.43) × (18.983 + 0.365)/(3.583 = 3.854) + (0.57) × (3.696 + 0.365)/(3.577 + 3.854) = 1.43 grams per mile.

(iv) $CO2_{wm}$ = (0.43) × (1353 + 1467)/(3.583 + 3.854) + (0.57) × (1179 + 1467)/(3.577 + 3.854) = 366 grams per mile.

(v) $NMHCE_{wm}$ = (0.43) × (1.386 + 0.113)/(3.583 + 3.854) + (0.57) × (0.426 = 0.113)/(3.577 + 3.854) = 0.128 grams per mile.

[56 FR 25777, June 5, 1991, as amended at 59 FR 39649, Aug. 3, 1994; 59 FR 48511, Sept. 21, 1994; 60 FR 34349, June 30, 1995; 62 FR 47122, Sept. 5, 1997; 70 FR 40434, July 13, 2005]

§ 86.145–82 Calculations; particulate emissions.

(a) The final reported test results for the mass particulate (M_p) in grams/mile shall be computed as follows.

$M_p = 0.43(M_{p1} + M_{p2})/(D_{ct} + D_s) + 0.57(M_{p3} + M_{p2})/(D_{ht} = D_s)$

where:

(1) M_{p1} = Mass of particulate determined from the ''transient'' phase of the cold start test, in grams per test phase. (See § 86.110–82(c)(1) for determination.)

(2) M_{p2} = Mass of particulate determined from the ''stabilized'' phase of the cold start test, in grams per test phase. (See § 86.110–82(c)(1) for determination.)

(3) M_{p3} = Mass of particulate determined from the ''transient'' phase of the hot start test, in grams per test phase. (See § 86.110–82(c)(1) for determination).

(4) D_{ct} = The measured driving distance from the ''transient'' phase of the cold start test, in miles.

(5) D_s = The measured driving distance from the ''stabilized'' phase of the cold start test, in miles.

(6) D_{ht} = The measured driving distance from the ''transient'' phase of the hot start test, in miles.

(b) The mass of particulate for each phase of testing is determined as follows:

$$M_{pj} = \left[V_{mix} + V_{epi}\right]\left[\frac{P_{ei}}{V_{epi}} - \frac{P_b}{V_{bp}}(1 - 1/DF)\right]$$

where:

(1) j = 1, 2 or 3 depending on which phase the mass of particulate is being determined for (i.e., the ''transient'' phase of the cold start test, the ''stabilized'' phase of the cold start test, or the ''transient'' phase of the hot start test).

(2) V_{mix} = Total dilute exhaust volume in cubic meters per test, corrected to standard conditions 528°R (293K) and 29.92 in Hg (101.3 kPa). V_{mix} is further defined in § 86.144.

(3) P_e = mass of particulate per test on the exhaust filter(s), grams.

(4) P_b = mass of particulate on the ''background'' filter, grams.

(i) The background particulate level, P_b, inside the dilution air filter box at EPA is very low. P_b will be assumed = 0, and background particulate samples will not be taken with each exhaust sample. It is recommended that background particulate checks be made periodically to verify the low level.

(ii) Any manufacturer may make the same assumption without prior EPA approval.

(iii) If P_b is assumed = 0, then no background correction is made. The equation for particulate mass emissions then reduces to:

$$M_{pj} = \frac{V_{mix_i} + V_{ep_i} \times P_{e_i}}{V_{ep_i}}$$

(6) V_{ep} = total volume of sample pulled through the filter, cubic feet at standard conditions.

$$V_{ep} = \frac{V_{ap} \times \left(P_{bar} + P_{ip}\right) \times 528}{T_{ip} \times 29.92}$$

where:

(i) V_{ap} = corrected (according to procedure specified in § 85.120) dilute exhaust sample volume, cubic feet.

(ii) P_{bar} = barometric pressure, in Hg.

(iii) P_{ip} = pressure elevation above ambient measured at the inlet to the dilute exhaust sample gas meter or flow instrument, in Hg. (For most gas meters with unrestricted discharge P_{ip} is negligible and can be assumed = 0.)

(iv) T_{ip} = average temperature of the dilute exhaust sample at the inlet to the gas meter or flow instrument, °R.

(7) V_{bp} = total volume of the background sample, cubic feet at standard conditions. (V_{bp} is not required if P_b is assumed = 0.) It is calculated using the following formula:

$$V_{bp} = \frac{V_{ap} \times (P_{bar} + P_{ib}) \times 528}{T_{ib} \times 29.92}$$

where:

(i) V_{ab} = corrected (according to procedure specified in § 85.120) background sample volume, cubic feet.

(ii) P_{bar} = barometric pressure, in. Hg.

(iii) P_{ib} = pressure elevation above ambient measured at the inlet to the background gas meter or flow instrument, in Hg. (For most gas meters with unrestricted discharge P_{ib} is negligible and can be assumed = 0.)

(iv) T_{ib} = average temperature of the background sample at the inlet to the gas meter or flow instrument, °R.

(8) DF = dilution factor. (DF is not required if P_b is assumed = 0.)

[45 FR 14523, Mar. 5, 1980, as amended at 46 FR 50494, Oct. 13, 1981, and 47 FR 49807, Nov. 2, 1982]

§ 86.146–96 Fuel dispensing spitback procedure.

(a) The vehicle is fueled at a rate of 10 gal/min to test for fuel spitback emissions. All liquid fuel spitback emissions that occur during the test are collected in a bag made of a material impermeable to hydrocarbons or methanol. The bag shall be designed and used so that liquid fuel does not spit back onto the vehicle body, adjacent floor, etc., and it must not impede the free flow of displaced gasoline vapor from the orifice of the filler pipe. The bag must be designed to permit passage of the dispensing nozzle through the bag. If the bag has been used for previous testing, sufficient time shall be allowed for the bag to dry out. The dispensing nozzle shall be a commercial model, not equipped with vapor recovery hardware.

(b) Ambient temperature levels encountered by the test vehicle shall be not less than 68 °F nor more than 86 °F. The temperatures monitored during testing must be representative of those experienced by the test vehicle. The vehicle shall be approximately level during all phases of the test sequence to prevent abnormal fuel distribution.

(c) Measure and record the mass of the bag to be used for collecting spitback emissions to the nearest 0.01 gram.

(d) Drain the fuel tank(s) and fill with test fuel, as specified in § 86.113, to 10 percent of the reported nominal fuel tank capacity. The fuel cap(s) shall be installed immediately after refueling.

(e) The vehicle shall be soaked at 80±6 °F (27±3 °C) for a minimum of six hours, then placed, either by being driven or pushed, on a dynamometer and operated through one Urban Dynamometer Driving Schedule (specified in § 86.115 and appendix I of this part). The test vehicle may not be used to set dynamometer horsepower.

(f) Following the preconditioning drive, the vehicle shall be moved or driven at minimum throttle to the refueling area.

(g) All areas in proximity to the vehicle fuel fill orifice and the dispenser nozzle itself shall be completely dry of liquid fuel.

(h) The fuel filler neck shall be snugly fitted with the vented bag to capture any fuel emissions. The fuel nozzle shall be inserted through the bag into the filler neck of the test vehicle to its maximum penetration. The plane of the nozzle's handle shall be perpendicular to the floor of the laboratory.

(i) The fueling procedure consists of dispensing fuel through a nozzle, interrupted by a series of automatic shutoffs. A minimum of 3 seconds shall elapse between any automatic shutoff and subsequent resumption of dispensing. Dispensing may not be manually terminated, unless the test vehicle has already clearly failed the test. The vehicle shall be fueled according to the following procedure:

(1) The fueling operation shall be started within 4 minutes after the vehicle is turned off and within 8 minutes after completion of the preconditioning drive. The average temperature of the dispensed fuel shall be 65 ±5 °F (18 ±3 °C).

(2) The fuel shall be dispensed at a rate of 9.8±0.3 gallons/minute (37.1±1.1 L/min) until the automatic shutoff is activated.

(3) If the automatic shutoff is activated before the nozzle has dispensed an amount of fuel equal to 70 percent of the tank's nominal capacity, the dispensing may be resumed at a reduced

rate. Repeat as necessary until the nozzle has dispensed an amount of fuel equal to at least 70 percent of the tank's nominal capacity.

(4) Once the automatic shutoff is activated after the nozzle has dispensed an amount of fuel equal to 70 percent of the tank's nominal capacity, the fuel shall be dispensed at a rate of 5 ±1 gallons/minute (19 ±4 ℓ/min) for all subsequent dispensing. Dispensing shall be restarted two additional times.

(5) If the nozzle has dispensed an amount of fuel less than 85 percent of the tank's nominal capacity after the two additional dispensing restarts, dispensing shall be resumed, and shall continue through as many automatic shutoffs as necessary to achieve this level. This completes the fueling procedure.

(j) Withdraw the nozzle from the vehicle and the bag, holding the tip of the nozzle upward to avoid any dripping into the bag.

(k) Within 1 minute after completion of the fueling event, the bag shall be folded to minimize the vapor volume inside the bag. The bag shall be folded as quickly as possible to prevent evaporation of collected emissions.

(l) Within 5 minutes after completion of the fueling event, the mass of the bag and its contents shall be measured and recorded (consistent with paragraph (c) of this section). The bag shall be weighed as quickly as possible to prevent evaporation of collected emissions.

[58 FR 16045, Mar. 24, 1993, as amended at 60 FR 43898, Aug. 23, 1995]

§ 86.150–98 Refueling test procedure; overview.

(a) The refueling emissions test procedure described in this and subsequent sections is used to determine the conformity of vehicles with the refueling emissions standards set forth in subpart A of this part for light-duty vehicles and light-duty trucks. The refueling emissions test procedure may be performed as an individual test or in combination with the evaporative and exhaust emissions test sequences of § 86.130–96.

(b) The refueling emissions test is designed to measure hydrocarbon emissions resulting from the generation or displacement of fuel tank vapor during vehicle refueling. The refueling emissions shall be measured by the enclosure technique.

(c) All emission control systems installed on or incorporated in a new motor vehicle shall be functioning during all procedures in this subpart except:

(1) In cases of component malfunction or failure; and

(2) during certain specified fuel drain and fill operations, at which times the refueling emission control canister is disconnected. Maintenance to correct component malfunction or failure shall be authorized in accordance with § 86.098–25.

(d) *For liquefied petroleum gas-fueled vehicles only*. Refueling test procedures for light-duty vehicles and light-duty trucks operated on liquefied petroleum gas are described in § 86.157.

[59 FR 16296, Apr. 6, 1994, as amended at 59 FR 48511, Sept. 21, 1994]

§ 86.151–98 General requirements; refueling test.

(a) The refueling emissions procedure, shown in Figure B98–12, starts with the stabilizing of the vehicle and the loading of the refueling emissions canister(s) to breakthrough, and continues with the vehicle drive for purging of the canister, followed by the refueling emissions measurement. The test is conducted following §§ 86.152–98 through 86.154–98 in order.

(b) Ambient temperature levels encountered by the test vehicle throughout the test sequence shall not be less than 68 °F (20 °C) nor more than 86 °F (30 °C).

(c) The vehicle shall be approximately level during all phases of the test sequence to prevent abnormal fuel distribution.

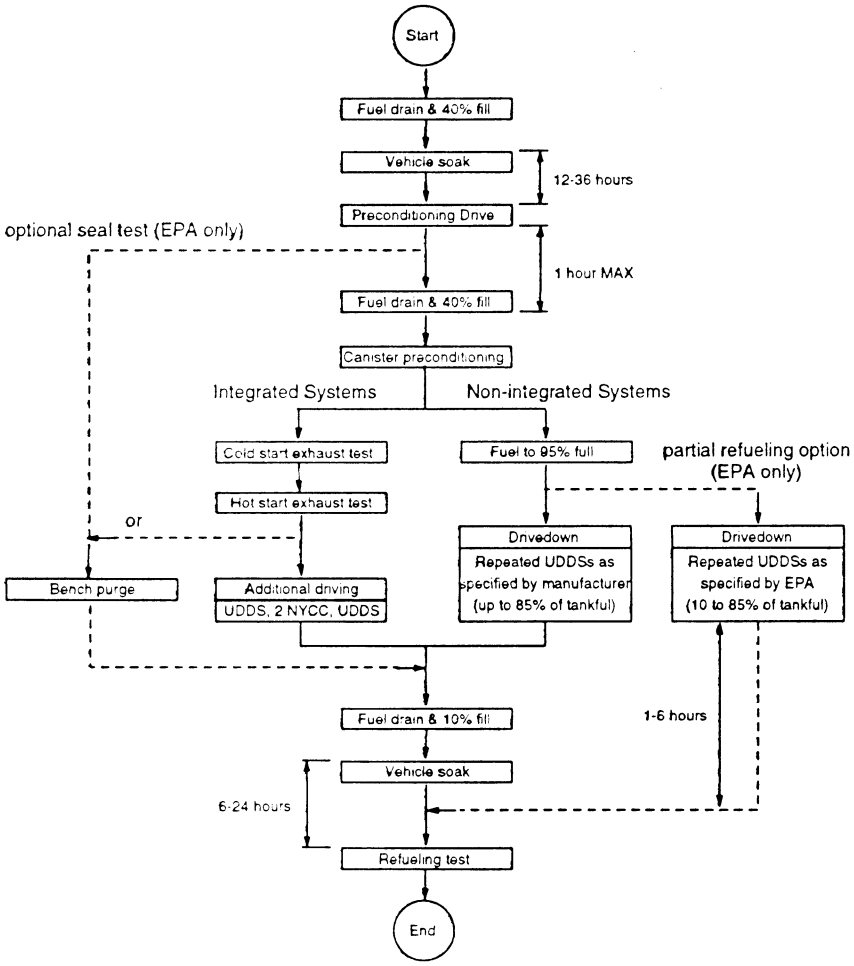

Figure B98-12: Refueling Test Sequence

[59 FR 16296, Apr. 6, 1994]

§ 86.152–98 Vehicle preparation; refueling test.

(a) Provide additional fittings and adapters, as required, to accommodate a fuel drain at the lowest point possible in the tank(s) as installed on the vehicle. The canister shall not be removed from the vehicle, unless access to the canister in its normal location is so restricted that purging and loading can only reasonably be accomplished by removing the canister from the vehicle. Special care shall be taken during this step to avoid damage to the components and the integrity of the fuel system. A replacement canister may be temporarily installed during the soak period while the canister from the test vehicle is preconditioned.

(b) Optionally, provide valving or other means to allow the venting of the refueling vapor line to the atmosphere rather than to the refueling emissions

canister(s) when allowed by this test procedure.

(c) For preconditioning that involves loading the vapor collection canister(s) with butane, provide valving or other means as necessary to allow loading of the canister(s).

[59 FR 16298, Apr. 6, 1994, as amended at 60 FR 43898, Aug. 23, 1995; 70 FR 72927, Dec. 8, 2006]

§ 86.153–98 Vehicle and canister preconditioning; refueling test.

(a) *Vehicle and canister preconditioning.* Vehicles and vapor storage canisters shall be preconditioned in accordance with the preconditioning procedures for the supplemental two-diurnal evaporative emissions test specified in § 86.132–96 (a) through (j). For vehicles equipped with non-integrated refueling emission control systems, the canister must be loaded using the method involving butane loading to breakthrough (see § 86.132–96(j)(1)).

(b) *Seal test.* The Administrator may choose to omit certain canister load and purge steps, and replace them with a bench purge of the refueling canister(s), in order to verify the adequacy of refueling emission control system seals. Failure of this seal test shall constitute a failure of the refueling emission control test. For integrated systems, this bench purge may be performed after the exhaust testing in order to obtain exhaust emission test results. Non-integrated system seal testing shall be performed using paragraph (b)(1) of this section.

(1) *Without the exhaust emission test.* The Administrator may conduct the canister preconditioning by purging the canister(s) with at least 1200 canister bed volumes of ambient air (with humidity controlled to 50±25 grains of water vapor per pound of dry air) maintained at a nominal flow rate of 0.8 cfm directly following the preconditioning drive described in § 86.132–96 (c) through (e). In this case, the canister loading procedures and the vehicle driving procedures described in § 86.132–96 (f) through (j) and in paragraphs (c) through (d) of this section shall be omitted, and the 10 minute and 60 minute time requirements of paragraph (e) of this section shall apply to time after completion of the bench purge. In the case of multiple refueling canisters, each canister shall be purged separately.

(2) *With the exhaust emission test.* The Administrator may conduct the canister preconditioning by purging the canister(s) directly after the exhaust test (see paragraph (c)(1) of this section). The canister shall be purged with at least 1200 canister bed volumes of ambient air (with humidity controlled to 50±25 grains of water vapor per pound of dry air) maintained at a nominal flow rate of 0.8 cfm. In this case, the vehicle driving procedures described in paragraphs (c)(2) through (d) of this section shall be omitted, and the 10 minute and 60 minute time requirements of paragraph (e) of this section shall apply to time after completion of the bench purge. In the case of multiple refueling canisters, each canister shall be purged separately.

(c) *Canister purging; integrated systems.* (1) Vehicles to be tested for exhaust emissions only shall be processed according to §§ 86.135–94 through 86.137–96. Vehicles to be tested for refueling emissions shall be processed in accordance with the procedures in §§ 86.135–94 through 86.137–96, followed by the procedures outlined in paragraph (c)(2) of this section.

(2) To provide additional opportunity for canister purge, conduct additional driving on a dynamometer, within one hour of completion of the hot start exhaust test, by operating the test vehicle through one UDDS, a 2 minute idle, two NYCCs, another 2 minute idle, another UDDS, then another 2 minute idle (see § 86.115–78 and appendix I of this part). Fifteen seconds after the engine starts, place the transmission in gear. Twenty seconds after the engine starts, begin the initial vehicle acceleration of the driving schedule. The transmission shall be operated according to the specifications of § 86.128–79 during the driving cycles. The vehicle's air conditioner (if so equipped) shall be turned off. Ambient temperature shall be controlled as specified in § 86.151–98. It is not necessary to monitor and/or control in-tank fuel temperatures.

(i) The fixed-speed fan specified in § 86.135–94(b) may be used for engine cooling. If a fixed-speed fan is used, the vehicle's hood shall be opened.

(ii) Alternatively, the roadspeed-modulated fan specified in §86.107–96(d)(1) may be used for engine cooling. If a road-speed modulated fan is used, the vehicle's hood shall be closed.

(d) *Canister purging: non-integrated systems.* Within one hour of completion of canister loading to breakthrough, the fuel tank(s) shall be further filled to 95 percent of nominal tank capacity determined to the nearest one-tenth of a U.S. gallon (0.38 liter) with the fuel specified in §86.113–94. During this fueling operation, the refueling emissions canister(s) shall be disconnected, unless the manufacturer specifies that the canister(s) should not be disconnected. Following completion of refueling, the refueling emissions canister(s) shall be reconnected, if the canister was disconnected during refueling. Special care shall be taken during this step to avoid damage to the components and the integrity of the fuel system. Vehicle driving to purge the refueling canister(s) shall be performed using either the chassis dynamometer procedure or the test track procedure, as described in paragraphs (d)(1) and (d)(2) of this section. The Administrator may choose to shorten the vehicle driving for a partial refueling test as described in paragraph (d)(3) of this section. For vehicles equipped with dual fuel tanks, the required volume of fuel shall be driven out of one tank, the second tank shall be selected as the fuel source, and the required volume of fuel shall be driven out of the second tank.

(1) *Chassis dynamometer procedure.* (i) Vehicle driving on a chassis dynamometer shall consist of repeated drives with the UDDS until 85 percent of fuel tank capacity has been consumed. Driving in testing performed by manufacturers may be terminated before 85 percent of the fuel tank capacity has been consumed, provided that driving is not terminated partway through a UDDS cycle. Driving in testing performed by the Administrator may be terminated after the same number of UDDS cycles as driven in the manufacturer's certification testing.

(ii) Except with the advance approval of the Administrator, the number of UDDSs required to consume 85 percent of tank fuel capacity (total capacity of both tanks when the vehicle is equipped with dual fuel tanks) shall be determined from the fuel economy on the UDDS applicable to the test vehicle and from the number of gallons to the nearest 0.1 gallon (0.38 liter) that constitutes 85 percent of tank volume. If this ''fuel consumed point'' occurs partway through a UDDS cycle, the cycle shall be completed in its entirety.

(iii) For vehicles equipped with dual fuel tanks, fuel switching from the first tank to the second tank shall occur at the 10 percent volume of the first tank regardless of the point in the UDDS cycle at which this occurs.

(iv) If necessary to accommodate work schedules, the engine may be turned off and the vehicle parked on the dynamometer. The vehicle may be parked off of the dynamometer to facilitate maintenance or repairs if required.

(v) During the driving on the dynamometer, a cooling fan(s) shall be positioned as described in §86.135–94(b).

(2) *Test track procedure.* (i) Vehicle driving on a test track shall consist of repeated drives with the UDDS until 85 percent of fuel tank capacity has been consumed. Driving performed by manufacturers may be terminated before 85 percent of the fuel tank capacity has been consumed, provided that driving is not terminated partway through a UDDS cycle. Driving performed by the Administrator may be terminated after the same number of UDDS cycles as driven in the manufacturer's certification testing.

(ii) If the distance from the emission laboratory to the test track is less than 5 miles (8.05 km) the vehicle may be driven to the test track at a speed not to exceed 25 mph. If the distance is greater than 5 miles (8.05 km) the vehicle shall be moved to the test track with the engine off.

(iii) Except with the advance approval of the Administrator, the number of UDDSs required to consume 85 percent of tank fuel capacity (total capacity of both tanks when the vehicle is equipped with dual fuel tanks) shall be determined from the fuel economy on the UDDS applicable to the test vehicle and from the number of gallons to the nearest 0.1 gallon (0.38 liter) that

constitutes 85 percent of tank volume. If this ''fuel consumed point'' occurs partway through a UDDS cycle, the cycle shall be completed in its entirety.

(iv) The vehicle shall be driven at a speed not to exceed 25 mph from the test track to the laboratory provided the distance from the test track to the laboratory does not exceed 5 miles (8.05 km). If the distance from the test track to the emission laboratory is greater than 5 miles (8.05 km) the vehicle shall be moved from the test track with the engine off.

(v) For vehicles equipped with dual fuel tanks, fuel switching from the first tank to the second tank shall occur at the 10 percent volume of the first tank regardless of the point in the UDDS cycle at which this occurs.

(vi) If necessary to accommodate work schedules, the engine may be turned off and the vehicle parked on the test track. The vehicle may be parked off of the test track to facilitate maintenance or repairs if required. If the vehicle is moved from the test track, it shall be returned to the track with the engine off when mileage accumulation is to be resumed.

(3) *Drive schedule for partial refueling test.* The Administrator may conduct a partial refueling test involving a shortening of the drive procedures described in paragraphs (d) (1) and (2) of this section and a modified soak and refueling procedure as described in paragraph (e) of this section and § 86.154–98(e)(7)(i). The drive shall be performed as described in paragraph (d) (1) or (2) of this section except that the drive shall be terminated when at least 10 percent but no more than 85 percent of the fuel tank nominal capacity has been consumed and not partway through a UDDS cycle. The amount of fuel consumed in the drive shall be determined by multiplying the number of UDDSs driven by the mileage accumulated per UDDS and dividing by the fuel economy for the UDDS applicable to the test vehicle.

(e) *Vehicle cool down*—(1) *Partial refueling test.* If the Administrator is conducting the non-integrated system partial refueling test, after the driving procedure specified in paragraph (d)(3) of this section, the vehicle shall be parked (without starting the engine) and soaked at 80±3 °F (27±1.7 °C) for a minimum of 1 hour and a maximum of 6 hours.

(2) *For all other refueling emission tests.* Within 10 minutes of completion of refueling emissions canister stabilization (see paragraph (c) or (d) of this section), the refueling emissions canister(s) shall be disconnected, unless the manufacturer specifies that the refueling canister(s) should not be disconnected. Within 60 minutes of completion of refueling emissions canister stabilization (see paragraph (c) or (d) of this section), the vehicle fuel tank(s) shall be drained, the fuel tank(s) fueled to 10 percent of nominal tank capacity determined to the nearest one-tenth of a U.S. gallon (0.38 liter) with the specified fuel, and the vehicle parked (without starting the engine) and soaked at 80±3 °F (27±1.7 °C) for a minimum of 6 hours and a maximum of 24 hours.

[59 FR 16298, Apr. 6, 1994, as amended at 60 FR 43898, Aug. 23, 1995; 70 FR 72927, Dec. 8, 2005]

§ 86.154–98 Measurement procedure; refueling test.

(a) The refueling test measurement procedure described in this section immediately follows the vehicle and canister preconditioning described in § 86.153–98.

(b) The refueling emission enclosure shall be purged for several minutes immediately prior to the test. Warning: If at any time the concentration of hydrocarbons, of methanol, or of methanol and hydrocarbons exceeds 15,000 ppm C, the enclosure should be immediately purged. This concentration provides a 4:1 safety factor against the lean flammability limit.

(c)(1) The FID (or HFID) hydrocarbon analyzer, and additional analyzer, if needed, shall be zeroed and spanned immediately prior to the test.

(2) For methanol-fueled vehicles only, impingers charged with known volumes of pure deionized water shall be placed in the methanol sampling system.

(d) If not already on, the enclosure mixing fan and the spilled fuel mixing blower shall be turned on at this time.

(e) The refueling emission measurement portion of the refueling test shall be performed as follows:

(1) The line from the fuel tank(s) to the refueling emissions canister(s) shall be connected.

(2) The test vehicle, with the engine shut off, shall be moved into the enclosure. The test vehicle windows and luggage compartment shall be opened if not already open.

(3) An electrical ground shall be attached to the vehicle. The vehicle fuel filler cap shall be removed and the enclosure door shall be closed and sealed within two minutes of cap removal. The FID (or HFID) trace shall be allowed to stabilize.

(4) The dispensed fuel temperature recording system shall be started.

(5)(i) Within 10 minutes of closing and sealing the doors, analyze enclosure atmosphere for hydrocarbons and record. This is the initial (time=0 minutes) hydrocarbon concentration, C_{HCi}, required in § 86.143–96.

(ii) For methanol-fueled vehicles only, measure the initial concentration of methanol as described in § 86.133–96(i)(6).

(6) Within one minute of obtaining the initial FID (or HFID) reading, and methanol reading if applicable, the fuel nozzle shall be inserted into the filler neck of the test vehicle, to its maximum penetration, and the refueling operation shall be started. The plane of the nozzle's handle shall be approximately perpendicular to the floor of the laboratory. The fuel shall be dispensed at a temperature of 67±1.5 °F (19.4±0.8 °C) and at a dispensing rate of 9.8±0.3 gal/min (37.1±1.1 liter/min). In testing conducted by the Administrator, a lower dispensing rate (no lower than 4.0 gal/min (15.1 liter/min)) may be used.

(7)(i) *Partial refueling test*. If the Administrator conducts the non-integrated system partial refueling test, the fuel flow shall continue until the amount of fuel pumped is equal to the fuel consumed during the driving, as determined in accordance with § 86.153–98(d)(3). The final volume of fuel dispensed must be within one-tenth of a U.S. gallon (0.38 liter) of the targeted amount. If automatic nozzle shut-off occurs prior to this point, the nozzle shall be reactivated within 15 seconds and fuel dispensing continued as needed. A minimum of 3 seconds shall elapse between any automatic shutoff and subsequent resumption of dispensing.

(ii) *For all other refueling tests*. The fuel flow shall continue until the refueling nozzle automatic shut-off is activated. The amount of fuel dispensed must be at least 85 percent of nominal fuel tank volume, determined to the nearest one-tenth of a U.S. gallon (0.38 liter). If automatic nozzle shut-off occurs prior to this point, the nozzle shall be reactivated within 15 seconds and fuel dispensing continued as needed. A minimum of 3 seconds shall elapse between any automatic shutoff and subsequent resumption of dispensing. Dispensing may not be manually terminated, unless the test vehicle has already clearly failed the test.

(8)(i) The final reading of the evaporative enclosure FID analyzer shall be taken 60±5 seconds following the final shut-off of fuel flow. This is the final hydrocarbon concentration, C_{HCf}, required in § 86.143–96. The elapsed time, in minutes, between the initial and final FID (or HFID) readings shall be recorded.

(ii) *For methanol-fueled vehicles only*. Measure the final concentration of methanol as described in § 86.133–96(m)(2).

(9) For vehicles equipped with more than one fuel tank, the procedures described in this section shall be performed for each fuel tank.

[59 FR 16299, Apr. 6, 1994, as amended at 60 FR 43898, Aug. 23, 1995]

§ 86.155–98 Records required; refueling test.

The following information shall be recorded with respect to each test:

(a) Test number.

(b) System or device tested (brief description).

(c) Date and time of day.

(d) Instrument operated.

(e) Operator.

(f) Vehicle: ID number, manufacturer, model year, engine family, evaporative/refueling emission family, refueling emission control system, refueling emissions canister continuous drive purge miles and number of

UDDSs driven for non-integrated systems, fuel system (including fuel tank(s) capacity and location), basic engine description (including displacement, number of cylinders, turbocharger (if used), and catalyst usage), engine code, and odometer reading.

(g) All pertinent instrument information including nozzle and fuel delivery system description. As an alternative, a reference to a vehicle test cell number may be used, with advance approval of the Administrator, provided test cell calibration records show the pertinent instrument information.

(h) Recorder charts: Identify zero, span, and enclosure gas sample traces.

(i) Enclosure barometric pressure and ambient temperature: a central laboratory barometer may be used, *provided* that individual test cell barometric pressures are shown to be within ±0.1 percent of the barometric pressure at the central barometer location.

(j) Temperatures: Soak area; dispensed fuel, initial and final.

(k) Fuel dispensing rate(s).

(l) Dispensed fuel volume.

(m) For methanol-fueled vehicles:

(1) Volume of sample passed through the methanol sampling system and the volume of deionized water in each impinger.

(2) The methanol concentration in the reference sample and the peak area from the GC analysis of the reference sample.

(3) The peak area of the GC analyses of the test samples (methanol).

(n) All additional information necessary for the calculations specified in § 86.156–98.

[59 FR 16300, Apr. 6, 1994]

§ 86.156–98 Calculations; refueling test.

(a) The calculation of the net hydrocarbon mass change and methanol mass change (if applicable) in the enclosure is used to determine refueling mass emissions. The mass is calculated from initial and final hydrocarbon and methanol (if applicable) concentrations in ppm carbon, initial and final enclosure ambient temperatures, initial and final barometric pressures, and net enclosure volume using the equations of § 86.143–96. For vehicles with multiple tanks, the results for each tank shall be calculated and then summed to determine overall refueling emissions.

(b) The final results for comparison with the refueling control emission standard shall be computed by dividing the total refueling mass emissions by the total gallons of fuel dispensed in the refueling test (see § 86.154–98(e)(7)(ii)).

(c) The results of all emission tests shall be rounded, in accordance with ASTM E 29–67 (reapproved 1980) (as referenced in § 86.094–28(a)(4)(i)(B)(*2*)(*ii*)) to the number of decimal places contained in the applicable emission standard expressed to one additional significant figure.

[59 FR 16300, Apr. 6, 1994]

§ 86.157–98 Refueling test procedures for liquefied petroleum gas-fueled vehicles.

(a) *Equipment.* (1) The sampling and analytical system shall meet the specifications in § 86.107–98(a) through (i).

(2) The refueling equipment nozzle specifications shall meet the requirements described in § 80.32.

(b) *General requirements.* (1) The refueling test procedure for light-duty liquefied petroleum gas-fueled vehicles and trucks starts with the preconditioning of the vehicle followed by a refueling emissions measurement. The test is conducted by following paragraphs (c) through (f) of this section in order.

(2) Ambient temperature levels encountered by the test vehicle throughout the test sequence shall not be less than 68 °F (20 °C) nor more than 86 °F (30 °C).

(3) The vehicle shall be approximately level during all phases of the test sequence to prevent abnormal fuel distribution.

(c) *Vehicle preconditioning.* (1) The vehicle fuel tanks are to be filled with fuel that meets the specifications in § 86.113. Fuel tanks shall be filled to 10 percent of nominal fuel tank capacity, determined to the nearest one-tenth of a U.S. gallon (0.38 liter).

(2) The vehicle shall be parked (without starting the engine) within the temperature range specified in paragraph (a)(2) of this section for a minimum of one hour and a maximum of six hours.

(d) *Measurement procedure.* (1) The steps prior to the actual refueling event described in § 86.154–98(b) through (e)(5) shall be performed.

(2) Within one minute of obtaining the initial FID (or HFID) reading, the dispensed fuel nozzle shall be attached to the vehicle fuel receptacle, and the refueling operation shall be started. If the vehicle is equipped with a fixed liquid level gauge or other gauge or valve which could be opened to release fuel or fuel vapor during refueling, and has not received an exemption as outlined in §§ 86.098–28(h), 86.001–28(h) or 86.004–28(h), the fixed level gauge or other gauges or valves shall be opened after the dispensing nozzle is attached, but prior to the start of the refueling operation. The dispensed fuel must be at a temperature stabilized to approximately the same temperature as the vehicle was in paragraph (c)(2) of this section. The dispensing rate must be typical of in-use dispensing rates for liquefied petroleum gas into light-duty vehicles and trucks.

(3) The fuel flow shall continue until the amount of fuel dispensed is at least 85 percent of nominal fuel tank capacity, determined to the nearest one-tenth of a U.S. gallon (0.38 liter).

(4) Following the fuel shut-off the fixed liquid level gauge or other gauges or valves, if open, shall be closed and the nozzle disconnected.

(5) The final reading of the evaporative enclosure FID (or HFID) analyzer shall be taken 60 ±5 seconds following the disconnect of the refueling nozzle. This is the final hydrocarbon concentration, C_{HCf}, required in § 86.143. The elapsed time, in minutes, between the initial and final FID (or HFID) readings shall be recorded.

(6) For vehicles equipped with more than one fuel tank, the procedures described in this section shall be performed for each fuel tank.

(e) *Records required.* (1) Test: test number, system or device tested (brief description), date and time of day, instrument operated, operator, enclosure barometric pressure and temperature, recorder charts (identify zero, span, and enclosure gas traces), fuel dispensing rate(s) and dispensed fuel volume.

(2) Vehicle: ID number, manufacturer, model year, engine family, evaporative/refueling emission family, fuel tank(s) capacity, basic fuel system description and odometer reading.

(3) All pertinent instrument information including nozzle and fuel delivery system description. As an alternative, a reference to a vehicle test cell number may be used, with advance approval of the Administrator, provided test cell calibration records show the pertinent instrument information.

(4) All additional information necessary for the calculations specified in paragraph (f) of this section.

(f) *Calculations.* (1) The calculation of the net hydrocarbon mass change in the enclosure is used to determine refueling mass emissions. The mass is calculated from initial and final hydrocarbon concentrations in ppm carbon, initial and final enclosure ambient temperatures, initial and final barometric pressures and net volume using the equations of § 86.143. For vehicles with multiple tanks, the results for each tank shall be calculated and then summed to determine overall refueling emissions.

(2) The final results for comparison with the refueling control emission standard shall be computed by dividing the total refueling mass emissions by the total gallons of fuel dispensed in the refueling test (see paragraph (d)(3) of this section).

(3) The results of all emission tests shall be rounded, in accordance with ASTM E 29–67 to the number of decimal places contained in the applicable emission standard expressed to one additional significant figure. This procedure has been incorporated by reference (see § 86.1).

[59 FR 48511, Sept. 21, 1994]

§ 86.158–00 Supplemental Federal Test Procedures; overview.

The procedures described in §§ 86.158–00, 86.159–00, 86.160–00, and 86.162–00 discuss the aggressive driving (US06) and air conditioning (SC03) elements of the Supplemental Federal Test Procedures (SFTP). These test procedures consist of two separable test elements: A sequence of vehicle operation that tests exhaust emissions with a driving schedule (US06) that tests exhaust

emissions under high speeds and accelerations (aggressive driving); and a sequence of vehicle operation that tests exhaust emissions with a driving schedule (SC03) which includes the impacts of actual air conditioning operation. These test procedures (and the associated standards set forth in subpart S of this part) are applicable to light-duty vehicles and light-duty trucks.

(a) Vehicles are tested for the exhaust emissions of THC, CO, NO_X. CH_4, and CO_2. For diesel-cycle vehicles, THC is sampled and analyzed continuously according to the provisions of § 86.110.

(b) Each test procedure follows the vehicle preconditioning specified in § 86.132–00.

(c) *US06 Test Cycle*. The test procedure for emissions on the US06 driving schedule (see § 86.159–00) is designed to determine gaseous exhaust emissions from light-duty vehicles and light-duty trucks while simulating high speed and acceleration on a chassis dynamometer (aggressive driving). The full test consists of preconditioning the engine to a hot stabilized condition, as specified in § 86.132–00, and an engine idle period of 1 to 2 minutes, after which the vehicle is accelerated into the US06 cycle. A proportional part of the diluted exhaust is collected continuously for subsequent analysis, using a constant volume (variable dilution) sampler or critical flow venturi sampler.

(d) *SC03 Test Cycle*. The test procedure for determining exhaust emissions with the air conditioner operating (see § 86.160–00) is designed to determine gaseous exhaust emissions from light-duty vehicles and light-duty trucks while simulating an urban trip during ambient conditions of 95 °F, 100 grains of water/pound of dry air (approximately 40 percent relative humidity), and a solar heat load intensity of 850 W/m^2. The full test consists of vehicle preconditioning (see § 86.132–00 paragraphs (o) (1) and (2)), an engine key-off 10 minute soak, an engine start, and operation over the SC03 cycle. A proportional part of the diluted exhaust is collected continuously during the engine start and the SC03 driving cycle for subsequent analysis, using a constant volume (variable dilution) sampler or critical flow venturi sampler.

(e) The emission results from the aggressive driving test (§ 86.159–00), air conditioning test (§ 86.160–00), and a FTP test (§ 86.130–00 (a) through (d) and (f)) (conducted on a large single roll or equivalent dynamometer) are analyzed according to the calculation methodology in § 86.164–00 and compared to the applicable SFTP emission standards in subpart A of this part (§§ 86.108–00 and 86.109–00).

(f) These test procedures may be run in any sequence that maintains the applicable preconditioning elements specified in § 86.132–00.

[61 FR 54894, Oct. 22, 1996, as amended at 70 FR 40434, July 13, 2005]

§ 86.159–00 Exhaust emission test procedures for US06 emissions.

(a) *Overview*. The dynamometer operation consists of a single, 600 second test on the US06 driving schedule, as described in appendix I, paragraph (g), of this part. The vehicle is preconditioned in accordance with § 86.132–00, to bring it to a warmed-up stabilized condition. This preconditioning is followed by a 1 to 2 minute idle period that proceeds directly into the US06 driving schedule during which continuous proportional samples of gaseous emissions are collected for analysis. If engine stalling should occur during cycle operation, follow the provisions of § 86.136–90 (engine starting and restarting). For gasoline-fueled Otto-cycle vehicles, the composite samples collected in bags are analyzed for THC, CO, CO_2, CH_4, and NO_X. For petroleum-fueled diesel-cycle vehicles, THC is sampled and analyzed continuously according to the provisions of § 86.110. Parallel bag samples of dilution air are analyzed for THC, CO, CO_2, CH_4, and NO_X.

(b) *Dynamometer activities*. (1) All official US06 tests shall be run on a large single roll electric dynamometer, or an approved equivalent dynamometer configuration, that satisfies the requirements of § 86.108–00.

(2) Position (vehicle can be driven) the test vehicle on the dynamometer and restrain.

(3) Required US06 schedule test dynamometer inertia weight class selections are determined by the test vehicles test weight basis and corresponding equivalent weight as listed in the tabular information of § 86.129–94(a) and discussed in § 86.129–00 (e) and (f).

(4) Set the dynamometer test inertia weight and roadload horsepower requirements for the test vehicle (see § 86.129–00 (e) and (f). The dynamometer's horsepower adjustment settings shall be set to match the force imposed during dynamometer operation with actual road load force at all speeds.

(5) The vehicle speed as measured from the dynamometer rolls shall be used. A speed vs. time recording, as evidence of dynamometer test validity, shall be supplied on request of the Administrator.

(6) The drive wheel tires may be inflated up to a gauge pressure of 45 psi (310 kPa), or the manufacturer's recommended pressure if higher than 45 psi, in order to prevent tire damage. The drive wheel tire pressure shall be reported with the test results.

(7) The driving distance, as measured by counting the number of dynamometer roll or shaft revolutions, shall be determined for the test.

(8) Four-wheel drive and all-wheel drive vehicles may be tested either in a four-wheel drive or a two-wheel drive mode of operation. In order to test in the two-wheel drive mode, four-wheel drive and all-wheel drive vehicles may have one set of drive wheels disengaged; four-wheel and all-wheel drive vehicles which can be shifted to a two-wheel mode by the driver may be tested in a two-wheel drive mode of operation.

(9) During dynamometer operation, a fixed speed cooling fan with a maximum discharge velocity of 15,000 cfm will be positioned so as to direct cooling air to the vehicle in an appropriate manner with the engine compartment cover open. In the case of vehicles with front engine compartments, the fan shall be positioned within 24 inches (61 centimeters) of the vehicle. In the case of vehicles with rear engine compartments (or if special designs make the above impractical), the cooling fan(s) shall be placed in a position to provide sufficient air to maintain vehicle cooling. The Administrator may approve modified cooling configurations or additional cooling if necessary to satisfactorily perform the test. In approving requests for additional or modified cooling, the Administrator will consider such items as actual road cooling data and whether such additional cooling is needed to provide a representative test.

(c) The flow capacity of the CVS shall be large enough to virtually eliminate water condensation in the system.

(d) Practice runs over the prescribed driving schedule may be performed at test point, provided an emission sample is not taken, for the purpose of finding the appropriate throttle action to maintain the proper speed-time relationship, or to permit sampling system adjustment.

(e) Perform the test bench sampling sequence outlined in § 86.140–94 prior to or in conjunction with each series of exhaust emission measurements.

(f) *Test activities.* (1) The US06 consists of a single test which is directly preceded by a vehicle preconditioning in accordance with § 86.132–00. Following the vehicle preconditioning, the vehicle is idled for not less than one minute and not more than two minutes. The equivalent dynamometer mileage of the test is 8.0 miles (1.29 km).

(2) The following steps shall be taken for each test:

(i) Immediately after completion of the preconditioning, idle the vehicle. The idle period is not to be less than one minute or not greater than two minutes.

(ii) With the sample selector valves in the ''standby'' position, connect evacuated sample collection bags to the dilute exhaust and dilution air sample collection systems.

(iii) Start the CVS (if not already on), the sample pumps, the temperature recorder, the vehicle cooling fan, and the heated THC analysis recorder (diesel-cycle only). The heat exchanger of the constant volume sampler, if used, petroleum-fueled diesel-cycle THC analyzer continuous sample line should be preheated to their respective

operating temperatures before the test begins.

(iv) Adjust the sample flow rates to the desired flow rate and set the gas flow measuring devices to zero.

(A) For gaseous bag samples (except THC samples), the minimum flow rate is 0.17 cfm (0.08 liters/sec).

(B) For THC samples, the minimum FID (or HFID in the case of diesel-cycle vehicles) flow rate is 0.066 cfm (0.031 liters/sec).

(C) CFV sample flow rate is fixed by the venturi design.

(v) Attach the exhaust tube to the vehicle tailpipe(s).

(vi) Start the gas flow measuring device, position the sample selector valves to direct the sample flow into the exhaust sample bag, the dilution air sample bag, turn on the petroleum-fueled diesel-cycle THC analyzer system integrator, mark the recorder chart, and record both gas meter or flow measurement instrument readings, (if applicable).

(vii) Place vehicle in gear after starting the gas flow measuring device, but prior to the first acceleration. Begin the first acceleration 5 seconds after starting the measuring device.

(viii) Operate the vehicle according to the US06 driving schedule, as described in appendix I, paragraph (g), of this part. Manual transmission vehicles shall be shifted according to the manufacturer recommended shift schedule, subject to review and approval by the Administrator. For further guidance on transmissions see § 86.128–00.

(ix) Turn the engine off 2 seconds after the end of the last deceleration (i.e., engine off at 596 seconds).

(x) Five seconds after the engine stops running, simultaneously turn off gas flow measuring device No. 1 (and the petroleum-fueled diesel hydrocarbon integrator No. 1 and mark the petroleum-fueled diesel hydrocarbon recorder chart if applicable) and position the sample selector valves to the ''standby'' position. Record the measured roll or shaft revolutions and the No. 1 gas meter reading or flow measurement instrument.

(xi) As soon as possible, transfer the exhaust and dilution air bag samples to the analytical system and process the samples according to § 86.140–94 obtaining a stabilized reading of the bag exhaust sample on all analyzers within 20 minutes of the end of the sample collection phase of the test.

(xii) Immediately after the end of the sample period, turn off the cooling fan, close the engine compartment cover, disconnect the exhaust tube from the vehicle tailpipe(s), and drive the vehicle from dynamometer.

(xiii) The CVS or CFV may be turned off, if desired.

[61 FR 54894, Oct. 22, 1996, as amended at 70 FR 40434, July 13, 2005; 70 FR 72928, Dec. 8, 2005]

§ 86.160–00 Exhaust emission test procedure for SC03 emissions.

(a) *Overview*. The dynamometer operation consists of a single, 600 second test on the SC03 driving schedule, as described in appendix I, paragraph (h), of this part. The vehicle is preconditioned, in accordance with § 86.132–00 of this subpart, to bring the vehicle to a warmed-up stabilized condition. This preconditioning is followed by a 10 minute vehicle soak (engine off) that proceeds directly into the SC03 driving schedule, during which continuous proportional samples of gaseous emissions are collected for analysis. The entire test, including the preconditioning driving, vehicle soak, and SC03 official test cycle, is either conducted in an environmental test facility or under test conditions that simulates testing in an environmental test cell (see § 86.162–00 (a) for a discussion of simulation procedure approvals). The environmental test facility must be capable of providing the following nominal ambient test conditions of: 95 °F air temperature, 100 grains of water/pound of dry air (approximately 40 percent relative humidity), a solar heat load intensity of 850 W/m^2, and vehicle cooling air flow proportional to vehicle speed. Section 86.161–00 discusses the minimum facility requirements and corresponding control tolerances for air conditioning ambient test conditions. The vehicle's air conditioner is operated or appropriately simulated for the duration of the test procedure (except for the vehicle 10 minute soak), including the preconditioning. For gasoline-fueled Otto-cycle vehicles, the

composite samples collected in bags are analyzed for THC, CO, CO_2, CH_4, and NO_X. For petroleum-fueled diesel-cycle vehicles, THC is sampled and analyzed continuously according to the provisions of § 86.110. Parallel bag samples of dilution air are analyzed for THC, CO, CO_2, CH_4, and NO_X.

(b) *Dynamometer activities.* (1) All official air conditioning tests shall be run on a large single roll electric dynamometer or an equivalent dynamometer configuration that satisfies the requirements of § 86.108–00.

(2) Position (vehicle can be driven) the test vehicle on the dynamometer and restrain.

(3) Required SC03 schedule test dynamometer inertia weight class selections are determined by the test vehicles test weight basis and corresponding equivalent weight as listed in the tabular information of § 86.129–00(a) and discussed in § 86.129–00 (e) and (f).

(4) Set the dynamometer test inertia weight and roadload horsepower requirements for the test vehicle (see § 86.129–00 (e) and (f)). The dynamometer's horsepower adjustment settings shall be set such that the force imposed during dynamometer operation matches actual road load force at all speeds.

(5) The vehicle speed as measured from the dynamometer rolls shall be used. A speed vs. time recording, as evidence of dynamometer test validity, shall be supplied at request of the Administrator.

(6) The drive wheel tires may be inflated up to a gauge pressure of 45 psi (310 kPa), or the manufacturer's recommended pressure if higher than 45 psi, in order to prevent tire damage. The drive wheel tire pressure shall be reported with the test results.

(7) The driving distance, as measured by counting the number of dynamometer roll or shaft revolutions, shall be determined for the test.

(8) Four-wheel drive and all-wheel drive vehicles may be tested either in a four-wheel drive or a two-wheel drive mode of operation. In order to test in the two-wheel drive mode, four-wheel drive and all-wheel drive vehicles may have one set of drive wheels disengaged; four-wheel and all-wheel drive vehicles which can be shifted to a two-wheel mode by the driver may be tested in a two-wheel drive mode of operation.

(c) *Vehicle and test activities for testing in a full environmental cell.* The SFTP air conditioning test in an environmental test cell is composed of the following sequence of activities. Alternative procedures which appropriately simulate full environmental cell testing may be approved under the provisions of §§ 86.162–00(a) and 86.163–00.

(1) Drain and fill the vehicle's fuel tank to 40 percent capacity with test fuel. If a vehicle has gone through the drain and fuel sequence less than 72 hours previously and has remained under laboratory ambient temperature conditions, this drain and fill operation can be omitted (see § 86.132–00(c)(2)(ii)).

(2)(i) Position the variable speed cooling fan in front of the test vehicle with the vehicle's hood down. This air flow should provide representative cooling at the front of the test vehicle (air conditioning condenser and engine) during the SC03 driving schedule. See § 86.161–00(e) for a discussion of cooling fan specifications.

(ii) In the case of vehicles with rear engine compartments (or if this front location provides inadequate engine cooling), an additional cooling fan shall be placed in a position to provide sufficient air to maintain vehicle cooling. The fan capacity shall normally not exceed 5300 cfm (2.50 m^3/s). If, however, it can be demonstrated that during road operation the vehicle receives additional cooling, and that such additional cooling is needed to provide a representative test, the fan capacity may be increased or additional fans used if approved in advance by the Administrator.

(3) Close all vehicle windows.

(4) Connect the emission test sampling system to the vehicle's exhaust tail pipe(s).

(5)(i) Set the environmental test cell ambient test conditions to the conditions defined in § 86.161–00.

(ii) Turn on the solar heating system.

(iii) All vehicle test phases of preconditioning, soak, and the official SC03 test cycle are to be performed in this set of ambient test conditions.

(6) Set the air conditioning system controls as follows:

(i) A/C mode setting at Maximum.

(ii) Airflow setting at Recirculate, if so equipped.

(iii) Fan setting at Highest setting.

(iv) A/C Temperature setting at full cool (for automatic systems set at 72 °F).

(v) Air conditioning controls should be placed in the ''on'' position prior to vehicle starting so that the air conditioning system is active whenever the engine is running.

(7) Start the vehicle (with air conditioning system on) and conduct a preconditioning cycle as discussed in § 86.132–00(o)(1).

(i) If engine stalling should occur during any air conditioning test cycle operation, follow the provisions of § 86.136–90 (Engine starting and restarting).

(ii) For manual transmission vehicles, the vehicle shall be shifted according the provisions of § 86.128–00.

(8) Following the preconditioning cycle, the test vehicle (and consequently the air conditioning system) and cooling fan(s) are turned off and the vehicle is allowed to soak in the ambient conditions of paragraph (c)(5) of this section for 10 ±1 minutes.

(9) Start engine (with air conditioning system also running). Fifteen seconds after the engine starts, place vehicle in gear.

(10) Eighteen seconds after the engine starts, begin the initial vehicle acceleration of the driving schedule.

(11) Operate the vehicle according to the SC03 driving schedule, as described in appendix I, paragraph (h), of this part.

(12) Turn the engine off 2 seconds after the end of the last deceleration (i.e., engine off at 596 seconds).

(d) *Exhaust Emission Measurement Activities*. The following activities are performed, when applicable, in order to meet the timing of the vehicle test and environmental facility activities.

(1) Perform the test bench sampling calibration sequence outlined in § 86.140–94 prior to or in conjunction with each series of exhaust emission measurements.

(2) With the sample selector valves in the ''standby'' position, connect evacuated sample collection bags to the dilute exhaust and dilution air sample collection systems.

(3) Start the CVS (if not already on), the sample pumps, the temperature recorder, the vehicle cooling fan, and the heated THC analysis recorder (diesel-cycle only). The heat exchanger of the constant volume sampler, if used, petroleum-fueled diesel-cycle THC analyzer continuous sample line should be preheated to their respective operating temperatures before the test begins.

(4) Adjust the sample flow rates to the desired flow rate and set the gas flow measuring devices to zero.

(i) For gaseous bag samples (except THC samples), the minimum flow rate is 0.17 cfm (0.08 liters/sec).

(ii) For THC samples, the minimum FID (or HFID in the case of diesel-cycle vehicles) flow rate is 0.066 cfm (0.031 1/sec).

(iii) CFV sample flow rate is fixed by the venturi design.

(5) Attach the exhaust tube to the vehicle tailpipe(s).

(6) Start the gas flow measuring device, position the sample selector valves to direct the sample flow into the exhaust sample bag, the dilution air sample bag, turn on the petroleum-fueled diesel-cycle THC analyzer system integrator, mark the recorder chart, and record both gas meter or flow measurement instrument readings, if applicable.

(7) Start the engine (with air conditioning system also running). Fifteen seconds after the engine starts, place vehicle in gear.

(8) Twenty seconds after the engine starts, begin the initial vehicle acceleration of the driving schedule.

(9) Operate the vehicle according to the SC03 driving schedule.

(10) Turn the engine off 2 seconds after the end of the last deceleration (i.e., engine off at 596 seconds).

(11) Five seconds after the engine stops running, simultaneously turn off gas flow measuring device No. 1 (and the petroleum-fueled diesel hydrocarbon integrator No. 1 and mark the petroleum-fueled diesel hydrocarbon recorder chart if applicable) and position the sample selector valves to the ''standby'' position. Record the measured roll or shaft revolutions and the

No. 1 gas meter reading or flow measurement instrument).

(12) As soon as possible, transfer the exhaust and dilution air bag samples to the analytical system and process the samples according to § 86.140 obtaining a stabilized reading of the bag exhaust sample on all analyzers within 20 minutes of the end of the sample collection phase of the test.

(13) Immediately after the end of the sample period, turn off the cooling fan, disconnect the exhaust tube from the vehicle tailpipe(s), and drive the vehicle from dynamometer.

(14) The CVS or CFV may be turned off, if desired.

(e) *NO_X humidity correction.* Calculated NO_X exhaust emissions from air conditioning tests conducted in an environmental test cell at a nominal 100 grains of water/pound of dry air are to be corrected for humidity to 100 grains of water/pound of dry air (see the relationship of § 86.164–00(d)).

[61 FR 54895, Oct. 22, 1996, as amended at 70 FR 40434, July 13, 2005; 70 FR 72928, Dec. 8, 2005]

§ 86.161–00 Air conditioning environmental test facility ambient requirements.

The goal of an air conditioning test facility is to simulate the impact of an ambient heat load on the power requirements of the vehicle's air conditioning compressor while operating on a specific driving cycle. The environmental facility control elements that are discussed are ambient air temperature and humidity, minimum test cell size, solar heating, and vehicle frontal air flow.

(a) *Ambient air temperature.* (1) Ambient air temperature is controlled, within the test cell, during all phases of the air conditioning test sequence to 95 ±2 °F on average and 95 ±5 °F as an instantaneous measurement.

(2) Air temperature is recorded continuously at a minimum of 30 second intervals. Records of cell air temperatures and values of average test temperatures are maintained by the manufacturer for all certification related programs.

(b) *Ambient humidity.* (1) Ambient humidity is controlled, within the test cell, during all phases of the air conditioning test sequence to an average of 100 ±5 grains of water/pound of dry air.

(2) Humidity is recorded continuously at a minimum of 30 second intervals. Records of cell humidity and values of average test humidity are maintained by the manufacturer for all certification related programs.

(c) *Minimum test cell size.* (1) The recommended minimum environmental exhaust emission test cell size is width 20 feet, length 40 feet, and height 10 feet.

(2) Test cells with smaller size dimensions may be approved by the Administrator if it can be shown that all of the ambient test condition performance requirements are satisfied.

(d) *Solar heat loading.* (1)(i) Acceptable types of radiant energy emitters that may be used for simulating solar heat load are:

(A) Metal halide;

(B) Quartz halogen with dichroic mirrors; and

(C) Sodium iodide.

(ii) The Administrator will approve other types of radiant energy emitters if the manufacturer can show they satisfy the requirements of this section.

(2) The height of the minimal cell size will dictate the type of radiant energy source that will satisfy the spectral distribution and uniformity definitions of this section.

(3) Radiant energy specifications. (i) Simulated solar radiant energy intensity is determined as an average of the two points measured at:

(A) Centerline of the test vehicle at the base of the windshield.

(B) Centerline of the vehicle at the base of the rear window (truck and van location defined as bottom of vertical window or where an optional window would be located).

(ii) The radiant energy intensity set point is 850 ±45 watts/square meter.

(iii) The definition of an acceptable spectral distribution is contained in the following table:

DEFINITION OF THE SPECTRAL DISTRIBUTION

Band width (nanometers)	Percent of total spectrum	
	Lower limit (percent)	Upper limit (percent)
<320	0	0
320–400	0	7

DEFINITION OF THE SPECTRAL DISTRIBUTION—Continued

Band width (nanometers)	Percent of total spectrum	
	Lower limit (percent)	Upper limit (percent)
400–780	45	55
>780	35	53

NOTE: Filter the UV region between 280 and 320 wave lengths.

(iv) The angle of incidence of radiant energy is defined as 90 degrees from the test cell floor.

(v) The requirements for measuring the uniformity of radiant energy are:

(A) The radiant energy uniformity tolerance is ±15 percent of the radiant energy intensity set point of 850 watts/square meter.

(B) The uniformity of radiant energy intensity is measured at each point of a 0.5 meter grid over the entire footprint of the test vehicle at the elevation of one meter including the footprint edges.

(C) Radiant energy uniformity must be checked at least every 500 hours of emitter usage or every six months depending on which covers the shorter time period; and every time major changes in the solar simulation hardware occur.

(vi) The radiant energy intensity measurement instrument specifications (minimum) are:

(A) Sensitivity of 9 microvolts per watt/square meter;

(B) Response time of 1 second;

(C) Linearity of ±0.5 percent; and

(D) Cosine of ±1 percent from normalization 0–70 degree zenith angle.

(e) *Vehicle frontal air flow.* The Administrator will approve frontal air flow based on ''blower in box'' technology as an acceptable simulation of environmental air flow cooling for the air conditioning compressor and engine, provided the following requirements are satisfied.

(1) The minimum air flow nozzle discharge area must be equal or exceed the vehicle frontal inlet area. Optimum discharge area is 18 square feet (4.25×4.25), however, other sizes can be used.

(2) Air flow volumes must be proportional to vehicle speed. With the above optimum discharge size, the fan volume would vary from 0 cubic feet/minute (cfm) at 0 mph to approximately 95,000 cfm at 60 mph. If this fan is also the only source of cell air circulation or if fan operational mechanics make the 0 mph air flow requirement impractical, air flow of 2 mph or less will be allowed at 0 mph vehicle speed.

(3) The fan air flow velocity vector perpendicular to the axial flow velocity vector shall be less than 10 percent of the mean velocity measured at fan speeds corresponding to vehicle speeds of 20 and 40 mph.

(4)(i) Fan axial air flow velocity is measured two feet from nozzle outlet at each point of a one foot grid over the entire discharge area.

(ii) The uniformity of axial flow tolerance is 20 percent of the fan speeds corresponding to vehicle speeds of 20 and 40 mph.

(5) The instrument used to verify the air velocity must have an accuracy of 2 percent of the measured air flow speed.

(6) The fan discharge nozzle must be located 2 to 3 feet from the vehicle and 0 to 6 inches above the test cell floor during air conditioning testing. This applies to non-wind tunnel environmental test cells only.

(7) The design specifications discussed in paragraphs (e)(1) through (e)(5) of this section must be verified by the manufacturer prior to conducting certification air conditioning tests.

[61 FR 54897, Oct. 22, 1996, as amended at 70 FR 40434, July 13, 2005]

§ 86.162–00 Approval of alternative air conditioning test simulations and descriptions of AC1 and AC2.

The alternative air conditioning test procedures AC1 and AC2 are approved by the Administrator for all light-duty vehicles and light-duty trucks only for the model years of 2000, 2001, and 2002. To obtain Administrator approval of other simulation test procedures a manufacturer must satisfy the requirements of paragraph (a) of this section and meet the requirements of § 86.163–00. Air conditioning tests AC1 and AC2 are simulations of the environmental test cell air conditioning test discussed in § 86.160–00. AC1 simulates, in standard test cell ambient conditions and

with the air conditioning off, the exhaust emission results of air conditioning operation in an environmental test cell by adding additional power requirements to roadload dynamometer requirements. AC2 simulates, in standard test cell ambient conditions and with the air conditioning controls in the heat position, the exhaust emission results of air conditioning operation in an environmental test cell by adding a heat load to the passenger compartment. The only differences between the test activities described in § 86.160–00 and those for AC1 and AC2 occur as the result of how the effect of the environmental cell ambient test conditions, defined in § 86.160–00(c)(5)(i), are simulated in a standard test cell nominal ambient conditions of 76 °F and 50 grains of water/pound of dry air. Paragraph (a) of this section discusses the procedure by which a manufacturer can obtain Administrator approval of other air conditioning test simulation procedures. Paragraph (b) of this section describes the AC1 test procedure and paragraph (c) of this section describes the AC2 test procedure.

(a) Upon petition from a manufacturer or upon the Agency's own initiative, the Administrator will approve a simulation of the environmental cell for air conditioning test (SC03) described in § 86.160–00 providing that the procedure can be run by the Administrator for SEA and in-use enforcement testing and providing that the criteria of paragraphs (a)(1)(2), and (3) of this section are satisfied.

(1) In deciding whether approvals will be granted, the Administrator may consider data showing how well the simulation matches environmental cell test data for the range of vehicles to be covered by the simulation including items such as the tailpipe emissions, air conditioning compressor load, and fuel economy.

(2) The Administrator has approved test procedures AC1 and AC2 for only the model years of 2000, 2001, and 2002.

(3) Excluding the AC1 and AC2 procedures described in paragraphs (b) and (c) of this section for model years 2000, 2001, and 2002, for any simulation approved under paragraph (a) of this section, the manufacturer must agree to be subject to an ongoing yearly correlation spot check as described in § 86.163–00.

(4) Once a simulation is approved and used by a manufacturer for testing for a given vehicle, EPA agrees to use the simulation test procedure for all official testing conducted on that vehicle by the Agency for certification, SEA, and recall purposes, excluding spot check testing and vehicles which fail the spot check criteria as described in § 86.163–00.

(5) EPA will moniter the aggregate results of spot check testing and full environmental test cells. If EPA determines, based on such aggregate results, that any simulation (other than the AC1 and AC2 procedures described in paragraphs (b) and (c) of this section for the 2000, 2001, and 2002 model years) is producing test results consistantly below those from a full environmental test cell, EPA may review its approval of the simulation.

(b) *AC1 test procedure.* (1) Section 86.160–00(a) is applicable to the AC1 test procedure except for the discussion of the environmental test requirements. The AC1 test procedure simulates the effect of air conditioning operation in the environmental cell test conditions by adding the measured horsepower of the air conditioning system compressor, converted to an equivalent roadload component, to the normal dynamometer roadload horsepower.

(2) Section 86.160–00(b) is applicable to the AC1 test procedure except that the dynamometer horsepower settings procedure of § 86.160–00(b)(4) is expanded to include a horsepower increase adjustment.

(i) The following describes one acceptable method of obtaining the required compressor horsepower and the corresponding roadload equivalent horsepower adjustment. Air compressor horsepower is measured during a SC03 air conditioning test cycle while operating in an environmental test cell as described in § 86.160–00.

(A) Install an air conditioning (A/C) compressor with a strain-gauged input shaft that measures shaft torque in foot pounds. Other measurement techniques that produce data that can be shown will estimate A/C compressor horsepower are also acceptable.

(B) Obtain the engine crankshaft to A/C compressor pulley diameter (D) ratio (ACPR) as:

ACPR=D(crankshaft pulley)/D(A/C pulley)

(C) Record the following parameters, as a function of accumulated time (t), at least once per second from second 0 to second 600 while driving the SC03 cycle with the air conditioning system operating.

(*1*) Engine revolutions/minute ($ERPM_t$).

(*2*) Compressor input torque in foot pounds (CT_t).

(D) For each second of data recorded from paragraph (b)(2)(i)(C) of this section, calculate compressor horsepower (CHP_t) as:

$CHP_t=(CT_t)(ERPM_t)(ACPR)/5252$

(E) For each second of accumulated time and the data of paragraph (b)(2)(i)(B) and (D) of this section, determine a value of air conditioning compressor roadload force ($ACRF_t$) that is equivalent to the air conditioning compressor force on the engine as:

$ACRF_t=(CHP_t)(375)/V_t$.

where:

V_t equals vehicle SC03 cycle speed in miles per hour for each accumulated second of time, and 375 is a units constant to convert ($ACRF_t$) to foot pounds of force.

(F) Values of ($ACRF_t$) at each second of time are added to the corresponding roadload dynamometer force requirements of § 86.129–00(e) to obtain an approximation of the force generated by the vehicle engine during a SC03 test in an environmental test cell.

(ii) The method by which the values of ($ACRF_t$) additional dynamometer load is applied by the dynamometer to the vehicle tire surface will vary with dynamometer design and its force simulation capabilities. If the dynamometer has grade simulation capabilities, increasing load by simulating varying grades is one acceptable method of applying ($ACRF_t$) values.

(iii) For those calculated values of ($ACRF_t$) which exceed the force capacity of the dynamometer being used for simulation test, replace the calculated values with the maximum road force capacity of the dynamometer. The Administrator would normally not expect ($ACRF_t$) values to exceed dynamometer capability for time periods of more than a second.

(iv) Values of ($ACRF_t$) for application to AC1 testing should be an average of at least two runs unless the manufacturer can demonstrate to the Administrator that one run repeatability is acceptable.

(v) Values of ($ACRF_t$) for application to AC1 testing are to be obtained for each vehicle and engine family combination. If only one vehicle configuration is selected to represent an engine family, the selected configuration is the vehicle expected to produce the highest air conditioning load requirements. A manufacturer may petition the Administrator to reduce the number of ($ACRF_t$) test vehicles for their product line, if they can show that the highest air conditioning loads are covered with a lesser number than one per family.

(vi) Test results, calculations, and dynamometer setting values associated with making these roadload determinations are to be retained by the manufacturer as part of their certification records.

(3) Perform the SC03 air conditioning test sequence as described in § 86.160–00(c) with the following exceptions:

(i) The variable speed cooling fan of § 86.160–00(c)(2)(ii) is replaced with the fixed speed cooling fan requirements of § 86.159–00(b).

(ii) The position of vehicle windows is optional.

(iii) The nominal ambient air test conditions of § 86.160–00(b)(5)(i) (A) and (B) are replaced with 76 °F and 50 grains of water/pound of dry air and the solar heat load of § 86.160–00(b)(5)(i)(C) is omitted.

(iv) The air conditioning system is not operated during the SC03 test cycle. Operation of the air conditioning during preconditioning test cycles is optional.

(4) Section 86.160–00(d) is applicable to the AC1 test procedure.

(5) *NO_X humidity correction*. Calculated NO_X exhaust emissions from air conditioning tests conducted in a standard test cell at a nominal 50 grains of water/pound of dry air are corrected for humidity to 75 grains of water/pound of dry air (see the relationship of § 86.144–94(c)(7)(iv)(B)).

(c) *AC2 test procedure.* (1) section 86.160–00(a) is applicable the AC2 test procedure except for the discussion of the environmental test requirements. The AC2 test procedure simulates the effect of air conditioning operation in the environmental cell test conditions by adding heat from the vehicle's heating system to the interior of the passenger compartment.

(2) Section 86.160–00(b) is applicable to the AC2 test procedure.

(3) Section 86.160–00(c) is applicable except for the following:

(i) Section 86.160–00(c)(3) is applicable except the drivers side front window is left open and all the others are closed.

(ii) The nominal ambient air test conditions of § 86.160–00(b)(5)(i) (A) and (B) are replaced with 76 °F and 50 grains of water/pound of dry air and the solar heat load of § 86.160–00(b)(5)(i)(C) is omitted.

(iii) The control position instruction of § 86.160–00(c)(6)(iv) is replaced with set the A/C temperature control to the highest warm position (maximum for automatic systems).

(4) Section 86.160–00(d) is applicable to the AC2 test procedure.

(5) *NO_x humidity correction.* Calculated NO_X exhaust emissions from air conditioning tests conducted in a standard test cell at a nominal 50 grains of water/pound of dry air are corrected for humidity to 75 grains of water/pound of dry air (see the relationship of § 86.144–94(c)(7)(iv)(B)).

[61 FR 54898, Oct. 22, 1996]

§ 86.162–03 Approval of alternative air conditioning test simulations.

(a) Upon petition from a manufacturer or upon the Agency's own initiative, the Administrator will approve a simulation of the environmental cell for air conditioning test (SC03) described in § 86.160–00 providing that the procedure can be run by the Administrator for SEA and in-use enforcement testing and providing that the following criteria are met:

(1) In deciding whether approvals will be granted, the Administrator will consider data showing how well the simulation matches environmental cell test data for the range of vehicles to be covered by the simulation including items such as the tailpipe emissions, air conditioning compressor load, and fuel economy.

(2) For any simulation approved under paragraph (a) of this section, the manufacturer must agree to be subject to an ongoing yearly correlation spot check as described in § 86.163–00.

(3) Once a simulation is approved and used by a manufacturer for testing for a given vehicle, EPA agrees to use the simulation test procedure for all official testing conducted on that vehicle by the Agency for certification, SEA, and recall purposes, excluding spot check testing and vehicles which fail the spot check criteria as described in § 86.163–00.

(4) EPA will moniter the aggregate results of spot check testing and full environmental test cells. If EPA determines, based on such aggregate results, that any simulation is producing test results consistantly below those from a full environmental test cell, EPA may review its approval of the simulation.

(b) [Reserved]

[61 FR 54899, Oct. 22, 1996]

§ 86.163–00 Spot check correlation procedures for vehicles tested using a simulation of the environmental test cell for air conditioning emission testing.

This section is applicable for vehicles which are tested using a simulation of the environmental test cell approved under the provisions of § 86.162–00(a).

(a) The Administrator may select up to five emission data vehicles (one emission data vehicle for small volume manufacturers), including vehicles submitted for running change approval, each model year for any manufacturer undergoing the spot checking procedures of this section.

(b) Testing conducted under this section (including testing performed in an environmental test cell) will be considered as official data as described in § 86.091–29 and used in determining compliance with the standards. Such testing must comply with all applicable emission standards of subpart A of this part. Retests for the purpose of emission compliance will be allowed using the procedures described in § 86.091–29.

(c) *Spot check procedures.* (1) Subject to the limitations of paragraphs (a) and

(d)(2)(iii) of this section, the Administrator may require that one or more of the test vehicles which use a simulation rather than actual testing in an environmental test cell for air conditioning emission testing be submitted at a place the Administrator will designate for air conditioning emission testing in an environmental test cell as described in § 86.160–00. The Administrator may order this testing to be conducted at a manufacturer facility. All manufacturers which use a simulation instead of environmental cell testing must have access to an environment test cell meeting the requirements of § 86.161–00 to perform this testing.

(2) An air conditioning emission test will be performed as described in § 86.162–00 in a full environmental test cell.

(i) The results of the original simulation test and the full environmental test cell required in paragraph (c)(1) of this section are compared. In order to pass the spot check, the test results must pass both the following two criteria:

(A) The NO_X emission results of the simulation test must be at least 85% of the NO_X emission results of the environmental chamber test.

(B) The fuel consumption of the simulation test must be at least 95% of the fuel consumption of the environmental chamber test.

(ii) If either of two criteria of paragraph (c)(2)(i) of this section were not met, a retest is allowed. The manufacturer may elect to conduct either a retest of the simulation procedure or the environmental chamber testing. In order to pass the spot check, the test results must pass both the following two criteria using the retest test result.

(A) The NO_X emission results of the simulation test must be at least 85% of the NO_X emission results of the environmental chamber test.

(B) The fuel consumption of the simulation test must be at least 95% of the fuel consumption of the environmental chamber test.

(iii) If either of the two criteria of paragraph (c)(2)(ii) of this section were not met, a second retest is allowed. The procedure not selected for the first retest must be used for the second retest, yielding two test results for each procedure. In order to pass the spot check, the test results must pass both the following two criteria using the average test result for each procedure:

(A) The NO_X emission results of the simulation test must be at least 85% of the NO_X emission results of the environmental chamber test.

(B) The fuel consumption of the simulation test must be at least 95% of the fuel consumption of the environmental chamber test.

(iv) If the spot check criteria have not passed after any of the initial test, the first retest, or the second retest the spot check is considered failed.

(d) *Consequences of failing a spot check.* (1) If the emission results of the testing using the environmental test chamber passes all the applicable standards, those test results may be used to obtain a certificate of conformity.

(2) The Administrator will allow up to 60 days for the manufacturer to supply additional data addressing the correlation of the simulation with a full environmental test cell.

(i) If that data prove to the satisfaction of the Administrator that the simulation produces results that correlate sufficiently with the environmental test chamber, the Administrator may allow the continued use of the simulation.

(ii) Otherwise, the Administrator will determine that the simulation fails to meet adequate correlation levels with full environmental testing. As a consequence of this finding, all future air conditioning emission testing on the population of vehicles represented by the failing-spot-check test vehicle (which may include past model year configurations) will be conducted using an environment chamber or a different (or corrected) approved simulation procedure.

(iii) For each vehicle that fails a spot check, the Administrator may select up to two additional vehicles to test for the spot check that do not count against the five vehicle limit of paragraph (a) of this section.

(e) EPA will monitor the aggregate results of spot check testing and full

environmental test cells. If EPA determines, based on such aggregate results, that any simulation (other than the AC1 and AC2 procedures described in paragraphs (b) and (c) of this section for the 2000, 2001, and 2002 model years) is producing test results consistently below those from a full environmental test cell, EPA may review its approval of the simulation.

[61 FR 54899, Oct. 22, 1996]

§ 86.164–00 Supplemental Federal Test Procedure calculations.

(a) The provisions of § 86.144–94 (b) and (c) are applicable to this section except that the NO_X humidity correction factor of § 86.144–94(c)(7)(iv) must be modified when adjusting SC03 environmental test cell NO_X results to 100 grains of water (see paragraph (d) of this section). These provisions provide the procedures for calculating mass emission results of each regulated exhaust pollutant for the test schedules of FTP, US06, and SC03.

(b) The provisions of § 86.144–94(a) are applicable to this section. These provisions provide the procedures for determining the weighted mass emissions for the FTP test schedule (Y_{wm}).

(c)(1) When the test vehicle is equipped with air conditioning, the final reported test results for the SFTP composite ($NMHC+NO_X$) and optional composite CO standards shall be computed by the following formulas.

(i) $Y_{WSFTP} = 0.35(Y_{FTP}) + 0.37(Y_{SC03}) + 0.28(Y_{US06})$

Where:

(A) Y_{WSFTP}=Mass emissions per mile for a particular pollutant weighted in terms of the contributions from the FTP, SC03, and US06 schedules. Values of Y_{WSFTP} are obtained for each of the exhaust emissions of NMHC, NO_X. and CO.

(B) Y_{FTP}=Weighted mass emissions per mile (Ywm) based on the measured driving distance of the FTP test schedule.

(C) Y_{SC03}=Calculated mass emissions per mile based on the measured driving distance of the SC03 test schedule.

(D) Y_{US06}=Calculated mass emissions per mile based on the measured driving distance of the US06 test schedule.

(ii) Composite ($NMHC=NO_X$) + $Y_{WSFTP}(NMHC)$ $W_{SFTP}(NO_X)$

Where:

(A) $Y_{WSFTP}(NMHC)$=results of paragraph (c)(1)(i) of this section for NMHC.

(B) $Y_{WSFTP}(NO_X)$=results of paragraph (c)(1)(i) of this section for NO_X.

(2) When the test vehicle is not equipped with air conditioning, the relationship of paragraph (c)(1)(i) of this section is:

(i) $Y_{WSFTP}=0.72(Y_{FTP})+0.28(Y_{US06})$

Where:

(A) Y_{WSFTP}=Mass emissions per mile for a particular pollutant weighted in terms of the contributions from the FTP and US06 schedules. Values of Y_{WSFTP} are obtained for each of the exhaust emissions of NMHC, NO_X. and CO.

(B) Y_{FTP}=Weighted mass emissions per mile (Ywm) based on the measured driving distance of the FTP test schedule.

(C) Y_{US06}=Calculated mass emissions per mile based on the measured driving distance of the US06 test schedule.

(ii) Composite ($NMHC+NO_X$) = $Y_{WSFTP}(NMHC) + Y_{WSFTP}(NO_X)$

Where:

(A) $Y_{WSFTP}(NMHC)$=results of paragraph (c)(2)(i) of this section for NMHC.

(B) $Y_{WSFTP}(NO_X)$=results of paragraph (c)(2)(i) of this section for NO_X.

(d) The NO_X humidity correction factor for adjusting NO_X test results to the environmental test cell air conditioning ambient condition of 100 grains of water/pound of dry air is:

K_H (100)=0.8825/[1–0.0047(H–75)]

Where:

H=measured test humidity in grains of water/pound of dry air.

[61 FR 54900, Oct. 22, 1996, as amended at 70 FR 40434, July 13, 2005]

Subpart C—Emission Regulations for 1994 and Later Model Year Gasoline-Fueled New Light-Duty Vehicles, New Light-Duty Trucks and New Medium-Duty Passenger Vehicles; Cold Temperature Test Procedures

SOURCE: 57 FR 31916, July 17, 1992, unless otherwise noted.

§ 86.201–94 General applicability.

(a) This subpart describes procedures for determining the cold temperature carbon monoxide (CO) emission from 1994 and later model year new gasoline-fueled light-duty vehicles and light-duty trucks.

(b) All of the provisions of this subpart are applicable to testing conducted at a nominal temperature of 20 °F (−7 °C).

(c) The provisions that are specially applicable to testing at temperatures between 25 °F (−4 °C) and 68 °F (20 °C) are specified in § 86.246–94 of this subpart.

§ 86.202–94 Definitions.

The definitions in subpart A of this part apply to this subpart.

§ 86.203–94 Abbreviations.

The abbreviations in subpart A of this part apply to this subpart.

§ 86.204–94 Section numbering; construction.

(a) In the section number, the two digits following the hyphen designate the first model year for which a section is effective. A section remains effective until superseded.

(b) *Example.* Section 86.204–94 applies to the 1994 and subsequent model years until superseded. If a § 86.204–96 is promulgated it would take effect beginning with the 1996 model year; § 86.204–94 would apply to model years 1994 through 1995.

§ 86.205–94 Introduction; structure of this subpart.

(a) This subpart describes the equipment required and the procedures to follow in order to perform gaseous exhaust emission tests on gasoline-fueled light-duty vehicles and light-duty trucks. Subpart A of this part sets forth testing requirements and test intervals necessary to comply with EPA certification procedures.

(b) A section reference without a model year suffix refers to the section applicable for the appropriate model years.

(c) Three topics are addressed in this subpart. Sections 86.206 through 86.215 set forth specifications and equipment requirements; §§ 86.216 through 86.226 discuss calibration methods and frequency; test procedures and data requirements are listed (in approximate order of performance) in §§ 86.227 through 86.245.

§ 86.206–94 Equipment required; overview.

This subpart contains procedures for exhaust emission tests on gasoline-fueled light-duty vehicles and light-duty trucks. Equipment required and specifications are as follows:

(a) *Exhaust emission tests.* Exhaust from gasoline-fueled vehicles is tested for gaseous emissions using the Constant Volume Sampler (CVS) concept (§ 86.209). Equipment necessary and specifications appear in §§ 86.208 through 86.214.

(b) *Fuel, analytical gas, and driving schedule specifications.* Fuel specifications for exhaust emission testing for gasoline-fueled vehicles are specified in § 86.213. Analytical gases are specified in § 86.214. The EPA Urban Dynamometer Driving Schedule (UDDS) for use in gasoline-fueled emission tests is specified in § 86.215 and appendix I to this part.

§ 86.207–94 [Reserved]

§ 86.208–94 Dynamometer.

(a) For testing that is conducted by the Administrator, the dynamometer shall have a single roll with a nominal diameter of 48 inches (1.22 meters), an electrical power absorption unit for simulation of road load power, flywheels or other means for simulating the inertia weight as specified in § 86.229, and a roll or shaft revolution counter or other means for determining distance driven.

(b) For certification testing that is conducted by the manufacturer, a dynamometer with different characteristics may be used provided cold CO emissions are not decreased.

§ 86.209–94 Exhaust gas sampling system; gasoline-fueled vehicles.

The provisions of § 86.109–90 apply to this subpart.

§ 86.210–94 [Reserved]

§ 86.211–94 Exhaust gas analytical system.

The provisions of § 86.111 apply to this subpart, except that the NO_X analyzer is optional.

§ 86.212–94 [Reserved]

§ 86.213–04 Fuel specifications.

Gasoline having the following specifications will be used by the Administrator except that the Administrator will not use gasoline having a sulfur specification higher than 0.0045 weight percent. Gasoline having the specifications set forth in the table in this section, or substantially equivalent specifications approved by the Administrator, may be used by the manufacturer except that the octane specification does not apply. In lieu of using gasoline having these specifications, the manufacturer may, for certification testing, use gasoline having the specifications specified in § 86.113–04 provided the cold CO emissions are not decreased. Documentation showing that cold CO emissions are not decreased must be maintained by the manufacturer and must be made available to the Administrator upon request. The table listing the cold CO fuel specifications described in the text in this section follows:

TABLE—COLD CO FUEL SPECIFICATIONS

Item	ASTM test	Cold CO low octane value or range	Cold CO high octane [1] value or range
(RON+MON)/2, min	D 2699	87.8±.3	92.3±0.5
Sensitivity, min	D 2699	7.5	7.5
Distillation range:.			
IBP, deg.F	D 86	76–96	76–96
10% point, deg.F.	D 86	98–118	105–125
50% point, deg.F.	D 86	179–214	195–225
90% point, deg.F.	D 86	316–346	316–346
EP, max, deg.F	D 86	413	413
Sulfur, wt. %	D 3120	0.0015–0.008	0.0015–0.008
Phosphorous, g/U.S gal, max	D 3231	0.005	0.005
Lead, g/gal, max		0.01	0.01
RVP, psi	D 4953	11.5±.3	11.5±.3
Hydrocarbon composition	D 1319		
Olefins, vol. pct		12.5±5.0	10.0±5.0
Aromatics, vol. pct		26.4±4.0	32.0±4.0
Saturates		Remainder	Remainder.

[1] Gasoline having these specifications may be used for vehicles which are designed for the use of high-octane premium fuel.

[65 FR 6850, Feb. 10, 2000]

§ 86.213–94 Fuel specifications.

Gasoline having the following specifications will be used by the Administrator. Gasoline having the specifications set forth in the table in this section, or substantially equivalent specifications approved by the Administrator, may be used by the manufacturer except that the octane specification does not apply. In lieu of using gasoline having these specifications, the manufacturer may, for certification testing, use gasoline having the specifications specified in § 86.113–90 provided the cold CO emissions are not decreased. Documentation showing that cold CO emissions are not decreased shall be maintained by the manufacturer and shall be made available to the Administrator upon request.

TABLE—COLD CO FUEL SPECIFICATIONS

Item	ASTM test	Cold CO low octane value or range	Cold CO high octane [1] value or range
(RON+MON)/2, min	D2699	87.8±.3	92.3±0.5
Sensitivity, min	D2699	7.5	7.5
Distillation range:			
IBP, °F	D86	76–96	76–96

TABLE—COLD CO FUEL SPECIFICATIONS—Continued

Item	ASTM test	Cold CO low octane value or range	Cold CO high octane [1] value or range
10% point, °F	D86	98–118	105–125
50% point, °F	D86	179–214	195–225
90% point, °F	D86	316–346	316–346
EP, max, °F	D86	413	413
Sulfur, wt. %	D3120	0.035±0.015	0.020±0.015
Phosphorous, g/U.S gal, max	D3231	0.005	0.005
Lead, g/gal, max		0.01	0.01
RVP, psi	D4953	11.5±.3	11.5±.3
Hydrocarbon composition	D1319		
Olefins, vol. pct		12.5±5.0	10.0±5.0
Aromatics, vol. pct		26.4±4.0	32.0±4.0
Saturates		Remainder	Remainder

[1] Gasoline having these specifications may be used for vehicles which are designed for the use of high-octane premium fuel.

§ 86.214–94 Analytical gases.

The provisions of § 86.114–94 apply to this subpart.

§ 86.215–94 EPA urban dynamometer driving schedule.

The provisions of § 86.115–78 apply to this subpart.

§ 86.216–94 Calibrations, frequency and overview.

The provisions of § 86.116–94 apply to this subpart.

§ 86.217–94 [Reserved]

§ 86.218–94 Dynamometer calibration.

The provisions of § 86.118–78 apply to this subpart.

§ 86.219–94 CVS calibration.

The provisions of § 86.119–90 apply to this subpart.

§ 86.220–94 [Reserved]

§ 86.221–94 Hydrocarbon analyzer calibration.

The provisions of § 86.121–90 apply to this subpart.

§ 86.222–94 Carbon monoxide analyzer calibration.

The provisions of § 86.122–78 apply to this subpart.

§ 86.223–94 Oxides of nitrogen analyzer calibration.

The provisions of § 86.123–78 apply to this subpart if NO_X measurements are optionally made.

§ 86.224–94 Carbon dioxide analyzer calibration.

The provisions of § 86.124–78 apply to this subpart.

§ 86.225–94 [Reserved]

§ 86.226–94 Calibration of other equipment.

The provisions of § 86.126 apply to this subpart.

§ 86.227–94 Test procedures; overview.

The provisions of § 86.127–94 (a), (b), and (e) apply to this subpart.

§ 86.228–94 Transmissions.

The provisions of § 86.128–79 apply to this subpart.

§ 86.229–94 Road load force, test weight, and inertia weight class determination.

(a) Flywheels, electrical forces, or other means of simulating test weight as shown in the table in this paragraph shall be used. If the equivalent test weight specified is not available on the dynamometer being used, the next higher equivalent test weight (not to exceed 250 pounds) available shall be used. Light-duty vehicles over 5750 lbs. loaded vehicle weight shall be tested at a 5,500 lb. equivalent test weight.

Loaded vehicle weight (pounds)	Equivalent test weight (pounds)	Inertia weight class (pounds)
Up–1,062	1,000	1,000
1,063–1,187	1,125	1,000
1,188–1,312	1,250	1,250
1,313–1,437	1,375	1,250
1,438–1,562	1,500	1,500

Loaded vehicle weight (pounds)	Equivalent test weight (pounds)	Inertia weight class (pounds)
1,563–1,687	1,625	1,500
1,688–1,812	1,750	1,750
1,813–1,937	1,875	1,750
1,938–2,062	2,000	2,000
2,063–2,187	2,125	2,000
2,188–2,312	2,250	2,250
2,313–2,437	2,375	2,250
2,438–2,562	2,500	2,500
2,563–2,687	2,625	2,500
2,688–2,812	2,750	2,750
2,813–2,937	2,875	2,750
2,938–3,062	3,000	3,000
3,063–3,187	3,125	3,000
3,188–3,312	3,250	3,000
3,313–3,437	3,375	3,500
3,438–3,562	3,500	3,500
3,563–3,687	3,625	3,500
3,688–3,812	3,750	3,500
3,813–3,937	3,875	4,000
3,938–4,125	4,000	4,000
4,126–4,375	4,250	4,000
4,376–4,625	4,500	4,500
4,626–4,875	4,750	4,500
4,876–5,125	5,000	5,000
5,126–5,375	5,250	5,000
5,376–5,750	5,500	5,500
5,751–6,250	6,000	6,000
6,251–6,750	6,500	6,500
6,751–7,250	7,000	7,000
7,251–7,750	7,500	7,500
7,751–8,250	8,000	8,000
8,251–8,750	8,500	8,500
8,751–9,250	9,000	9,000
9,251–9,750	9,500	9,500
9,751–10,000	10,000	10,000

(b) A dynamometer which meets the specifications of § 86.208–94(a) shall be adjusted to simulate the operation of a vehicle on the road at 20 °F (−7 °C). Such adjustment may be based on a determination of the road load force profile at 20 °F (−7 °C). Alternatively, the adjustment may be based on a 10 percent decrease in the target coastdown time that is used for FTP testing.

§ 86.230–94 Test sequence: general requirements.

(a) *Sequence steps.* Figure C94–1 shows the steps encountered as the test vehicle undergoes the procedures subsequently described, to determine conformity with the standards set forth.

Figure C94-1

Cold CO Test Procedure

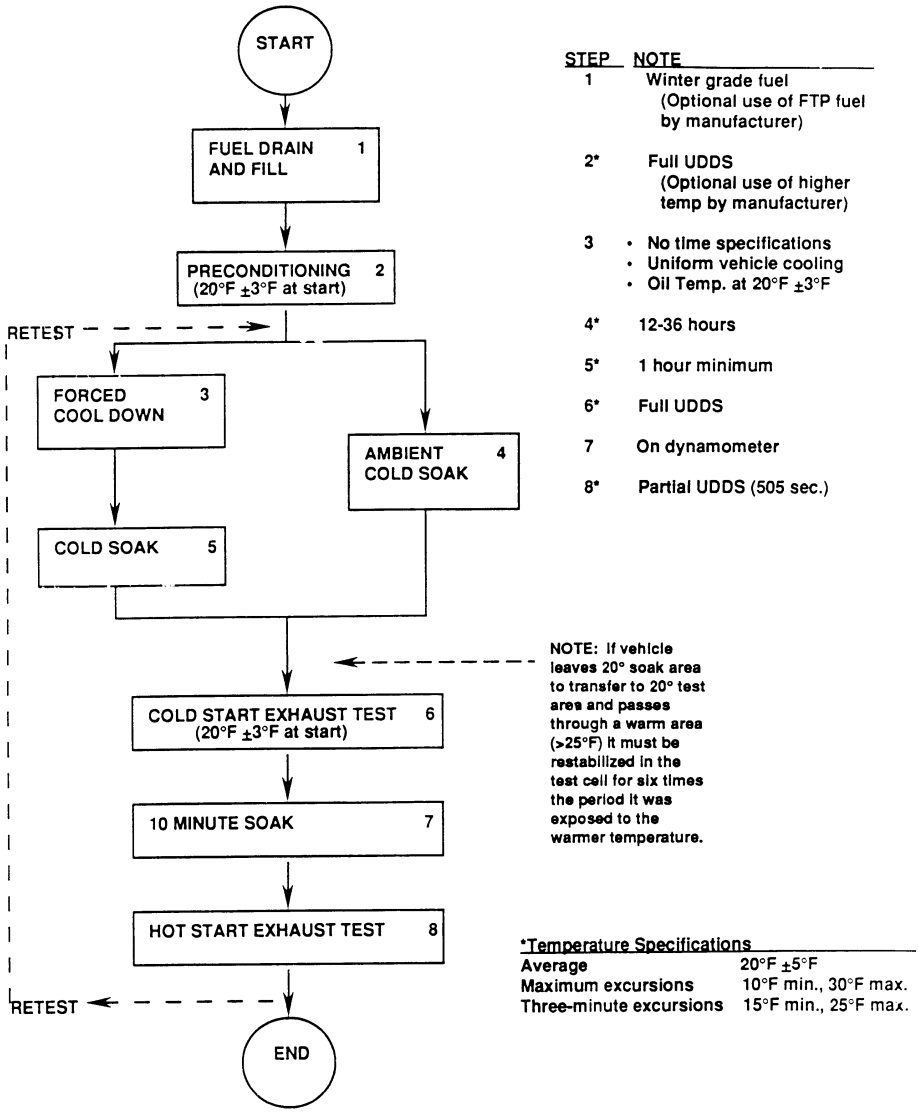

(b) *Driving schedule.* The Urban Dynamometer Driving Schedule (UDDS) test procedure (see § 86.115 and appendix I to this part) is used for vehicle preconditioning and testing.

(c) *Ambient temperature level.* (1) Ambient temperature levels encountered by the test vehicle shall average 20 °F±5 °F (−7 °C±2.8 °C) and shall not be less than 10 °F (−14 °C) nor more than

30 °F (−1 °C) during vehicle preconditioning, except for preconditioning performed in accordance with § 86.232(a)(7), and during all emission testing.

(2) The ambient temperature reported shall be a simple average of the test cell temperatures measured at constant intervals no more than one minute apart. Before the driving cycle may begin, the test cell temperature shall be 20 °F±3 °F (−7 °C±1.7 °C) when measured in accordance with paragraph (e)(2) of this section. The temperature may not exceed 25 °F (−4 °C) or fall below 15 °F (−9 °C) for more than three consecutive minutes during the test.

(d) *Vehicle positioning.* The vehicle shall be approximately level during all phases of the test sequence to prevent abnormal fuel distribution.

(e) *Engine compartment cooling.* (1) Fixed speed air cooling of the engine compartment with the compartment cover open shall be utilized during testing that is conducted by the Administrator and, optionally for certification testing, by the manufacturer. If a separate movable fan is used, it shall be squarely positioned within 12 inches (30.5 centimeters) of the front of vehicles with front engine compartments. In the case of vehicles with rear engine compartments (or if special designs make the normal front engine positioning impractical), the cooling fan shall be placed in a position to provide sufficient air to maintain vehicle cooling. The fan capacity shall normally not exceed 5,300 cfm (2.50 cubic meters per second). If, however, the manufacturer showed (as provided in § 86.135–94(b)) that additional cooling is necessary, the fan capacity may be increased or additional fans used if approved in advance by the Administrator. The cooling air temperature shall be measured at the inlet to the fan.

(2) In lieu of using a separate fan, an air handling system that is integral with the test cell may be used provided comparable air movement is obtained. The cooling air temperature shall be measured in the center of a vertical plane that is located approximately 2 feet in front of the vehicle.

(3) The manufacturer may use, for certification testing, alternative engine compartment cooling fans or systems, including those which provide a variable air flow, if the manufacturer has determined that comparable results are obtained.

(f) *Heater and defroster usage.* The heater and defroster may be used at any temperature and fan settings.

§ 86.231–94 Vehicle preparation.

The provisions of § 86.131–90 apply to this subpart.

§ 86.232–94 Vehicle preconditioning.

(a) The vehicle shall be moved to the test area and the following operations performed:

(1) The fuel tank(s) shall be filled to approximately the prescribed ''tank fuel volume'' with the test fuel specified § 86.213. If the existing fuel in the fuel tank(s) does not meet the specifications contained in § 86.213, the existing fuel must be drained prior to the fuel fill. The test fuel shall be at a temperature less than or equal to 60 °F. For the operations in this paragraph (a)(1), the evaporative emission control system shall neither be abnormally purged nor abnormally loaded.

(2) For operation on a 48-inch (1.22 metre) diameter single roll dynamometer, the drive wheel tires shall be inflated to the pressure recommended by the tire manufacturer. For operation on a twin-roll dynamometer, the drive wheel tires may be inflated to a gauge pressure of 40 psi (276 kPa). The drive wheel tire pressures shall be reported with the test results.

(3) The fuel in the vehicle shall be stabilized at 20 F°±10 °F (−7 °C±5.6 °C) prior to the start of the driving cycle except when vehicle peconditioning is performed in accordance with paragraph (a)(7) of this section.

(4) The vehicle shall be placed, either by being driven or pushed, on a dynamometer and operated through one UDDS cycle.

(5) For those unusual circumstances where additional preconditioning is desired by the manufacturer, such preconditioning may be allowed with the advance approval of the Administrator.

(6) The Administrator may also choose to conduct additional preconditioning. The additional preconditioning shall consist of one or more

driving cycles of the UDDS, as described in paragraph (a)(4) of this section.

(7) The manufacturer may, for certification testing, precondition vehicles at temperatures above 20 °F (−7 °C) and with temperature tolerances greater than those specified in § 86.230(a) if the manufacturer has determined that such preconditioning does not decrease CO emissions during the testing specified in § 86.237.

(b) Within five minutes of completion of preconditioning, the vehicle shall be shut off. During this five minute period, the vehicle shall not experience ambient temperatures less than 10 °F (−12 °C) nor more than 30 °F (−1 °C).

(c) One of the following two methods shall be utilized to stabilize the vehicle before the emissions test:

(1) *Storing at cold temperatures.* The vehicle shall be stored for not less than 12 hours nor for more than 36 hours prior to the cold start exhaust test. The ambient temperature (dry bulb) during this period shall be maintained at an average temperature of 20 °F±5 °F (−7 °C±2.8 °C) during each hour of this period and shall not be less than 10 °F (−12 °C) nor more than 30 °F (−1 °C). The ambient temperature reported shall be a simple average of the test cell temperature measured at constant intervals no more than one minute apart. In addition, the temperature may not exceed 25 °F (−4 °C) or fall below 15 °F (−9 °C) for more than three consecutive minutes.

(2) *Force-cooling or warming.* (i) The vehicle shall be stored for no more than 36 hours prior to cooling or warming for the cold start exhaust test. The vehicle shall not be stored at ambient temperatures which exceed 86 °F (30 °C) during this period.

(ii) Vehicle cooling may be accomplished by either force-cooling or force-warming the vehicle to the test temperature. If cooling is augmented by fans, the fans shall be placed in a vertical position for maximum drive train and engine cooling, not primarily oil pan cooling. Fans shall not be placed under the vehicle.

(iii) The ambient temperature need only be stringently controlled after the vehicle has been cooled to 20 °F±3 °F (−7 °C±1.7 °C), as determined by a representative bulk oil temperature. A representative bulk oil temperature is the temperature of the oil measured near the middle of the oil, not at the surface or at the bottom of the oil pan. If two or more diverse locations in the oil are monitored, they must all meet the temperature requirements.

(iv) The vehicle must be stored for at least one hour after it has been cooled to 20 °F±3 °F (−7 °C±1.7 °C) prior to the cold start exhaust test. The ambient temperature (dry bulb) during this period shall average 20 °F±5 °F (−7 °C±2.8 °C) and shall not be less than 10 °F (−12 °C) nor more than 30 °F (−1 °C). In addition, the temperature may not exceed 25 °F (−4 °C) or fall below 15 °F (−9 °C) for more than three consecutive minutes.

(d) If the vehicle is stabilized at 20 °F (−7 °C) in a separate area and is moved through a warm area to the test cell, the vehicle must be restabilized in the test cell for at least six times the period the vehicle is exposed to warmer temperatures. The ambient temperature (dry bulb) during this period shall average 20 °F±5 °F (−7 °C±2.8 °C) and shall not be less than 10 °F (−12 °C) nor more than 30 °F (−1 °C). In addition, the temperature may not exceed 25 °F (−4 °C) or fall below 15 °F (−9 °C) for more than three consecutive minutes. The maximum time for moving a vehicle through a warm area shall be 10 minutes.

§§ 86.233–94—86.234–94 [Reserved]

§ 86.235–94 Dynamometer procedure.

(a) *Overview.* The emission sampling is completed over two test sequences, a ''cold'' start test after a minimum 12-hour and a maximum 36-hour soak according to the provisions of § 86.232 and a ''hot'' start test following the ''cold'' start test by 10 minutes. Engine start-up, operation over the UDDS, and engine shut-down make a complete cold start test. Engine startup and operation over the first 505 seconds of the driving schedule complete the hot start test. The exhaust emissions are diluted with ambient air and a continuously proportional sample is collected for analysis during each phase. The composite samples collected in bags are analyzed for hydrocarbons, carbon

monoxide, carbon dioxide, and, optionally, other pollutants. A parallel sample of the dilution air is similarly analyzed for carbon monoxide and, optionally, hydrocarbons, carbon dioxide, and oxides of nitrogen.

(b) As long as an emission sample is not taken, practice runs over the prescribed driving schedule may be performed at test point for the purpose of finding the minimum throttle action to maintain the proper speed-time relationship or to permit sampling system adjustment.

(c) Humidity should be set low enough to prevent condensation on the dynamometer rolls.

(d) The dynamometer shall be warmed as recommended by the dynamometer manufacturer and using procedures or control methods that assure stability of the residual frictional horsepower.

(e) The time between dynamometer warming and the start of the emission test shall be no longer than 10 minutes if the dynamometer bearings are not independently heated. If the dynamometer bearings are independently heated, the emission test shall begin no longer than 20 minutes after dynamometer warming.

(f) If the dynamometer horsepower must be adjusted manually, it shall be set within one hour prior to the exhaust emission test phase. The test vehicle shall not be used to make the adjustment. Dynamometers using automatic control of preselectable power settings may be set anytime prior to the beginning of the emission test.

(g) The driving distance, as measured by counting the number of dynamometer roll or shaft revolutions, shall be determined for the transient cold start, stabilized cold start, and transient hot start phases of the test.

(h) Four-wheel drive vehicles will be tested in a two-wheel drive mode of operation. Full-time four-wheel drive vehicles will have one set of drive wheels temporarily disengaged by the vehicle manufacturer. Four-wheel drive vehicles which can be manually shifted to a two-wheel drive mode will be tested in the normal on-highway two-wheel drive mode of operation.

§ 86.236–94 Engine starting and restarting.

The provisions of § 86.136 apply to this subpart.

§ 86.237–94 Dynamometer test run, gaseous emissions.

(a) The complete dynamometer test consists of a cold start drive of approximately 7.5 miles (12.1 kilometers) and a hot start drive of approximately 3.6 miles (5.8 kilometers).

(b) If the preconditioned vehicle is not already on the dynamometer, it shall be pushed into position.

(c) The vehicle is allowed to stand on the dynamometer during the ten minute time period between the cold and hot start test. The cold start test is divided into two periods. The first period, representing the cold start ''transient'' phase, terminates at the end of the deceleration which is scheduled to occur at 505 seconds of the driving schedule. The second period, representing the ''stabilized'' phase, consists of the remainder of the driving schedule, including engine shutdown. The hot start test is identical to the first part or transient phase of the cold start test. Therefore, the hot start test terminates after the first period (505 seconds) is run.

(d) The provisions of § 86.137(b) apply to this subpart.

§§ 86.238–94—86.239–94 [Reserved]

§ 86.240–94 Exhaust sample analysis.

The provisions of § 86.140 apply to this subpart.

§ 86.241–94 [Reserved]

§ 86.242–94 Records required.

The provisions of § 86.142–90 apply to this subpart.

§ 86.243–94 [Reserved]

§ 86.244–94 Calculations; exhaust emissions.

The provisions of § 86.144–94 apply to this subpart, except that NO_X measurements are optional. Should NO_X measurements be calculated, note that the humidity correction factor is not valid at colder temperatures.

§ 86.245–94 [Reserved]

§ 86.246–94 Intermediate temperature testing.

(a) This section is applicable to tests which are conducted at an intermediate temperature as defined in § 86.094–2.

(b) For testing during ambient temperatures of less than 50 °F (10 °C), the test procedure is identical to the test procedure that is used for testing at 20 °F (−7 °C) contained in 40 CFR part 86, subpart C.

(c) For testing at temperatures of 50 °F (10 °C) or higher, the FTP shall be used.

Subpart D—Emission Regulations for New Gasoline-Fueled and Diesel-Fueled Heavy-Duty Engines; Gaseous Exhaust Test Procedures

AUTHORITY: Secs. 202, 206, 207, 208, 301(a), Clean Air Act, as amended (42 U.S.C. 1857f–1, 1857f–5, 1857f–5a, 1857f–6, 1857g(a)).

SOURCE: 42 FR 45154, Sept. 8, 1977, unless otherwise noted.

§ 86.301–79 Scope; applicability.

This subpart contains gaseous emission test procedures for gasoline-fueled and Diesel heavy-duty engines. It applies to 1979 and later model years.

§ 86.302–79 Definitions.

The definitions in §§ 86.077–2, 86.078–2, and 86.079–2 apply to this subpart.

§ 86.303–79 Abbreviations.

The abbreviations in § 86.078–3 apply to this subpart.

§ 86.304–79 Section numbering; construction.

(a) The model year of initial applicability is indicated by the section number. The two digits following the hyphen designate the first model year for which a section is effective. A section remains effective until superseded.

Example: Section 86.311–79 applies to the 1979 and subsequent model years until superseded. If a § 86.311–81 is promulgated it would take effect beginning with the 1981 model year; § 86.311–79 would apply to model years 1979 and 1980.

(b) A section reference without a model year suffix refers to the section applicable for the appropriate model year.

(c) Unless indicated, all provisions in this subpart apply to both gasoline-fueled and Diesel heavy-duty engines.

§ 86.305–79 Introduction; structure of subpart.

(a) This subpart describes the equipment required and the procedures to follow in order to perform exhaust emission tests on gasoline-fueled and Diesel heavy-duty engines. Subpart A sets forth the testing requirements and test intervals necessary to comply with EPA certification procedures.

(b) Four topics are addressed in this subpart. Sections 86.306 through 86.318 set forth specifications and equipment requirements; §§ 86.319 through 86.333 discuss calibration methods and frequency; test procedures and data requirements are listed (in approximately chronological order) in §§ 86.334 through 86.343; and calculation formulas are found in §§ 86.344 and 86.345. Alternative procedures and calculations are set forth in §§ 86.346 and 86.347.

§ 86.306–79 Equipment required and specifications; overview.

(a) This subpart contains procedures for both gasoline-fueled and Diesel engine gaseous emission tests. Generally, the equipment required is identical for both types of engines. Equipment required and specifications are found in §§ 86.307 through 86.318.

(b) Some analyzer specifications refer to calibration checks found in §§ 86.320 through 86.332.

§ 86.307–82 Fuel specifications.

(a) *Gasoline.* (1) Gasoline having the following specifications will be used by the Administrator in exhaust emission testing. Gasoline having the following specifications or substantially equivalent specifications approved by the Administrator shall be used by the manufacturer in exhaust testing, except that the lead and octane specifications do not apply.

Item designation	ASTM	Leaded	Unleaded
Octane, research, minimum	D2699	100	96
PB (organic), grams/U.S. gallon		[1] 1.4	0.00–0.05
Distillation Range:			
IBP, °F	D86	75–95	75–95
10 pct point, °F	D86	120–135	120–135
50 pct point, °F	D86	200–230	200–230
90 pct point, °F	D86	300–325	300–325
EP, °F (maximum)	D86	415	415
Sulfur, weight percent, maximum	D1266	0.10	0.10
Phosphorus, grams/U.S. gallon, maximum		0.01	0.005
RVP pounds per square inch	D323	8.0–9.2	8.0–9.2
Hydrocarbon composition:			
Olefins, percent, maximum	D1319	10	10
Aromatics, percent maximum	D1319	35	35
Saturates	D1319	([2])	([2])

[1] Minimum. [2] Remainder.

(2) Gasoline representative of commercial gasoline which will be generally available through retail outlets shall be used in service accumulation. For leaded fuel the minimum lead content shall be equal to the average lead content found in regular leaded gasoline in the fuel survey prescribed by the Administrator. Where the Administrator determines that engines represented by a test engine will be operated using gasoline of different lead content from that prescribed in this paragraph, he may consent in writing to use of a gasoline with a different lead content. The octane rating of the gasoline used shall be no higher than 4.0 research octane numbers above the minimum recommended by the manufacturer and have a minimum sensitivity of 7.5 octane numbers for unleaded fuel and 7.0 octane numbers for leaded fuel, where sensitivity is defined as research octane number minus motor octane number.

(b) *Diesel Fuel.* (1) The diesel fuels employed for testing shall be clean and bright, with pour and cloud points adequate for operability. The diesel fuel may contain nonmetallic additives as follows: Cetane improver, metal deactivator, antioxident, dehazer, antirust pour depressant, dye, and dispersant.

(2) Diesel fuel meeting the following specifications, or substantially equivalent specifications approved by the Administrator, shall be used in exhaust emissions testing. The grade of diesel fuel recommended by the engine manufacturer commercially designated as ''Type 1–D'' or ''Type 2–D'', shall be used.

Item	ASTM test method No.	Type 1–D	Type 2–D
Cetane Number	D613, D86	48–54	42–50
Distillation range:			
IBP, °F		330–390	340–400
10 percent point, °F		370–430	400–460
50 percent point, °F		410–480	470–540
90 percent point, °F		460–520	550–610
EP, °F		500–560	580–660
Gravity, °AP1	D287	40–44	33–37
Total sulfur, percent	D129 or D2622	0.05–0.02	0.2–0.5
Hydrocarbon composition	D1319		
Aromatics, percent (minimum		[1] 8	[1] 27
Paraffins, naphthenes, olefins		([2])	([2])
Flashpoint, °F (minimum)	D93	120	130
Viscosity, centistokes	D445	1.6–2.0	2.0–3.2

[1] Minimum.
[2] Remainder.

(3) Diesel fuel meeting the following specifications, or substantially equivalent specifications approved by the Administrator, shall be used in service accumulation. The grade of diesel fuel recommended by the engine manufacturer, commercially designated as

''Type 1–D'' or ''Type 2–D'', shall be used.

Item	ASTM test method No.	Type 1–D	Type 2–D
Cetane (minimum)	D613	42–56	38–58
Distillation range 90 pct point, °F	D86	440–530	540–630
Gravity, °AP1	D287	39–45	30–42
Total sulfur, percent	D129 or D2622	0.05	0.2
Flashpoint, °F (minimum)	D96	120	130
Viscosity, centistokes	D445	1.2–2.2	1.5–4.5

[1] Minimum.

(4) Other petroleum distillate fuels may be used for testing and service accumulation provided:

(i) They are commercially available;

(ii) Information, acceptable to the Administrator, is provided to show that only the designated fuel would be used in customer service;

(iii) Use of a fuel listed under paragraphs (b) (2) and (3) of this section would have a detrimental effect on emissions or durability; and

(iv) Written approval from the Administrator of the fuel specifications was provided prior to the start of testing.

(5) The specification range of the fuels to be used under paragraphs (b) (2), (3), and (4) of this section shall be reported in accordance with § 86.082–21(b)(3).

(c) Fuels not meeting the specifications set forth in this section may be used only with the advance approval of the Administrator.

[46 FR 50494, Oct. 13, 1981, and 47 FR 49807, Nov. 2, 1982]

§ 86.308–79 Gas specifications.

(a) *Analyzer gases.* (1) Calibration gases for the CO and CO_2 analyzers shall have zero grade nitrogen as a diluent. Combined CO and CO_2 span gases are permitted. Zero grade nitrogen shall be the diluent for CO and CO_2 span gases.

(2) Calibration or span gases for the hydrocarbon analyzer shall be propane with zero-grade nitrogen as a diluent when testing gasoline-fueled engines. For Diesel engine tests the diluent shall be zero-grade air.

(3) Calibration or span gases for the NO_X analyzer shall be NO named as NO_X with a maximum NO_2 concentration of 5 percent of the nominal value. Zero-grade nitrogen shall be the diluent.

(4) Zero-grade gases for hydrocarbon analyzers shall be nitrogen when testing gasoline-fueled engines and air when testing Diesel engines.

(5) Zero-grade gases for the carbon monoxide, carbon dioxide and oxides of nitrogen analyzers shall be either zero-grade air or zero-grade nitrogen.

(6) The allowable zero grade gas (air or nitrogen) impurity concentrations shall not exceed 2 ppmC hydrocarbon, 10 ppm carbon monoxide, 400 ppm carbon dioxide and 1 ppm nitric oxide.

(7) ''Zero-grade air'' includes artificial ''air'' consisting of a blend of nitrogen and oxygen with oxygen concentrations between 18 and 21 mole percent.

(b) *Calibration gas.* Calibration gas values are to be derived from NBS ''Standard Reference Materials'' (SRM's) or other gas standards approved by the Administrator. The uncertainty of the assigned calibration gas values shall not exceed 2.0 percent of the assigned value. The uncertainty is defined as the sum of the precision errors (at the 90 percent confidence level) and the bias errors. Precision and bias errors apply to both the equipment and the derivation procedures.

(c) *Span gas.* Span gas values are to be derived from NBS ''Standard Reference Materials'' (SRM's) or other gas standards approved by the Administrator. The uncertainty of the assigned calibration gas values shall not exceed 3.0 percent of the assigned value. The uncertainty is defined as the sum of the precision errors (at the 90 percent confidence level) and the bias errors. Precision and bias errors apply to both the equipment and the derivation procedures.

(d) *Hydrocarbon analyzer fuel*—(1) *The fuel shall contain 40 ±2 percent hydrogen.* The balance shall be helium. The mixture shall contain less than 2 ppmC hydrocarbon.

(2) *Alternate pure hydrogen fuel.* Some HFID's are designed to operate on pure hydrogen. Generally the HFID fuel is incompatible with good relative hydrocarbon response.

(i) For Diesel engines this fuel is not recommended. However, this fuel may be used if the engine manufacturer demonstrates, on each basic combustion system (i.e., 4 cycle DI, 2 cycle DI, 4 cycle pre-cup, etc.) that an HFID using this fuel produces comparable results to an HFID using 40% H_2/60% He fuel. These data must be submitted to and approved by the Administrator prior to testing. Pure H_2 fuel, that may be allowed for testing, must contain at least 99.0 percent hydrogen and contain less than 2 ppmC hydrocarbon.

(ii) For gasoline-fueled engines, pure hydrogen fuel for the HFID is not allowed.

(e) *Hydrocarbon analyzer burner air.* The concentration of oxygen must be within 1 mole percent of the oxygen concentration of the burner air used in the latest oxygen interference check (%O_2 I). If the difference in oxygen concentration is greater than 1 mole percent, then the oxygen interference must be checked and the analyzer adjusted if necessary, to meet the %O_2 I requirements. The burner air must contain less than 2 ppmC hydrocarbon.

(f) Oxygen interference check gases shall contain propane with 350 ppmC ±75 ppmC hydrocarbon. The concentration value shall be determined to calibration gas tolerances by chromatographic analysis of total hydrocarbons plus impurities or by dynamic blending. Nitrogen shall be the predominant diluent with the balance oxygen. Blends required for gasoline-fueled and Diesel engine testing are as follows:

Applicability	O_2 concentration (percent)	Balance
Diesel	21 (20 to 22)	N_2
Diesel and gasoline	10 (9 to 11)	N_2
Do	5 (4 to 6)	N_2
Gasoline	0 (0 to 1)	N_2

(g) Proportioning and blending devices may be used to obtain required gas concentration.

[42 FR 45154, Sept. 8, 1977, as amended at 46 FR 50495, Oct. 13, 1981; 47 FR 49807, Nov. 2, 1982]

§ 86.309–79 Sampling and analytical system; schematic drawing.

(a) Any variation from the specifications in this subpart including performance specifications and emission detection methods may be used only with prior approval by the Administrator.

(b) *Schematic drawing.* (1) An example of a sampling and analytical system which may be used for testing under this subpart is shown in Figure D79–1. All components or parts of components that are wetted by the sample or corrosive calibration gases shall be either chemically cleaned stainless steel or inert material, e.g. polytetrafluoroethylene resin. The use of ''gauge savers'' or ''protectors'' with nonreactive diaphragms to reduce dead volumes is permitted. The specific detection methods to be used for each exhaust component can be found in § 86.316 for CO. § 86.317 for HC, and § 86.318 for NO_X. Additional components such as instruments, valves, solenoids, pumps, switches, etc. may be employed to provide additional information and coordinate the functions of the component systems.

(2) The following requirements must be incorporated in each system used for testing under this subpart.

(i) All analyzers must obtain the sample to be analyzed from the same sample line.

(ii) The sample transport system from the engine exhaust pipe to the HC analyzer and the NO_X analyzer must be heated as is indicated in Figure D79–1.

(iii) Carbon monoxide and carbon dioxide measurements must be made on a dry basis. Specific requirements for the means of drying the sample can be found in § 86.309 (b)(5) and § 86.311(e).

(iv) All NDIR analyzers must have a pressure gauge immediately downstream of the analyzer. The gauge tap must be within 2 inches of the analyzer exit port. Gauge specifications can be found in § 86.309(b)(3).

(v) All bypass and analyzer flows exiting the analysis system must be measured. Capillary flows such as in HFID and CL analyzers are excluded. For each ND IR analyzer with a flow meter located upstream of the analyzer, an upstream pressure gauge must be used. The gauge tap must be within 2 inches of the analyzer entrance port.

(vi) Calibration or span gases for the NO_X measurement system must pass through the NO_2 to NO converter.

(vii) The temperature of the NO_2 to NO converter must be displayed continuously.

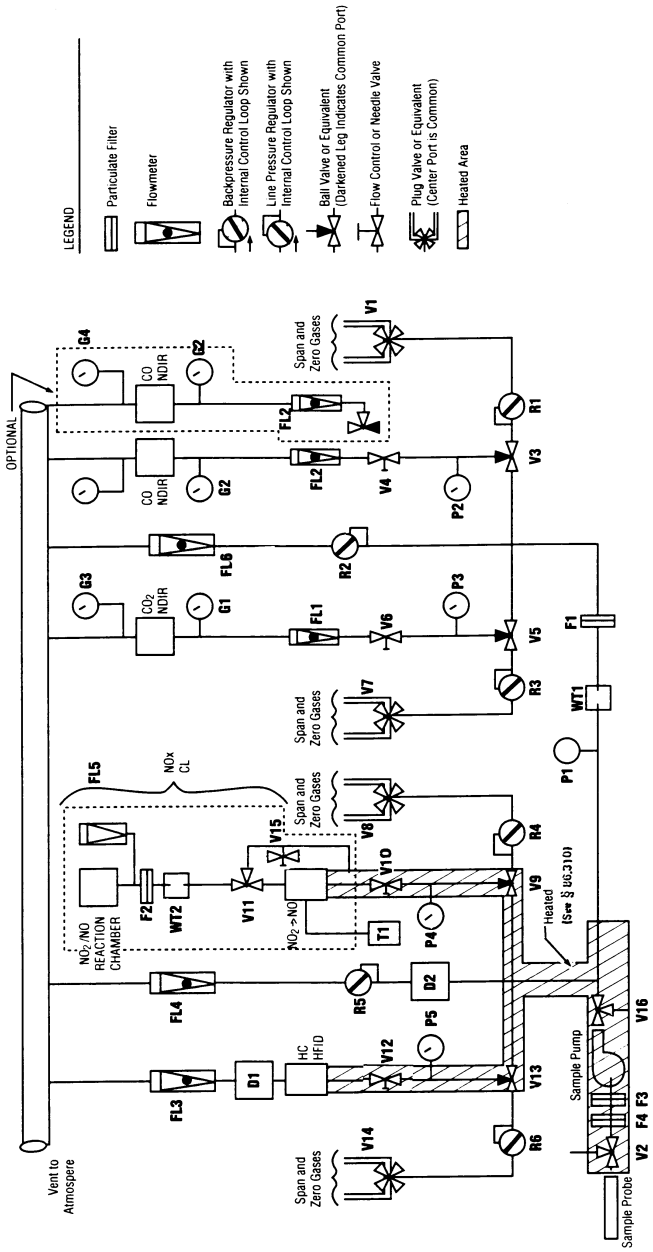

Figure D79-1 HEAVY-DUTY EXHAUST GAS SAMPLING AND ANALYTICAL TRAIN

(c) *System components list.* The following is a list of components shown in Fig. D79–1 by numeric identifier.

(1) *Filters.* Glass fiber filter paper is permitted for F1, F2, and F3. Optional filter F4 is a coarse filter for large particulates.

(i) F1—Fine particulate filter.

(ii) F2—Fine particulate filter.

(iii) F3—Fine heated particulate filter.

(iv) F4—Coarse heated particulate filter.

(2) *Flowmeters*. (i) Flowmeters FL 1 and FL 2 indicate sample flow rates through the CO and CO_2 analyzers.

(ii) Flowmeters FL 3, FL 4, FL 5, and FL 6 indicate bypass flow rates.

(3) *Gauges*. Downstream gauges are required for any system used for testing under this subpart. Upstream gauges may be required under this subpart per § 86.309(b)(2)(v).

(i) Upstream gauges G1 and G2 measure the input to the CO and CO_2 analyzers.

(ii) Downstream gauges G3 and G4 measure the exit pressure of the CO and CO_2 analyzers. If the normal operating range of the downstream gauges is less than 3 inches of water, then the downstream gauges must be capable of reading both pressure and vacuum.

(4) *Pressure gauges*. (i) P1—bypass pressure.

(ii) P2, P3, P4 and P5—sample or span pressure at inlet to flow control valves.

(5) *Water traps*. Water traps WT1, and WT2 to remove water from the sample. A water trap performing the function of WT1 and meeting the specifications in § 86.311(e) is required for any system used for testing under this subpart. Chemical dryers are not an acceptable method of removing the water. Water removal by condensation is acceptable. Means other than condensation may be used only with prior approval from the Administrator.

(6) *Regulators*. (i) R1, R3, R4, and R6—linepressure regulators to control span pressure at inlet to flow control valves.

(ii) R2 and R5—back presssure regulators to control sample pressure at inlet to flow control valves.

(7) *Valves*. (i) V1, V7, V8, and V14—selector valves to select zero or calibration gases.

(ii) V2—optional heated selector valve to purge the sample probe, perform leak checks, or to perform hang-up checks.

(iii) V3 and V5—Selector valves to select sample or span gases.

(iv) V4, V6, and V15—flow control valves.

(v) V9 and V13—heated selector valve to select sample or span gases.

(vi) V10 and V12—heated flow control valves.

(vii) VII—Selector valve to select NO_X or bypass mode in the chemiluminescence analyzer.

(viii) V16—heated selector valve to perform leak checks.

(8) *Pump*. Sample transfer pump to transport sample to analyzers.

(9) *Temperature sensor*. A temperature sensor (T1) to measure the NO_2 to NO converter temperature is required for any system used for testing under this subpart.

(10) *Dryer*. Dryers D1 and D2 to remove the water from the bypass flows to prevent condensation in flowmeters FL3, FL4, and FL6.

§ 86.310–79 Sampling and analytical system; component specifications.

(a) *Temperature*. (1) For gasoline-fueled engines any heated component;

(i) In the HC sample path must be maintained above 110 °C (230 °F) and shall not exceed 230 °C (446 °F).

(ii) In the NO_X sample path must be maintained above 60 °C (140 °F) and shall not exceed 230 °C (446 °F).

(2) *For Diesel engines any heated component;*

(i) In the HC sample path must be maintained above 180 °C (356 °F) and shall not exceed 230 °C (446 °F).

(ii) In the NO_X sample path must be maintained above 60 °C (140 °F) and shall not exceed 230 °C (446 °F).

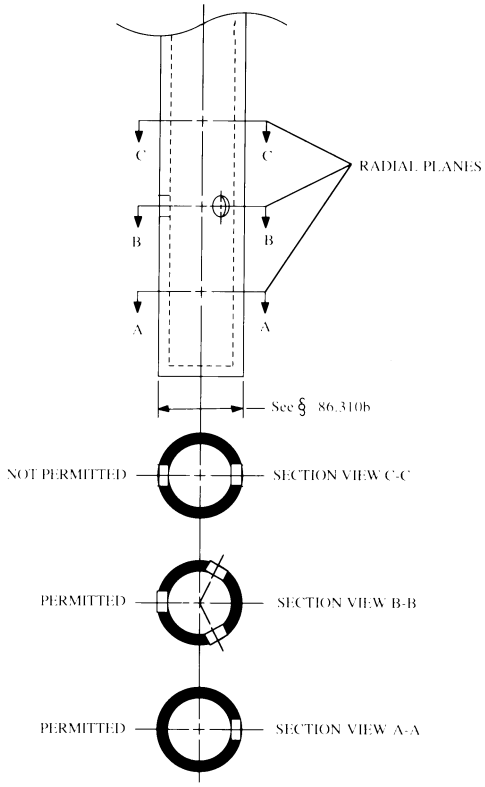

Figure D79-2 SAMPLE PROBE AND TYPICAL HOLE SPACINGS

(3) The sample line outside wall temperature must be maintained at the temperature specified in this paragraph. An exception is made for the first 4 feet of sample line from the exhaust duct. The upper temperature tolerance for this 4 foot section is waived and only the minimum temperature specification applies.

(b) *Sample probe.* (1) The sample probe shall be a straight, closed end, stainless steel, multi-hole probe. The Inside Diameter (I.D.) shall not be greater than the I.D. of the sample line (=.010 in.). The wall thickness of the probe shall not be greater than .040 inch. The fitting that attaches the probe to the exhaust pipe shall be as small as practical in order to minimize heat loss from the probe.

(2) There shall be a minimum of three holes in the probe. The spacing of the radial planes for each hole in the probe must be such that they cover approximately equal cross-sectional areas of the exhaust duct. The angular spacing of the holes must be approximately equal. The angular spacing of any two holes in one plane may not be 180° ±20° (i.e., section C-C of Figure D79–2). The holes should be sized such that each has approximately the same flow. If only three holes are used, they may not all be in the same radial plane. See Figure D79–2.

(3) The probe shall extend radially across the exhaust duct. The probe must pass through the approximate center and must extend across at least 80 percent of the diameter of the duct.

(c) *Sample transfer.* (1) The maximum I.D. of the sample line shall not exceed 0.52 inch.

(2) If valve V2 is used, the sample probe must connect directly to valve V2. The location of optional valve V2 may not be greater than 4 feet from the exhaust duct.

(3) The location of optional valve V16 may not be greater than 24 inches from the sample pump. The leakage rate for this section on the pressure side of the sample pump may not exceed the leakage rate specification for the vacuum side of the pump.

(d) *Venting*. All vents including analyzer vents, bypass flow, and pressure relief vents of regulators should be vented in such a manner to avoid endangering personnel in the immediate area.

[42 FR 45154, Sept. 8, 1977, as amended at 46 FR 50495, Oct. 13, 1981, and 47 FR 49807, Nov. 2, 1982]

§ 86.311–79 Miscellaneous equipment; specifications.

(a) *Chart recorders*. (1) The minimum chart speed allowed is 3 inches per minute for gasoline-fueled engines and 0.5 inches per minute for Diesel engines.

(2) When testing gasoline-fueled engines all chart recorders (analyzers, torque, rpm, etc.) shall be provided with Automatic markers which indicate one second intervals. Preprinted chart paper (one second intervals) may be used in lieu of the automatic markers provided the correct chart speed is used.

(b) *Accuracy of temperature measurements*. (1) The following temperature measurements shall be accurate to within 1.2 °C:

(i) Temperature measurements used in calculating the engine intake humidity:

(ii) The temperature of the fuel in volume measuring flow rate devices;

(iii) The temperature of the sample within the water trap(s).

(2) All other temperature measurements shall be accurate within 2.5 °C.

(c) *Intake air humidity and temperature measurements*. (1) Humidity conditioned air supply. Air that has had its absolute humidity altered is considered humidity-conditioned air. For this type of intake air supply, the humidity measurements must be made within the intake air supply system, and after the humidity conditioning has taken place.

(2) *Nonconditioned air supply*. Humidity measurements in non-conditioned intake air supply systems must be made in the intake air stream entering the supply system. Alternatively, the humidity measurements can be measured within the intake air supply stream.

(3) Engine intake air temperature measurement must be made within 48 inches of the engine. The measurement location must be made either in the supply system or in the air stream entering the supply system.

(d) *Sample component surface temperature*. For each component (pump, sample line section, filters, etc.) in the heated portion of the sampling system that has a separate source of power or heating element, use engineering judgment to locate the coolest portion of that component and monitor the temperature at that location. If several components are within an oven, then only the surface temperature of the component with the largest thermal mass and the oven temperature need be measured.

(e) If water is removed by condensation, the sample gas temperature or sample dew point must be monitored either within the water trap or downstream. It may not exceed 7 °C (45 °F).

[42 FR 45154, Sept. 8, 1977, as amended at 46 FR 50495, Oct. 13, 1981; 47 FR 49807, Nov. 2, 1982]

§ 86.312–79 Dynamometer and engine equipment specifications.

(a) *Dynamometer*. (1) The dynamometer test stand and other instruments for measurement of power output shall be accurate to within 2 percent of point at all power settings above 10 percent of full-scale. Below 10 percent of full-scale the accuracy shall be within 5 percent of point. The dynamometer must be capable of performing the test cycle described in § 86,335 or § 86.336. Dynamometers used for testing gasoline-fueled engines must have sufficient motoring capability to meet the test requirements. A 60-tooth wheel in combination with a frequency counter shall be considered an absolute standard for engine speed.

(2) *Dynamometer calibration weights.* A minimum of 6 calibration weights for each range used are required. The weights must be equally spaced and traceable to within 0.5 percent of NBS weights. Laboratories located in foreign countries may certify calibration weights to local government bureau standards.

(b) *Engine cooling.* Means of engine cooling which will maintain the engine operating temperatures (e.g., intake air, oil, water, etc.) at approximately the same temperature as specified by the manufacturer shall be used. Auxiliary fan(s) may be used to maintain engine cooling during operation on the dynamometer.

(c) *Exhaust system.* (1) When testing gasoline-fueled engines:

(i) A chassis-type exhaust system including muffler(s) shall be used. The exhaust system must have a single tail pipe. For engines designed for a dual exhaust system, a standard or specially fabricated ''Y'' pipe may be used. The ''Y'' pipe may be located upstream of a single muffler or downstream of a single muffler or downstream of dual mufflers. The potential increase in backpressure due to the use of a single tail pipe instead of dual pipes may be compensated for by using larger than standard exhaust system components downstream of the ''Y'' pipe. For systems with the ''Y'' pipe upstream of the muffler, the backpressure at the exhaust manifold exit with the single exhaust system must be comparable to the standard dual exhaust system under the test conditions specified in § 86.335.

(ii) For all catalyst systems the distance from the exhaust manifold flange(s) to the catalyst shall be the same as in the vehicle configuration unless the manufacturer provides temperature data showing equivalent performance at another location.

(iii) For catalyst systems, the probe shall be located in the single exhaust pipe and from 2 to 10 feet downstream of the catalyst(s) and at least 2 feet downstream of the ''Y'' intersection of any ''Y'' pipe (if used).

(iv) For noncatalyst systems, the probe shall be located in the single exhaust pipe downstream of the muffler(s) and from 3 to 20 feet downstream from the exhaust manifold flange or turbocharger exit flange. The probe shall also be at least 2 feet downstream of the ''Y'' intersection of any ''Y'' pipe (if used).

(v) For all exhaust systems, the probe shall be located at least 24 inches from the end of the tail pipe. Additional exhaust pipe may be added to the tail pipe to meet the specification.

(2) When testing Diesel engines, a noninsulated exhaust system extending 15 ±5 feet from the exhaust manifold, or the crossover junction in the case of Vee engines, shall be used. The exhaust back pressure must be within 0.2 inch Hg. of the upper limit at maximum rated horsepower, as established by the engine manufacturer in his sales and service literature for vehicle application. A conventional automotive muffler of a size and type commonly used with the engine being tested shall be employed in the exhaust system during smoke emission testing. The terminal 2 feet of the exhaust pipe shall be a circular cross section and be free of elbows and bends. The end of the pipe shall be cut off squarely. The terminal 2 feet of the exhaust pipe shall have a nominal inside diameter in accordance with the engine being tested, as specified below:

Maximum rated horsepower	Exhaust pipe inside diameter (inches)
Less than 101	2
101 to 200	3
201 to 300	4
301 or more	5

[42 FR 45154, Sept. 8, 1977, as amended at 43 FR 52922, Nov. 14, 1978]

§ 86.313–79 Air flow measurement specifications; diesel engines.

(a) The air flow measurement method used must have a range large enough to accurately measure the air flow over the engine operating range during the test. Overall measurement accuracy must be ±2 percent of full-scale value of the measurement device for all modes except the idle and 2-percent modes. For the idle and 2-percent modes, the measurement accuracy shall be ±5 percent or less of the full-scale value. The Administrator must be advised of the method used prior to testing.

(b) Corrections to the measured air mass-flow-rate shall be made when an engine system incorporates devices that add or subtract air mass (air injection, bleed air, etc.). The method used to determine the air mass from these devices shall be approved by the Administrator.

(c) An engine air inlet system presenting an air inlet restriction within 1 inch of water of the upper limit for the engine operating condition which results in maximum air flow, as established by the engine manufacturer in his sales and service literature, for the Diesel engine being tested shall be used.

§ 86.314–79 Fuel flow measurement specifications.

(a) The fuel flow rate measurement instrument must have a minimum accuracy of ±1 percent of full-scale flow rate for each measurement range used. An exception for Diesel engines is allowed at the idle and 2-percent power points. For these modes, the minimum accuracy is ±2 percent of full-scale flow rate for each measurement range used. The controlling parameters are the elapsed time measurement of the event and the weight or volume measurement. Restrictions on these parameters are:

(1) The error in the elapsed time measurement of the event must not be greater than 1 percent of the absolute event time. This includes errors in starting and stopping the clock as well as the period of the clock.

(2) For Diesel engines only, if the mass of fuel consumed is measured by discrete weights, then the error in the actual weight of the fuel consumed must not be greater than ±1 percent of the measuring weight. An exception for Diesel engines is allowed at the idle and 2-percent power points. For these modes the error in the actual weight of the fuel consumed must not be greater than ±2 percent of the measuring weight.

(3) If the mass of fuel consumed is measured electronically (load cell, load beam, etc.), the error in the actual weight of fuel consumed must not be greater than ±1 percent of the full-scale value of the electronic device.

(4) If the mass of fuel consumed is measured by volume flow and density, the error in the actual volume consumed must not be greater than ±1 percent of the full-scale value of the volume measuring device.

(b) For the devices that have varying mass scales (electronic weight, volume, density, etc.), measurements may not be used for calculations if the measurement is less than 20 percent of full scale.

(c) *Option*. Complete flow-rate measurement systems may be used below 20 percent of full-scale measurement as long as the combination of mass and time measurements indicate a flow rate that has an error of less than 5 percent of the absolute flow rate.

§ 86.315–79 General analyzer specifications.

(a) *Analyzer response time*. The analyzer must respond to an instantaneous step change at the entrance to the analyzer with a response equal to 95 percent of that step change in 6.0 seconds or less on all ranges used. The step change shall be at least 60 percent of full-scale chart deflection. For NO_X analyzers using a water trap, the response time increase due to the water trap and associated plumbing need not be included in the analyzer response time.

(b) *Precision*. The precision of the analyzer must be no greater than ±1 percent of full-scale concentration for each range used above 155 ppm (or ppm C), or ±2 percent for each range used below 155 ppm (or ppm C). The precision is defined as 2.5 times the standard deviation(s) of 10 repetitive responses to a given calibration or span gas.

(c) *Noise*. The analyzer peak-to-peak response to zero and calibration or span gases over any 10-second period shall not exceed 2 percent of full/scale chart deflection on all ranges used.

(d) *Zero drift*. The analyzer zero-response drift during a 1-hour period shall be less than 2 percent of full-scale chart deflection on the lowest range used. The zero-response is defined as the mean response including noise to a zero-gas during a 30-second time interval.

(e) *Span drift*. The analyzer span drift during a 1-hour period shall be less

than 2 percent of full-scale chart deflection on the lowest range used. The analyzer span is defined as the difference between the span-response and the zero-response. The span-response is defined as the mean response including noise to a span gas during a 30-second time interval.

(Secs. 206, 301(a), Clean Air Act as amended (42 U.S.C. 7525, 7601(a)))

[42 FR 45154, Sept. 8, 1977, as amended at 44 FR 16917, Mar. 20, 1979]

§ 86.316–79 Carbon monoxide and carbon dioxide analyzer specifications.

(a) Carbon monoxide and carbon dioxide measurements are to be made with nondispersive infrared (NDIR) an analyzers.

(b) The use of linearizing circuits is permitted.

(c) The minimum water rejection ratio (maximum CO_2 interference) as measured by § 86.321 shall be:

(1) For CO analyzers, 1000:1.

(2) For CO_2 analyzers, 100:1.

(d) The minimum CO_2 rejection ratio (maximum CO_2 interference) as measured by § 86.322 for CO analyzers shall be 5000:1.

(e) *Zero suppression*. Various techniques of zero suppression may be used to increase readability, but only with prior approval by the Administrator.

§ 86.317–79 Hydrocarbon analyzer specifications.

(a) Hydrocarbon measurements are to be made with a heated flame ionization detector (HFID) analyzer.

(b) *Option*. A non-heated flame ionization detector (FID) that measures hydrocarbon emissions on a dry basis is permitted for gasoline-fueled testing; *Provided*, That equivalency is demonstrated to the Administrator. With the exception of temperatures, all specifications contained in subpart D apply to the optional system.

(c) The analyzer shall be fitted with a constant temperature oven housing the detector and sample-handling components. It shall maintain temperature with 2 °C of the set point. The detector, oven, and sample-handling components within the oven shall be suitable for continuous operation at temperatures to 200 °C.

(d) Fuel and burner air shall conform to the specifications in § 86.308.

(e) The percent of oxygen interference must be less than 3 percent, as specified in § 86.331(d)(7).

(f) Premixed burner air:

(1) For Diesel engines, premixing a small amount of air with the HFID fuel prior to combustion within the HFID burner is not recommended as a means of improving oxygen interference (%O_2 I). However, this procedure may be used if the engine manufacturer demonstrates on each basic combustion system (i.e., 4 cycle DI, 2 cycle DI, 4 cycle precup, etc.) that an HFID using this procedure produces comparable results to an HFID not using this procedure. These data must be submitted to the Administrator for his approval prior to testing.

(2) For gasoline-fueled engines, premixing burner air with the HFID fuel is not allowed.

§ 86.318–79 Oxides of nitrogen analyzer specifications.

(a) Oxides of nitrogen are to be measured with a chemiluminescense analyzer.

(1) The NO_X sample must be heated per § 86.309(a) and § 86.310(a) up to the NO_2 to NO converter.

(2) For high vacuum CL analyzers with heated capillary modules, supplying a heated sample to the capillary module is sufficient.

(3) The NO_2 to NO convertor efficiency shall be at least 90 percent.

(4) The quench interference must be less than 3.0 percent as measured in § 86.327.

(b) *Option*. The oxides of nitrogen may be measured with an NDIR analyzer system that meets the following specifications:

(1) The system shall include an NO_2 to NO converter, a water trap, and an NDIR analyzer in that order.

(2) The NO_2 to NO converter shall obtain a sample directly from the heated sample line.

(3) The water trap shall meet the specifications in § 86.311(e).

(4) The NO NDIR analyzer shall be calibrated per § 86.330.

(5) The minimum water rejection ratio (maximum water interference)

for the NO NDIR analyzer shall be 5,000:1 (see § 86.321).

(6) The minimum CO_2 rejection ratio (maximum CO_2 interference) for the NO NDIR analyzer shall be 30,000:1 (see § 86.322).

§ 86.319–79 Analyzer checks and calibrations; frequency and overview.

(a) Prior to initial use and after major repairs, bench check each analyzer (see § 86.320).

(b) At least monthly during testing, check the NO_X converter efficiency, as described in § 86.332.

(c) At least once every 30 days during testing, perform the following:

(1) Leak check the pressure side of the system (see § 86.328). If the option described in § 86.328(b)(2) is used, a pressure leak check is not required.

(2) Calibrate all analyzers (see §§ 86.330 through 86.332).

(3) Check the analysis system response time (see § 86.329). If the option described in § 86.329(b) is used, a response time check is not required.

(4) Verify that the automatic data collection system (if used) meets the chart reading requirements found in § 86.343.

(5) Check the fuel flow measurement instrument to insure that the specifications in § 86.314 are met. Flow meters of the tapered tube and float design (rotometers) or the balance beam principle need be checked only every 90 days.

(d) At least once every 90 days during testing check the water rejection ratio and the CO_2 rejection ratio on all NDIR analyzers (see §§ 86.321 and 86.322).

(e) At least once every 180 days during testing check the dynamometer test stand and power output instrumentation (see § 86.333).

[42 FR 45154, Sept. 8, 1977, as amended at 58 FR 58422, Nov. 1, 1993]

§ 86.320–79 Analyzer bench check.

(a) Prior to initial use and after major repairs verify that each analyzer complies with the following specifications:

(1) Response time (see § 86.315(a)).

(2) Precision (see § 86.315(b)).

(3) Noise (see § 86.315(c)).

(4) Zero drift (see § 86.315(d)).

(5) Span drift (see § 86.315(e)).

(6) Water rejection ratio, NDIR analyzers only (see §§ 86.316(c) and 86.318 (b)(5).

(7) CO_2 rejection ratio, NDIR analyzers only (see §§ 86.316(d) and 86.318(b)(6)).

(8) Quench check, CL analyzers only (see § 86.327).

(b) If a stainless steel NO_2 to NO converter is used, condition all new or replacement converters. The conditioning consists of either purging the converter with air for a minimum of 4 hours or until the converter efficiency is greater than 90 percent. The converter must be at operational temperature while purging. Do not use this procedure prior to checking converter efficiency on in-use converters.

§ 86.321–79 NDIR water rejection ratio check.

(a) Zero and span the analyzer on the lowest range that will be used.

(b) Introduce a saturated mixture of water and zero gas at room temperature directly to the analyzer.

(c) Determine and record the analyzer operating pressure (*GP*) in absolute units in pascals. Gauges G3 and G4 may be used if the values are converted to the correct units.

(d) Determine and record the temperature of the zero-gas mixture.

(e) Record the analyzers' response (*AR*) in ppm to the saturated zero-gas mixture.

(f) For the temperature recorded in step (d), determine the saturation vapor presssure (P_{WB}) from § 86.344(d).

(g) Calculate the water concentration (*Z*) in the mixture from:

$$Z = (P_{WB}/GP)(10^6)$$

(h) Calculate the water rejection ratio (*WRR*) from:

$$WRR = (Z/AR)$$

§ 86.322–79 NDIR CO_2 rejection ratio check.

(a) Zero and span the analyzer on the lowest range that will be used.

(b) Introduce a CO_2 calibration gas of at least 10 percent CO_2 or greater to the analyzer.

(c) Record the CO_2 calibration gas concentration in *ppm*.

(d) Record the analyzers' response (*AR*) in *ppm* to the CO_2 calibration gas.

(e) Calculate the CO_2 rejection ratio (CO_2RR) from:

$CO_2RR = (ppm\ CO_2)/AR$

§ 86.327–79 Quench checks; NO_X analyzer.

(a) Perform the reaction chamber quench check for each model of high vacuum reaction chamber analyzer prior to initial use.

(b) Perform the reaction chamber quench check for each new analyzer that has an ambient pressure or ''soft vacuum'' reaction chamber prior to initial use. Additionally, perform this check prior to reusing an analyzer of this type any time any repairs could potentially alter any flow rate into the reaction chamber. This includes, but is not limited to, sample capillary, ozone capillary, and if used, dilution capillary.

(c) Quench check as follows:

(1) Calibrate the NO_X analyzer on the lowest range that will be used for testing.

(2) Introduce a mixture of CO_2 calibration gas and NO_X calibration gas to the CL analyzer. Dynamic blending may be used to provide this mixture. Dynamic blending may be accomplished by analyzing the CO_2 in the mixture. The change in the CO_2 value due to blending may then be used to determine the true concentration of the NO_X in the mixture. The CO_2 concentration of the mixture shall be approximately equal to the highest concentration experienced during testing. Record the response.

(3) *Recheck the calibration.* If it has changed more than ±1 percent of full scale, recalibrate and repeat the quench check.

(4) Prior to testing, the difference between the calculated NO_X response and the response of NO_X in the presence of CO_2 (step 2) must not be greater than 3.0 percent of full-scale. The calculated NO_X response is based on the calibration performed in step (1).

(Secs. 206, 301(a), Clean Air Act as amended (42 U.S.C. 7525, 7601(a)))

[42 FR 45154, Sept. 8, 1977, as amended at 44 FR 16917, Mar. 20, 1979]

§ 86.328–79 Leak checks.

(a) *Vacuum side leak check.* (1) Any location within the analysis system where a vacuum leak could affect the test results must be checked.

(2) The maximum allowable leakage rate on the vacuum side is 0.5 percent of the in-use flow rate for the portion of the system being checked. the analyzer flows and bypass flows may be used to estimate the in-use flow rates.

(3) The sample probe and the connection between the sample probe and valve V2 (Figure D79–1) may be excluded from the leak check.

(b) *Pressure side leak check.* (1) The maximum allowable leakage rate on the pressure side in 5 percent of the in-use flow rate.

(2) Option: If the flow rate for each flow meter is equal to or greater than the flow rate recorded in § 86.329(b)(1)(ii), then a pressure side leak check is not required.

§ 86.329–79 System response time; check procedure.

(a) Check the system response time by the following procedure:

(1) Stabilize the operating temperature of the sample line, sample pump, and heated filters.

(2) Introduce an HC span gas into the sampling system at the sample probe or valve V2 at atmospheric pressure. Simultaneously, start the time measurement.

(3) When the HC instrument response is 95 percent of the span gas concentration used, stop the time measurement.

(4) If the elapsed time is more than 20.0 seconds, make necessary adjustments.

(5) Repeat with the CO, CO_2, and NO_X instruments and span gases.

(b) *Option.* If the following parameters are determined, the initial system response time may be generally applied to future checks.

(1) *Analyzer and bypass flow rates.* (i) Determine by experimentation the minimum analyzer and bypass flow rates individually and in combination that will produce a response time as close as possible to 20.0 seconds per paragraph (a) of this section.

(ii) Record the highest minimum flow rate for each flow meter as determined in step (i).

(2) *Capillary flow analyzers*. This procedure is applicable only to analyzers that have sample capillaries such as the HFID and CL analyzers. It is also assumed that the system has sample/span valves that perform the function of valves V9 and V13 in Figure D79–1.

(i) Operate the analyzer(s) at the in-use capillary pressure.

(ii) Adjust the bypass flow rate to the flow rate recorded in paragraph (b)(1)(ii) of this section.

(iii) Measure and record the response time from the sample/span valve(s) per paragraph (a) of this section.

(iv) The response time (step (iii)) can be determined by switching from the ''sample'' position to the ''span'' position of the sample/span valve and observing the analyzer response on a chart recorder. Normally, the ''sample'' position would select a ''room air'' sample and the ''span'' position would select a span gas.

(v) Adjust the bypass flow rate to the normal in-use value.

(vi) Measure and record the response time from the sample/span valve(s) per paragraph (a) of this section.

(vii) Determine the slowest response time (step (iii) or step (iv)) and add 2 seconds to it.

§ 86.330–79 NDIR analyzer calibration.

(a) *Detector optimization*. If necessary, follow the manufacturer's instructions for initial start-up and basic operating adjustments.

(b) *Calibration curve*. Develop a calibration curve for each range used as follows:

(1) Zero the analyzer.

(2) Span the analyzer to give a response of approximately 90 percent of full-scale chart deflection.

(3) *Recheck the zero response*. If it has changed more than 0.5 percent of full scale, repeat steps (1) and (2).

(4) Record the response of calibration gases having nominal concentrations of 15, 30, 45, 60, 75, and 90 percent of full-scale concentration.

(5) *Generate a calibration curve*. The calibration curve shall be of fourth order or less, have five or fewer coefficients, and be of the form of equation (1) or (2). Include zero as a data point. Compensation for known impurities in the zero gas can be made to the zero-data point. The calibration curve must fit the data points within 2 percent of point or 1 percent of full scale, whichever is less.

$$y = Ax^4 + Bx^3 + Cx^2 + Dx + E \qquad (1)$$

$$y = \frac{x}{Ax^4 + Bx^3 + Cx^2 + Dx + E} \qquad (2)$$

where:

y = concentration

x = chart deflection

(6) *Option*. A new calibration curve need not be generated if: (i) A calibration curve conforming to step (5) exists; (ii) The responses generated in step (4) are within 1 percent of full scale or 2 percent of point, whichever is less, of the responses predicted by the calibration curve for the gases used in step (4).

(7) If multiple range analyzers are used, only the lowest range must meet the curve fit requirements below 15 percent of full scale.

(c) If any range is within 2 percent of being linear a linear calibration may be used. To determine if this criterion is met:

(1) Perform a linear least-square regression on the data generated. Use an equation of the form $y = mx$, where x is the actual chart deflection and y is the concentration.

(2) Use the equation $z = y/m$ to find the linear chart deflection (z) for each calibration gas concentration (y).

(3) Determine the linearity ($\%L$) for each calibration gas by:

$$\text{Percent } L = \frac{(z - x)}{\text{Full-scale linear chart deflection}}(100)$$

(4) The linearity criterion is met if the $\%L$ is less than ±2 percent for each data point generated. For each emission test, a calibration curve of the form $Y = mx$ is to be used. The slope (m) is defined for each range by the spanning process.

[42 FR 45154, Sept. 8, 1977, as amended at 46 FR 50495, Oct. 13, 1981; 47 FR 49807, Nov. 2, 1982]

§ 86.331–79 Hydrocarbon analyzer calibration.

The following steps are followed in sequence to calibrate the hydrocarbon analyzer. It is suggested, but not required, that efforts be made to minimize relative response variations.

(a) If necessary, follow manufacturer's instructions for instrument start-up and basic operating adjustments.

(b) Set the oven temperature 5 °C hotter than the required sample-line temperature. Allow at least one-half hour after the oven has reached temperature for the system to equilibrate.

(c) *Initial fuel flow adjustment.* With the fuel and air-flow rates set at the manufacturer's recommendations, introduce a 350 ppmC±75 ppmC span gas to the detector. Determine the response at a given fuel flow from the difference between the span-gas response and the zero-gas response. Incrementally adjust the fuel flow above and below the manufacturer's specification. Record the span and zero response at these fuel flows. A plot of the difference between the span and zero response versus fuel flow will be similar to the one shown in Fig. D79–3.

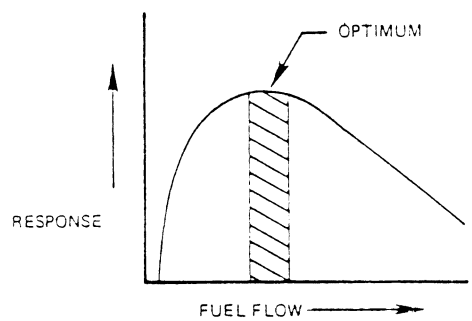

Figure D79-3 RESPONSE VS. FUEL FLOW

Adjust the fuel-flow rate to the rich side of the curve, as shown. This is initial flow-rate setting and may not be the final optimized flow rate.

(d) *Oxygen interference optimization.* Choose a range where the oxygen interference check gases (see § 86.308) will fall in the upper 50 percent. Conduct this test with the oven temperature set as required. Oxygen interference check gas specifications are found in § 86.308.

(1) Zero the analyzer.

(2) Span the analyzer with the zero-percent oxygen blend for gasoline-fueled engines. Diesel engine instruments shall be spanned with the 21-percent oxygen blend.

(3) *Recheck zero response.* If it has changed more than 0.5 percent of full scale repeat paragraphs (d) (1) and (2) of this section.

(4) Introduce the 5 percent and 10 percent oxygen interference check gases.

(5) *Recheck the zero response.* If it has changed more ±1 percent of full scale, repeat the test.

(6) Calculate the percent of oxygen interference ($\%O_2I$) for each mixture in step (4).

$$\text{Percent } O_2 I = \frac{B - \text{Analyzer response } (ppmC)}{B}(100)$$

$$\text{Analyzer response} = \frac{A}{\text{Percent of full-scale analyzer response due to } A \times (\text{Percent of full-scale analyzer response due to } B)}$$

A = hydrocarbon concentration (*ppmC*) of the span gas used in step (2).

B = hydrocarbon concentration (*ppmC*) of the oxygen interference check gases used in step (4).

(7) The percent of oxygen interference ($\%O_2I$) must be less than ±3.0 percent for all required oxygen interference check gases prior to testing.

(8) If the oxygen interference is greater than the specifications, incrementally adjust the air flow above and below the manufacturer's specifications, repeating paragraphs (d) (1) through (7) of this section for each flow.

(9) If the oxygen interference is greater than the specification after adjusting the air flow, vary the fuel flow and thereafter the sample flow, repeating paragraphs (d) (1) through (7) of this section for each new setting.

(10) If the oxygen interference is still greater than the specifications, repair or replace the analyzer, FID fuel, or burner air prior to testing. Repeat this section with the repaired or replaced equipment or gases.

(e) *Linearity check*. For each range used, check linearity as follows:

(1) With the fuel flow, air flow and sample flow adjust to meet the oxygen interference specification, zero the analyzer.

(2) Span the analyzer using a calibration gas that will provide a response of approximately 90 percent of full-scale concentration.

(3) *Recheck the zero response*. If it has changed more than 0.5 percent of full scale, repeat steps (1) and (2).

(4) Record the response of calibration gases having nominal concentrations of 30, 60, and 90 percent of full-scale concentration. It is permitted to use additional concentrations.

(5) Perform a linear least square regression on the data generated. Use an equation of the form $y = mx$, where x is the actual chart deflection and y is the concentration.

(6) Use the equation $z = y/m$ to find the linear chart deflection (z) for each calibration gas concentration (y).

(7) Determine the linearity ($\%L$) for each calibration gas by:

$$\text{Percent } L = \frac{(z - x)}{\text{Full-scale linear chart deflection}}(100)$$

(8) The linearity criterion is met if the $\%L$ is less than ±2 percent for each data point generated. Below 40 *ppmC* the linearity criterion may be expanded to ±4 percent. For each emission test, a calibration curve of the form $y = mx$ is to be used. The slope (m) is defined for each range by the spanning process.

(9) If the $\%L$ for any point exceeds the specifications in step (8), the air, fuel, and sample-flow rates may be varied within the boundaries of the oxygen interference specifications.

(10) If the $\%L$ for any data point still exceeds the specifications, repair or replace the analyzer, FID fuel, burner air, or calibration bottles prior to testing. Repeat the procedures of this section with the repaired or replaced equipment or gases.

(f) *Optimized flow rates*. The fuel-flow rate, air-flow rate and sample-flow rate

are defined as ''optimized'' at this point.

§ 86.332–79 Oxides of nitrogen analyzer calibration.

(a) At least monthly during testing, perform a converter efficiency check as described in paragraph (b) of this section. Perform a monthly linearity check as described in paragraph (c) of this section.

(b) *Converter-efficiency check.* The apparatus described and illustrated in Figure D79–4 is to be used to determine the conversion efficiency of devices that convert NO_2 to NO. The following procedure is to be used in determining the values to be used in the equation below:

(1) Follow the manufacturer's instructions for instrument startup and operation.

(2) Zero the oxides of nitrogen analyzer.

(3) Connect the outlet of the NO_X generator (see Figure D79–4) to the sample inlet of the oxides of nitrogen analyzer which has been set to the most common operating range.

(4) Introduce into the NO_X generator-analyzer system a span gas with a NO concentration equal to approximately 80 percent of the most common operating range.

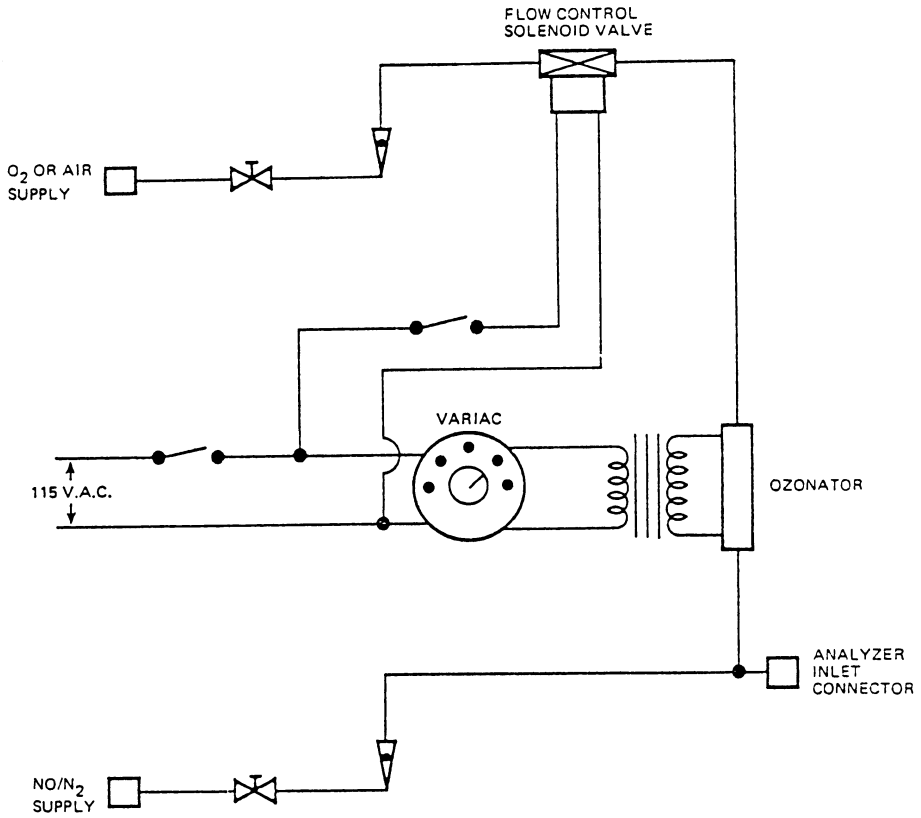

FIGURE D79-4 NO_x CONVERTER EFFICIENCY DETECTOR

(5) With the oxides of nitrogen analyzer in the NO Mode, record the concentration of NO indicated by the analyzer.

(6) Turn on the NO_X generator O_2 (or air) supply and adjust the O_2 (or air) flow rate so that the NO indicated by the analyzer is about 10 percent less than indicated in step (5). Record the concentration of NO in this $NO+O_2$ mixture.

(7) Switch the NO_X generator to the generation mode and adjust the generation rate so that the NO measured on the analyzer is 20 percent of that measured in step (5). There must be at least 10 percent unreacted NO at this point. Record the concentration of residual NO.

(8) Switch the oxides of nitrogen analyzer to the NO_X mode and measure total NO_X. Record this value.

(9) Switch off the NO_X generation, but maintain gas flow through the system. The oxides of nitrogen analyzer will indicate the total NO_X in the $NO+O_2$ mixture. Record this value.

(10) Turn off the NO_X generator O_2 (or air) supply. The analyzer will now indicate the total NO_X in the original NO in N_2 mixture. This value should be no more than 5 percent above the value indicated in step (4).

(11) Calculate the efficiency of the NO_X converter by substituting the concentrations obtained into the following equation:

$$\text{Percent Efficiency} = [1 + (a - b)/(c - d)] \times 100$$

where:

a=concentration obtained in step (8).
b=concentration obtained in step (9).
c=concentration obtained in step (6).
d=concentration obtained in step (7).

The efficiency of the converter shall be greater than 90 percent. Adjustment of the converter temperature may be necessary to maximize the efficiency. If the converter does not meet the conversion-efficiency specifications, repair or replace the unit prior to testing. Repeat the procedures of this section with the repaired or new converter.

(c) *Linearity check*. For each range used, check linearity as follows:

(1) With the operating parameters adjusted to meet the converter efficiency check and the quench checks, zero the analyzer.

(2) Span the analyzer using a calibration gas that will give a response of approximately 90 percent of full-scale concentration.

(3) *Recheck the zero response*. If it has changed more than 0.5 percent of full scale, repeat steps (1) and (2).

(4) Record the response of calibration gases having nominal concentrations of 30, 60 and 90 percent of full-scale concentration. It is permitted to use additional concentrations.

(5) Perform a linear least-square regression on the data generated. Use an equation of the form $y=mx$ where x is the actual chart deflection and y is the concentration.

(6) Use the equation $z=y/m$ to find the linear chart deflection (z) for each calibration gas concentration (y).

(7) Determine the linearity ($\%L$) for each calibration gas by:

$$\text{Percent } L = \frac{(z - x)}{\text{Full-scale linear chart deflection}}(100)$$

(8) The linearity criterion is met if the $\%L$ is less than ±2 percent of each data point generated. For each emission test, a calibration curve of the form $y=mx$ is to be used. The slope (m) is defined for each range by the spanning process.

(9) If the $\%L$ exceeds ±2 percent for any data point generated, repair or replace the analyzer or calibration bottles prior to testing. Repeat the procedures of this section with the repaired or replaced equipment or gases.

(10) Perform a converter-efficiency check (see paragraph (b) of this section).

(11) The operating parameters are defined as ''optimized'' at this point.

(d)–(e) [Reserved]

[42 FR 45154, Sept. 8, 1977, as amended at 46 FR 50495, Oct. 13, 1981; 47 FR 49807, Nov. 2, 1982; 52 FR 47869, Dec. 16, 1987; 58 FR 58423, Nov. 1, 1993]

§ 86.333–79 Dynamometer calibration.

(a) If necessary, follow the manufacturer's instructions for initial start-up and basic operating adjustments.

(b) Check the dynamometer torque measurement for each range used by the following:

(1) Warm up the dynamometer following the equipment manufacturer's specifications.

(2) Determine the dynamometer calibration moment arm. Equipment manufacturer's data, actual measurement, or the value recorded from the previous calibration used for this subpart may be used.

(3) Calculate the indicated torque (*IT*) for each calibration weight to be used by:

$$IT = \text{calibration weight (lb)} \times \text{calibration moment arm (ft)}$$

(4) Attach each calibration weight specified in § 86.312 to the moment arm at the calibration distance determined in step (2). Record the power measurement equipment response (ft-lb) to each weight.

(5) For each calibration weight, compare the torque value measured in step (4) to the calculated torque determined in step (3).

(6) The measured torque must be within 2 percent of the calculated torque.

(7) If the measured torque is not within 2 percent of the calculated torque, adjust or repair the system. Repeat steps (1) through (6) with the adjusted or repaired system.

(c) *Option*. A master load-cell or transfer standard may be used to verify the in-use torque measurement system.

(1) The master load-cell and read out system must be calibrated with weights at each test weight specified in § 86.312–79. The calibration weights must be traceable to within 0.1 percent of NBS weights.

(2) Warm up the dynamometer following the equipment manufacturer's specifications.

(3) Attach the master load-cell and loading system.

(4) Load the dynamometer to a minimum of 6 equally spaced torque values as indicated by the master load-cell for each in-use range used.

(5) The in-use torque measurement must be within 2 percent of the torque measured by the master system for each load used.

(6) If the in-use torque is not within 2 percent of the master torque, adjust or repair the system. Repeat step (2) through step (5) with the adjusted or repaired system.

(d) The dynamometer calibration must be completed within 2 hours from the completion of the dynamometer warm-up.

§ 86.334–79 Test procedure overview.

(a) The test consists of prescribed sequences of engine operating conditions to be conducted on an engine dynamometer. The exhaust gases generated during engine operation are sampled for specific component analysis through the analytical train. The test is applicable to engines equipped with catalytic or direct-flame afterburners, induction system modifications, or other systems, or to uncontrolled engines.

(b) The tests are designed to determine the brake-specific emissions of hydrocarbons, carbon monoxide, and oxides of nitrogen. The gasoline-fueled engine test consists of 1 warm-up cycle and 1 hot cycle. The Diesel engine test consists of 3 idle modes and 5 power modes at each of 2 speeds which span the typical operating range of Diesel engines. These procedures require the determination of the concentration of each pollutant, the fuel flow and the power output during each mode. The measured values are weighted and used to calculate the grams of each pollutant emitted per brake-horsepower hour.

(c)(1) When an engine is tested for exhaust emissions or is operated for service accumulation on an engine dynamometer, the complete engine shall be tested, with all emission control devices installed and functioning.

(2) Evaporative emission controls need not be connected if data are provided to show that normal operating

conditions are maintained in the engine induction system.

(3) On air cooled engines, the fan shall be installed.

(4) Additional accessories (e.g., oil cooler, alternators, air compressors, etc.) may be installed with advance approval by the Administrator.

(d) All emission control systems installed on or incorporated in a new motor vehicle engine shall be functioning during all procedures in this subpart. In cases of component malfunction or failure, maintenance to correct component failure or malfunction shall be authorized in accordance with § 86.079–25.

§ 86.335–79 Gasoline-fueled engine test cycle.

(a) The following test sequence shall be followed in dynamometer operation tests of gasoline-fueled heavy-duty engines. Diesel engines are covered in § 86.336.

Cycle No.	Mode No.	Mode	Observed torque (percent of maximum observed)	Time in mode-seconds	Cumulative time-seconds	Weighting factors
1	1	Idle		60	60	0.232
1	2	Cruise	25	60	120	.077
1	3	PTA	55	60	180	.147
1	4	Cruise	25	60	240	.077
1	5	PTD	10	60	300	.057
1	6	Cruise	25	60	360	.077
1	7	FL	90	60	420	.113
1	8	Cruise	25	60	480	.077
1	9	CT		60	540	.143
2	10	Cruise	25	60	600	.077
2	11	PTA	55	60	660	.147
2	12	Cruise	25	60	720	.077
2	13	PTD	10	60	780	.057
2	14	Cruise	25	60	840	.077
2	15	FL	90	60	900	.113
2	16	Cruise	25	60	960	.077
2	17	CT		60	1,020	.143
2	18	Idle		60	1,080	.232

(b) Except for idles, the engine dynamometer shall be operated at a constant speed of 2000 rpm±100 rpm. Speed deviations, not to exceed 200 rpm, will be allowed during the first 10 seconds of each mode.

(c) The times in-mode specified in paragraph (a) for the CT modes are ±2 seconds. All other times in-mode are ±4 seconds.

(d) The first 35 seconds of each 60 second engine power mode is allowed for engine-dynamometer stabilization. After this stabilization period the torque must be held at the specified value ±5 percent until the exhaust gas analysis period. During the exhaust gas analysis period, the last 10 seconds of each nonclosed throttle mode the engine torque must be at the specified value ±2 percent of the maximum torque observed. For example, mode 3 torque shall be held between 53 and 57 percent of maximum torque (55±2 percent) during the exhaust analysis period. Prior to the analysis period but excluding the first 35 seconds of the mode, the torque shall be held between 50 and 60 percent of maximum torque (55%±5%).

(e) The idle operating mode shall be carried out at the manufacturer's recommended curb-idle engine speed. Arrive at the last idle mode by closing the throttle, braking the dynamometer to the engine idle speed, and unloading the dynamometer.

(f) The CT operating mode shall be carried out at the same engine speed as specified in paragraph (b) of this section.

(g) If the Administrator determines that an engine shall be tested as an automatic transmission code engine, then a load shall be applied by the dynamometer during the idle modes (1 and 18) such that the engine speed is decreased from the recommended dynamometer-idle speed to the recommended curb-idle speed. The engine

idle torque recorded for the calculations in § 86.345 shall be zero.

(h) If the operating conditions specified in paragraph (a) of this section for modes 2 through 8, and 10 through 16 cannot be maintained, the Administrator may authorize deviations from the specified load conditions. Such deviations shall not exceed 5 percent of the maximum torque at the test speed. The minimum deviations, above and below the specified load, necessary for stable operation shall be determined by the manufacturer and approved by the Administrator prior to the test run. Emission tests shall be performed by operating the engine at the higher approved load setting during cycle 1 and at the lower approved load setting during cycle 2. The weighting factors shall be as specified in paragraph (a) of this section.

(Secs. 206, 301(a), Clean Air Act as amended (42 U.S.C. 7525, 7601(a)))

[42 FR 45154, Sept. 8, 1977, as amended at 44 FR 16917, Mar. 20, 1979; 47 FR 49813, Nov. 2, 1982]

§ 86.336–79 Diesel engine test cycle.

(a) The following 13-mode cycle shall be followed in dynamometer operation tests of heavy-duty Diesel engines. Gasoline-fueled engines are covered in § 86.335.

Test Segment	Mode No.	Engine Speed	Observed torque (percent of maximum observed)	Time in mode (minutes)		Maximum cumulative time (minutes)
				Minimum	Maximum	
1	1	Curb-idle		4.5	6.0	
1	2	Intermediate	2	4.5	6.0	
1	3	.....do	25	4.5	6.0	
1	4	.....do	50	4.5	6.0	42
1	5	.....do	75	4.5	6.0	
1	6	.....do	100	4.5	6.0	
1	7	Curb-idle		4.5	6.0	
2	8	Rated	100	4.5	6.0	
2	9	.....do	75	4.5	6.0	
2	10	.....do	50	4.5	6.0	36
2	11	.....do	25	4.5	6.0	
2	12	.....do	2	4.5	6.0	
2	13	Curb-idle		4.5	6.0	

(b) During each mode the specified speed shall be held to within 50 rpm. Torque for each mode must be held at the specified value ±2 percent of the maximum torque observed. For example, mode 4 torque shall be held between 48 and 52 percent of maximum torque (50 ±2%).

(c) If the operating conditions specified in paragraph (b) of this section for modes 3, 4, 5, 9, 10, and 11 cannot be maintained, the Administrator may authorize deviations from the specified load conditions. Such deviations shall not exceed 10 percent of the maximum torque at the test speed. The minimum deviations, above and below the specified load, necessary for stable operation shall be determined by the manufacturer and approved by the Administrator prior to the test run. Emission tests shall be performed at each of the approved load settings, one above and one below the operating conditions specified in paragraph (a) of this section. The emission values obtained shall be calculated in accordance with § 86.345 except that the weighting factor shall be 0.04.

(d) If the Administrator determines that an engine shall be tested as an automatic transmission code engine, then a load shall be applied by the dynamometer during the idle modes (1, 7, and 13) such that the engine speed is decreased from the recommended dynamometer-idle speed to the recommended curb-idle speed. The engine-idle torque recorded for the calculations in § 86.345 shall be zero.

§ 86.337–79 Information.

The following information, as applicable, shall be recorded for each test:

(a) *Engine description and specification.* A copy of the information specified in this paragraph must accompany each engine sent to the Administrator

for compliance testing. The manufacturer need not record the information specified in this paragraph for each test if the information, with the exception of paragraphs (a) (3), (12), and (13), is included in the manufacturer's Part I.

(1) Engine-system combination.

(2) Engine identification numbers.

(3) Number of hours of operation accumulated on engine.

(4) Rated maximum horsepower and torque.

(5) Maximum horsepower and torque speeds.

(6) Engine displacement.

(7) Governed speed.

(8) Manufacturer's start-up and warm-up reference, (gasoline-fueled engines only).

(9) Curb-idle rpm.

(10) Dynamometer-idle rpm (automatic transmission code engines only).

(11) Maximum horsepower at 2000 rpm (gasoline-fueled engines only).

(12) Fuel consumption and maximum torque at 2000 rpm (gasoline-fueled engines only).

(13) Fuel consumption at maximum power and torque (Diesel engines only).

(14) Maximum air flow (Diesel engines only).

(15) Air inlet restriction (Diesel engines only).

(16) Exhaust pipe diameter(s) (Diesel engines only).

(17) Maximum exhaust system back pressure (Diesel engines only).

(18) Maximum exhaust system back pressure at 2000 rpm, if applicable (gasoline-fueled engines only).

(b) *Test data; general.* This information may be recorded at any time between 4 hours prior to the test and 4 hours after the test.

(1) Engine-system combination.

(2) Engine identification number.

(3) Instrument operator.

(4) Engine operator.

(5) Number of hours of operation accumulated on the engine prior to beginning the warm-up portion of the test.

(6) Fuel identification.

(7) Date of most recent analytical assembly calibration.

(8) All pertinent instrument information such as tuning, gain, serial numbers, detector number, calibration curve numbers, etc. As long as this information is traceable, it may be summarized by system number or analyzer identification numbers.

(c) *Test data; pre-test.* (1) Date and time of day.

(2) Test number.

(3) Ambient temperature in dynamometer testing room (gasoline-fueled engines only).

(4) Barometric pressure, pre-test for gasoline-fueled engines, pre-test segment for Diesel engines.

(5) Engine intake humidity, pre-test for gasoline-fueled engines, pre-test segment for Diesel engines with non-conditioned air supply systems.

(6) Maximum observed torque for intermediate and rated speeds (Diesel engines only).

(7) Maximum observed torque at 2000 rpm (gasoline-fueled engines only).

(8) *Recorder chart or equivalent.* Identify for each test (test segment for Diesel engines) zero traces for each range used, and span traces for each range used.

(d) *Test data; modal.* (1) Recorder chart or equivalent. Identify for each test mode the emission concentration traces and the associated analyzer range(s). The start and finish of each test.

(2) Observed engine torque.

(3) Observed engine rpm.

(4) Record engine torque and engine rpm continuously with a chart recorder or equivalent recording device.

(5) Intake air flow and depression for each mode (Diesel engines only).

(6) Engine intake air temperature for each mode (Diesel engines only).

(7) *Fuel flow for each mode.* If the fuel flow measurement is a volume measurement system, record the fuel temperature in the measurement system for fuel density corrections to the mass flow rate. If the fuel temperature is within 3 °C (5.4 °F) of the calibration temperature, no density correction is required.

(8) Engine intake humidity (only for Diesel engines with humidity conditioned air supply).

(e) *Test data; post-test.* (1) Recorder chart or equivalent. Identify the hang-up check.

(2) *Recorder chart or equivalent.* Identify the zero traces for each range used

and the span traces for each range used.

(3) Ambient temperature in the dynamometer testing room (gasoline-fueled engines only).

(4) Total number of hours of operation accumulated on the engine.

[42 FR 45154, Sept. 8, 1977, as amended at 46 FR 50495, Oct. 13, 1981; 47 FR 49807, Nov. 2, 1982]

§ 86.338–79 Exhaust measurement accuracy.

(a) The analyzers must be operated between 15 percent and 100 percent of full-scale chart deflection during the measurement of the emissions for each mode. The exceptions to the lower limit of this operating rule are:

(1) The analyzer's response may be less than 15 percent of full-scale if the full-scale value is 155 ppm (or ppm C) or less.

(2) *Option.* For CO analysis the analyzer's response may be less than 15 percent of full scale if the full-scale value is 5500 ppm or less.

(3) The analyzer's response may be less than 15 percent of full scale if the emissions from the engine are erratic and the average chart-deflection value is greater than 15 percent of full scale.

(4) For gasoline-fueled engines, the analyzer's response may be less than 15 percent of full scale during the initial part of the CT mode provided that average chart-deflection value is greater than 15 percent of full scale.

(5) The analyzer's response may be less than 15 percent of full scale if the contribution of all modes read below the 15 percent level is less than 10 percent by mass of the final test results.

(6) The HC analyzer's response may be less than 15 percent of full-scale when transient emissions (spikes) can be reasonably expected to exceed 90 percent of full-scale. Higher analyzer ranges may be used provided that the precision and linearity of the analyzer at the level of the readings below 15 percent meets the specifications of the range that would be required if the transient emissions did not exist.

(b) [Reserved]

(Secs. 206, 301(a), Clean Air Act as amended (42 U.S.C. 7525, 7601(a)))

[42 FR 45154, Sept. 8, 1977, as amended at 44 FR 16917, Mar. 20, 1979; 46 FR 50495, Oct. 13, 1981, and 47 FR 49807, Nov. 2, 1982]

§ 86.339–79 Pre-test procedures.

(a) Allow a minimum of 30 minutes warm-up in the stand-by or operating mode prior to spanning the analyzers.

(b) Replace or clean the filter elements and then vacuum leak check the system, § 86.328(a). A pressure leak check is also permitted per § 86.328(b). Allow the heated sample line, filters, and pumps to reach operating temperature.

(c) Perform the following system checks:

(1) If a stainless steel NO_2 to NO converter is used, prior to gasoline-fueled engine tests, purge the converter with air (zero-grade air, room air, or O_2) for a minimum of 30 minutes. The converter must be at operational temperature while purging.

(2) Check the sample-line temperature (see § 86.310).

(3) Check the system response time (see § 86.329). System response time may be applied from the most recent check of response time if all of the following are met:

(i) The flow rate for each flow meter is equal to or greater than the flow rate recorded in § 86.329(b)(1)(ii).

(ii) For analyzers with capillaries, the response time from the sample/span valve is measured using in-use pressures and bypass flows (see § 86.329(b)(2)).

(iii) The response time measured in step (ii) is equal to or less than the response time determined in § 86.329(b)(2)(vii).

(4) A hang-up check is permitted.

(5) A converter-efficiency check is permitted. The check need not conform to § 86.332(b). The test procedure may be aborted at this point in the procedure in order to repair the NO_2 to NO converter. If the test is aborted, the converter must pass the efficiency check described in § 86.332(b) prior to starting the dynamometer test run.

(d) Introduce the zero-grade gases at the same flow rates and pressures used to calibrate the analyzers and zero the

analyzers on the lowest anticipated range that will be used during the test. Immediately prior to each test (segment, for Diesel engines), obtain a stable zero for each anticipated range that will be used during the test.

(e) Introduce span gases to the instruments under the same flow conditions as were used for the zero gases. Adjust the instrument gains on the lowest range that will be used to give the desired value. Span gases should have a concentration greater than 70 percent of full scale for each range used. Immediately prior to each test and also prior to each segment of the Diesel test, record the response to the span gas and the span-gas concentration for each range that will be used during the test.

(f) *Check the zero responses.* If they have changed more than 0.5 percent of full scale, repeat paragraphs (d) and (e) of this section.

(g) Check system flow rates and pressures. Note the values of gauges G3 and G4 for reference during the test.

§ 86.340–79 Gasoline-fueled engine dynamometer test run.

(a) This section applies to gasoline-fueled engines only. Diesel engines are covered in § 86.341.

(b)(1) Mount test engine on the engine dynamometer.

(2) Install instrumentation and sample probe.

(3) Read and record the general test data as specified in § 86.337(b).

(c) Precondition the engine by the following continuous steps:

(1) The engine shall be started and operated at:

(i) Zero load in accordance with the manufacturer's start-up and warm-up procedures for 1 minute ±30 sec;

(ii) A torque equivalent to 10±3 percent of the most recent determination of maximum torque for 4 minutes ±30 second at 2,000 rpm. This torque level may be exceeded if the choke and fast idle cam mechanism would normally result in a stabilized idle speed in excess of 2,000 rpm.

(iii) A torque equivalent to 55±5 percent of the most recent determination of maximum torque for 35 minutes ±1 minute at 2000 rpm;

(iv) *Option.* If the engine has been operating on service accumulation for a minimum of 40 minutes, the service accumulation may be substituted for steps (i) through (iii).

(2) If tested under the provisions of § 86.079–29, check specifications as required. This check must be performed within 20 minutes after completion of engine preconditioning;

(3) Determine the maximum torque of the engine at 2000 rpm ±100 rpm;

(i) Operate the engine with the throttle fully opened for a maximum of three minutes. During the second minute of operation, record the high and low torque readings. The average of these two readings will be the maximum torque value at 2000 rpm.

(ii) Calculate the torque corresponding to 10, 25, 55, and 90 percent of the observed maximum torque value.

(4) Determine the analyzer ranges required for each mode specified in § 86.335 to meet the range specifications of § 86.338. Prior to determining the range selection, the automatic dynamometer controller, if used, may be calibrated for the prevailing ambient conditions. The engine must not be operated for more than 30 minutes. Cycle 1, or cycles 1 and 2, specified in § 86.335, may be used for this purpose.

(5) The engine shall be turned off and allowed to stand for at least 1 hour, but not more than 2 hours, at an average ambient temperature of 25 °C±5 °C (77 °F±9 °F).

(d) The following steps shall be taken for each test:

(1) Maintain dynamometer test cell average ambient temperature at 25 °C±5 °C (77 °F±9 °F);

(2) Observe pre-test procedures; § 86.339;

(3) Start cooling system;

(4) Start engine and operate in accordance with manufacturer's start-up and warm-up procedures. The duration of the warm-up procedures shall be 5 minutes ±30 seconds. Sample flow may begin during the warm-up;

(5) Read and record all pre-test data specified in § 86.337(c) during the 5 minute warm-up;

(6) Release the choke idle-stop (if necessary) and return the engine throttle control to the curb-idle position, start sample flow and recorders if not

already started, and begin test sequence of § 86.335;

(7) Should it be determined that the test must be rerun, then only the soak specified in paragraph (c)(5) of this section need be performed prior to paragraph (d) of this section;

(8) Perform the test cycle, § 86.335, and continuously record exhaust gas concentrations;

(9) Read and record all modal data specified in § 86.337(d) during the test cycle;

(10) The engine speed and load must be maintained within the requirements of § 86.343;

(11) If at any time during a test, the test equipment malfunctions or the specifications in paragraph (d)(10) of this section are not met, the test is void, and may be aborted. The test sequence may be restarted under the provisions of paragraph (c)(5) of this section.

(e) *Exhaust gas measurements.* (1) Measure HC, CO, CO_2, and NO_X volume concentration in the exhaust sample. Should the analyzer response exceed 100 percent of full scale or respond less than 15 percent of the full scale, the next higher or lower analyzer range shall be used per § 86.338. For exceptions to the lower limit see § 86.338. Should the fuel flow instrument read below 20 percent of the full-scale value, a flow measurement unit with a lower scale must be used unless the option in § 86.314 is desired.

(2) For each analyzer, each range that may be used during a test must have the zero and span responses recorded prior to the execution of that test. Only the range(s) used to measure the emissions during a test are required to have their zero and span recorded after the completion of the test.

(3) If during an emission test the value of gauges downstream of the NDIR analyzer(s) (G3 or G4) differs by more than ±2 inches of water from the pretest value, the test is void.

(Secs. 206, 301(a), Clean Air Act as amended (42 U.S.C. 7525, 7601(a)))

[42 FR 45154, Sept. 8, 1977, as amended at 44 FR 16917, Mar. 20, 1979; 46 FR 50496, Oct. 13, 1981; 47 FR 49807, 49813, Nov. 2, 1982]

§ 86.341–79 Diesel engine dynamometer test run.

(a) This section applies to Diesel engines only. Gasoline-fueled engines are covered in § 86.340.

(b) The temperature of the air supplied to the engine shall be between 68 °F and 86 °F. The fuel temperature at the pump inlet shall be 100 °F±10 °F. The observed barometric pressure shall be between 28.5 inches and 31 inches Hg. Higher air temperature or lower barometric pressure may be used, if desired, but no allowance shall be made for increased emissions because of such conditions unless correction factors are developed and approved in advance by the Administrator.

(c) The governor and fuel system shall have been adjusted to provide engine performance at the levels in the application for certification required under § 86.079–21. These adjustments are only permitted under the provisions of § 86.079–25.

(d) The following steps shall be taken for each test:

(1) Install instrumentation and sample probes as required;

(2) Observe pre-test procedure, § 86.339;

(3) Read and record the general test data as specified in § 86.337(b);

(4) Start cooling system;

(5) Precondition the engine in the following manner:

(i) Operate the engine at idle for 2 to 3 minutes;

(ii) Operate the engine at approximately 50 percent power at the peak torque speed for 5 to 7 minutes;

(iii) Operate the engine at rated speed and maximum horsepower for 25 to 30 minutes;

(iv) *Option.* It is permitted to precondition the engine at rated speed and maximum horsepower until the oil and water temperatures are stabilized. The temperatures are defined as stabilized if they are maintained within 2 percent of point for 2 minutes. The engine must be operated a minimum of 10 minutes for this option. This optional procedure may be substituted for step (iii);

(v) *Option.* If the engine has been operating on service accumulation for a minimum of 40 minutes, the service accumulation may be substituted for steps (i) through (iii);

(vi) Longer preconditioning times may be used only if prior approval is obtained from the Administrator.

(6) Within a total elapsed time of 10 minutes or less, determine by experimentation the maximum torque at the rated and intermediate speeds;

(7) Calculate the torque corresponding to 2, 25, 50, 75, and 100 percent of the maximum observed torque for the rated and intermediate speeds;

(8) Read and record all pre-test data specified in § 86.337(c);

(9) Start the test cycle, § 86.336, within 10 minutes, after determining test load using the torque values determined in paragraph (d)(6) of this section;

(10) Read and record all modal data specified in § 86.337(d) during the last 2 minutes of each mode;

(11) Continuously record the analyzer's response to the exhaust gas during each test segment;

(12) Test segments may be repeated;

(13) If a delay of more than 20 minutes occurs between the end of one segment and the beginning of another segment the test is void. The test may be restarted at paragraph (d)(8) of this section. If the delay exceeds 4 hours, the test shall be restarted at paragraph (d)(2) of this section;

(14) The engine speed and load must be maintained within the requirements of § 86.336 during the last 2 minutes of each mode. If the requirement is not met for all modes during a test segment, that segment of the test is void. The test segment may be restarted beginning with paragraph (d)(8) of this section;

(15) If at any time during a test segment, the test equipment malfunctions or the specifications in paragraph (d)(14) of this section are not met, the test segment is void, and may be aborted. The test segment may be restarted beginning with paragraph (d)(8) of this section;

(16) Fuel flow and air flow during the idle or 2-percent load conditions may be determined just prior to or immediately following the dynamometer sequence, if longer times are required for accurate measurements.

(e) *Exhaust gas measurements.* (1) Measure HC, CO, CO_2, and NO_X volume concentration in the exhaust sample. Should the analyzer response exceed 100 percent of full scale or respond less than 15 percent of full scale, the next higher or lower analyzer range shall be used per § 86.338. For exceptions to the lower limit see § 86.338. Should the fuel flow instrument read below 20 percent of full-scale value, a smaller flow measurement unit must be used unless the option in § 86.314 is desired.

(2) Each analyzer range that may be used during a test segment must have the zero and span responses recorded prior to the execution of that test segment. Only the range(s) used to measure the emissions during a test segment are required to have their zero and span recorded after the completion of the test segment.

(3) It is permitted to change filter elements between test segments.

(4) A leak check is permitted between test segments.

(5) A hang-up check is permitted between test segments.

(6) If, during the emission measurement portion of a test segment, the value of the gauges downstream of the NDIR analyzer(s) G3 or G4 differs by more than ±2 inches of water from the pretest value, the test segment is void.

[42 FR 45154, Sept. 8, 1977, as amended at 46 FR 50496, Oct. 13, 1981, and 47 FR 49807, Nov. 2, 1982]

§ 86.342–79 Post-test procedures.

(a) Begin a hang-up check within 30 seconds of the completion of the last mode in the test. Use the following procedure:

(1) Introduce a zero-grade gas or room air into the sample probe or valve V2 to check the ''hangup zero'' response. Simultaneously start a time measurement.

(2) Select the lowest HC range used during the test;

(3) The difference between the span-zero response and the hang-up zero response shall not be greater than 5.0 percent of full scale or 10 ppmC whichever is greater, within:

(i) 50 seconds for gasoline-fueled engine test, or

(ii) 4 minutes for Diesel engine tests, or

(b) Begin the analyzer span checks within 6 minutes after the completion of the last mode in the test. Record for

each analyzer the zero and span response for each range used during the preceding test or test segment.

(c) If during the test, the filter element(s) were replaced or cleaned, a vacuum check must be performed per § 86.328 immediately after the span checks. If the vacuum side leak check does not meet the requirements of § 86.328 the test is void.

(d) Read and record the post-test data specified in § 86.337(e).

(e) For a valid test, the analyzer drift between the before-test and after-test (before-segment and after-segment for Diesels) span checks for each analyzer must meet the following requirements:

(1) The span drift (defined as the change in the difference between the zero response and the span response) must not exceed 2.0 percent of full-scale chart deflection for each range used;

(2) The zero response drift must not exceed 2.0 percent of full-scale chart deflection for each range used above 155 ppm (or ppm C), or 3 percent of full-scale chart deflection for each range below 155 ppm (or ppm C).

(Secs. 206, 301(a), Clean Air Act as amended (42 U.S.C. 7525, 7601(a)))

[42 FR 45154, Sept. 8, 1977, as amended at 44 FR 16917, Mar. 20, 1979; 46 FR 50496, Oct. 13, 1981; 47 FR 49807, Nov. 2, 1982]

§ 86.343–79 Chart reading.

(a) A computer or any other automatic data processing device(s) may be used as long as the system meets the requirements of this subpart.

(b) Determine the location on the chart of the analyzer responses corresponding to the end of each mode.

(c) For gasoline-fueled engines, determine whether the test cycle was run in accordance with § 86.335 by observing either chart event marks, speed trace, torque trace, or concentration traces. The test will be invalidated if there is a deviation of more than:

(1) 2 seconds from the specified time for each CT mode, and 4 seconds for all other modes; or,

(2) Two percent of maximum torque during the exhaust gas sampling period (last 10 seconds on each nonclosed throttle gasoline-fueled engine mode); or

(3) 5 percent of maximum torque during the remainder of the mode, excluding the first 35 seconds of the mode; or

(4) 200 rpm during the first 10 seconds of each mode, or 100 rpm during the remainder of each mode.

(d) Determine chart deflections.

(1) Locate the last 10 seconds of each gasoline-fueled engine mode except CT. Locate the last 50 seconds of each gasoline-fueled engine CT mode. For all Diesel engine modes locate the last 60 seconds.

(2)(i) Divide the last 10 seconds or 60 seconds, whichever is applicable, into a minimum of 10 equally spaced increments. Determine the chart deflection of each increment for the CO_2, CO, HC, and NO_X analyzers.

(ii) Option for Diesel engine modes. If the deviation from a straight line (other than instrument noise) during this 60 seconds is less than ±5 percent of full-scale, the average chart deflection may be determined by eye. The average value (one number) may then be used in lieu of the 10 values required by paragraph (d)(2)(i) of this section.

(3) Other methods of determining the chart deflection of the analyzers may be used only with prior approval by the Administrator.

(e) Determine CO_2, CO, HC, and NO_X concentrations for each mode.

(1) If the option in paragraph (d)(2)(ii) of this section is employed, then those chart deflections for both linear and non-linear analyzers may be substituted for the average chart deflection in step (e)(2).

(2) For linear instruments, average the chart deflections determined in paragraph (d)(2)(i) of this section. Determine the concentration for this average chart deflection using calibration data.

(3) For non-linear instruments, calculate concentrations for each chart deflection determined in paragraph (d)(2)(i) of this section. Take the average of these concentrations for each mode.

(4) For purposes of this paragraph, calibration data includes calibration curves, linearity curves, span-gas responses, and zero-gas responses.

[42 FR 45154, Sept. 8, 1977, as amended at 47 FR 49813, Nov. 2, 1982]

§ 86.344–79 Humidity calculations.

(a) The following abbreviations (and units) are used in this section:

$BARO$ = barometric pressure (Pa)
H = specific humidity, (gm H_2O/gm of dry air)
K = 0.6220 gm H_2O/gm dry air
M_{air} = Molecular weight of air = 28.9645
M_{H2O} = Molecular weight of water = 18.01534
P_{DB} = Saturation vapor pressure of water at the dry bulb temperature (Pa)
P_{DP} = saturation vapor pressure of water at the dewpoint temperature (Pa)
P_v = partial pressure of water vapor (Pa)
P_{WB} = saturation vapor pressure of water at the wet bulb temperature (pa)
T_{DB} = Dry bulb temperature (°K)
T_{WB} = Wet bulb temperature (°K)
Y = Water-vapor volume concentration

(b) The specific humidity on a dry basis of the intake air (H) is defined by equation (1).

$$H = \frac{(K)\,(P_v)}{BARO - P_v} \qquad (1)$$

(c) The partial pressure of water vapor may be determined in two manners:

(1) A dew point device may be used. In that case:

$P_v = P_{DP}$

(2) A wet-bulb, dry-bulb method may be used. In that case ''Ferrels equation'' (eq. (2)) is used.

$$P_v = P_{WB} - 0.000660\,(T_{DB} - T_{WB})BARO[1 + 0.00115(T_{WB} - 273.15)] \qquad (2)$$

(d)(1) The saturation vapor pressure (P_{WB}) of water at the wet-bulb temperature is defined by equation (3) (Ref. Wexler and Greenspan, equation (23), National Bureau of Standards).

$$P_{WB} = \exp\left[B \text{ in } T_{WB} + \sum_{i=0}^{9} F_i T_{WB}^{i-2}\right] \qquad (3)$$

where:

P_{WB} is in Pascals (Pa)
T_{WB} = Web-bulb temperature (°K)
$B = -12.150799$
$F_0 = -8.49922(10)^3$
$F_1 = -7.4231865(10)^3$
$F_2 = 96.1635147$
$F_3 = 2.4917646(10)^{-2}$
$F_4 = -1.3160119(10)^{-5}$
$F_5 = -1.1460454(10)^{-8}$
$F_6 = 2.1701289(10)^{-11}$
$F_7 = -3.610258(10)^{-15}$
$F_8 = 3.8504519(10)^{-18}$
$F_9 = -1.4317(10)^{-21}$

(2) The table in Figure D79–5 may be used in lieu of equation (3).

(e) The saturated vapor pressure of water at the dry-bulb temperature (P_{DB}) is found (if required) by using dry-bulb absolute temperature (°K) in equation (3).

(f) The percent of relative humidity (RH) (if required) is defined by equation (4).

$$RH = \frac{P_n}{P_{DB}}(100) \qquad (4)$$

(g) The water-vapor volume concentration on a dry basis of the engine intake air (Y) is defined by equation (5).

$$Y = \frac{(H)(M_{air})}{(M_{H2O})} - \frac{P_v}{BARO - P_v} \qquad (5)$$

FIGURE D79–5—SATURATION VAPOR PRESSURE OVER WATER (PASCALS)

Temperature °C	0.0	0.1	0.2	0.3	0.4	0.5	0.6	0.7	0.8	0.9
0	610.752	615.207	619.690	624.203	628.744	633.315	637.916	642.545	647.205	651.894
1	656.614	661.364	666.144	670.955	675.796	680.669	685.572	690.507	695.473	700.471
2	705.500	710.562	715.655	720.781	725.939	731.130	736.354	741.611	746.901	752.224
3	757.581	762.971	768.396	773.854	779.347	784.874	790.436	796.033	801.664	807.331
4	813.034	818.771	824.545	830.355	836.200	842.082	848.001	853.956	859.948	865.978
5	872.045	878.149	884.291	890.470	896.688	902.945	909.239	915.573	921.945	928.357
6	934.808	941.298	947.828	954.399	961.009	967.660	974.351	981.083	987.856	994.670
7	1001.53	1008.42	1015.36	1022.34	1029.37	1036.43	1043.54	1050.70	1057.89	1065.13
8	1072.41	1079.74	1087.11	1094.52	1101.98	1109.48	1117.03	1124.63	1132.27	1139.95
9	1147.68	1155.46	1163.28	1171.15	1179.07	1187.04	1195.05	1203.11	1211.21	1219.37
10	1227.57	1235.83	1244.13	1252.48	1260.88	1269.32	1277.82	1286.37	1294.97	1303.62
11	1312.32	1321.07	1329.87	1338.73	1347.63	1356.59	1365.60	1374.67	1383.78	1392.95

FIGURE D79–5—SATURATION VAPOR PRESSURE OVER WATER (PASCALS)—Continued

Temperature °C	0.0	0.1	0.2	0.3	0.4	0.5	0.6	0.7	0.8	0.9
12	1402.17	1411.45	1420.78	1430.16	1439.60	1449.10	1458.64	1468.25	1477.91	1487.62
13	1497.39	1507.22	1517.11	1527.05	1537.04	1547.10	1557.21	1567.39	1577.62	1587.90
14	1598.25	1608.66	1619.12	1629.65	1640.24	1650.88	1661.59	1672.36	1683.18	1694.08
15	1705.03	1716.04	1727.12	1738.26	1749.46	1760.73	1772.06	1783.45	1794.91	1806.43
16	1818.01	1829.67	1841.38	1853.17	1865.02	1876.93	1888.91	1900.96	1913.08	1925.27
17	1937.52	1949.84	1962.23	1974.69	1987.21	1999.81	2012.48	2025.21	2038.02	2050.90
18	2063.85	2076.87	2089.97	2103.13	2116.37	2129.68	2143.07	2156.53	2170.06	2183.66
19	2197.34	2211.10	2224.93	2238.84	2252.82	2266.88	2281.02	2295.23	2309.52	2323.89
20	2338.34	2352.86	2367.47	2382.15	2396.91	2411.76	2426.68	2441.68	2456.77	2471.93
21	2487.18	2502.51	2517.93	2533.42	2549.00	2564.66	2580.41	2596.24	2612.16	2628.16
22	2644.25	2660.42	2676.68	2693.02	2709.46	2725.98	2742.59	2759.28	2776.07	2792.94
23	2809.91	2826.96	2844.11	2861.34	2878.67	2896.09	2913.60	2931.20	2948.89	2966.68
24	2984.56	3002.54	3020.61	3038.77	3057.03	3075.39	3093.84	3112.39	3131.03	3149.78
25	3168.62	3187.55	3206.59	3225.73	3244.96	3264.30	3283.73	3303.27	3322.91	3242.65
26	3362.49	3382.43	3402.48	3422.63	3442.89	3463.24	3483.71	3504.28	3524.95	3545.73
27	3566.62	3587.62	3608.72	3629.93	3651.25	3672.67	3694.21	3715.86	3737.61	3759.48
28	3781.46	3803.55	3825.75	3848.07	3870.50	3893.04	3915.70	3938.47	3961.36	3984.36
29	4007.48	4030.71	4054.06	4077.53	4101.12	4124.83	4148.65	4172.59	4196.66	4220.84
30	4245.15	4269.58	4294.13	4318.80	4343.60	4368.52	4393.56	4418.73	4444.02	4469.44

§ 86.345–79 Emission calculations.

(a) The following abbreviations (and units) are used in this section.

α = atomic hydrogen/carbon ratio of the fuel
φ = dry fuel-air ratio (measured)/fuel-air ratio (stoichiometric)
BARO = Barometric pressure (in. *H* g*A*)
BHP = Brake horsepower
BSCO = Brake specific carbon monoxide emissions, (gm/*BHP-HR)*
BSFC = Brake specific fuel consumption (lb/*BHP-HR*)
BSHC = Brake specific hydrocarbon emissions (gm/*BHP-HR*)
$BSNO_X$ = Brake specific oxides of nitrogen emissions (gm/*BHP-HR*)
DCO = CO volume concentration in exhaust, ppm (dry)
DCO_2 = CO_2 volume concentration in exhaust, percent (dry)
DHC = HC volume carbon concentration in exhaust, ppmC (dry)
DKNO = NO volume concentration in exhaust, in ppm (dry and humidity corrected)
EIP = engine intake pressure (in. *H* g*A*) = *BARO* − inlet depression
f/a = measured dry fuel-air ratio
G = humidity of the inlet air in grains of water per pound of dry air = (453.59/0.0648) *H*, (see § 86.344)
K = water − gas equilibrium constant = 3.5
K_{NOx} = Humidity correction factor for oxides of nitrogen
K_w = Wet to dry correction factor
M_C = Atomic weight of carbon
$(M_C + M_H)$ = mean molecular weight of the fuel per carbon atom
M_{CO} = Molecular weight of CO
M_F = Mass flow-rate of fuel used in the engine in lb/hr = W_f/453.59
M_H = Atomic weight of hydrogen
$M_{NO}2$ = Molecular weight of nitrogen dioxide (NO_2)
T = Temperature of inlet air (°F)
W_{CO} = Mass rate of CO in exhaust, grams/hr
W_f = Mass flow-rate of fuel used in the engine, in grams/hr = (453.59)×(W_f lbs/hr)
WHC = HC volume concentration in exhaust, ppm *C*(wet)
W_{HC} = Mass rate of HC in exhaust, grams/hr
W_{NOx} = Mass rate of NO_X in exhaust, grams/hr
Y = H_2O volume concentration of intake air (See § 86.344)

(b) Determine the exhaust species volume concentration for each mode.

(c)(1) Convert wet basis measurements to a dry basis by the following:

Dry concentrations = $1/K_W$×wet concentrations. K^W is defined by the equation in Figure D79–6.

(2) For Diesel engines, for each mode use the measured engine (*f/a*) entering the combustion chamber when calculating φ. If applicable bleed air, etc. must be subtracted from the measured air flow (see § 86.313).

(3) For gasoline-fueled engines, optional for Diesel engines, calculate φ for each mode by substituting *WHC* for *DHC* in the (*f/a*) equations in paragraph (d) of this section.

(4) Calculate a *Y* value for each gasoline-fueled engine test from the pretest data. Apply the *Y* value to the K_W equation for the entire test.

(5) Calculate a separate *Y* value for each Diesel test segment from the pretest-segment data. Apply the *Y* value to the K_W equation for the entire test-segment.

$$K_W = \frac{1}{1 + \left[\frac{\alpha\left(\frac{DCO_2}{10^2} + \frac{DCO}{10^6}\right) + \frac{2Y}{\phi}\left(\frac{DCO_2}{10^2} + \frac{DCO}{10^6} + \frac{WHC}{10^6}\right)\left(1 + \frac{\alpha}{4}\right)}{2\left(1 + \frac{\frac{DCO}{10^6}}{\left(\frac{DCO_2}{10^2}\right)K}\right)} \right]}$$

FIGURE D79–6. K_w—WET TO DRY CORRECTION FACTOR

(d) Compute the dry (*f/a*) if required as follows:

$$(f/a) = \frac{4.77(1+\alpha/4)(f/a)\ \text{stoich}}{\frac{1}{\overline{X}} - \left(\frac{DCO}{2\overline{X}(10)^6}\right) - \left(\frac{DHC}{\overline{X}10^6}\right) + \frac{\alpha}{4}\left(1 - \frac{DCO}{\overline{X}(10)^6}\right) - \frac{.75\alpha}{\frac{K}{\frac{DCO}{\overline{X}(10)^6}} + \left(\frac{(1-K)}{1 - \frac{DHC}{\overline{X}(10)^6}}\right)}}$$

Where

$$(f/a)\text{stoich} = \frac{M_C + \alpha M_H}{138.18(1+\alpha/4)}$$

$$\overline{X} = DCO_2/10^2 + DCO/10^6 + DHC/10^6$$

(e) *Data validation*—(1) *Diesel engines only*. Compare the calculated dry (*f/a*) with the measured fuel and air flow. For a valid test the emission calculated (*f/a*) must agree within 10 percent of the measured (*f/a*) for each mode. Diesel engine idle and 2 percent modes do not have to meet this requirement.

(2) *Fuel/Air ratio comparison*. When comparing measured (*f/a*) ratio to an emissions calculated (*f/a*) ratio, the measured air flow (in terms of mass) is the total mass of air entering the exhaust pipe. This may include additions of air mass to the exhaust pipe by an air injection system.

(3) Other methods of data validation may be used if prior approval is obtained from the Administrator.

(4) Data validation techniques that have obtained prior approval from the Administrator for use on gasoline-fueled engines may be used to determine void tests.

(f) Multiply the dry nitric oxide volume concentrations by the following humidity correction factor to obtain *DKNO:*

(1) Gasoline-fueled engines:

$$K_{NOx} + 0.6272 = 0.00629G - 0.0000176G^2$$

(2) Diesel engines:

$$K_{NOx} = \frac{1}{1 + A(G-75) + B(T-85)}$$

where:

$A = 0.044\ (f/a) - 0.0038$
$B = -0.116(f/a) + 0.0053$
T = Temperature of inlet air, °F.

(g) Calculate the mass emissions of each species in grams per hour for each mode as follows:

$$\text{(1)} \qquad \text{HC grams/hr} = W_{\text{HC}} = \frac{(DHC/10^4)W_f}{(DCO/10^4) + DCO_2 + (DHC/10^4)}$$

$$\text{(2)} \qquad \text{CO grams/hr} = W_{\text{CO}} = \frac{M_{\text{CO}}(DCO/10^4)W_f}{(M_C + {}_\alpha M_H)[(DCO/10^4) + DCO_2 + (DHC/10^4)]}$$

$$\text{(3)} \qquad \text{NO}_x \text{ grams/hr} = W_{\text{NO}x} = \frac{M_{NO2}(DKNO/10^4)W_f}{(M_C +_\alpha M_H[(DCO/10^4) + DCO_2 + (DHC/10^4)]}$$

(h)(1) For gasoline-fueled engines, weight the mass values of *BHIP*, W_{HC}, W_{CO}, *Mf*, and W_{NOx} for each mode by multiplying the modal mass values by the appropriate modal weighting factor prescribed by § 86.335.

(2) For Diesel engines, weight the values of *BHP*, W_{HC}, W_{CO}, W_{NOx}, and *Mf* as follows:

(i) Weight the values from each idle mode by multiplying the values by (0.067);

(ii) Weight the remaining modes by multiplying the values by 0.08.

(i) Calculate the brake specific emissions for:

(1) Each gasoline-fueled engine test cycle, and

(2) Each Diesel engine test by summing the weighted values (*BHP*, W_{HC}, W_{CO}, and W_{NOx}) from each mode as follows:

$$BSHC(t) = \frac{\sum \text{weighted } W_{\text{HC}}}{\sum \text{weighted } BHP}$$

$$BSCO(t) = \frac{\sum \text{weighted } W_{\text{CO}}}{\sum \text{weighted } BHP}$$

$$BSNO_x(t) = \frac{\sum \text{weighted } W_{\text{NO}_x}}{\sum \text{weighted } BHP}$$

(t) = Test cycle number (t = 1, 2) (gasoline-fueled engines only).

(j)(1) Calculate the brake-specific fuel consumption (*BSFC*) from the non-weighted *BHP* and *Mf* for each mode. Gasoline-fueled engine idle and *CT* modes, and Diesel idle modes are excluded.

(2) For gasoline-fuel engines use:

$$BSFC = \frac{M_f}{BHP}$$

(3) For Diesel engines use:

$$CBSFC = \frac{M_f}{CBHP}$$

where:

$$CBHP = BHP\left[\frac{29.00}{EIP}\right]\left[\frac{T + 459.69}{85 + 459.69}\right]^{0.7}$$

(4) Other methods of correcting power to determine *BSFC* may be used only with prior approval of the Administrator.

(k) Calculate the weighted brake-specific fuel consumption (*WBSFC*) for

(1) Each gasoline engine test cycle by:

$$WBSFC(t) = \frac{\sum \text{weighted } M_f}{\sum \text{weighted } BHP}$$

where:

t = Test cycle number (t = 1,2)

(2) Each Diesel engine test by:

$$WCBSFC = \frac{\sum \text{weighted } M_f}{\sum \text{weighted } CBHP}$$

(l) For gasoline-fueled engines, calculate the brake-specific emissions and fuel consumption for the complete test as follows:

$BSHC(T) = 0.35\ BSHC(1) = 0.65\ BSHC(2)$

$BSCO(T) = 0.35\ BSCO(1) = 0.65\ BSCO(2)$

$BSNO_x(T) = 0.35\ BSNO_x(1) = 0.65\ BSNO_x(2)$

$WBSFC(T) = 0.35\ WBSFC(1) = 0.65\ WBSFC(2)$

§ 86.346–79 Alternative NO_X measurement technique.

(a) Oxides of nitrogen (NO_X) may be measured with the following ''alternative instrumentation'' for both Diesel and gasoline-fueled engines. The ''alternative instrumentation'' shall consist of:

(1) A heated sample line maintained above the dew point:

(2) An NO_2 to NO converter obtaining a sample directly from the heated sample line; and

(3) A combination per 40 CFR 86.777 or 40 CFR 86.977, whichever is applicable of a water trap, dryer, flow controls, and an NO NDIR analyzer obtaining a sample from the converter.

(b) The provisions of 40 CFR 86 subpart D shall apply to the ''alternative instrumentation'', where applicable, with the following exceptions:

(1) Analyzer specifications found in §§ 86.315, 86.321, and 86.322 do not apply to the ''alternative instrumentation''.

(2) For the purposes of this section, the full-scale value specified in § 86.338 (a)(1) shall be 1,500 ppm for Diesel engines and 2,500 ppm for gasoline-fueled engines.

(c) The ''alternative instrumentation'' shall be calibrated per § 86.330.

(d) The NO NDIR analyzer shall meet the performance and interference specifications contained in 40 CFR 86.777 or 40 CFR 86.977, whichever is applicable.

(e) The operation of the dryer shall follow good engineering practice such that the test results are not altered. Proper preconditioning of the dryer is allowed.

§ 86.347–79 Alternative calculations for diesel engines.

(a) *This section applies to Diesel engines only*. Gasoline-fueled engines must use the calculations in § 86.345.

(b) For Diesel engines, the calculations specified in 40 CFR 86.977–15 may be substituted for § 86.345.

(c) The modal *BSFC* and weighted *BSFC* shall be calculated per § 86.345.

(d) If the provisions of this section are used, a CO_2 measurement is not required.

(e) Both 40 CFR 86.977–15(a) and § 86.313 shall apply to air-flow measurements. For the purposes of this section, the air-flow measurement accuracy specified in § 86.313 shall be ±1 percent.

§ 86.348–79 Alternative to fuel H/C analysis.

(a) Fuel H/C analysis need not be performed if the following average H/C ratios are used for all calculations.

(1) #1B1 Diesel: 1:93

(2) #1B2 Diesel: 1:80

(3) Gasoline: 1.85

(b) [Reserved]

[46 FR 50496, Oct. 13, 1981, and 47 FR 49807, Nov. 2, 1982]

Subpart E—Emission Regulations for 1978 and Later New Motorcycles, General Provisions

SOURCE: 42 FR 1126, Jan. 5, 1977, unless otherwise noted.

§ 86.401–90 General applicability.

(a) This subpart applies to 1978 and later model year, new, gasoline-fueled motorcycles built after December 31, 1977, and to 1990 and later model year, new, methanol-fueled motorcycles built after December 31, 1989.

(b) Motorcycles with engine displacements less than 50 cc (3.1 cu in) are excluded from the requirements of this subpart.

(c) Motorcycles are excluded from the requirements of this subpart, if with an 80 kg (176 lb) driver, it cannot:

(1) Start from a dead stop using only the engine, or

(2) Exceed a maximum speed of 40 km/h (25 mph) on level paved surfaces.

[54 FR 14539, Apr. 11, 1989]

§ 86.401–2006 General applicability.

This subpart applies to 1978 and later model year, new, gasoline-fueled motorcycles built after December 31, 1977, and to 1990 and later model year, new

methanol-fueled motorcycles built after December 31, 1989 and to 1997 and later model year, new natural gas-fueled and liquefied petroleum gas-fueled motorcycles built after December 31, 1996 and to 2006 and later model year new motorcycles, regardless of fuel.

[69 FR 2435, Jan. 15, 2004]

§ 86.401–97 General applicability.

(a) This subpart applies to 1978 and later model year, new, gasoline-fueled motorcycles built after 31 December, 1977, and to 1990 and later model year, new, methanol-fueled motorcycles built after 31 December, 1989 and to 1997 and later model year, new, natural gas-fueled and liquefied petroleum gas-fueled motorcycles built after 31 December, 1996.

(b) Motorcycles with engine displacements less than 50 cc (3.1 cu in) are excluded from the requirements of this subpart.

(c) Motorcycles are excluded from the requirements of this subpart, if with an 80 kg (176 lb) driver, it cannot:

(1) Start from a dead stop using only the engine; or

(2) Exceed a maximum speed of 40 km/h (25 mph) on level paved surfaces.

[59 FR 48512, Sept. 21, 1994]

§ 86.402–78 Definitions.

(a) The definitions in this section apply to this subpart and also to subpart F.

Act means part A of title II of the Clean Air Act, 42 U.S.C. 1857 f–1 through f–7, as amended by Pub. L. 91–604.

Administrator means the Administrator of the Environmental Protection Agency or his authorized representative.

Class, see § 86.419.

Crankcase emissions means airborne substances emitted to the atmosphere from any portion of the engine crankcase ventilation or lubrication systems.

Curb mass means the actual or manufacturer's estimated mass of the vehicle with fluids at nominal capacity and with all equipment specified by the Administrator.

Displacement, and *Displacement Class*, see § 86.419.

Engine family means the basic classification unit of a manufacturer's product line used for the purpose of test fleet selection and determined in accordance with § 86.420.

Engine-displacement-system combination means an engine family-displacement-emission control system combination.

EPA Enforcement Officer means any officer or employee of the Environmental Protection Agency so designated in writing by the Administrator (or by his designee).

Exhaust emissions means substances emitted to the atmosphere from any opening downstream from the exhaust port of a motor vehicle engine.

Fuel system means the combination of fuel tank, fuel pump, fuel lines, oil injection metering system, and carburetor or fuel injection components, and includes all fuel system vents.

Loaded vehicle mass means curb mass plus 80 kg (176 lb.), average driver mass.

Model year means the manufacturer's annual production period (as determined by the Administrator) which includes January first of such calendar year. If the manufacturer has no annual production period, the term *model year* shall mean the calendar year.

Motorcycle means any motor vehicle with a headlight, taillight, and stoplight and having: Two wheels, or Three wheels and a curb mass less than or equal to 680 kilograms (1499 pounds).

Oxides of nitrogen means the sum of the nitric oxide and nitrogen dioxide contained in a gas sample as if the nitric oxide were in the form of nitrogen dioxide.

Scheduled maintenance means any adjustment, repair, removal, disassembly, cleaning, or replacement of vehicle components or systems which is performed on a periodic basis to prevent part failure or vehicle malfunction, or anticipated as necessary to correct an overt indication of vehicle malfunction or failure for which periodic maintenance is not appropriate.

Span gas means a gas of known concentration which is used routinely to set the output level of any analyzer.

System includes any motor vehicle modification which controls or causes the reduction of substances emitted from motor vehicles.

Total test distance is defined for each class of motorcycles in § 86.427–78.

Useful life is defined for each class (see § 86.419) of motorcycle:

Class I—5.0 years or 12,000 km (7,456 miles), whichever first occurs.
Class II—5.0 years or 18,000 km (11,185 miles), whichever first occurs.
Class III—5.0 years or 30,000 km (18,641 miles), whichever first occurs.

Unscheduled maintenance means any inspection, adjustment, repair, removal, disassembly, cleaning, or replacement of vehicle components or systems which is performed to correct or diagnose a part failure or vehicle malfunction which was not anticipated.

Zero kilometers means that point after normal assembly line operations and adjustments, after normal dealer setup and preride inspection operations have been completed, and before 100 kilometers of vehicle operation of three hours of engine operation have been accumulated, including emission testing if performed.

(b) [Reserved]

[42 FR 1126, Jan. 5, 1977, as amended at 42 FR 56737, Oct. 28, 1977; 49 FR 48138, Dec. 10, 1984]

§ 86.402–98 Definitions.

The definitions of § 86.402–78 apply to this subpart. The following definition in this section is applicable beginning with the 1998 model year:

Designated Compliance Officer means the Manager, Engine Programs Group (6405–J), U.S. Environmental Protection Agency, 1200 Pennsylvania Ave., Washington, DC 20460.

Motorcycle means any motor vehicle with a headlight, taillight, and stoplight and having: Two wheels, or Three wheels and a curb mass less than or equal to 793 kilograms (1749 pounds).

Motor vehicle has the meaning we give in 40 CFR 85.1703.

Useful life is defined for each class (see § 86.419) of motorcycle:

(1) Class I-A—5.0 years or 6,000 km (3,728 miles), whichever occurs first.

(2) Class I-B—5.0 years or 12,000 km (7,456 miles), whichever occurs first.

(3) Class II—5.0 years or 18,000 km (11,185 miles), whichever occurs first.

(4) Class III—5.0 years or 30,000 km (18,641 miles), whichever occurs first.

[63 FR 11849, Mar. 11, 1998, as amended at 69 FR 2435, Jan. 15, 2004]

§ 86.403–78 Abbreviations.

The abbreviations used in this subpart have the following meanings in both capital and lowercase:

ASTM—American Society for Testing and Materials.
C—Celsius.
cc—Cubic centimetre(s).
cfh—Cubic feet per hour.
cfm—Cubic feet per minute.
cm—Centimetre(s).
CO—Carbon monoxide.
CO_2—Carbon dioxide.
Conc—Concentration.
cu.—Cubic.
CVS—Constant volume sampler.
EGR—Exhaust gas recirculation.
EP—End point.
EPA—Environmental Protection Agency.
F—Fahrenheit.
h—hour.
HC—Hydrocarbon(s).
Hg—Mercury.
H_2O—Water.
in.—Inch(es).
K—Kelvin.
kg—Kilogram(s).
km—Kilometre(s).
kpa—Kilopascals.
lb—Pound(s).
m—Metre(s).
mph—Miles per hour.
mm—Millimetre(s).
N_2—Nitrogen.
NO_X—Oxides of nitrogen.
No.—Number.
O_2—Oxygen.
Pa—Pascal(s).
Pb—lead.
ppm—Parts per million by volume.
psi—Pounds per square inch.
psig—Pounds per square inch gauge.
R—Rankine.
rpm—Revolutions per minute.
wt—Weight.
°—Degree(s).
%—Percent.

§ 86.404–78 Section numbering.

(a) The year of initial applicability of a section is indicated by its section number. The two digits following the hyphen designate the first model year for which a section is effective. A section remains effective until superseded.

Example: Section 86.411–78 applies to 1978 and subsequent model years until it is superseded. If a § 86.411–81 is promulgated it would take effect beginning with 1981; § 86.411–78 would apply to years 1978 through 1980.

(b) A reference to a section without a year designation implies the appropriate model year.

Example: When considering 1979 vehicles a reference to § 86.411 implies § 86.411–79. However if no § 86.411–79 has been promulgated then § 86.411–78 is implied; See paragraph (a) of this section.

§ 86.405–78 Measurement system.

(a) This subpart and subpart F have been written using System International (SI) units. SI units will be used to determine compliance with these regulations. English equivalents have been indicated solely for the user's convenience.

(b) [Reserved]

§ 86.406–78 Introduction, structure of subpart, further information.

(a) This subpart contains general provisions regulating the emission of air pollution from new motorcycles. Test procedures are found in subpart F.

(b) Several discrete concepts are addressed:

(1) *Requirements*. Sections 86.407 to 86.415.

(2) *Application for certification*. Sections 86.416 and 86.417.

(3) *Test fleet selection*. Sections 86.418 to 86.423.

(4) *Service accumulation, testing, maintenance, certification*. Sections 86.424 to 86.439.

(5) *Administrative provisions*. Sections 86.440 to 86.444.

(c) The certification procedure to be followed depends upon the manufacturer's projected sales.

(1) New motorcycles, produced by a manufacturer whose projected U.S. sales of motorcycles is 10,000 or more units (for the model year in which certification is sought) shall demonstrate compliance with all general standards and all specific emission requirements before they can be sold in the United States. The manufacturer is required to submit an application with sales data, product information, required maintenance, testing and service accumulation procedures. The Administrator will select vehicle(s) which will represent the manufacturer's product line. The manufacturer is required to construct these vehicles to be representative of actual production. Service is accumulated and emission tests performed with data submitted to the Administrator. The Administrator may run his own tests to confirm the manufacturer's results. The Administrator will review the data and either grant or deny certification. If the manufacturer wishes to make changes to a certified vehicle, or to produce a new vehicle, the Administrator must be notified. The Administrator may require testing to demonstrate continued compliance with emission standards. Each vehicle must be labeled with tune up specifications and the purchaser must be supplied with maintenance instructions. Also, information on production vehicles must be supplied to the Administrator.

(2) New motorcycles produced by a manufacturer whose projected U.S. sales of motorcycles is less than 10,000 units (for the model year in which certification is sought) shall meet both the general standards and specific emission requirements described in §§ 86.401 through 86.417, § 86.425, § 86.437, and §§ 86.440 through 86.444 of this subpart before they can be sold in the United States. The manufacturer is required to submit an application containing a statement that his vehicles conform to the applicable emission standards. The manufacturer is required to retain in his records, but not submit with the application, valid emission test data which support his statement. The Administrator will review the application and either grant or deny certification. Each vehicle must be labeled with tune up specifications and the purchaser must be supplied with maintenance instructions. Also, information on production vehicles must be supplied to the Administrator.

(d) Manufacturers who are considering an application should contact: Director, Vehicle Programs and Compliance Division, Environmental Protection Agency, 2565 Plymouth Rd., Ann Arbor, Michigan 48105 and state whether he/she plans to certify for total sales of greater than or less than

10,000 vehicles for the applicable model year.

[42 FR 1126, Jan. 5, 1977, as amended at 63 FR 11849, Mar. 11, 1998]

§ 86.407–78 Certificate of conformity required.

(a) *General requirement.* Every new motorcycle manufactured for sale, sold, offered for sale, introduced or delivered for introduction into commerce, or imported into the United States which is subject to any of the standards prescribed in this subpart is required to be covered by a certificate of conformity issued pursuant to this subpart, except as specified in paragraph (b) of this section, or otherwise exempted from this requirement.

(b) *Interim personal use exemption.* An individual may manufacture one motorcycle for personal use without a certificate of conformity, subject to the following provisions:

(1) The motorcycle may not be manufactured from a certified motorcycle. The motorcycle may not be manufactured from a partially complete motorcycle that is equivalent to a certified motorcycle, unless the emission controls are included in the final product. The motorcycle must be manufactured primarily from unassembled components, but may incorporate some preassembled components. For example, fully preassembled transmissions may be used.

(2) The motorcycle may not be sold within five years of the date of final assembly.

(3) No individual may manufacture more than one motorcycle during his or her lifetime under this exemption. This restriction applies with respect to the person who purchases the components and/or uses the motorcycle, rather than to the person(s) who actually assemble(s) the motorcycle.

(4) This exemption may not be used to circumvent the requirements of paragraph (a) of this section or the requirements of the Clean Air Act. For example, this exemption would not cover a case in which an entity purchases a kit, assembles the kit, and then sells it to another party; this would be considered to be the sale of the complete motorcycle.

(c) *Interim display exemptions.* Uncertified custom motorcycles that are used solely for display purposes are exempt from the standards provided they conform to the requirements of this paragraph (c). Unless a certificate of conformity has been received for such motorcycles, they may not be operated on the public streets or highways except for that operation incident and necessary to the display purpose.

(1) No request is necessary for display motorcycles that will not be sold or leased.

(2) The following requirements apply for exempting display motorcycles that will be sold or leased:

(i) Manufacturers planning to sell motorcycles for display must notify EPA of their intent to do so before they sell any exempted motorcycles. They must also maintain sales records of exempted motorcycles for at least three years and make them available to EPA upon request.

(ii) No manufacturer may sell or lease more than 24 exempted display motorcycles in any single calendar year.

(iii) Anyone selling or leasing a motorcycle exempt under this paragraph (c) must ensure that the buyer or lessee agrees to comply with the display exemption terms in the regulations.

(3) Each motorcycle exempt under this paragraph (c) must include a label that identifies the manufacturer and includes the following statement: THIS MOTORCYCLE IS EXEMPT FROM EPA EMISSION REQUIREMENTS. ITS USE ON PUBLIC ROADS IS LIMITED PURSUANT TO 40 CFR 86.407–78(c). EPA may allow manufacturers to locate the label in a location where it is obscured or hidden by a readily removable component. For example, EPA may allow the label to be located under the seat.

(4) As described in 40 CFR part 1051, motorcycles that are not considered to be motor vehicles according to 40 CFR 85.1703(a) may be exempt under this paragraph (c) from the standards and requirements of 40 CFR part 1051. Such motorcycles shall be combined with the manufacturer's highway motorcycles with respect to the sales restriction described in paragraph (c)(2)(ii) of this section.

(5) This exemption may not be used to circumvent the requirements of paragraph (a) of this section or the requirements of the Clean Air Act.

[69 FR 2435, Jan. 15, 2004]

§ 86.408–78 General standards; increase in emissions; unsafe conditions.

(a) Any system installed on or incorporated in a new motorcycle to enable such vehicle to conform to standards imposed by this subpart:

(1) Shall not in its operation or function cause the emission into the ambient air of any noxious or toxic substance that would not be emitted in the operation of such vehicle without such system, except as specifically permitted by regulation; and

(2) Shall not in its operation, function, or malfunction result in any unsafe condition endangering the motorcycle, its rider(s), or persons or property in close proximity to the vehicle.

(b) Every manufacturer of new motorcycles subject to any of the standards imposed by this subpart shall, prior to taking any of the actions specified in section 203(a)(1) of the Act, test or cause to be tested motorcycles in accordance with good engineering practice to ascertain that such test vehicles will meet the requirements of this section for the useful life of the vehicle.

§ 86.409–78 Defeat devices, prohibition.

(a) No motorcycle shall be equipped with a defeat device.

(b) Defeat device means any element of design which:

(1) Senses temperature, vehicle speed, engine RPM, transmission gear, manifold vacuum, or any other parameter for the purpose of activating, modulating, delaying or deactivating the operation of any part of the emission control system and

(2) Reduces the effectiveness of the emission control system under conditions which may reasonably be expected to be encountered in normal urban vehicle operation and use, unless

(i) Such conditions are substantially included in the Federal emission test procedure, or

(ii) The need for the device is justified in terms of protecting the vehicle against damage or accident, or

(iii) The device does not go beyond the requirements of engine starting or warm-up.

§ 86.410–80 Emission standards for 1980 and later model year motorcycles.

(a)(1) Exhaust emissions from 1980 and later model year motorcycles shall not exceed:

(i) *Hydrocarbons.* 5.0 grams per vehicle kilometre.

(ii) *Carbon monoxide.* 12 grams per vehicle kilometre.

(2) The standards set forth in paragraph (a)(1) of this section refer to the exhaust emitted over driving schedules as set forth in subpart F and measured and calculated in accordance with those procedures.

(b) No crankcase emissions shall be discharged into the ambient atmosphere from any new motorcycle subject to this subpart.

[42 FR 1126, Jan. 5, 1977, as amended at 49 FR 48138, Dec. 10, 1984]

§ 86.410–90 Emission standards for 1990 and later model year motorcycles.

(a)(1) Exhaust emissions from 1990 and later model year gasoline-fueled, natural gas-fueled and liquefied petroleum gas-fueled motorcycles shall not exceed (compliance with these standards is optional prior to the 1997 model year for natural gas-fueled and liquefied petroleum gas-fueled motorcycles):

(i) *Hydrocarbons.* 5.0 grams per vehicle kilometer.

(ii) *Carbon monoxide.* 12 grams per vehicle kilometer.

(2) Exhaust emissions from 1990 and later model year methanol-fueled motorcycles shall not exceed:

(i) *Total hydrocarbon equivalent.* 5.0 grams per vehicle kilometer.

(ii) *Carbon monoxide.* 12 grams per vehicle kilometer.

(3) The standards set forth in paragraphs (a) (1) and (2) of this section refer to the exhaust emitted over driving schedule as set forth in subpart F and measured and calculated in accordance with those procedures.

(b) No crankcase emissions shall be discharged into the ambient atmosphere from any new motorcycle subject to this subpart.

[54 FR 14539, Apr. 11, 1989, as amended at 59 FR 48512, Sept. 21, 1994]

§ 86.410–2006 Emission standards for 2006 and later model year motorcycles.

(a)(1) Exhaust emissions from Class I and Class II motorcycles shall not exceed the standards listed in the following table:

TABLE E2006–1—CLASS I AND II MOTORCYCLE EMISSION STANDARDS

Model year	Emission standards (g/km)	
	HC	CO
2006 and later	1.0	12.0

(2) Exhaust emissions from Class III motorcycles shall not exceed the standards listed in the following table:

TABLE E2006–2—CLASS III MOTORCYCLE EMISSION STANDARDS

Tier	Model year	Emission standards (g/km)	
		$HC + NO_X$	CO
Tier 1	2006–2009	1.4	12.0
Tier 2	2010 and later	0.8	12.0

(b) The standards set forth in paragraphs (a) (1) and (2) of this section refer to the exhaust emitted over the driving schedule as set forth in subpart F and measured and calculated in accordance with those procedures.

(c) Compliance with the $HC+NO_X$ standards set forth in paragraph (a)(2) of this section may be demonstrated using the averaging provisions of § 86.449.

(d) No crankcase emissions shall be discharged into the ambient atmosphere from any new motorcycle subject to this subpart.

(e) Manufacturers with fewer than 500 employees worldwide and producing fewer than 3,000 motorcycles per year in the United States are considered small-volume manufacturers for the purposes of this section. The following provisions apply for these small-volume manufacturers:

(1) Small-volume manufacturers are not required to comply with the Tier 1 standards applicable to Class III motorcycles until model year 2008.

(2) Small-volume manufacturers are not required to comply with the Tier 2 standards applicable to Class III motorcycles.

(3) Small-volume manufacturers are not required to comply with permeation requirements in paragraph (g) of this section until model year 2010.

(f) Manufacturers may choose to certify their Class I and Class II motorcycles to an $HC + NO_X$ standard of 1.4 g/km instead of the 1.0 g/km HC standard listed in paragraph (a)(1) of this section. Engine families certified to this standard may demonstrate compliance using the averaging provisions of § 86.449.

(g) Model year 2008 and later motorcycles must comply with the evaporative emission standards described in 40 CFR 1051.110. Manufacturers may show compliance using the design-based certification procedures described in 40 CFR 1051.245. Manufacturers may comply with the tank permeation standards using the averaging provisions in 40 CFR part 1051, subpart H, but may not include any motorcycles equipped with metal fuel tanks in their average emission level. Manufacturers may not average between highway motorcycle engine families and recreational vehicle families.

[69 FR 2436, Jan. 15, 2004, as amended at 70 FR 40434, July 13, 2005]

§ 86.411–78 Maintenance instructions, vehicle purchaser.

(a) The manufacturer shall furnish or cause to be furnished to the ultimate purchaser of each new motorcycle the written instructions for the periodic and anticipated maintenance and use of the vehicle by the ultimate purchaser as may be reasonable and necessary to assure the proper functioning of emission control systems for the vehicle's useful life.

(1) Such instructions shall be provided for those vehicle and engine components listed in appendix VI to this part (and for any other components) to the extent that maintenance of these components is necessary to assure the

proper functioning of emission control systems.

(2) Such instructions shall be in the English language and in clear, and to the extent practicable, nontechnical language.

(b) The maintenance instructions required by this section shall:

(1) Contain a general description of the documentation which the manufacturer will require from the ultimate purchaser or any subsequent purchaser as evidence of compliance with the instructions, and

(2) Specify the performance of all scheduled maintenance performed by the manufacturer under § 86.428.

§ 86.412–78 Maintenance instructions, submission to Administrator.

(a) *Instructions for ultimate purchaser.* (1) The manufacturer shall provide to the Administrator, at least 30 days before being supplied to the ultimate purchaser (unless the Administrator consents to a lesser period of time), a copy of the maintenance instructions which the manufacturer proposes to supply to the ultimate purchaser. The instructions must include the periodic and anticipated maintenance contained in the application for certification or contained in the manufacturers' records (if anticipated sales are less than 10,000 units). Such instructions must be reasonable and necessary to assure the proper functioning of the vehicle's emission control systems.

(2) Any revision to the maintenance instructions which will affect emissions shall be supplied to the Administrator at least 30 days before being supplied to the ultimate purchaser unless the Administrator consents to a lesser period of time.

(b) *Other instructions.* The manufacturer of any new motorcycle subject to any of the standards prescribed in this subpart shall submit to the Administrator at the time of issuance by the manufacturer, copies of all sales brochures, instructions, or explanations regarding the use, repair, adjustment, maintenance, or testing of such vehicle relevant to the control of crankcase or exhaust emissions, issued by the manufacturer for use by other manufacturers, assembly plants, distributors, dealers, repair facilities, and ultimate purchasers. Any material not translated into the English language need not be submitted unless specifically requested by the Administrator.

§ 86.413–78 Labeling.

(a)(1) The manufacturer of any motorcycle shall, at the time of manufacture, affix a permanent, legible label, of the type and in the manner described below, containing the information hereinafter provided, to all production models of such vehicles available for sale to the public and covered by a certificate of conformity.

(2) A permanent, legible label shall be affixed in a readily accessible position. Multi-part labels may be used.

(3) The label shall be affixed by the vehicle manufacturer who has been issued the certificate of conformity for such vehicle, in such a manner that it cannot be removed without destroying or defacing the label.

(4) The label shall contain the following information lettered in the English language in block letters and numerals, which shall be of a color that contrasts with the background of the label:

(i) *The label heading.* Vehicle Emission Control Information;

(ii) Full corporate name and trademark of the manufacturer;

(iii) Engine displacement (in cubic centimetres) and engine family identification;

(iv) Engine tuneup specifications and adjustments, as recommended by the manufacturer, including idle speed, ignition timing, and the idle air-fuel mixture setting procedure and value (e.g., idle CO, idle air-fuel ratio, idle speed drop). These specifications shall indicate the proper transmission position during tuneup;

(v) Any specific fuel or engine lubricant requirements (e.g., lead content, Research octane number, engine lubricant type);

(vi) An unconditional statement of conformity to USEPA regulations which includes the model year; for example, This Vehicle Conforms to USEPA Regulation Applicable to ..... Model Year New Motorcycles.

(b) The provisions of this section shall not prevent a manufacturer from

also reciting on the label that such vehicle conforms to any other applicable Federal or State standards for new motorcycles or any other information that such manufacturer deems necessary for, or useful to, the proper operation and satisfactory maintenance of the vehicle.

[42 FR 1126, Jan. 5, 1977, as amended at 42 FR 56737, Oct. 28, 1977]

§ 86.413–2006 Labeling.

(a)(1) The manufacturer of any motorcycle shall, at the time of manufacture, affix a permanent, legible label, of the type and in the manner described in this section, containing the information provided in this section, to all production models of such vehicles available for sale to the public and covered by a certificate of conformity.

(2) A permanent, legible label shall be affixed in a readily accessible position. Multi-part labels may be used.

(3) The label shall be affixed by the vehicle manufacturer who has been issued the certificate of conformity for such vehicle, in such a manner that it cannot be removed without destroying or defacing the label, and shall not be affixed to any part which is easily detached from the vehicle or is likely to be replaced during the useful life of the vehicle.

(4) The label shall contain the following information lettered in the English language in block letters and numerals, which shall be of a color that contrasts with the background of the label:

(i) The label heading shall read: ''Vehicle Emission Control

Information'';

(ii) Full corporate name and trademark of the manufacturer;

(iii) Engine displacement (in cubic centimeters or liters) and engine family identification;

(iv) Engine tuneup specifications and adjustments, as recommended by the manufacturer, including, if applicable: idle speed, ignition timing, and the idle air-fuel mixture setting procedure and value (*e.g.*, idle CO, idle air-fuel ratio, idle speed drop). These specifications shall indicate the proper transmission position during tuneup, and which accessories should be in operation and which systems should be disconnected during a tuneup;

(v) Any specific fuel or engine lubricant requirements (*e.g.*, lead content, research octane number, engine lubricant type);

(vi) Identification of the exhaust emission control system, using abbreviations in accordance with SAE J1930, June 1993, including the following abbreviations for items commonly appearing on motorcycles:

OC Oxidation catalyst;
TWC Three-way catalyst;
AIR Secondary air injection (pump);
PAIR Pulsed secondary air injection;
DFI Direct fuel injection;
O2S Oxygen sensor;
HO2S Heated oxygen sensor;
EM Engine modification;
CFI Continuous fuel injection;
MFI Multi-port (electronic) fuel injection; and
TBI Throttle body (electronic) fuel injection.

(viii) An unconditional statement of conformity to U.S. EPA regulations which includes the model year; for example, ''This Vehicle Conforms to U.S. EPA Regulations Applicable to___Model Year New Motorcycles'' (the blank is to be filled in with the appropriate model year). For all Class III motorcycles and for Class I and Class II motorcycles demonstrating compliance with the averaging provisions in 40 CFR 86.449 the statement must also include the phrase ''is certified to an $HC+NO_X$ emission standard of ___ grams/kilometer'' (the blank is to be filled in with the Family Emission Limit determined by the manufacturer).

(b) The provisions of this section shall not prevent a manufacturer from also reciting on the label that such vehicle conforms to any other applicable Federal or State standards for new motorcycles or any other information that such manufacturer deems necessary for, or useful to, the proper operation and satisfactory maintenance of the vehicle.

[70 FR 40434, July 13, 2005]

§ 86.414–78 Submission of vehicle identification number.

(a) Upon request by the Administrator, the manufacturer of any motorcycle covered by a certificate of conformity shall, within 30 days, identify by vehicle identification number, the vehicle(s) covered by the certificate of conformity.

(b) The manufacturer of any motorcycle covered by a certificate of conformity shall furnish to the Administrator, at the beginning of each model year, any vehicle identification number coding system which identifies whether such vehicle(s) are covered by a certificate of conformity.

§ 86.415–78 Production vehicles.

(a) Any manufacturer obtaining certification shall supply to the Administrator, upon his request, a reasonable number of production vehicles selected by the Administrator which are representative of the engines, emission control systems, fuel systems, and transmissions offered and typical of production models available for sale under the certificate. These vehicles shall be supplied for testing at such time and place and for such reasonable periods as the Administrator may require.

(b) Any manufacturer obtaining certification shall notify the Administrator, on a yearly basis, of the number of vehicles of each engine family—engine displacement—emission control system—fuel system—transmission type—inertial mass category combination produced for sale in the United States during the preceding year.

(c) All motorcycles covered by a certificate of conformity shall prior to delivery to the ultimate purchaser be adjusted, by the manufacturer or his agent, to the ignition timing specification detailed in § 86.413.

[42 FR 1126, Jan. 5, 1977, as amended at 49 FR 48138, Dec. 10, 1984]

§ 86.416–80 Application for certification.

(a) New motorcycles produced by a manufacturer whose projected sales in the United States is 10,000 or more units (for the model year in which certification if sought) are covered by the following:

(1) An application for a certificate of conformity to the regulations in the English language applicable to new motorcycles shall be made to the Administrator by the manufacturer and shall be updated and corrected by amendment. Where possible, a manufacturer should include in a single application for certification, a description of all vehicles in each class for which certification is required. A manufacturer may, however, choose to apply separately for certification of part of his product line. The selection of test vehicles and the computation of test results will be determined separately for each application.

(2) The application shall be in writing signed by an authorized representative of the manufacturer, and shall include the following:

(i) Identification and description of the vehicles covered by the application and a description of their engine, emission control system and fuel system components. This shall include a detailed description of each auxiliary emission control device. Transmission gear ratios, overall drive ratios and vehicle mass (or range of mass) shall also be included. The label and its location shall be specified, § 86.413. Available optional equipment shall be described.

(ii) The range of available fuel and ignition system adjustments.

(iii) Projected U.S. sales data sufficient to enable the Administrator to select a test fleet representative of the vehicles for which certification is requested. If reduced testing based on low sales volume is requested the method of predicting sales shall be described.

(iv) A description of the test equipment (if applicable) and fuel and engine lubricant proposed to be used.

(v) A description of the proposed service accumulation procedure and a description of the proposed scheduled maintenance.

(vi) A statement of recommended periodic and anticipated maintenance and procedures necessary to assure that the vehicles covered by a certificate of conformity in operation conform to the regulations, listings of the

fuels and lubricants to be recommended to the ultimate purchaser and a description of the program for training of personnel for such maintenance, and the equipment required to perform this maintenance.

(vii) A description of normal assembly line operations and adjustments if such procedures exceed 100 km (62 miles) or three hours of engine operations.

(viii) Beginning with model year 2008, a description of the evaporative emission controls and applicable test data.

(3) Completed copies of the application and of any amendments thereto, and all notifications under §§ 86.438 and 86.439 shall be submitted in such multiple copies as the Administrator may require.

(4) For purposes of this section, ''auxiliary emission control device'' means any element of design which senses temperature, vehicle speed, engine RPM, transmission gear, manifold vacuum, or any other parameter for the purpose of activating, modulating, delaying, or deactivating the operation of any part of the emission control system.

(b) New motorcycles produced by a small-volume manufacturer (as defined in § 86.410(e)) or by any other manufacturer whose projected sales in the United States is less than 10,000 units (for the model year in which certification is sought) are covered by the following:

(1) All the information that would otherwise be required to be submitted to EPA under paragraph (a)(2) of this section must be made a part of the manufacturer's records, except there is no requirement to submit the information to the Administrator or receive approval from the Administrator.

(2) Section 86.437 details the statements that these manufacturers are required to provide to the Administrator.

(c) For the purpose of determining applicability of paragraphs (a) or (b) of this section, where there is more than one importer or distributor of vehicles manufactured by the same person, the projected sales shall be the aggregate of the projected sales of those vehicles by such importers or distributors.

(d)(1) The Administrator has determined that the following certification procedure may be used to demonstrate compliance for each motorcycle engine family for which certification is sought. Manufacturers may follow these procedures at their option.

(i) The manufacturer shall satisfy all applicable requirements of part 86 necessary to demonstrate compliance with the standards for each class of new motorcycles for which certification is sought.

(ii) As specifically allowed by the Administrator the manufacturer shall assume the responsibility for part or all of the decisions applicable to the family for which certification is sought and which are within the jurisdiction of the Administrator, with the exception that the Administrator will determine whether a test motorcycle has met the applicable emission standards.

(iii) The manufacturer shall maintain, update, and correct all records and information required.

(iv) The Administrator may review a manufacturer's records at any time. At the Administrator's discretion, this review may take place either at the manufacturer's facility or at another facility designated by the Administrator.

(v) At the Administrator's request, the manufacturer shall notify the Administrator of the status of the certification program including projected schedules of those significant accomplishments specified by the Administrator.

(vi) The manufacturer shall permit the Administrator to inspect any facilities, records, and vehicles from which data were obtained under the abbreviated certification review procedure.

(vii) Upon completing all applicable requirements of part 86 the manufacturer shall submit a separate application for a certificate of conformity for each class of new motorcycles for which certification is sought. Such application shall be made in writing to the Administrator by the manufacturer.

(A) The Administrator may approve or disapprove in whole or in part an application for certification according to the procedures specified in § 86.417–78(b).

(B) If, after a review of the application for certification, test reports and

data submitted by the manufacturer, data obtained during an inspection, and any other pertinent data or information, the Administrator determines that a test vehicle(s) has not met the requirements of the Act and the applicable subpart, he will notify the manufacturer in writing and set forth the reason(s) for the determination.

(2) Those families which are not following the procedure described in paragraph (d)(1) of this section will follow the procedure in this subpart with the exception of paragraph (d)(1) of this section.

(e) The Administrator may require that an engine family previously allowed to be subjected to the abbreviated certification review procedure be transferred to the complete review procedure.

(f) Upon request, the Administrator may allow a manufacturer to use alternate certification procedures that are equivalent in terms of demonstrating compliance with the requirements of this part.

[42 FR 56737, Oct. 28, 1977, as amended at 45 FR 26045, Apr. 17, 1980; 49 FR 48138, Dec. 10, 1984; 69 FR 2436, Jan. 15, 2004]

§ 86.417–78 Approval of application for certification.

(a) After a review of the application for certification and any other information which the Administrator may require, the Administrator may approve the application and select a test fleet as appropriate.

(b) The Administrator may disapprove in whole or in part an application for certification for reasons including incompleteness, inaccuracy, inappropriate proposed distance accumulation procedures, maintenance, test equipment, label content or location, fuel or lubricant, and incorporation of defeat devices in vehicles described by the application. Where any part of an application is rejected the Administrator shall notify the manufacturer in writing and set forth the reasons for such rejection. The manufacturer may request a hearing under § 86.443.

§ 86.418–78 Test fleet selection.

(a) Test fleet selection and requirements on test vehicles are found in §§ 86.419 to 86.423. This selection process is also graphically depicted in Figure E78–1.

Figure E78-1 Selection Process

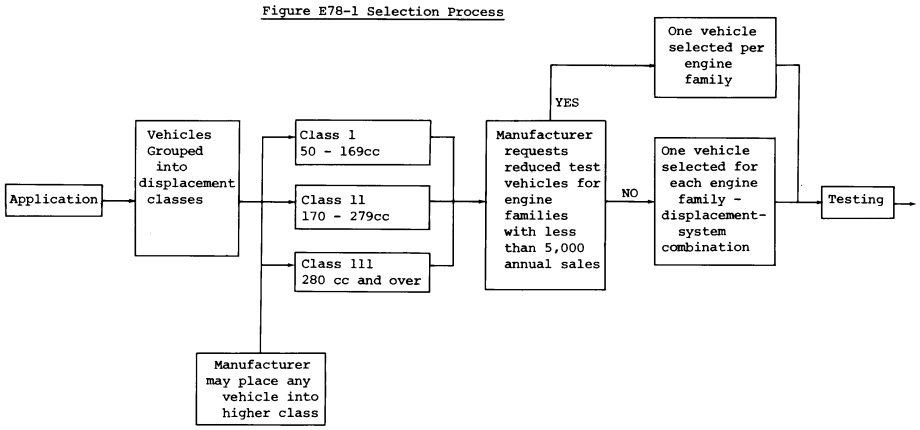

(b) [Reserved]

§ 86.419–78 Engine displacement, motorcycle classes.

(a)(1) Engine displacement shall be calculated using nominal engine values and rounded to the nearest whole cubic centimetre, in accordance with ASTM E 29–67.

(2) For rotary engines, displacement means the maximum volume of a combustion chamber between two rotor tip

seals minus the minimum volume of that combustion chamber between those two rotor tip seals times three times the number of rotors.

cc=(max. chamber volume − min. chamber volume) × 3 × no. of rotors

(b) Motorcycles will be divided into classes based on engine displacement.

(1) Class I—50 to 169 cc (3.1 to 10.4 cu. in.).

(2) Class II—170 to 279 cc (10.4 to 17.1 cu. in.).

(3) Class III—280 cc and over (17.1 cu. in. and over).

(c) At the manufacturer's option, a vehicle described in an application for certification may be placed in a higher class (larger displacement). All procedures for the higher class must then be complied with, compliance with emission standards will be determined on the basis of engine displacement.

§ 86.419–2006 Engine displacement, motorcycle classes.

(a)(1) Engine displacement shall be calculated using nominal engine values and rounded to the nearest whole cubic centimeter, in accordance with ASTM E 29–93a (incorporated by reference in § 86.1).

(2) For rotary engines, displacement means the maximum volume of a combustion chamber between two rotor tip seals, minus the minimum volume of the combustion chamber between those two rotor tip seals, times three times the number of rotors, according to the following formula:

cc = (max. chamber volume − min. chamber volume) × 3 × no. of rotors

(b) Motorcycles will be divided into classes based on engine displacement.

(1) Class I—0 to 169 cc (0 to 10.4 cu. in.).

(i) Class I motorcycles with engine displacement less than 50 cc comprise the Class I-A subclass.

(ii) Class I motorcycles with engine displacement 50 cc or higher comprise the Class I-B subclass.

(2) Class II—170 to 279 cc (10.4 to 17.1 cu. in.).

(3) Class III—280 cc and over (17.1 cu. in. and over).

(c) At the manufacturer's option, a vehicle described in an application for certification may be placed in a higher class (larger displacement). All procedures for the higher class must then be complied with and compliance with emission standards will be determined on the basis of engine displacement.

[69 FR 2437, Jan. 15, 2004]

§ 86.420–78 Engine families.

(a) The vehicles covered in the application will be divided into groupings whose engines are expected to have similar emission characteristics throughout their useful life. Each group of engines with similar emission characteristics shall be defined as a separate engine family.

(b) *Reciprocating families*. To be classed in the same engine family, reciprocating engines must be identical in all of the following applicable respects:

(1) The combustion cycle.

(2) The cooling mechanism.

(3) The cylinder configuration (inline, vee, opposed, bore spacings, etc.).

(4) The number of cylinders.

(5) The engine displacement class, § 86.419.

(6) The method of air aspiration.

(7) The number of catalytic converters, location, volume, and composition.

(8) The thermal reactor characteristics.

(9) The number of carburetors.

(10) The prechamber characteristics.

(c) At the manufacturer's option, reciprocating engines identical in all the respects listed in paragraph (b) of this section may be further divided into different engine families if the Administrator determines that they may be expected to have different emission characteristics. This determination will be based upon a consideration of features such as:

(1) The bore and stroke.

(2) The combustion chamber configuration.

(3) The intake and exhaust timing method of actuation (poppet valve, reed valve, rotary valve, etc.).

(4) The intake and exhaust valve or port sizes, as applicable.

(5) The fuel system.

(6) The exhaust system.

(d) *Rotary families.* To be classed in the same engine family, rotary combustion cycle engines must be identical in all of the following applicable respects:

(1) The major axis of the epitrochoidal curve.

(2) The minor axis of the epitrochoidal curve.

(3) The generating radius of the epitrochoidal curve.

(4) The cooling mechanism.

(5) The number of rotors.

(6) The engine displacement class, § 86.419.

(7) The method of air aspiration.

(8) The number of catalytic converters, location, volume and composition.

(9) The thermal reactor characteristics.

(10) The number of carburetors.

(11) The prechamber characteristics.

(e) At the manufacturer's option, rotary combustion cycle engines identical in all the respects listed in paragraph (d) of this section, may be further divided into different engine families if the Administrator determines that they may be expected to have different emission characteristics. This determination will be based upon a consideration of features, such as:

(1) The width of the rotor housing.

(2) The type and location of intake port (side, peripheral, combination, etc.).

(3) The number of spark plugs per rotor.

(4) The fuel system.

(5) The exhaust system.

(f) Where engines are of a type which cannot be divided into engine families based upon the criteria listed in paragraphs (b) and (d) of this section, the Administrator will establish families of those engines based upon the features most related to their emission characteristics.

[42 FR 1126, Jan. 5, 1977, as amended at 44 FR 48205, Aug. 17, 1979]

§ 86.421–78 Test fleet.

(a) A test vehicle will be selected by the Administrator to represent each engine-displacement-system combination. The configuration (engine calibration, transmission, drive ratio, mass, options, etc.) in the manufacturer's application which the Administrator believes has the greatest probability of exceeding the standards will be selected.

(b) At the manufacturer's option, the Administrator will only select one vehicle to represent each engine family where the total projected annual sales for that family are less than 5,000 vehicles.

(c) A manufacturer may elect to operate and test additional vehicles which are identical to those selected by the Administrator. Written notice of a commitment to operate and test additional vehicles shall be given to the Administrator prior to the start of testing and not later than 30 days following notification of the test fleet selection. The results of tests performed by the manufacturer will be combined to determine deterioration factors. Each vehicle must meet applicable standards when tested by the Administrator and when those results are projected to the useful life.

(d) In lieu of testing a test vehicle and submitting data therefore, a manufacturer may, with the prior written approval of the Administrator, submit exhaust emission data on a similar vehicle for which certification has previously been obtained or for which all applicable data has previously been submitted.

§ 86.422–78 Administrator's fleet.

The Administrator may require additional test vehicles identical in all material respects to vehicles selected in accordance with § 86.421. The number of vehicles selected shall not increase the size of the test fleet by more than 20 percent or one vehicle, whichever is greater.

§ 86.423–78 Test vehicles.

(a)(1) Before beginning service accumulation on a test vehicle, the manufacturer may perform a zero-kilometer exhaust emission test.

(2) If such a test is performed, the data shall be submitted to the Administrator when the application is submitted.

(3) Zero-kilometer test results shall not be included in the determination of deterioration factors.

(b) Once a manufacturer begins to operate a test vehicle, as indicated by compliance with paragraph (a) of this section, the data from the vehicle will be used, unless specified otherwise by the Administrator. Discontinuation of a vehicle shall be allowed only with the written consent of the Administrator.

(c) Test vehicles shall be calibrated at zero kilometres within the production tolerances applicable to the manufacturer's specifications.

(d) The Administrator may disqualify a vehicle which receives assembly line operations and adjustments which will not be performed on production vehicles.

[42 FR 1126, Jan. 5, 1977, as amended at 49 FR 48138, Dec. 10, 1984]

§ 86.425–78 Test procedures.

(a) Motorcycle emission test procedures are found in subpart F.

(b) The Administrator may prescribe emission test procedures for any motorcycle which he determines is not susceptible to satisfactory testing by the procedures set forth in subpart F.

(c) Testing of any type with respect to any test vehicle other than that specified in this subpart and subpart F is not allowed except as specifically authorized by the Administrator.

§ 86.426–78 Service accumulation.

(a) The procedure for service accumulation will be the Durability Driving Schedule as specified in appendix IV to this part. A modified procedure may also be used if approved in advance by the Administrator. Except with the advance approval of the Administrator, all vehicles will accumulate distance at a measured curb mass which is within 5 kg (11.0 lb) of the loaded vehicle mass specified by the Administrator.

(b) During service accumulation, vehicles shall not be operated for more than 12 hours during an operating sequence. Engine shutdowns are permitted during the operating sequence, but the periods of shutdown are not included in the 12 hour total. Following each operating sequence, the vehicle shall soak, without operation, for a minimum of 8 hours. During soak periods, the vehicle shall be exposed to normal outside ambient temperatures and humidity conditions unless vehicle maintenance or servicing is being performed.

(c) The manufacturer's recommended shifting procedure will be used for laps 1 through 10. Lap 11 shifts (W.O.T. accelerations) must be conducted at the manufacturer's recommended maximum safe engine speed.

[42 FR 1126, Jan. 5, 1977, as amended at 42 FR 56737, Oct. 28, 1977]

§ 86.427–78 Emission tests.

(a)(1) Each test vehicle shall be driven with all emission control systems installed and operating for the following total test distances, or for such lesser distances as the Administrator may agree to as meeting the objectives of this procedure. (See § 86.419 for class explanation.)

Displacement class	Total test distance (kilometers)	Minimum test distance (kilometers)	Minimum number of tests
I	6,000	2,500	4
II	9,000	2,500	4
III	15,000	3,500	4

(2) A zero kilometer emission test may be performed prior to the beginning of service accumulation.

(b) All vehicles shall undergo at least four emission tests; one at the minimum test distance, one before and one after periodic maintenance, and one at the total test distance. If no maintenance is scheduled, then at least two tests will be performed, at equal intervals, between the minimum and total test distances. Additional tests may be performed; such tests must be at equal intervals and approved by the Administrator prior to starting service accumulation.

(c) Where the Administrator agrees to a lesser distance for service accumulation, he may modify the maintenance provisions of this subpart.

(d) All tests required by this subpart must be conducted at an accumulated distance within 250 kilometers (155 mi) of the nominal distance at each test point.

(e)(1) If a manufacturer conducts multiple tests at any test point at which the data are intended to be used in the calculation of the deterioration factor, the number of tests must be the same at each point and may not exceed

three valid tests unless the manufacturer chooses to average the test results.

(2) If the manufacturer chooses to average the test results at a test point, he may conduct more tests than the minimum number of tests conducted at any other test point.

The results of the multiple tests shall be averaged to create a single value which is the test point value used in the deterioration factor calculation specified in § 86.432–78.

(3) When using this option to generate data for a particular test point, the manufacturer must include in the average all valid test data generated at that test point.

(4) The manufacturer shall follow the same procedure for all exhaust pollutants.

(5) The test results obtained from the emission tests performed before and after maintenance affecting emissions shall not be averaged.

(f) The Administrator may require that any one or more of the test vehicles be submitted to him, at such places as he may designate, for the purpose of conducting emissions tests. The Administrator may specify that he will conduct such testing at the manufacturer's facility, in which case instrumentation and equipment specified by the Administrator shall be made available by the manufacturer for test operations. Any testing conducted at a manufacturer's facility pursuant to this paragraph shall be scheduled by the manufacturer as promptly as possible.

(g) Whenever the Administrator conducts a test on a test vehicle, the results of that test, unless subsequently invalidated by the Administrator, shall comprise the data for the vehicle at that prescribed test point and the manufacturer's data for that prescribed test point shall not be used in determining compliance with emission standards.

[42 FR 1126, Jan. 5, 1977, as amended at 49 FR 48139, Dec. 10, 1984]

§ 86.428–80 Maintenance, scheduled; test vehicles.

(a) Periodic maintenance on the engine, emission control system, and fuel system of test vehicles shall be scheduled for performance at the same distance intervals that will be specified in the manufacturer's maintenance instructions furnished to the ultimate purchaser. Such maintenance shall be performed only under the following provisions.

(b) Periodic major engine tune-ups to the manufacturer's specifications may be performed no more frequently than as follows nor may any tune-up be performed within 1000 km prior to the official test.

Displacement class	Minimum interval (kilometer)
I	3,000
II	3,000
III	4,000

(c) A scheduled major engine tune-up shall be restricted to items listed below and shall be conducted in a manner consistent with service instructions and specifications provided by the manufacturer for use by customer service personnel. The following items may be inspected, replaced, cleaned, adjusted, and/or serviced as required: (1) Breaker points, timing, (2) idle speed and idle air/fuel mixture, (3) valve lash, (4) engine bolt torque, and (5) spark plugs.

(d) The Administrator will specify the ignition timing, idle air fuel mixture and other fuel system adjustments to be used at each tune-up. The settings selected will be those the Administrator deems appropriate within the physically available range.

(e) Periodic change of engine and transmission oil, and change or service of oil, air, and fuel filters will be allowed at the same distance intervals that will be specified in the manufacturer's maintenance instructions.

(f) Requests for authorization of periodic maintenance of emission control related components not specifically authorized to be maintained by this section, and for anticipated maintenance (see § 86.428), must be made prior to the beginning of distance accumulation. The Administrator will approve the performance of such maintenance if the manufacturer makes a satisfactory showing that the maintenance will be performed on vehicles in use and that

the maintenance is reasonable and necessary.

(1) The EGR system may be serviced a maximum of two times during the durability service accumulation if failure of the EGR system activates an audible and/or visual signal approved by the Administrator which alerts the vehicle operator to the need for EGR system maintenance, or if the need for periodic maintenance of the EGR system is overtly signalled to the vehicle operator by an appropriate means, e.g., an indicator light or significantly reduced driveability performance.

(2) The catalytic converter may be serviced only once during the durability service accumulation if failure of the catalytic converter activates an audible and/or visual signal approved by the Administrator which alerts the vehicle operator to the need for catalytic converter maintenance, or if the need for periodic maintenance of the catalytic converter is overtly signalled to the vehicle operator by an appropriate means, e.g., an indicator light or significantly reduced driveability performance.

(g) Certain engine components may require maintenance which, by its nature, cannot be scheduled for periodic intervals, but which the manufacturer believes will be necessary. For example, piston and cylinder replacement caused by piston seizure which results in the vehicle being inoperative; or in the case of two-stroke engines, decarbonization, the need for which is signalled to the vehicle operator by significantly reduce driveability performance. Such maintenance is designated anticipated maintenance. Anticipated maintenance must be identified by the manufacturer and approved as being appropriate by the Administrator prior to the start of service accumulation. The approximate distance at which the need for anticipated maintenance may arise must be specified in the application for certification.

(h) Complete emission tests (see subpart F) are required, unless waived by the Administrator, before and after any vehicle maintenance which may reasonably be expected to affect emissions.

§ 86.429–78 Maintenance, unscheduled; test vehicles.

(a) Any unscheduled engine, emission control system, or fuel system adjustment, repair, removal, disassembly, cleaning, or replacement on vehicles shall be performed only with the advance approval of the Administrator.

(1) In the case of unscheduled maintenance, such approval will be given if the Administrator:

(i) Has made a preliminary determination that part failure or system malfunction, or the repair of such failure or malfunction, does not render the vehicle unrepresentative of vehicles in use, and does not require direct access to the combustion chamber, except for spark plug, fuel injection component, or removable prechamber removal or replacement; and

(ii) Has made a determination that the need for maintenance or repairs is indicated by an overt indication of malfunction such as persistent misfire, vehicle stall, overheating, fluid leakage, loss of oil pressure, or charge indicator warning.

(2) Emission measurements may not be used as a means of determining the need for unscheduled maintenance under paragraph (a)(1)(i) of this section.

(b) Repairs to vehicle components of test vehicles, other than the engine, emission control system, or fuel system, shall be performed only as a result of part failure, vehicle system malfunction, or with the advance approval of the Administrator.

(c) The Administrator shall be given the opportunity to verify the extent of an overt indication of part failure and/or vehicle malfunction (e.g., misfire, stall), or an activation of an audible and/or visual signal, prior to the performance of any maintenance to which such overt indication or signal is relevant under the provisions of this section.

(d) Equipment, instruments, or tools may not be used to identify malfunctioning, maladjusted, or defective engine components unless the same or equivalent equipment, instruments, or tools will be available at dealerships and other service outlets and

(1) Are used in conjunction with scheduled maintenance on such components, and

(2) Are used subsequent to the identification of a vehicle or engine malfunction, as provided in paragraph (a)(1) of this section for durability or emission data vehicles, or

(3) Unless specifically authorized by the Administrator.

(e) If the Administrator determines that part failure or system malfunction occurrence and/or repair rendered the vehicle unrepresentative of vehicles in use, the vehicle shall not be used as a test vehicle.

(f) Complete emission tests are required, unless waived by the Administrator, before and after any vehicle maintenance which may reasonably be expected to affect emissions.

§ 86.430–78 Vehicle failure.

Any test vehicle which incurs major mechanical failure necessitating disassembly of the engine shall not be used as a test vehicle. This prohibition does not apply to failures occurring after the completion of all required tests at the total test distance.

[49 FR 48139, Dec. 10, 1984]

§ 86.431–78 Data submission.

(a) Data from all tests (including voided tests) performed by a manufacturer with total projected sales in excess of 10,000 vehicles shall be included in the application.

(b) The manufacturer shall furnish to the Administrator explanation for voiding any test. The Administrator will determine if voiding the test was appropriate based upon the explanation given by the manufacturer. If the Administrator determines that voiding the test was not appropriate, the Administrator may require that the data from that test be used in the calculation of the deterioration factor for emissions.

(c) When unscheduled or anticipated maintenance is performed, a complete record of all pertinent maintenance, including the malfunction diagnosis made, the corrective action taken, and the test data obtained shall be included in the application.

(d) A complete record of all maintenance shall be supplied.

[42 FR 1126, Jan. 5, 1977, as amended at 49 FR 48139, Dec. 10, 1984]

§ 86.432–78 Deterioration factor.

(a) Deterioration factors shall be developed for each test vehicle from the emission test results. A separate factor shall be developed for each pollutant. The applicable data to be used in calculating these factors are:

(1) The results from all valid tests conducted by the manufacturer or Administrator at scheduled test intervals.

(2) The results from tests conducted before and after scheduled maintenance unless specifically excluded by the Administrator.

(3) The results from tests conducted before and after unscheduled maintenance, if approval of the maintenance by the Administrator was conditioned on the data being used in the deterioration factor calculation.

(b) Emission results which are less than 0.10 g/km shall be considered to be 0.10 g/km for purposes of this section.

(c) Test results for each pollutant shall be plotted as a function of the service accumulated at the start of the emission test, rounded to the nearest kilometre. These results shall be correlated to a straight line, fit by the method of least squares.

(d) An exhaust emission deterioration factor will be calculated by dividing the predicted emissions at the useful life distance by the predicted emissions at the total test distance. Predicted emissions are obtained from the correlation developed in paragraph (c) of this section.

Factor = Predicted total distance emissions/Predicted total test distance emissions

These interpolated and extrapolated values shall be carried out to four places to the right of the decimal point before dividing one by the other to determine the deterioration factor. The results shall be rounded to three places to the right of the decimal point in accordance with ASTM E 29–67.

(e) Deterioration factors computed to be less than 1.000 shall be 1.000.

(f)(1) The manufacturer has the option of applying an outlier test point

procedure to completed durability data within its certification testing program for a given model year.

(2) The outlier procedure will be specified by the Administrator.

(3) For any pollutant, durability-data test points that are identified as outliers shall not be included in the determination of deterioration factors if the manufacturer has elected this option.

(4) The manufacturer shall specify to the Administrator, before the certification of the first engine family for that model year, if it intends to use the outlier procedure.

(5) The manufacturer may not change procedures after the first engine family of the model year is certified.

(6) Where the manufacturer chooses to apply the outlier procedure to a data set containing data which were averaged under § 86.427–78(e), the outlier procedure shall be completed before averaging the data.

[42 FR 1126, Jan. 5, 1977, as amended at 42 FR 56737, Oct. 28, 1977; 49 FR 48139, Dec. 10, 1984]

§ 86.434–78 Testing by the Administrator.

(a) At the conclusion of service accumulation, and after emission tests for deterioration, the Administrator may require confirmatory testing. The Administrator will designate where such testing shall be performed.

(b) The manufacturer may request a retest. The results of the retest will be used to determine compliance.

(c) If the emission results exceed the standard, certification will be denied.

[49 FR 48139, Dec. 10, 1984]

§ 86.435–78 Extrapolated emission values.

(a) If the deterioration factor lines are below the standards between the minimum test distance and the useful life, or if all points used to generate the lines are below the standards, predicted useful life emissions shall be calculated. If not, the manufacturers may elect to withdraw the vehicle or accumulate additional service.

(b) The emission test results of each pollutant obtained from the half life test will be multiplied by the appropriate deterioration factors to determine useful life emissions.

(1) If the useful life emissions are below the standards, certification will be granted.

(2) If any of the useful life emissions exceed the emission standards, the vehicle must (if not withdrawn) accumulate distance to the useful life.

[42 FR 1126, Jan. 5, 1977, as amended at 49 FR 48139, Dec. 10, 1984]

§ 86.436–78 Additional service accumulation.

(a) Additional service up to the useful life will be accumulated under the same conditions as the initial service accumulation.

(b) New deterioration lines will be generated using all applicable test points up to the useful life. The same procedures for determining the original deterioration lines will be used.

(c) [Reserved]

(d) To qualify for certification:

(1) The full life emission test results must be below the standards, and

(2) The deterioration line must be below the standard at the minimum test distance and the useful life, or all points used to generate the line, must be below the standard.

(e) If the vehicle is unable to complete the total distance due to engine mechanical failure, certification will be granted if:

(1) The mechanical failure was anticipated, § 86.428, and

(2) A new deterioration line calculated using the procedure described in § 86.436–78(b) is below the standard at the minimum test distance and at the useful life, and,

(3) The results of the half life emission tests, when adjusted by the new deterioration factors, are below the standards.

[42 FR 1126, Jan. 5, 1977, as amended at 49 FR 48139, Dec. 10, 1984]

§ 86.437–78 Certification.

(a) New motorcycles produced by a manufacturer whose projected sales in the United States is 10,000 or more units (for the model year in which certification is sought) are covered by the following:

(1) The manufacturer shall submit to the Administrator a statement that the test vehicles with respect to which data are submitted have been tested in

accordance with the applicable test procedures, that they meet the requirements of such tests, and that, on the basis of such tests, they conform to the requirements of the regulations in this part. If such statements cannot be made with respect to any vehicle tested, the vehicle shall be identified, and all pertinent test data relating thereto shall be supplied.

(2)(i) If, after a review of the test reports and data submitted by the manufacturer, data derived from any inspection carried out under § 86.441 and any other pertinent data or information, the Administrator determines that a test vehicle(s) meets the requirements of the Act and of this subpart, he will issue a certificate of conformity with respect to such vehicle(s) except in cases covered by § 86.442.

(ii) Such certificate will be issued for such period not to exceed one model year as the Administrator may determine and upon such terms as he may deem necessary to assure that any new motorcycle covered by the certificate will meet the requirements of the act and of this subpart.

(iii) The certificate will cover all vehicles represented by the test vehicle and will certify compliance with no more than one set of applicable standards.

(3)(i) If, after a review of the test reports and data submitted by the manufacturer, data derived from any additional testing conducted pursuant to § 86.427, or information derived from any inspection carried out under § 86.441, or any other pertinent data or information, the Administrator determines that one or more test vehicles of the certification test fleet do not meet applicable standards, he will notify the manufacturer in writing, setting forth the basis for his determination. The manufacturer may request a hearing on the Administrator's determination.

(ii) The manufacturer may, at his option, proceed with any of the following alternatives with respect to any vehicles represented by a test vehicle(s) determined not in compliance with applicable standards:

(A) Request a hearing.

(B) Delete from the application for certification the vehicles represented by the failing test vehicle. (Vehicles so deleted may be included in a later request for certification under paragraph (b)(2)(iii) of this section.) The Administrator will then select in place of each failing vehicle an alternate vehicle chosen in accordance with selection criteria employed in selecting the vehicle that failed, or

(C) Repair the test vehicle and demonstrate by testing that it meets applicable standards. Another vehicle which is in all material respects the same as the first vehicle, as repaired, shall then be operated and tested in accordance with applicable test procedures.

(iii) If the manufacturer does not request a hearing or present the required data under subparagraph (2) of this paragraph, the Administrator will deny certification.

(b) New motorcycles produced by a manufacturer whose projected sales in the United States is less than 10,000 units (for the model year in which certification is sought) are covered by the following:

(1) The manufacturer shall submit to the Administrator an application for certification containing the following:

(i) A brief description of the vehicles to be covered by the certificate (the manufacturer's sales data book or advertising including specifications will satisfy this requirement for most manufacturers).

(ii) A statement signed by the authorized representative of the manufacturer stating: ''The vehicles described herein have been tested in accordance with the provisions of subpart E, part 86, title 40, of the Code of Federal Regulations, and on the basis of these tests are in conformance with that subpart. All of the data and records required by that subpart are on file and are available for inspection by the Administrator. Total sales of vehicles subject to this subpart will be limited to less than 10,000 units.''

(2) If, after a review of the statement the Administrator determines that the requirements of this subpart have been met, he will issue a certificate of conformity with respect to the described vehicles except in cases covered by § 86.442.

(3) Such certificate will be issued for such a period not to exceed one model

year as the Administrator may determine and upon such terms as he may deem necessary to assure that any new motorcycle covered by the certificate will meet the requirements of the Act and of this subpart.

(4) The certificate will cover all vehicles described by the manufacturer.

(5)(i) If, after a review of the statements and descriptions submitted by the manufacturer, the Administrator determines that the applicable requirements have not been met, he will notify the manufacturer in writing, setting forth the basis for his determination. The manufacturer may request a hearing on the Administrator's determination.

(ii) If the manufacturer does not request a hearing or present the required information the Administrator will deny certification.

[42 FR 1126, Jan. 5, 1977, as amended at 42 FR 56738, Oct. 28, 1977; 46 FR 50496, Oct. 13, 1981; 47 FR 49807, Nov. 2, 1982]

§ 86.438–78 Amendments to the application.

(a) The manufacturer shall inform the Administrator by way of amendment to the application of any proposed changes to vehicles in production or additional vehicles to be produced. The Administrator will, if appropriate, select a new test vehicle. Except as provided in § 86.439, no changes may be instituted until approved by the Administrator.

(b) The Administrator may allow reduced testing.

§ 86.439–78 Alternative procedure for notification of additions and changes.

(a)(1) A manufacturer may, in lieu of notifying the Administrator in advance of an addition of a vehicle or a change in a vehicle under § 86.438–78, notify the Administrator concurrently with the addition of a vehicle or the making of a change in a vehicle if the manufacturer determines that following the change all vehicles affected by the addition or change will still meet the applicable emission standards.

(2) Such notification shall include a full description of the addition or change and any supporting documentation the manufacturer may include to support the manufacturer's determination that the addition or change does not cause noncompliance.

(3) The manufacturer's determination that the addition or change does not cause noncompliance shall be based on an engineering evaluation of the addition or change and/or testing.

(b) [Reserved]

(c)(1) The Administrator may require that additional emission testing be performed to support the manufacturer's original determination submitted in accordance with paragraph (a) of this section.

(2) If additional testing is required, the Administrator shall proceed as in § 86.438–78.

(3) Additional test data, if requested, must be provided within 30 days of the request or the manufacturer must rescind the addition or change immediately.

(4) The Administrator may grant additional time to complete testing.

(5) If based on this additional testing or any other information, the Administrator determines that the vehicles affected by the addition or change do not meet the applicable standards, the Administrator will notify the manufacturer to rescind the addition or change immediately upon receipt of the notification.

(d) Election to produce vehicles under this section will be deemed to be a consent to recall all vehicles which the Administrator determines under § 86.438–78 do not meet applicable standards, and to cause such nonconformity to be remedied at no expense to the owner.

[49 FR 48139, Dec. 10, 1984]

§ 86.440–78 Maintenance of records.

(a) The manufacturer of any motorcycle subject to any of the standards or procedures prescribed in this subpart shall establish, maintain and retain the following adequately organized and indexed records;

(1) *General records.* (i)(A) Identification and description of all certification vehicles for which testing is required under this subpart.

(B) A description of all emission control systems which are installed on or incorporated in each certification vehicle.

(C) A description of all procedures used to test each such certification vehicle.

(ii) A properly completed application, following the format prescribed by the U.S. EPA for the appropriate year of production, fulfills each of the requirements of this paragraph.

(2) *Individual records.* (i) A brief history of each motocycle used for certification under this subpart including:

(A)(*1*) In the case where a current production engine is modified for use in a certification vehicle, a description of the process by which the engine was selected and of the modification made.

(*2*) In the case where the engine for a certification vehicle is not derived from a current production engine, a general description of the build-up of the engine (e.g., experimental heads were cast and machined according to supplied drawings, etc.)

(*3*) In both cases above, a description of the origin and selection process for the carburetor, fuel system, emission control system components, and exhaust after treatment device shall be included.

(*4*) The required description shall specify the steps taken to assure that the certification vehicle with respect to its engine, drive train, fuel system, emission control system components, exhaust after treatment device, vehicle mass, or any other device or component that can reasonably be expected to influence exhaust emissions, will be representative of production vehicles, and that either all components and/or vehicle construction processes, component inspection and selection techniques, and assembly techniques employed in constructing such vehicles are reasonably likely to be implemented for production vehicles, or they are as closely analogous as practicable to planned construction and assembly processes.

(B) A complete record of all emission tests performed (except tests performed by EPA directly) including test results, the date and purpose of each test, and the distance accumulated on the vehicle.

(C) The date of each service accumulation run, listing the distance accumulated.

(D) [Reserved]

(E) A record and description of all maintenance and other servicing performed, giving the date of the maintenance or service and the reason for it.

(F) A record and description of each test performed to diagnose engine or emissions control system performance, giving the date and time of the test and the reason for it.

(G) [Reserved]

(H) A brief description of any significant events affecting the vehicle during any time in the period covered by the history, not described by an entry under one of the previous headings, including such extraordinary events as vehicle accidents or dynamometer runaway.

(ii) Each such history shall be started on the date that the first of any of the selection or build-up activities in paragraph (a)(2)(i)(A) of this section occurred with respect to the certification vehicle, shall be updated each time the operational status of the vehicle changes or additional work is performed on it, and shall be kept in a designated location.

(3) All records, other than routine emission test records, required to be maintained under this subpart shall be retained by the manufacturer for a period of six (6) years after the issuance of all certificates of conformity to which they relate. Routine emission test records shall be retained by the manufacturer for a period of one (1) year after issuance of all certificates of conformity to which they relate. Records may be retained as hard copy or reduced to microfilm, punch cards, etc., depending on the record retention procedures of the manufacturer: *Provided* That, in every case, all the information contained in the hard copy shall be retained.

[42 FR 1126, Jan. 5, 1977, as amended at 42 FR 56738, Oct. 28, 1977; 49 FR 48140, Dec. 10, 1984]

§ 86.441–78 Right of entry.

(a) Any manufacturer who has applied for certification of a new motorcycle subject to certification tests under this subpart shall admit or cause to be admitted any EPA Enforcement Officer during operating hours on presentation of any credentials to any of the following:

(1) Any facility where any such tests or any procedures or activities connected with such tests are or were performed.

(2) Any facility where any new motorcycle which is being, was or is to be tested is present.

(3) Any facility where any construction process or assembly process used in the modification or build-up of such a vehicle into a certification vehicle is taking place or has taken place.

(4) Any facility where any record or other document relating to any of the above is located.

(b) Upon admission to any facility referred to in paragraph (c)(1) of this section, any EPA Enforcement Officer shall be allowed:

(1) To inspect and monitor any part or aspect of such procedures, activities, and testing facilities, including, but not limited to, monitoring vehicle preconditioning, emissions tests and service accumulation, maintenance, and vehicle soak and storage procedures; and to verify correlation or calibration of test equipment;

(2) To inspect and make copies of any such records, designs, or other documents; and

(3) To inspect and/or photograph any part or aspect of any such certification vehicle and any components to be used in the construction thereof.

(c) In order to allow the Administrator to determine whether or not production motorcycles conform in all material respects to the design specifications which applied to those vehicles described in the application for certification for which a certificate of conformity has been issued and to standards prescribed under section 202 of the Act, any manufacturer shall admit any EPA Enforcement Officer on presentation of credentials to both:

(1) Any facility where any document design, or procedure relating to the translation of the design and construction of engines and emission related components described in the application for certification or used for certification testing into production vehicles is located or carried on; and

(2) Any facility where any motorcycles to be introduced into commerce are manufactured or assembled.

(d) On admission to any such facility referred to in paragraph (c)(3) of this section, any EPA Enforcement Officer shall be allowed:

(1) To inspect and monitor any aspects of such manufacture or assembly and other procedures;

(2) To inspect and make copies of any such records, documents or designs; and

(3) To inspect and photograph any part or aspect of any such new motorcycles and any component used in the assembly thereof that are reasonably related to the purpose of his entry.

(e) Any EPA Enforcement Officer shall be furnished by those in charge of a facility being inspected with such reasonable assistance as he may request to help him discharge any function listed in this paragraph. Each applicant for or recipient of certification is required to cause those in charge of a facility operated for its benefit to furnish such reasonable assistance without charge to EPA whether or not the applicant controls the facility.

(f) The duty to admit or cause to be admitted any EPA Enforcement Officer applies whether or not the applicant owns or controls the facility in question and applies both to domestic and to foreign manufacturers and facilities. EPA will not attempt to make any inspections which it has been informed that local law forbids. However, if local law makes it impossible to do what is necessary to insure the accuracy of data generated at a facility, no informed judgment that a vehicle or engine is certifiable or is covered by a certificate can properly be based on that data. It is the responsibility of the manufacturer to locate its testing and manufacturing facilities in jurisdictions where this situation will not arise.

(g) For purposes of this section:

(1) *Presentation of credentials* shall mean display of the document designating a person as an EPA Enforcement Officer.

(2) Where vehicle, component, or engine storage areas or facilities are concerned, *operating hours* shall mean all times during which personnel other than custodial personnel are at work in the vicinity of the area or facility and have access to it.

(3) Where facilities or areas other than those covered by paragraph (g)(2) of this section are concerned, *operating hours* shall mean all times during which an assembly line is in operation or all times during which testing, maintenance, service accumulation, production or compilation of records, or any other procedure or activity related to certification testing, to translation of designs from the test stage to the production stage, or to vehicle manufacture or assembly is being carried out in a facility.

(4) *Reasonable assistance* includes, but is not limited to, clerical, copying, interpretation and translation services, the making available on request of personnel of the facility being inspected during their working hours to inform the EPA Enforcement Officer of how the facility operates and to answer his questions, and the performance on request of emissions tests on any vehicle which is being, has been, or will be used for certification testing. Such tests shall be nondestructive, but may require appropriate service accumulation. A manufacturer may be compelled to cause the personal appearance of any employee at such a facility before an EPA Enforcement Officer by written request for his appearance, signed by the Assistant Administrator for Enforcement, served on the manufacturer. Any such employee who has been instructed by the manufacturer to appear will be entitled to be accompanied, represented, and advised by counsel. No counsel who accompanies, represents, or advises an employee compelled to appear may accompany, represent, or advise any other person in the investigation.

(5) Any entry without 24 hours prior written or oral notification to the affected manufacturer shall be authorized in writing by the Assistant Administrator for Enforcement.

§ 86.442–78 Denial, revocation, or suspension of certification.

(a) Notwithstanding the fact that any certification vehicle(s) may comply with other provisions of this subpart, the Administrator may withhold or deny the issuance of a certificate of conformity (or suspend or revoke any such certificate which has been issued) with respect to any such vehicle(s) if:

(1) The manufacturer submits false or incomplete information in his application for certification thereof; or

(2) The manufacturer renders inaccurate or invalid any test data which he submits pertaining thereto or otherwise circumvents the intent of the Act or of this subpart with respect to such vehicle; or

(3) Any EPA Enforcement Officer is denied access on the terms specified in § 86.441 to any facility or portion thereof which contains any of the following:

(i) The vehicle, or

(ii) Any components used or considered for use in its modification or build-up into a certification vehicle, or

(iii) Any production vehicle which is or will be claimed by the manufacturer to be covered by the certificate, or

(iv) Any step in the construction of a vehicle described in paragraph (c) of this section, or

(v) Any records, documents, reports, or histories required by this part to be kept concerning any of the above.

(4) Any EPA Enforcement Officer is denied ''reasonable assistance'' (as defined in § 86.444) in examining any of the items listed in paragraph (a)(1)(iii) of this section.

(b) The sanctions of withholding, denying, revoking, or suspending of a certificate may be imposed for the reasons in paragraph (a) of this section only when the infraction is substantial.

(c) In any case in which a manufacturer knowingly submits false or inaccurate information, or knowingly renders inaccurate or invalid any test data, or commits any fraudulent acts and such acts contribute substantially to the Administrator's decision to issue a certificate of conformity, the Administrator may deem such certificate void ab initio.

(d) In any case in which certification of a vehicle is proposed to be withheld, denied, revoked, or suspended under paragraph (a) (3) or (4) of this section, and in which the Administrator has presented to the manufacturer involved reasonable evidence that a violation of § 86.441 in fact occurred, the manufacturer, if the wishes to contend that, even though the violation occurred, the vehicle in question was not involved in

the violation to a degree that would warrant withholding, denial, revocation, or suspension of certification under either paragraph (a) (3) or (4) of this section, shall have the burden of establishing that contention to the satisfaction of the Administrator.

(e) Any revocation or suspension of certification under paragraph (a) of this section shall:

(1) Be made only after the manufacturer concerned has been offered an opportunity for a hearing conducted in accordance with § 86.444 hereof.

(2) Extend no further than to forbid the introduction into commerce of vehicles previously covered by the certification which are still in the hands of the manufacturer, except in cases of such fraud or other misconduct as makes the certification invalid ab initio.

(f) The manufacturer may request in the form and manner specified in § 86.443 that any determination made by the Administrator under paragraph (a) of this section to withhold or deny certification be reviewed in a hearing conducted in accordance with § 86.444. If the Administrator finds, after a review of the request and supporting data, that the request raises a substantial factual issue, he will grant the request with respect to such issue.

[42 FR 1126, Jan. 5, 1977, as amended at 42 FR 56738, Oct. 28, 1977]

§ 86.443–78 Request for hearing.

Within 30 days following receipt of notification that an application has been rejected or that certification has been denied, the manufacturer may request a hearing on the Administrator's determination. The request shall be in writing, signed by an authorized representative of the manufacturer and shall include a statement specifying the manufacturer's objections to the Administrator's determinations, and data in support of such objections. If, after the review of the request and supporting data, the Administrator finds that the request raises a substantial factual issue, he shall provide the manufacturer a hearing with respect to such issue.

§ 86.444–78 Hearings on certification.

(a)(1) After granting a request for a hearing under § 86.443 the Administrator will designate a Presiding Officer for the hearing.

(2) The General Counsel will represent the Environmental Protection Agency in any hearing under this section.

(3) If a time and place for the hearing have not been fixed by the Administrator under § 86.443, the hearing shall be held as soon as practicable at a time and place fixed by the Administrator or by the Presiding Officer.

(4) In the case of any hearing requested pursuant to § 86.437, the Administrator may in his discretion direct that all argument and presentation of evidence be concluded within such fixed period not less than 30 days as he may establish from the date that the first written offer of a hearing is made to the manufacturer. To expedite proceedings, the Administrator may direct that the decision of the Presiding Officer (who may, but need not be the Administrator himself) shall be the final EPA decision.

(b)(1) Upon his appointment pursuant to paragraph (a) of this section, the Presiding Officer will establish a hearing file. The file shall consist of the notice issue by the Administrator under a hearing and the supporting data submitted therewith and all documents relating to the request for certification and all documents submitted therewith, and correspondence and other data material to the hearing.

(2) The appeal file will be available for inspection by the applicant at the office of the Presiding Officer.

(c) An applicant may appear in person, or may be represented by counsel or by any other duly authorized representative.

(d)(1) The Presiding Officer upon the request of any party, or in his discretion, may arrange for a prehearing conference at a time and place specified by him to consider the following:

(i) Simplification of the issues;

(ii) Stipulations, admissions of fact, and the introduction of documents;

(iii) Limitation of the number of expert witnesses;

(iv) Possibility of agreement disposing of all or any of the issues in dispute;

(v) Such other matters as may aid in the disposition of the hearing, including such additional tests as may be agreed upon by the parties.

(2) The results of the conference shall be reduced to writing by the Presiding Officer and made part of the record.

(e)(1) Hearings shall be conducted by the Presiding Officer in an informal but orderly and expeditious manner. The parties may offer oral or written evidence, subject to the exclusion by the Presiding Officer of irrevelant, immaterial, and repetitious evidence.

(2) Witnesses will not be required to testify under oath. However, the Presiding Officer shall call to the attention of witnesses that their statements may be subject to the provisions of title 18 U.S.C. 1001 which imposes penalties for knowingly making false statements or representations, or using false documents in any matter within the jurisdiction of any department or agency of the United States.

(3) Any witness may be examined or cross-examined by the Presiding Officer, the parties, or their representatives.

(4) Hearings shall be reported verbatim. Copies of transcripts of proceedings may be purchased by the applicant from the reporter.

(5) All written statements, charts, tabulations, and similar data offered in evidence at the hearing shall, upon a showing satisfactory to the Presiding Officer of their authenticity, relevancy, and materiality, be received in evidence and shall constitute a part of the record.

(6) Oral argument may be permitted in the discretion of the Presiding Officer and shall be reported as part of the record unless otherwise ordered by him.

(f)(1) The Presiding Officer shall make an initial decision which shall include written findings and conclusions and the reasons or basis therefore on all the material issues of fact, law, or discretion presented on the record. The findings, conclusions, and written decision shall be provided to the parties and made a part of the record. The initial decision shall become the decision of the Administrator without further proceedings unless there is an appeal to the Administrator or motion for review by the Administrator within 20 days of the date the initial decision was filed.

(2) On appeal from or review of the initial decision the Administrator shall have all the powers which he would have in making the initial decision including the discretion to require or allow briefs, oral argument, the taking of additional evidence or the remanding to the Presiding Officer for additional proceedings. The decision by the Administrator shall include written findings and conclusions and the reasons or basis therefore on all the material issues of fact, law, or discretion presented on the appeal or considered in the review.

§ 86.445–2006 What temporary provisions address hardship due to unusual circumstances?

(a) After considering the circumstances, the Director of the Office of Transportation and Air Quality may permit you to introduce into commerce highway motorcycles that do not comply with emission standards if all the following conditions and requirements apply:

(1) Unusual circumstances that are clearly outside your control and that could not have been avoided with reasonable discretion prevent you from meeting requirements from this chapter.

(2) You exercised prudent planning and were not able to avoid the violation; you have taken all reasonable steps to minimize the extent of the nonconformity.

(3) Not having the exemption will jeopardize the solvency of your company.

(4) No other allowances are available under the regulations of this part to avoid the impending violation, excluding those in § 86.446.

(b) To apply for an exemption, you must send the Designated Compliance Officer a written request as soon as possible before you are in violation. In your request, show that you meet all the conditions and requirements in paragraph (a) of this section.

(c) Include in your request a plan showing how you will meet all the applicable requirements as quickly as possible.

(d) You must give us other relevant information if we ask for it.

(e) We may include reasonable additional conditions on an approval granted under this section, including provisions to recover or otherwise address the lost environmental benefit or paying fees to offset any economic gain resulting from the exemption. For example, in the case of multiple tiers of emission standards, we may require that you meet the less stringent standards.

(f) Add a permanent, legible label, written in block letters in English, to a readily visible part of each motorcycle exempted under this section. This label must include at least the following items:

(1) The label heading ''EMISSION CONTROL INFORMATION''.

(2) Your corporate name and trademark.

(3) Engine displacement (in liters) and model year of the engine or whom to contact for further information.

(4) The statement ''THIS MOTORCYCLE IS EXEMPT UNDER 40 CFR 86.445–2006 FROM EMISSION STANDARDS AND RELATED REQUIREMENTS.''.

[69 FR 2437, Jan. 15, 2004]

§ 86.446–2006 What are the provisions for extending compliance deadlines for small-volume manufacturers under hardship?

(a) After considering the circumstances, the Director of the Office of Transportation and Air Quality may extend the compliance deadline for you to meet new or revised emission standards, as long as you meet all the conditions and requirements in this section.

(b) To be eligible for this exemption, you must qualify as a small-volume manufacturer under § 86.410–2006(e).

(c) To apply for an extension, you must send the Designated Compliance Officer a written request. In your request, show that all the following conditions and requirements apply:

(1) You have taken all possible business, technical, and economic steps to comply.

(i) In the case of importers, show that you attempted to find a manufacturer capable of supplying complying products as soon as you became aware of the applicable requirements, but were unable to do so.

(ii) For all other manufacturers, show that the burden of compliance costs prevents you from meeting the requirements of this chapter.

(2) Not having the exemption will jeopardize the solvency of your company.

(3) No other allowances are available under the regulations in this part to avoid the impending violation, excluding those in § 86.445.

(d) In describing the steps you have taken to comply under paragraph (c)(1) of this section, include at least the following information:

(1) Describe your business plan, showing the range of projects active or under consideration.

(2) Describe your current and projected financial standing, with and without the burden of complying fully with the regulations in this part.

(3) Describe your efforts to raise capital to comply with regulations in this part (this may not apply for importers).

(4) Identify the engineering and technical steps you have taken or plan to take to comply with the regulations in this part.

(5) Identify the level of compliance you can achieve. For example, you may be able to produce engines that meet a somewhat less stringent emission standard than the regulations require.

(e) Include in your request a plan showing how you will meet all the applicable requirements as quickly as possible.

(f) You must give us other relevant information if we ask for it.

(g) An authorized representative of your company must sign the request and include the statement: ''All the information in this request is true and accurate, to the best of my knowledge.''

(h) Send your request for this extension at least nine months before new standards apply. Do not send your request before the regulations in question apply to other manufacturers.

(i) We may include reasonable requirements on an approval granted under this section, including provisions to recover or otherwise address the lost environmental benefit. For example, we may require that you meet a less stringent emission standard or buy and use available emission credits.

(j) We will approve extensions of up to one year. We may review and revise an extension as reasonable under the circumstances.

(k) Add a permanent, legible label, written in block letters in English, to a readily visible part of each motorcycle exempted under this section. This label must include at least the following items:

(1) The label heading ''EMISSION CONTROL INFORMATION''.

(2) Your corporate name and trademark.

(3) Engine displacement (in liters) and model year of the motorcycle or whom to contact for further information.

(4) The statement ''THIS MOTORCYCLE IS EXEMPT UNDER 40 CFR 86.446 FROM EMISSION STANDARDS AND RELATED REQUIREMENTS.''.

[69 FR 2437, Jan. 15, 2004]

§ 86.447–2006 What provisions apply to motorcycle engines below 50 cc that are certified under the Small SI program or the Recreational-vehicle program?

(a) *General provisions.* If you are an engine manufacturer, this section allows you to introduce into commerce a new highway motorcycle (that is, a motorcycle that is a motor vehicle) if it has an engine below 50 cc that is already certified to the requirements that apply to engines or vehicles under 40 CFR part 90 or 1051 for the appropriate model year. If you comply with all the provisions of this section, we consider the certificate issued under 40 CFR part 90 or 1051 for each engine or vehicle to also be a valid certificate of conformity under this part 86 for its model year, without a separate application for certification under the requirements of this part 86. See § 86.448–2006 for similar provisions that apply to vehicles that are certified to chassis-based standards under 40 CFR part 1051.

(b) *Vehicle-manufacturer provisions.* If you are not an engine manufacturer, you may produce highway motorcycles using nonroad engines below 50 cc under this section as long as you meet all the requirements and conditions specified in paragraph (d) of this section. If you modify the nonroad engine in any of the ways described in paragraph (d)(2) of this section for installation in a highway motorcycle, we will consider you a manufacturer of a new highway motorcycle. Such engine modifications prevent you from using the provisions of this section.

(c) *Liability.* Engines for which you meet the requirements of this section, and vehicles containing these engines, are exempt from all the requirements and prohibitions of this part, except for those specified in this section. Engines and vehicles exempted under this section must meet all the applicable requirements from 40 CFR part 90 or 1051. This applies to engine manufacturers, vehicle manufacturers who use these engines, and all other persons as if these engines were used in recreational vehicles or other nonroad applications. The prohibited acts of 42 U.S.C. 7522 apply to these new highway motorcycles; however, we consider the certificate issued under 40 CFR part 90 or 1051 for each engine to also be a valid certificate of conformity under this part 86 for its model year. If we make a determination that these engines do not conform to the regulations during their useful life, we may require you to recall them under 40 CFR part 86, 90, or 1068.

(d) *Specific requirements.* If you are an engine or vehicle manufacturer and meet all the following criteria and requirements regarding your new engine or vehicle, the highway motorcycle is eligible for an exemption under this section:

(1) Your engine must be below 50 cc and must be covered by a valid certificate of conformity for Class II engines issued under 40 CFR part 90 or for recreational vehicles under 40 CFR part 1051.

(2) You must not make any changes to the certified engine that could reasonably be expected to increase its exhaust emissions for any pollutant, or its evaporative emissions, if applicable.

For example, if you make any of the following changes to one of these engines, you do not qualify for this exemption:

(i) Change any fuel system or evaporative system parameters from the certified configuration.

(ii) Change, remove, or fail to properly install any other component, element of design, or calibration specified in the engine manufacturer's application for certification. This includes aftertreatment devices and all related components.

(iii) Modify or design the engine cooling system so that temperatures or heat rejection rates are outside the original engine manufacturer's specified ranges.

(3) You must show that fewer than 50 percent of the engine family's total sales in the United States are used in highway motorcycles. This includes engines used in any application, without regard to which company manufactures the vehicle or equipment. In addition, if you manufacture highway motorcycles, you must show that fewer than 50 percent of the engine family's total sales in the United States are highway motorcycles. Show that you meet the engine-sales criterion as follows:

(i) If you are the original manufacturer of the engine, base this showing on your sales information.

(ii) In all other cases, you must get the original manufacturer of the engine to confirm the engine sales volumes based on its sales information.

(4) You must ensure that the engine has the label we require under 40 CFR part 90 or 1051.

(5) You must add a permanent supplemental label to the engine in a position where it will remain clearly visible after installation in the vehicle. In the supplemental label, do the following:

(i) Include the heading: ''HIGHWAY MOTORCYCLE ENGINE EMISSION CONTROL INFORMATION''.

(ii) Include your full corporate name and trademark. You may instead include the full corporate name and trademark of another company you choose to designate.

(iii) State: ''THIS ENGINE WAS ADAPTED FOR HIGHWAY USE WITHOUT AFFECTING ITS EMISSION CONTROLS.''.

(iv) State the date you finished installation (month and year), if applicable.

(6) Send the Designated Compliance Officer a signed letter by the end of each calendar year (or less often if we tell you) with all the following information:

(i) Identify your full corporate name, address, and telephone number.

(ii) List the engine or vehicle models you expect to produce under this exemption in the coming year.

(iii) State: ''We produce each listed [engine or vehicle] model for without making any changes that could increase its certified emission levels, as described in 40 CFR 86.447–2006.''.

(e) *Failure to comply*. If your highway motorcycles do not meet the criteria listed in paragraph (d) of this section, they will be subject to the standards, requirements, and prohibitions of this part 86 and the certificate issued under 40 CFR part 90 or 1051 will not be deemed to also be a certificate issued under this part 86. Introducing these engines into commerce without a valid exemption or certificate of conformity under this part violates the prohibitions in 40 CFR part 85.

(f) *Data submission*. We may require you to send us emission test data on any applicable nonroad duty cycles.

(g) *Participation in averaging, banking and trading*. Engines or vehicles adapted for recreational use under this section may not generate or use emission credits under this part 86. These engines or vehicles may generate credits under the ABT provisions in 40 CFR part 90 or 1051. These engines or vehicles must use emission credits under 40 CFR part 90 or 1051 if they are certified to an FEL that exceeds an applicable standard.

[70 FR 40435, July 13, 2005]

§ 86.448–2006 What provisions apply to vehicles certified under the Recreational-vehicle program?

(a) *General provisions*. If you are a highway-motorcycle manufacturer, this section allows you to introduce into commerce a new highway motorcycle with an engine below 50 cc if it is already certified to the requirements that apply to recreational vehicles under 40 CFR parts 1051. A highway

motorcycle is a motorcycle that is a motor vehicle. If you comply with all of the provisions of this section, we consider the certificate issued under 40 CFR part 1051 for each recreational vehicle to also be a valid certificate of conformity for the motor vehicle under this part 86 for its model year, without a separate application for certification under the requirements of this part 86. See § 86.447–2006 for similar provisions that apply to nonroad engines produced for highway motorcycles.

(b) *Nonrecreational-vehicle provisions.* If you are not a recreational-vehicle manufacturer, you may produce highway motorcycles from recreational vehicles with engines below 50 cc under this section as long as you meet all the requirements and conditions specified in paragraph (d) of this section. If you modify the recreational vehicle or its engine in any of the ways described in paragraph (d)(2) of this section for installation in a highway motorcycle, we will consider you a manufacturer of a new highway motorcycle. Such modifications prevent you from using the provisions of this section.

(c) *Liability.* Vehicles for which you meet the requirements of this section are exempt from all the requirements and prohibitions of this part, except for those specified in this section. Engines and vehicles exempted under this section must meet all the applicable requirements from 40 CFR part 1051. This applies to engine manufacturers, vehicle manufacturers, and all other persons as if the highway motorcycles were recreational vehicles. The prohibited acts of 42 U.S.C. 7522 apply to these new highway motorcycles; however, we consider the certificate issued under 40 CFR part 1051 for each recreational vehicle to also be a valid certificate of conformity for the highway motorcycle under this part 86 for its model year. If we make a determination that these engines or vehicles do not conform to the regulations during their useful life, we may require you to recall them under 40 CFR part 86 or 40 CFR 1068.505.

(d) *Specific requirements.* If you are a recreational-vehicle manufacturer and meet all the following criteria and requirements regarding your new highway motorcycle and its engine, the highway motorcycle is eligible for an exemption under this section:

(1) Your motorcycle must have an engine below 50 cc and it must be covered by a valid certificate of conformity as a recreational vehicle issued under 40 CFR part 1051.

(2) You must not make any changes to the certified recreational vehicle that we could reasonably expect to increase its exhaust emissions for any pollutant, or its evaporative emissions if it is subject to evaporative-emission standards. For example, if you make any of the following changes, you do not qualify for this exemption:

(i) Change any fuel system parameters from the certified configuration.

(ii) Change, remove, or fail to properly install any other component, element of design, or calibration specified in the vehicle manufacturer's application for certification. This includes aftertreatment devices and all related components.

(iii) Modify or design the engine cooling system so that temperatures or heat rejection rates are outside the original vehicle manufacturer's specified ranges.

(3) You must show that fewer than 50 percent of the engine family's total sales in the United States are used in highway motorcycles. This includes highway and off-highway motorcycles, without regard to which company completes the manufacturing of the highway motorcycle. Show this as follows:

(i) If you are the original manufacturer of the vehicle, base this showing on your sales information.

(ii) In all other cases, you must get the original manufacturer of the vehicle to confirm this based on their sales information.

(4) The highway motorcycle must have the vehicle emission control information we require under 40 CFR part 1051.

(5) You must add a permanent supplemental label to the highway motorcycle in a position where it will remain clearly visible. In the supplemental label, do the following:

(i) Include the heading: ''HIGHWAY MOTORCYCLE ENGINE EMISSION CONTROL INFORMATION''.

(ii) Include your full corporate name and trademark. You may instead include the full corporate name and trademark of another company you choose to designate.

(iii) State: ''THIS VEHICLE WAS ADAPTED FOR HIGHWAY USE WITHOUT AFFECTING ITS EMISSION CONTROLS.''.

(iv) State the date you finished modifying the vehicle (month and year), if applicable.

(6) Send the Designated Compliance Officer a signed letter by the end of each calendar year (or less often if we tell you) with all the following information:

(i) Identify your full corporate name, address, and telephone number.

(ii) List the highway motorcycle models you expect to produce under this exemption in the coming year.

(iii) State: ''We produced each listed highway motorcycle without making any changes that could increase its certified emission levels, as described in 40 CFR 86.448–2006.''.

(e) *Failure to comply*. If your highway motorcycles do not meet the criteria listed in paragraph (d) of this section, they will be subject to the standards, requirements, and prohibitions of this part 86 and 40 CFR part 85, and the certificate issued under 40 CFR part 1051 will not be deemed to also be a certificate issued under this part 86. Introducing these motorcycles into commerce without a valid exemption or certificate of conformity under this part violates the prohibitions in 40 CFR part 85.

(f) *Data submission*. We may require you to send us emission test data on the duty cycle for Class I motorcycles.

(g) *Participation in averaging, banking and trading*. Recreational vehicles adapted for use as highway motorcycles under this section may not generate or use emission credits under this part 86. These engines may generate credits under the ABT provisions in 40 CFR part 1051. These engines must use emission credits under 40 CFR part 1051 if they are certified to an FEL that exceeds an applicable standard.

[70 FR 40436, July 13, 2005]

§ 86.449 Averaging provisions.

(a) This section describes how and when averaging may be used to show compliance with applicable $HC+NO_X$ emission standards. Emission credits may not be banked for use in later model years, except as specified in paragraph (j) of this section.

(1) Compliance with the Class I and Class II $HC+NO_X$ standards set forth in § 86.410–2006 (f) may be demonstrated using the averaging provisions of this section. To do this you must show that your average emission levels are at or below the applicable standards in § 86.410–2006.

(2) Compliance with the Class III $HC+NO_X$ standards set forth in § 86.410–2006 (a)(2) may be demonstrated using the averaging provisions of this section. To do this you must show that your average emission levels are at or below the applicable standards in § 86.410–2006.

(3) Family emission limits (FELs) may not exceed the following caps:

Class	Tier	Model year	FEL cap (g/km)
			$HC+NO_X$
Class I or II	Tier 1	2006 and later	5.0
Class III	Tier 1	2006–2009	5.0
	Tier 2	2010 and later	2.5

(b) Do not include any exported vehicles in the certification averaging program. Include only motorcycles certified under this subpart and intended for sale in the United States.

(c) To use the averaging program, do the following things:

(1) Certify each vehicle to a family emission limit.

(2) Calculate a preliminary average emission level according to paragraph (d) of this section using projected production volumes for your application for certification.

(3) After the end of your model year, calculate a final average emission level according to paragraph (d) of this section for each averaging set for which you manufacture or import motorcycles.

(d) Calculate your average emission level for each averaging set for each model year according to the following equation and round it to the nearest tenth of a g/km. Use consistent units throughout the calculation. The averaging sets are defined in paragraph (k) of this section.

(1) Calculate the average emission level as:

$$\text{Emission level} = \left[\sum_i (\text{FEL})_i \times (\text{UL})_i \times (\text{Production})_i\right] \Big/ \left[\sum_i (\text{Production})_i \times (\text{UL})_i\right]$$

Where:

FEL_i = The FEL to which the engine family is certified.

UL_i = The useful life of the engine family.

$Production_i$ = The number of vehicles in the engine family.

(2) Use production projections for initial certification, and actual production volumes to determine compliance at the end of the model year.

(e)(1) Maintain and keep five types of properly organized and indexed records for each group and for each emission family:

(i) Model year and EPA emission family.

(ii) FEL.

(iii) Useful life.

(iv) Projected production volume for the model year.

(v) Actual production volume for the model year.

(2) Keep paper records of this information for three years from the due date for the end-of-year report. You may use any additional storage formats or media if you like.

(3) Follow paragraphs (f) through (i) of this section to send us the information you must keep.

(4) We may ask you to keep or send other information necessary to implement this subpart.

(f) Include the following information in your application for certification:

(1) A statement that, to the best of your belief, you will not have a negative credit balance for any motorcycle when all credits are calculated. This means that if you believe that your average emission level will be above the standard (*i.e.*, that you will have a deficit for the model year), you must have banked credits pursuant to paragraph (j) of this section to offset the deficit.

(2) Detailed calculations of projected emission credits (zero, positive, or negative) based on production projections. If you project a credit deficit, state the source of credits needed to offset the credit deficit.

(g) At the end of each model year, send an end-of-year report.

(1) Make sure your report includes the following things:

(i) Calculate in detail your average emission level and any emission credits based on actual production volumes.

(ii) If your average emission level is above the allowable average standard, state the source of credits needed to offset the credit deficit.

(2) Base your production volumes on the point of first retail sale. This point is called the final product-purchase location.

(3) Send end-of-year reports to the Designated Compliance Officer within 120 days of the end of the model year. If you send reports later, EPA may void your certificate ab initio.

(4) If you generate credits for banking pursuant to paragraph (j) of this section and you do not send your end-of-year reports within 120 days after the end of the model year, you may not use the credits until we receive and review your reports. You may not use projected credits pending our review.

(5) You may correct errors discovered in your end-of-year report, including errors in calculating credits according to the following table:

If . . .	And if . . .	Then we . . .
(i) Our review discovers an error in your end-of-year report that increases your credit balance.	The discovery occurs within 180 days of receipt.	Restore the credits for your use.
(ii) You discover an error in your report that increases your credit balance.	The discovery occurs within 180 days of receipt.	Restore the credits for your use.
(iii) We or you discover an error in your report that increases your credit balance.	The discovery occurs more than 180 days after receipt.	Do not restore the credits for your use.
(iv) We discover an error in your report that reduces your credit balance.	At any time after receipt	Reduce your credit balance.

(h) Include in each report a statement certifying the accuracy and authenticity of its contents.

(i) We may void a certificate of conformity for any emission family if you do not keep the records this section requires or give us the information when we ask for it.

(j) You may include Class III motorcycles that you certify with $HC+NO_X$ emissions below 0.8 g/km in the following optional early banking program:

(1) To include a Class III motorcycle in the early banking program, assign it an emission rate of 0.8 g/km when calculating your average emission level for compliance with the Tier 1 standards.

(2)(i) Calculate bankable credits from the following equation:

Bonus credit = Y × [(0.8 g/km − Certified emission level)] × [(Production volume of engine family) × (Useful life)]

(ii) The value of Y is defined by the model year and emission level, as shown in the following table:

Model year	Multiplier (Y) for use in MY 2010 or later corporate averaging	
	If your certified emission level is less than 0.8 g/km, but greater than 0.4 g/km, then Y = . . .	If your certified emission level is less than 0.4 g/km, then Y = . . .
2003 through 2006	1.500	3.000
2007	1.375	2.500
2008	1.250	2.000
2009	1.125	1.500

(3) Credits banked under this paragraph (j) may be use for compliance with any 2010 or later model year standards as follows:

(i) If your average emission level is above the average standard, calculate your credit deficit according to the following equation, rounding to the nearest tenth of a gram:

Deficit = (Emission Level − Average Standard) × (Total Annual Production) × (Useful Life)

(ii) Credit deficits may be offset using banked credits.

(k) Credits may not be exchanged across averaging sets except as explicitly allowed by this paragraph (k).

(1) There are two averaging sets:

(i) Class I and Class II motorcycles certified to $HC+NO_X$ standards.

(ii) Class III motorcycles.

(2) Where a manufacturer's average $HC+NO_X$ emission level for Class III motorcycles (as calculated under paragraph (d)(1) of this section) is below the applicable standard, the manufacturer may generate credits that may be used show compliance with $HC+NO_X$ standards for Class I and Class II motorcycles during the same model year. Use the following equations to calculate credits and credit deficits for each class or subclass:

Credit = (Average Standard − Emission Level) × (Total Annual Production) × (Useful Life)

Deficit = (Emission Level − Average Standard) × (Total Annual Production) × (Useful Life)

(l) Manufacturers participating in the averaging program of this section may modify FELs during the model year as specified in this paragraph (l).

(1) Upon notifying EPA, manufacturers may raise the FEL for an engine family and begin labeling motorcycles with the new FEL.

(2) Manufacturers may ask to lower FELs based on test data of production vehicles showing that the motorcycles in the engine family have emissions below the new FEL. Manufacturers must test the motorcycles according to 40 CFR part 1051, subpart D. Manufacturers may not begin labeling motorcycles with the new FEL until they have received EPA approval to do so.

(3) Manufacturers may not change the FEL of any motorcycle that has been placed into service or that is no longer in their possession.

[69 FR 2439, Jan. 15, 2004]

Subpart F—Emission Regulations for 1978 and Later New Motorcycles; Test Procedures

SOURCE: 42 FR 1137, Jan. 5, 1977, unless otherwise noted.

§ 86.501–78 Applicability.

(a) This subpart contains the motorcycle test procedures specified in subpart E.

(b) Provisions of this subpart apply to tests performed by both the Administrator and motor vehicle manufacturers.

§ 86.502–78 Definitions.

(a) The definitions in § 86.402–78 apply to this subpart.

(b) [Reserved]

§ 86.503–78 Abbreviations.

(a) The abbreviations in § 86.403–78 apply to this subpart.

(b) [Reserved]

§ 86.504–78 Section numbering.

(a) The section numbering system described in § 86.404–78 is used in this subpart.

(b) [Reserved]

§ 86.505–78 Introduction; structure of subpart.

(a) This subpart describes the equipment required and the procedures to follow in order to perform exhaust emission tests on motorcycles. Subpart E sets forth the testing requirements and test intervals necessary to comply with EPA certification procedures.

(b) Three topics are addressed in this subpart. Sections 86.508 through 86.515 set forth specifications and equipment requirements; §§ 86.516 through 86.526 discuss calibration methods and frequency; test procedures and data requirements are listed (in approximate order of performance) in §§ 86.527 through 86.544.

§ 86.505–2004 Introduction; structure of subpart.

(a) This subpart describes the equipment required and the procedures to follow in order to perform exhaust emission tests on motorcycles. Subpart E sets forth the testing requirements and test intervals necessary to comply with EPA certification procedures. Alternate equipment, procedures, and calculation methods may be used if shown to yield equivalent or superior results, and if approved in advance by the Administrator.

(b) Three topics are addressed in this subpart. Sections 86.508 through 86.515 set forth specifications and equipment requirements; §§ 86.516 through 86.526 discuss calibration methods and frequency; test procedures and data requirements are listed (in approximate order of performance) in §§ 86.527 through 86.544.

(c) For diesel-fueled motorcycles, use the sampling and analytical procedures and the test fuel described in subpart B of this part for diesel-fueled light-duty vehicles. PM measurement is not required.

[69 FR 2440, Jan. 15, 2004]

§ 86.508–78 Dynamometer.

(a) The dynamometer shall have a single roll with a diameter of at least 0.400 metre.

(b) The dynamometer shall be equipped with a roll revolution counter for measuring actual distance traveled.

(c) Flywheels or other means shall be used to stimulate the inertia specified in § 86.529.

(d) A variable speed cooling blower shall direct air to the vehicle. The blower outlet shall be at least 0.40 m^2 (4.31 ft^2) and shall be squarely positioned between 0.3 m (0.98 ft) and 0.45 m (1.48 ft) in front of the vehicle's front wheel. The velocity of the air at the blower outlet shall be within the following limits (as a function of roll speed):

Actual roll speed	Allowable cooling air speed
0 km/h to 5 km/h	0 km/h to 10 km/h.
5 km/h to 10 km/h	0 km/h to roll speed + 5 km/h.
10 km/h to 50 km/h	Roll speed ±5 km/h.
50 km/h to 70 km/h	Roll speed ±10 pct.
Above 70 km/h	At least 63 km/h.

(e) The dynamometer shall comply with the tolerances in § 86.529.

[42 FR 1137, Jan. 5, 1977, as amended at 42 FR 56738, Oct. 28, 1977]

§ 86.509–90 Exhaust gas sampling system.

(a)(1) *General*. The exhaust gas sampling system is designed to measure the true mass emissions of vehicle exhaust. In the CVS concept of measuring mass emissions, two conditions must be satisfied: the total volume of the mixture of exhaust and dilution air must be measured and a continuously proportioned volume of sample must be collected for analysis. Mass emissions are determined from the sample concentration and totalized flow over the test period.

(2) *Vehicle tailpipe to CVS duct*. For methanol fueled vehicles, cooling of the exhaust gases in the duct connecting the vehicle tailpipe to the CVS shall be minimized. This may be accomplished by:

(i) Using a duct of unrestricted length maintained at a temperature above the maximum dew point of the exhaust, but below 121 °C (250 °F); heating and possibly cooling capabilities are required; or

(ii) Using a short duct (up to 12 feet long) constructed of smooth wall pipe with a minimum of flexible sections, maintained at a temperature above the maximum dew point of the exhaust, but below 121 °C (250 °F), prior to the test and during any breaks in the test and uninsulated during the test (insulation may remain in place and/or heating may occur during testing provided maximum temperature is not exceeded); or

(iii) Using smooth wall duct less than five feet long with no required heating. A maximum of two short flexible connectors are allowed under this option; or

(iv) Omitting the duct and performing the exhaust gas dilution function at the motorcycle tailpipe exit.

(3) *Positive displacement pump*. The Positive Displacement Pump-Constant Volume Sampler (PDP-CVS), Figure F90–1 satisfies the first condition by metering at a constant temperature and pressure through the pump. The total volume is measured by counting the revolutions made by the calibrated positive displacement pump. The proportional samples are achieved by sampling at a constant flow rate. For methanol-fueled motorcycle sample lines for the methanol and formaldehyde samples are heated to prevent condensation. The temperature of the sample lines shall be more than 3 °C (5 °F) above the maximum dew point of the sample, but below 121 °C (250 °F). (Note: For 1990 through 1994 model year methanol-fueled motorcycles, methanol and formaldehyde sampling may be omitted provided the bag sample (hydrocarbons and methanol) is analyzed using a HFID calibrated with methanol.)

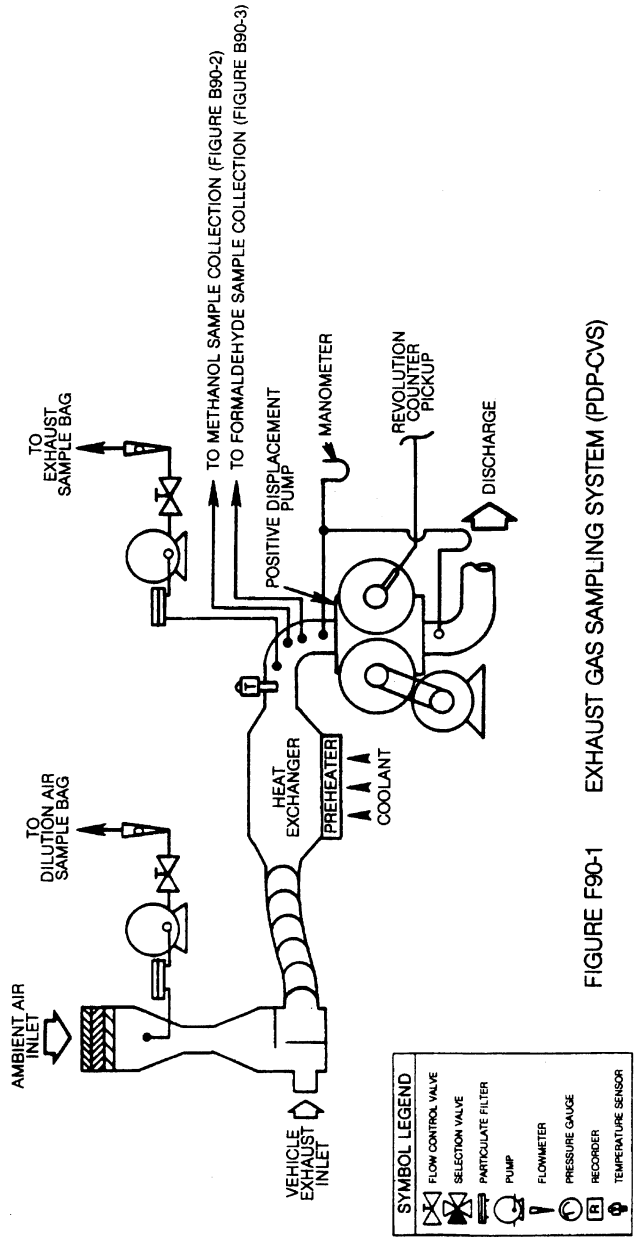

FIGURE F90-1 EXHAUST GAS SAMPLING SYSTEM (PDP-CVS)

(4) *Critical flow venturi.* The operation of the Critical Flow Venturi—Constant Volume Sampler (CFV-CVS) sample system, Figure F90–2, is based upon the principles of fluid dynamics associated with critical flow. Proportional sampling throughout temperature excursions is maintained by use of small

CFVs in the sample lines, which respond to the varying temperatures in the same manner as the main CFV. For methanol-fueled motorcycles, the methanol and formaldehyde sample lines are heated to prevent condensation. The temperature of the sample lines shall be more than 3 °C (5 °F) above the maximum dew point of the sample, but below 121 °C (250 °F). Care must be taken to ensure that the CFVs of the sample probes are not heated since heating of the CFVs would cause loss of proportionality. (Note: For 1990 through 1994 model year methanol-fueled motorcycles, methanol and formaldehyde sampling may be omitted provided the bag sample (hydrocarbons and methanol) is analyzed using a HFID calibrated with methanol.) Total flow per test is determined by continuously computing and integrating instantaneous flow. A low response time temperature sensor is necessary for accurate flow calculation.

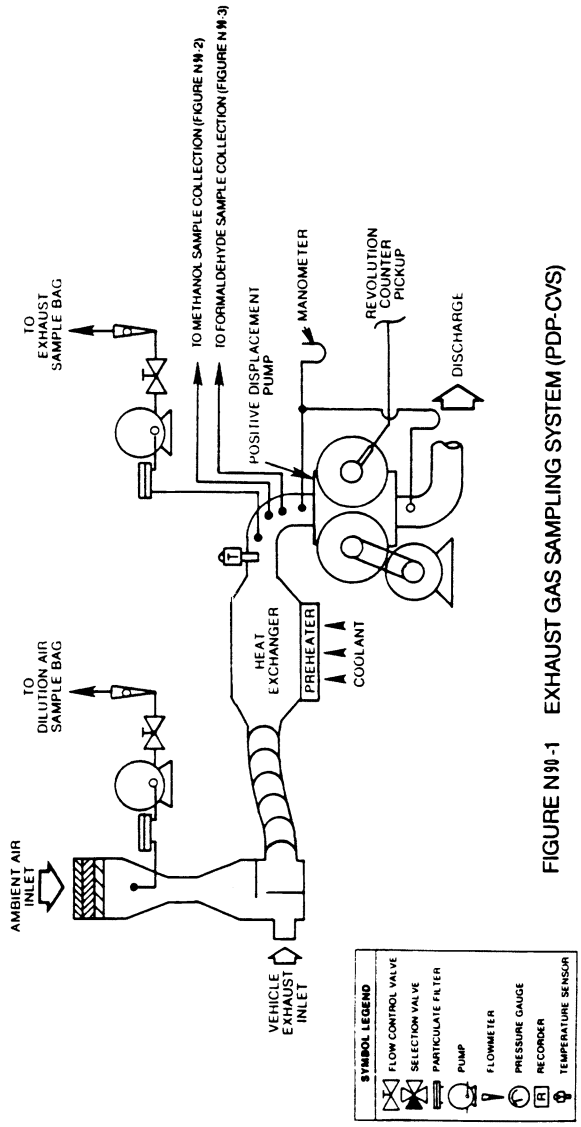

FIGURE N90-1 EXHAUST GAS SAMPLING SYSTEM (PDP-CVS)

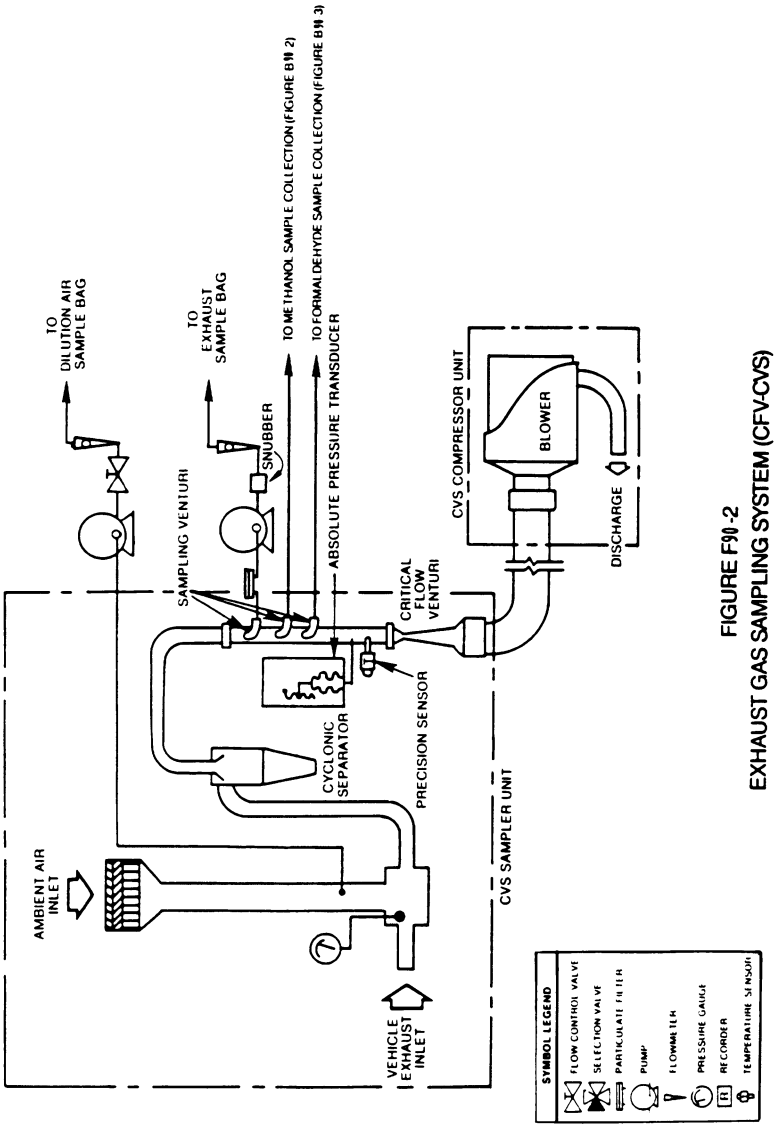

FIGURE F90-2
EXHAUST GAS SAMPLING SYSTEM (CFV-CVS)

(5) *Electronic Flow Control.* The Critical Flow Venturi—Electronic Flow Control—Constant Volume Sampler (CFV-EFC-CVS) system is identical to the CFV-CVS system described in paragraphs (a)(4) and (c) of this section, except that it maintains proportional sampling for methanol and formaldehyde by measuring the CVS flow rate, and electronically controlling sample flow rates. It is recommended that sample volumes be measured by separate flow meters. For methanol-fueled motorcycles, the samples lines for the methanol and formaldehyde samples are heated to prevent condensation. The temperature of the sample lines shall be more than 20 °F (11 °C) above

the maximum dew point of the sample, but below 121 °C (250 °F).

(6) *Other systems.* Other sampling systems may be used if shown to yield equivalent results, and if approved in advance by the Administrator (*e.g.*, a heat exchanger with the CFV-CVS or an electronic flow integrator without a heat exchanger, with the PDP-CVS).

(b) *Component description, PDP-CVS.* The PDP-CVS, Figure F90–1, consists of a dilution air filter and mixing assembly, heat exchanger, positive displacement pump, sampling systems including, probes and sampling lines which, in the case of the methanol-fueled motorcycles, are heated to prevent condensation (heating of the sample lines may be omitted, provided the methanol and formaldehyde sample collection systems are close coupled to the probes thereby preventing loss of sample due to cooling and resulting condensation in the sample lines), and associated valves, pressure and temperature sensors. The PDP-CVS shall conform to the following requirements:

(1) Static pressure variations at the tailpipe(s) of the vehicle shall remain within ±1.25 kPa (±5.02 in H_2O) of the static pressure variations measured during a dynamometer driving cycle with no connection to the tailpipe(s). (Sampling systems capable of maintaining the static pressure to within ±0.25 kPa (±1.00 in. H_2O) will be used by the Administrator if a written request substantiates the need for this closer tolerance.)

(2) The gas mixture temperature, measured at a point immediately ahead of the positive displacement pump, shall be within ±5 °C (9 °F) of the designed operating temperature at the start of the test. The gas mixture temperature variation from its value at the start of the test shall be limited to ±5 °C (9 °F) during the entire test. The temperature measuring system shall have an accuracy and precision of ±1 °C (1.8 °F).

(3) The pressure gauges shall have an accuracy and precision of ±0.4 kPa (±3 mm Hg).

(4) The location of the dilution air inlet shall be placed so as to use test-cell air for dilution and the flow capacity of the CVS shall be large enough to completely eliminate water condensation in the dilution and sampling systems. Control of water condensation with methanol-fueled vehicles is critical. Additional care may also be required to eliminate water condensation when testing natural gas and liquefied petroleum gas-fueled vehicles. (Procedures for determining CVS flow rates are detailed in ''Calculation of Emissions and Fuel Economy When Using Alternative Fuels,'' EPA 460/3–83–009.) Dehumidifying the dilution air before entering the CVS is allowed. Heating the dilution air is also allowed, provided:

(i) The air (or air plus exhaust gas) temperature does not exceed 121 °C (250 °F).

(ii) Calculation of the CVS flow rate necessary to prevent water condensation is based on the lowest temperature encountered in the CVS prior to sampling. (It is recommended that the CVS system be insulated when heated dilution air is used.)

(iii) The dilution ratio is sufficiently high to prevent condensation in bag samples as they cool to room temperature.

(5) Sample collection bags for dilution air and exhaust samples (hydrocarbons and carbon monoide) shall be of sufficient size so as not to impede sample flow. A single dilution air sample, covering the total test period, may be collected for the determination of methanol and formaldehyde background (methanol-fueled motorcycles).

(6) The methanol sample collection system and the formaldehyde sample collection system shall each be of sufficient capacity so as to collect samples of adequate size for analysis without significant impact on the volume of dilute exhaust passing through the PDP. The systems shall also comply with the following requirements that apply to the design of the systems, not to individual tests:

(i) The methanol system shall be designed such that if a test motorcycle continuously emitted the maximum allowable level of methanol (based on all applicable standards) the measured concentration in the primary impinger would exceed either 25 mg/l or a concentration equal to 25 times the limit of detection for the GC analyzer.

(ii) The formaldehyde system shall be designed such that if a test motorcycle continuously emitted formaldehyde at a rate equal to twenty percent of the maximum allowable level of THCE (*i.e.*, 1.0 g/km for a 5.0 g/km standard), or the maximum formaldehyde level allowed by a specific formaldehyde standard, whichever is less, the concentration of formaldehyde in the DNPH solution of the primary impinger, or solution resulting from the extraction of the DNPH cartridge, shall exceed either 2.5 mg/l or a concentration equal to 25 times the limit of detection for the HPLC analyzer.

(iii) The methanol and formaldehyde systems shall be designed such that the primary impinger collects at least 90 percent of the analyte in the samples. The remaining analyte shall be collected by the secondary impinger. This requirement does not apply to dilution air samples, since they do not require secondary impingers, or to samples in which the concentrations approach the limit of detection.

(c) *Component description, CFV-CVS.* The CFV-CVS sample system, Figure F90–2, consists of a dilution air filter and mixing assembly, a cyclone particulate separator, unheated sampling venturies for the bag samples, and for the methanol and formaldehyde samples from methanol-fueled vehicles, samples lines heated to prevent condensation for the methanol and formaldehyde samples from methanol fueled vehicles (heating of the sample lines may be omitted provided, the methanol and formaldehyde sample collection systems are close coupled to the probes thereby preventing loss of sample due to cooling and resulting condensation in the sample lines), a critical flow venturi, and assorted valves, and pressure and temperature sensors. The CFV sample system shall conform to the following requirements:

(1) Static pressure variations at the tailpipe(s) of the vehicle shall remain within ±1.25 kPa (5.02 in H_2O) of the static pressure variations measured during a dynamometer driving cycle with no connection to the tailpipe(s). (Sampling systems capable of maintaining the static pressure to within ±0.25 kPa (1.00 in H_2O) will be used by the Administrator if a written request substantiates the need for this closer tolerance.)

(2) The temperature measuring system shall have an accuracy and precision of ±1 °C (1.8 °F) and a response time of 0.100 second to 62.5 percent of a temperature change (as measured in hot silicone oil).

(3) The pressure measuring system shall have an accuracy and precision of ±0.4 kPa (±3 mm Hg).

(4) The location of the dilution air inlet shall be placed so as to use test-cell air for dilution and the flow capacity of the CVS shall be large enough to completely eliminate water condensation in the dilution and sampling systems. Control of water condensation with methanol-fueled vehicles is critical. Additional care may also be required to eliminate water condensation when testing natural gas and liquefied petroleum gas-fueled vehicles. (Procedures for determining CVS flow rates are detailed in ''Calculation of Emissions and Fuel Economy When Using Alternative Fuels,'' EPA 460/3–83–009.) Dehumidifying the dilution air before entering the CVS is allowed. Heating the dilution air is also allowed, provided:

(i) The air (or air plus exhaust gas) temperature does not exceed 250 °F.

(ii) Calculation of the CVS flow rate necessary to prevent water condensation is based on the lowest temperature encountered in the CVS prior to sampling. (It is recommended that the CVS system be insulated when heated dilution air is used.)

(iii) The dilution ratio is sufficiently high to prevent condensation in bag samples as they cool to room temperature.

(5) Sample collection bags for dilution air and exhaust samples (hydrocarbons and carbon monoxide) shall be of sufficient size so as not to impede sample flow. A single dilution air sample, covering the total test period, may be collected for the determination of methanol and formaldehyde background (methanol-fueled motorcycles).

(6) The methanol sample collection system and the formaldehyde sample collection system shall each be of sufficient capacity so as to collect samples of adequate size for analysis without

significant impact on the volume of dilute exhaust passing through the CVS. The systems shall also comply with the following requirements that apply to the design of the systems, not to individual tests:

(i) The methanol system shall be designed such that if a test motorcycle continuously emitted the maximum allowable level of methanol (based on all applicable standards) the measured concentration in the primary impinger would exceed either 25 mg/l or a concentration equal to 25 times the limit of detection for the GC analyzer.

(ii) The formaldehyde system shall be designed such that if a test motorcycle continuously emitted formaldehyde at a rate equal to twenty percent of the maximum allowable level of THCE (*i.e.*, 1.0 g/km for a 5.0 g/km standard), or the maximum formaldehyde level allowed by a specific formaldehyde standard, whichever is less, the concentration of formaldehyde in the DNPH solution of the primary impinger, or solution resulting from the extraction of the DNPH cartridge, shall exceed either 2.5 mg/l or a concentration equal to 25 times the limit of detection for the HPLC analyzer.

(iii) The methanol and formaldehyde systems shall be designed such that the primary impinger collects at least 90 percent of the analyte in the samples. The remaining analyte shall be collected by the secondary impinger. This requirement does not apply to dilution air samples, since they do not require secondary impingers, or to samples in which the concentrations approach the limit of detection.

(d) *Component description, CFV-EFC-CVS.* The CVS sample system is identical to the system described in paragraph (c) of this section, plus includes a means of electronically measuring the CVS flow rate, and electronic mass flow controllers for the methanol and formaldehyde sample lines, and separate flow meters to totalize sample flow volumes (optional). The EFC sample system shall conform to all of the requirements listed in paragraph (c) of this section, except that the methanol and formaldehyde samples mat both be drawn from a single static probe. It also must comply with the following additional requirements:

(1) The ratio of the CVS flow rate to the sample flow rate shall not deviate from the ratio at the start of the test by more than ±5 percent. (The volumetric sample flow rate shall be varied inversely with the square root of the bulk stream temperature.)

(2) Flow totalizers for methanol and/or formaldehyde samples shall have an accuracy of ±2 percent. Total sample volumes may be obtained from the flow controllers, with the advance approval of the administrator, provided that the controllers can be shown to have an accuracy of ±2 percent.

[54 FR 14539, Apr. 11, 1989, as amended at 59 FR 48512, Sept. 21, 1994; 60 FR 34351, June 30, 1995]

§ 86.511–90 Exhaust gas analytical system.

(a) *Schematic drawings.* Figure F90–3 is a schematic drawing of the exhaust gas analytical system for analysis of hydrocarbons (HC) (hydrocarbons plus methanol in the case of methanol-fueled motorcycles), carbon monoxide (CO), carbon dioxide (CO_2), and oxides of nitrogen (NO_X). Since various configurations can produce accurate results, exact conformance with the drawing is not required. Additional components such as instruments, valves, solenoids, pumps and switches may be used to provide additional information and coordinate the functions of the component systems

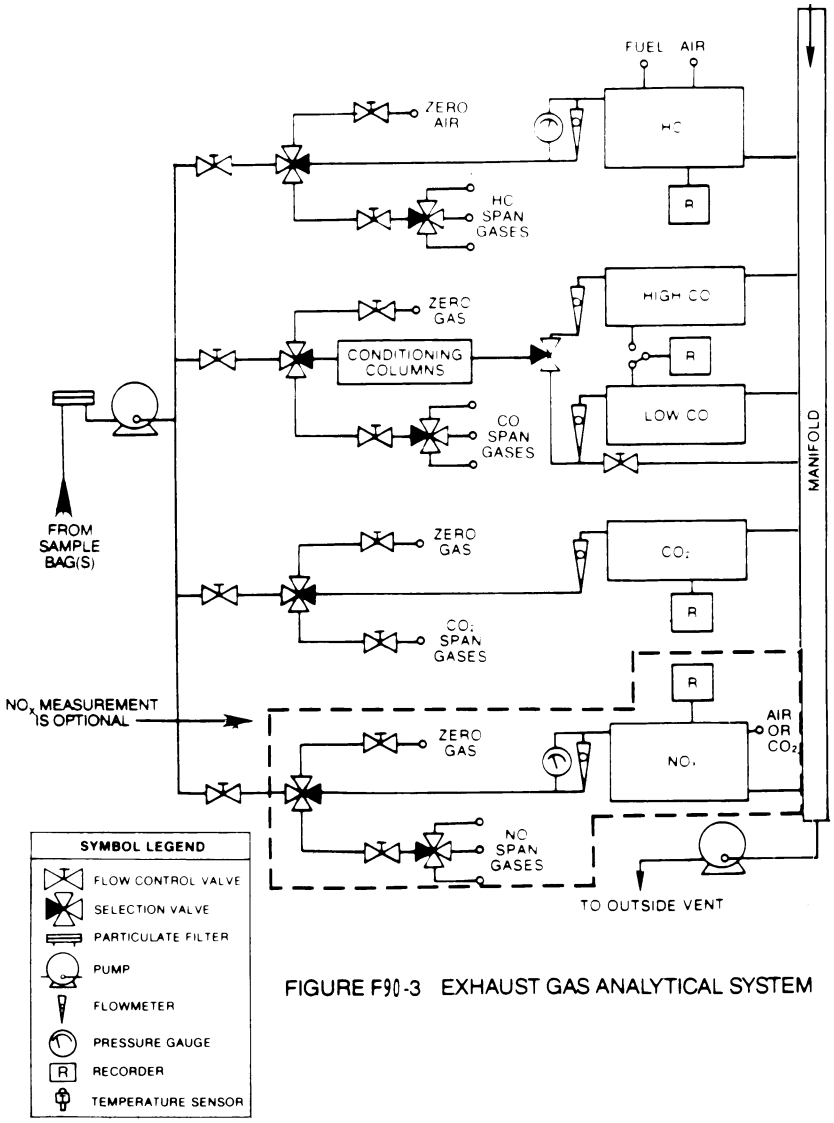

FIGURE F90-3 EXHAUST GAS ANALYTICAL SYSTEM

(b) *Major component description.* The exhaust gas analytical system for HC, CO and CO_2, Figure F90–3, consists of a flame ionization detector (FID) (heated (235°±15 °C (113°±8 °C)) for methanol-fueled vehicles) for the determination of hydrocarbons, nondispersive infrared analyzers (NDIR) for the determination of carbon monoxide and carbon dioxide and, if oxides of nitrogen are measured, a chemiluminescence analyzer (CL) for the determination of oxides of nitrogen. The analytical system for methanol consists of a gas chromatograph (GC) equipped with a flame ionization detector. The analysis for formaldehyde is performed using high pressure liquid chromatography (HPLC) of 2,4-

dinitrophenylhydrazine (DNPH) derivatives using ultraviolet (UV) detection. The exhaust gas analytical system shall conform to the following requirements:

(1) The CL requires that the nitrogen dioxide present in the sample be converted to nitric oxide before analysis. Other types of analyzers may be used if shown to yield equivalent results and if approved in advance by the Administrator.

(2) The carbon monoxide (CO) NDIR analyzer may require a sample conditioning column containing $CaSO_4$, or indicating silica gel to remove water vapor and containing ascarite to remove carbon dioxide from the CO analysis stream.

(i) If CO instruments which are essentially free of CO_2 and water vapor interference are used, the use of the conditioning column may be deleted, see §§ 86.522 and 86.544.

(ii) A CO instrument will be considered to be essentially free of CO_2 and water vapor interference if its response to a mixture of 3 percent CO_2 in N_2 which has been bubbled through water at room temperature produces an equivalent CO response, as measured on the most sensitive CO range, which is less than 1 percent of full scale CO concentration on ranges above 300 ppm full scale or less than 3 ppm on ranges below 300 ppm full scale; *see* § 86.522.

(c) *Other analyzers and equipment.* Other types of analyzers and equipment may be used if shown to yield equivalent results and if approved in advance by the Administrator.

[54 FR 14544, Apr. 11, 1989]

§ 86.513–87 Fuel and engine lubricant specifications.

(a) Gasoline having the following specifications will be used by the Administrator in exhaust emission testing. Gasoline having the following specifications or substantially equivalent specifications approved by the Administrator, shall be used by the manufacturer for emission testing except that the lead and octane specifications do not apply.

Item designation	ASTM	Leaded	Unleaded
Octane, research, min	D2699	100	93
Pb (organic), g/liter (g/U.S. gal.)	D3237	[1] 0.026 (0.100 max)	[1] 0.013 (0.050 max)
Distillation Range:	D86.		
IBP, °C (°F)		23.9–35 (75–95)	23.9–35 (75–95)
10 pct. point, °C (°F)		48.9–57.2 (120–135)	48.9–57.2 (120–135)
50 pct. point, °C (°F)		93.3–110 (200–230)	93.3–110 (200–230)
90 pct. point, °C (°F)		148.9–162.8 (300–325)	148.9–162.8 (300–325)
EP, °C (°F)		212.8(415)	212.8(415)
Sulfur, wt. pct., max	D1266	0.10	0.10
Phosphorus, g/liter (g/U.S. gal), max		0.0026 (0.01)	0.0013 (0.005)
RVP, KPa (psi)	D323	55.2–63.4 (8.0–9.2)	55.2–63.4 (8.0–9.2)
Hydrocarbon composition:			
Olefins, pct., max	D1319	10	10
Aromatics, pct., max		35	35
Saturates		([2])	([2])

[1] Maximum.
[2] Remainder.

(b)(1) Gasoline and engine lubricants representative of commercial fuels and engine lubricants which will be generally available through retail outlets shall be used in service accumulation.

(2) For leaded fuel the lead content shall not exceed 0.100 gram lead per gallon leaded gasoline.

(3) Where the Administrator determines that vehicles represented by a test vehicle will be operated using gasoline of different lead content than that prescribed in this paragraph, he may consent in writing to use a gasoline with a different lead content.

(4) The octane rating of the gasoline used shall be no higher than 4.0 research octane numbers above the minimum recommended by the manufacturer.

(5) The Reid Vapor Pressure of the fuel used shall be characteristic of the motor fuel during the season in which the service accumulation takes place.

(6) If the manufacturer specifies several lubricants to be used by the ultimate purchaser, the Administrator will select one to be used during service accumulation.

(c) The specification range of the fuels and engine lubricants to be used under paragraph (b) of this section shall be reported in accordance with § 86.416.

(d) The same lubricant(s) shall be used for both service accumulation and emission testing.

(e) Fuels not meeting the specifications set forth in this section may be used only with the advance approval of the Administrator.

[51 FR 24611, July 7, 1986, as amended at 52 FR 47869, Dec. 16, 1987]

§ 86.513–90 Fuel and engine lubricant specifications.

(a) Gasoline having the following specifications will be used by the Administrator in exhaust emission testing. Gasoline having the following specifications or substantially equivalent specifications approved by the Administrator, shall be used by the manufacturer for emission testing except that the octane specifications do not apply.

Item	ASTM	Value
Octane, research, minimum	D2699	96
Lead (organic):		
g/liter	D3237	[1] 0.013
(g/U.S. gal.)	.....	[1] (0.050)
Distillation range:		
IBP:		
°C	D86	23.9–35
(°F)	.....	(75–95)
10 pct. point:		
°C	D86	48.9–57.2
(°F)	.....	(120–135)
50 pct. point:		
°C	D86	93.3–110
(°F)	.....	(200–230)
90 pct. point:		
°C	D86	148.9–162.8
(°F)	.....	(300–325)
EP:		
°C max	D86	212.8
(°F)	.....	(415)
Sulfur, weight percent, maximum	D1266	0.10
Phosphorus:		
g/liter, max	D3231	0.0013
(g/U.S. gal)	.....	(0.005)
RVP, kPa (psi)	D323	55.2–63.4 (8.0–9.2)
Hydrocarbon composition:		
Olefins, percent, maximum	D1319	10
Aromatics, percent, maximum	D1319	35
Saturates	D1319	Remainder

[1] Maximum.

(b)(1) Unleaded gasoline and engine lubricants representative of commercial fuels and engine lubricants which will be generally available through retail outlets shall be used in service accumulation.

(2) The octane rating of the gasoline used shall be no higher than 4.0 Research octane numbers above the minimum recommended by the manufacturer.

(3) The Reid Vapor Pressure of the fuel used shall be characteristic of the motor fuel during the season in which the service accumulation takes place.

(4) If the manufacturer specifies several lubricants to be used by the ultimate purchaser, the Administrator will select one to be used during service accumulation.

(c) Methanol fuel used for exhaust and evaporative emission testing and in service accumulation of methanol-fueled motorcycle vehicles shall be representative of commercially available methanol fuel and shall consist of at least 50 percent methanol by volume.

(1) Manufacturers shall recommend the methanol fuel to be used for testing and service accumulation in accordance with paragraph (c).

(2) The Administrator shall determine the methanol fuel to be used for testing and service accumulation.

(d) Other methanol fuels may be used for testing and service accumulation provided:

(1) They are commercially available, and

(2) Information, acceptable to the Administrator, is provided to show that only the designated fuel would be used in customer service, and

(3) Use of a fuel listed under paragraph (a)(3) of this section would have a detrimental effect on emissions or durability, and

(4) Written approval from the Administrator of the fuel specifications must be provided prior to the start of testing.

(e) The specification range of the fuels and engine lubricants to be used under paragraph (b) of this section shall be reported in accordance with § 86.416.

(f) The same lubricant(s) shall be used for both service accumulation and emission testing.

(g) Fuels not meeting the specifications set forth in this section may be used only with the advance approval of the Administrator.

(h) *Mixtures of petroleum and methanol fuels for flexible fuel motorcycles.* (1) Mixtures of petroleum and methanol fuels used for exhaust and evaporative emission testing and service accumulation for flexible fuel motorcycles shall be within the range of fuel mixtures for which the vehicle was designed.

(2) Manufacturer testing and service accumulation may be performed using only those mixtures (mixtures may be different for exhaust testing, evaporative testing, and service accumulation) expected to result in the highest emissions, provided:

(i) The fuels which constitute the mixture will be used in customer service, and

(ii) Information, acceptable to the Administrator, is provided by the manufacturer to show that the designated fuel mixtures would result in the highest emissions, and

(iii) Written approval from the Administrator of the fuel specifications must be provided prior to the start of testing.

(3) The specification range of the fuels to be used under paragraph (h)(1) of this section shall be reported in accordance with § 86.090 21(b)(3).

[53 FR 476, Jan. 7, 1988, as amended at 54 FR 14546, Apr. 11, 1989]

§ 86.513–94 Fuel and engine lubricant specifications.

(a) *Gasoline.* (1) Gasoline having the following specifications will be used by the Administrator in exhaust emission testing of gasoline-fueled motorcycles. Gasoline having the following specifications or substantially equivalent specifications approved by the Administrator, shall be used by the manufacturer for emission testing except that the octane specifications do not apply.

Item	ASTM	Value
Octane, research, minimum	D2699	96
Lead (organic):		
g/liter (g/U.S. gal.)	D3237	[1]0.013 [1](0.050)
Distillation range:		
IBP: °C (°F)	D86	23.9–35 (75–95)
10 pct. point: °C (°F)	D86	48.9–57.2 (120–135)
50 pct. point: °C (°F)	D86	93.3–110 (200–230)
90 pct. point: °C (°F)	D86	148.9–162.8 (300–325)
EP: max. °C (°F)	D86	212.8 (415)
Sulfur, max. wt. %	D1266	0.10
Phosphorus: max. g/liter (g/U.S. gal.)	D3231	0.0013 (0.005)
RVP kPa (psi)	D323	55.2–63.4 (8.0–9.2)
Hydrocarbon composition:		
Olefins, max., %	D1319	10
Aromatics, max., %	D1319	35
Saturates	D1319	Remainder

[1] Maximum.

(2) Unleaded gasoline and engine lubricants representative of commercial fuels and engine lubricants which will be generally available through retail outlets shall be used in service accumulation.

(3) The octane rating of the gasoline used shall be no higher than 4.0 Research octane numbers above the minimum recommended by the manufacturer.

(4) The Reid Vapor Pressure of the gasoline used shall be characteristic of commercial gasoline fuel during the season in which the service accumulation takes place.

(b) *Methanol fuel.* (1) Methanol fuel used for exhaust and evaporative emission testing and in service accumulation of methanol-fueled motorcycles shall be representative of commercially available methanol fuel and shall consist of at least 50 percent methanol by volume.

(2) Manufacturers shall recommend the methanol fuel to be used for testing and service accumulation in accordance with paragraph (b)(1) of this section.

(3) The Administrator shall determine the methanol fuel to be used for testing and service accumulation.

(4) Other methanol fuels may be used for testing and service accumulation provided:

(i) They are commercially available; and

(ii) Information, acceptable to the Administrator, is provided to show that only the designated fuel would be used in customer service; and

(iii) Use of a fuel listed under paragraphs (b)(1), (b)(2) or (b)(3) of this section would have a detrimental effect on emissions or durability; and

(iv) Written approval from the Administrator of the fuel specifications must be provided prior to the start of testing.

(c) *Mixtures of petroleum and methanol fuels for flexible fuel motorcycles.* (1) Mixtures of petroleum and methanol fuels used for exhaust and evaporative emission testing and service accumulation for flexible fuel motorcycles shall consist of the petroleum fuel listed in paragraph (a) of this section and the methanol fuel listed in paragraph (b), and shall be within the range of fuel mixtures for which the vehicle was designed, as reported in accordance with § 86.90–21. The Administrator may use any fuel or fuel mixture within this range for testing.

(2) The fuel mixtures used by the manufacturers shall be sufficient to demonstrate compliance over the full design range, and shall include:

(i) For emission testing,

(A) The petroleum fuel specified in paragraph (a) or (b),

(B) A methanol fuel representative of the methanol fuel expected to the found in use, as specified in paragraph (b),

(ii) For service accumulation, an alternating combination of the fuels specified in paragraphs (a) and (b) will be used to demonstrate the durability of the emission control systems based on good engineering judgement. The combination shall be selected such that the cumulative volumes of both the methanol fuel and the petroleum fuel used shall be at least twenty-five percent of the total fuel volume. The fuels shall be alternated at mileage intervals not to exceed 1,000 kilometers.

(3) The specification range of the fuels to be used under paragraph (c) of this section shall be reported in accordance with § 86.094–21.

(d) *Natural gas-fuel.* (1) Natural gas-fuel having the following specifications will be used by the Administrator for exhaust and evaporative emission testing of natural gas-fueled motorcycles. Natural gas-fuel having the following specifications or substantially similar specifications approved by the Administrator, shall be used by the manufacturer for emission testing.

NATURAL GAS CERTIFICATION FUEL SPECIFICATIONS

Item		ASTM test method No.	Value
Methane	min. mole pct.	D1945	89.0
Ethane	max. mole pct.	D1945	4.5
C_3 and higher	max. mole pct.	D1945	2.3
C_6 and higher	max. mole pct.	D1945	0.2
Oxygen	max. mole pct.	D1945	0.6
Inert gases:			
Sum of CO_2 and N_2	max. mole pct.	D1945	4.0
Odorant [1]			

[1] The natural gas at ambient conditions must have a distinctive odor potent enough for its presence to be detected down to a concentration in air of not over 1/5 (one-fifth) of the lower limit of flammability.

(2) Natural gas-fuel and engine lubricants representative of commercial fuels and engine lubricants which will be generally available through retail outlets shall be used in service accumulation.

(3) Other natural gas-fuels may be used for testing and service accumulation provided:

(i) They are commercially available;

(ii) Information, acceptable to the Administrator, is provided to show that only the designated fuel would be used in customer service;

(iii) Written approval from the Administrator of the fuel specifications must be provided prior to the start of testing.

(e) *Liquefied petroleum gas-fuel.* (1) Liquefied petroleum gas-fuel used for exhaust and evaporative emission testing and in service accumulation of liquefied petroleum gas-fueled motorcycles shall be commercially available liquefied petroleum gas-fuel.

(2) Manufacturers shall recommend the liquefied petroleum gas-fuel to be used for testing and service accumulation in accordance with paragraph (e)(1) of this section.

(3) The Administrator shall determine the liquefied petroleum gas-fuel to be used for testing and service accumulation.

(4) Other liquefied petroleum gas-fuels may be used for testing and service accumulation provided:

(i) They are commercially available;

(ii) Information, acceptable to the Administrator, is provided to show that only the designated fuel would be used in customer service; and

(iii) Written approval from the Administrator of the fuel specifications must be provided prior to the start of testing.

(f) *Lubricants.* (1) If the manufacturer specifies several lubricants to be used by the ultimate purchaser, the Administrator will select one to be used during service accumulation.

(2) The same lubricant(s) shall be used for both service accumulation and emission testing.

(g) The specification range of the fuels and of the engine lubricants to be used under paragraphs (a), (b), (c), (d) and (e) of this section shall be reported in accordance with § 86.416.

(h) Written approval from the Administrator of the fuel and lubricant specifications must be provided prior to the start of testing.

[59 FR 48512, Sept. 21, 1994, as amended at 60 FR 34354, June 30, 1995]

§ 86.513–2004 Fuel and engine lubricant specifications.

Section 86.513–2004 includes text that specifies requirements that differ from § 86.513–94. Where a paragraph in § 86.513–94 is identical and applicable to § 86.513–2004, this may be indicated by specifying the corresponding paragraph and the statement ''[Reserved]. For guidance see § 86.513–94.'' Where a corresponding paragraph of § 86.513–94 is not applicable, this is indicated by the statement ''[Reserved].''

(a) *Gasoline.* (1) Gasoline having the following specifications will be used by the Administrator in exhaust emission testing of gasoline-fueled motorcycles. Gasoline having the following specifications or substantially equivalent specifications approved by the Administrator, shall be used by the manufacturer for emission testing except that the octane specifications do not apply.

TABLE 1 OF § 86.513–2004—GASOLINE TEST FUEL SPECIFICATIONS

Item	Procedure	Value
Distillation Range:		
1. Initial boiling point, °C	ASTM D 86–97	23.9—35.0 [1]
2. 10% point, °C	ASTM D 86–97	48.9—57.2
3. 50% point, °C	ASTM D 86–97	93.3—110.0
4. 90% point, °C	ASTM D 86–97	148.9—162.8
5. End point, °C	ASTM D 86–97	212.8
Hydrocarbon composition:		
1. Olefins, volume %	ASTM D 1319–98	10 maximum
2. Aromatics, volume %	ASTM D 1319–98	35 maximum
3. Saturates	ASTM D 1319–98	Remainder
Lead (organic), g/liter	ASTM D 3237	0.013 maximum
Phosphorous, g/liter	ASTM D 3231	0.0013 maximum
Sulfur, weight %	ASTM D 1266	0.008 maximum
Volatility (Reid Vapor Pressure), kPa	ASTM D 323	55.2 to 63.4 [1]

[1] For testing at altitudes above 1,219 m, the specified volatility range is 52 to 55 kPa and the specified initial boiling point range is (23.9 to 40.6) °C.

(2) Unleaded gasoline and engine lubricants representative of commercial fuels and engine lubricants which will be generally available through retail outlets shall be used in service accumulation.

(3) The octane rating of the gasoline used shall be no higher than 4.0 Research octane numbers above the minimum recommended by the manufacturer.

(4) The Reid Vapor Pressure of the gasoline used shall be characteristic of commercial gasoline fuel during the season in which the service accumulation takes place.

(b) through (d) [Reserved]. For guidance *see* § 86.513–94.

[69 FR 2441, Jan. 15, 2004, as amended at 70 FR 40437, July 13, 2005]

§ 86.514–78 Analytical gases.

(a) *Analyzer gases.* (1) Gases for the CO and CO_2 analyzers shall be single blends of CO and CO_2 respectively using nitrogen as the diluent.

(2) Gases for the THC analyzer shall be:

(i) Single blends of propane using air as the diluent; and

(ii) Optionally, for response factor determination, single blends of methanol using air as the diluent.

(3) Gases for the NO_X analyzer shall be single blends of NO named as NO_X with a maximum NO_2 concentration of 5 percent of the nominal value using nitrogen as the diluent.

(4) [Reserved]

(5) The allowable zero gas (air or nitrogen) impurity concentrations shall not exceed 1 ppm equivalent carbon response, 1 ppm carbon monoxide, 0.04 percent (400 ppm) carbon dioxide, and 0.1 ppm nitric oxide.

(6) ''Zero grade air'' includes artificial ''air'' consisting of a blend of nitrogen and oxygen with oxygen concentrations between 18 and 21 mole percent.

(7) The use of proportioning and precision blending devices to obtain the required analyzer gas concentrations is allowable provided their use has been approved in advance by the Administrator.

(b) Calibration gases (not including methanol) shall be known to within 2 percent of true values.

(c) Methanol in air gases used for response factor determination shall:

(1) Be traceable to within ±2 percent of NIST (formerly NBS) gas standards, or other gas standards which have been approved by the Administrator; and

(2) Remain within ±2 percent of the labeled concentration. Demonstration of stability shall be based on a quarterly measurement procedure with a precision of ±2 percent (two standard deviations), or other method approved by the Administrator. The measurement procedure may incorporate multiple measurements. If the true concentration of the gas changes by more than two percent, but less than ten percent, the gas may be relabeled with the new concentration.

[42 FR 1137, Jan. 5, 1977, as amended at 60 FR 34354, June 30, 1995]

§ 86.515–78 EPA urban dynamometer driving schedule.

(a) The dynamometer driving schedules are listed in appendix I. The driving schedules are defined by a smooth trace drawn through the specified speed vs. time relationships. They consist of a nonrepetitive series of idle, acceleration, cruise, and deceleration modes of various time sequences and rates. Appropriate driving schedules are as follows:

Class I—Appendix I(c)
Class II—Appendix I(b)
Class III—Appendix I(b)

(b) The speed tolerance at any given time on the dynamometer driving schedule prescribed in appendix I or as printed on a driver's aid chart approved by the Administrator, when conducted to meet the requirements of § 86.537 is defined by upper and lower limits. The upper limit is 3.2 km/h (2 mph) higher than the highest point on the trace within 1 second of the given time. The lower limit is 3.2 km/h (2 mph) lower than the lowest point on the trace within 1 second of the given time. Speed variations greater than the tolerances (such as may occur during gear changes) are acceptable provided they occur for less than 2 seconds on any occasion. Speeds lower than those prescribed are acceptable provided the vehicle is operated at maximum available power during such occurrences. When conducted to meet the requirements of § 86.532 the speed tolerance shall be as specified above, except that the upper and lower limits shall be 6.4 km/h (4 mph).

(c) Figure F78–4 shows the range of acceptable speed tolerances for typical points. Figure F78–4(a) is typical of portions of the speed curve which are increasing or decreasing throughout the two second time interval. Figure F78–4(b) is typical of portions of the speed curve which include a maximum or minimum value.

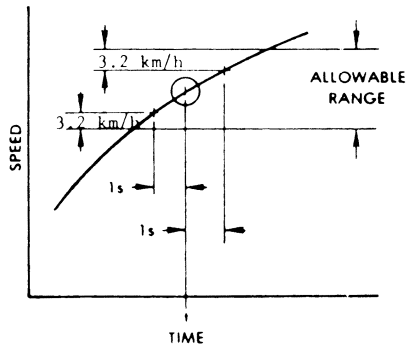

FIGURE F78-4a—DRIVERS TRACE, ALLOWABLE RANGE

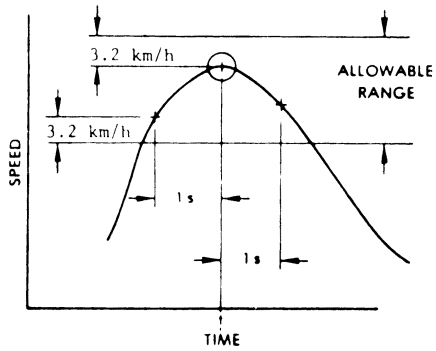

FIGURE F78-4b—DRIVERS TRACE, ALLOWABLE RANGE

(d) For motorcycles with an engine displacement less than 50 cc and a top speed less than 58.7 km/hr (36.5 mph), the speed indicated for each second of operation on the applicable Class I driving trace (speed versus time sequence) in appendix I(c) shall be adjusted downward by the ratio of actual top speed to specified maximum test speed. Calculate the ratio with three significant figures by dividing the top speed of the motorcycle in km/hr by 58.7. For example, for a motorcycle with a top speed of 48.3 km/hr (30 mph), the ratio would be 48.3/58.7 = 0.823. The top speed to be used under this section shall be indicated in the manufacturer's application for certification, and shall be the highest sustainable speed of the motorcycle with an 80 kg rider on a flat paved surface. If the motorcycle is equipped with a permanent speed governor that is unlikely to be removed in actual use, measure the top speed in the governed configuration; otherwise measure the top speed in the ungoverned configuration.

[42 FR 1137, Jan. 5, 1977, as amended at 69 FR 2441, Jan. 15, 2004]

§ 86.516–90 Calibrations, frequency and overview.

(a) Calibrations shall be performed as specified in §§ 86.517 through 86.526.

(b) [Reserved]

(c) At least monthly or after any maintenance which could alter calibration, the following calibrations and checks shall be performed:

(1) Calibrate the hydrocarbon analyzer, methane analyzer, carbon dioxide analyzer, carbon monoxide analyzer, and oxides of nitrogen analyzer (certain analyzers may require more frequent calibration depending on particular equipment and uses).

(2) Calibrate the dynamometer. If the dynamometer receives a weekly performance check (and remains within calibration), the monthly calibration need not be performed.

(3) Check the oxides of nitrogen converter efficiency.

(d) At least weekly or after any maintenance which could alter calibration, the following calibrations and checks shall be performed:

(1) [Reserved]

(2) Perform a CVS system verification, and

(3) Run a performance check on the dynamometer. This check may be omitted if the dynamometer has been calibrated within the preceding month.

(e) The CVS positive displacement pump or Critical Flow Venturi shall be calibrated following initial installation, major maintenance or as necessary when indicated by the CVS system verification (described in § 86.519).

(f) Sample conditioning columns, if used in the CO analyzer train, should be checked at a frequency consistent with observed column life or when the indicator of the column packing begins to show deterioration.

[54 FR 14546, Apr. 11, 1989, as amended at 58 FR 58423, Nov. 1, 1993; 60 FR 34354, June 30, 1995]

§ 86.518–78 Dynamometer calibration.

(a) The dynamometer shall be calibrated at least once each month or performance verified at least once each

week and then calibrated as required. The dynamometer is driven above the test speed range. The device used to drive the dynamometer is then disengaged from the dynamometer and the roll is allowed to coast down. The kinetic energy of the system is dissipated by the dynamometer. This method neglects the variations in roll bearing friction due to the drive axle weight of the vehicle.

(b) Calibration shall consist of coasting down the dynamometer for each inertia load combination used. Coastdown times for the interval from 70 to 60 km/h shall be within the tolerances specified in § 86.529. The dynamometer adjustments necessary to produce these results shall be noted for future reference.

(c) The performance check consists of conducting a dynamometer coastdown at one or more inertia-horsepower settings and comparing the coastdown time to the table in Figure F98–9 of § 86.529–98. If the coastdown time is outside the tolerance, a new calibration is required.

[42 FR 1137, Jan. 5, 1977, as amended at 63 FR 11849, Mar. 11, 1998]

§ 86.519–78 Constant volume sampler calibration.

The CVS (Constant Volume Sampler) is calibrated using an accurate flowmeter and restrictor valve. Measurements of various parameters are made and related to flow through the unit. Procedures used by EPA for both PDP (Positive Displacement Pump) and CFV (Critical Flow Venturi) are outlined below. Other procedures yielding equivalent results may be used if approved in advance by the Administrator. After the calibration curve has been obtained, verification of the entire system can be performed by injecting a known mass of gas into the system and comparing the mass indicated by the system to the true mass injected. An indicated error does not necessarily mean that the calibration is wrong, since other factors can influence the accuracy of the system, e.g. analyzer calibration. A verification procedure is found in paragraph (c) of this section.

(a) *PDP calibration.* (1) The following calibration procedure outlines the equipment, the test configuration, and the various parameters which must be measured to establish the flow rate of the constant volume sampler pump. All the parameters related to the pump are simultaneously measured with the parameters related to a flowmeter which is connected in series with the pump. The calculated flow rate (at pump inlet absolute pressure and temperature) can then be plotted versus a correlation function which is the value of a specific combination of pump parameters. The linear equation which relates the pump flow and the correlation function is then determined. In the event that a CVS has a multiple speed drive, a calibration for each range used must be performed.

(2) This calibration procedure is based on the measurement of the absolute values of the pump and flowmeter parameters that relate the flow rate at each point. Three conditions must be maintained to assure the accuracy and integrity of the calibration curve. First, the pump pressures should be measured at taps on the pump rather than at the external piping on the pump inlet and outlet. Pressure taps that are mounted at the top center and bottom center of the pump drive headplate are exposed to the actual pump cavity pressures, and therefore reflect the absolute pressure differentials. Secondly, temperature stability must be maintained during the calibration. The laminar flowmeter is sensitive to inlet temperature oscillations which cause the data points to be scattered. Gradual changes (±1 °C (1.8 °F)) in temperature are acceptable as long as they occur over a period of several minutes. Finally, all connections between the flowmeter and the CVS pump must be absolutely void of any leakage.

(3) During an exhaust emission test the measurement of these same pump parameters enables the user to calculate the flow rate from the calibration equation.

(4) Connect a system as shown in Figure F78–5. Although particular types of equipment are shown, other configurations that yield equivalent results may be used if approved in advance by the

Administrator. For the system indicated, the following data with given accuracy are required:

CALIBRATION DATA MEASUREMENTS

Parameter	Symbol	Units	Tolerances
Barometric pressure (corrected)	P_B	kPa (in. Hg)	±0.03 kPa (±0.01 in. Hg).
Ambient temperature	T_A	°C (°F)	±0.3 °C (±0.54 °F).
Air temperature into LFE	ETI	°C (F)	±0.15 °C (±0.27 °F).
Pressure depression upstream of LFE	EPI	kPa (in. H_2O)	±0.01 kPa (±0.05 in. H_2O).
Pressure drop across the LFE matrix	EDP	kPa (in. H_2O)	±0.001 kPa (±0.005 in. H_2O).
Air temperature at CVS pump inlet	PTI	°C (°F)	±0.25 °C (±0.45 °F).
Pressure depression at CVS pump inlet	PPI	kPa (in. Fluid)	±0.021 kPa (±0.046 in. Fluid).
Specific gravity of manometer fluid (1.75 oil)	Sp. Gr.		
Pressure head at CVS pump outlet	PPO	kPa (in. Fluid)	±0.021 kPa (±0.046 in. Fluid).
Air temperature at CVS pump outlet (optional)	PTO	°C (°F)	±0.25 °C (±0.45 °F).
Pump revolutions during test period	N	Revs	±1 Rev.
Elapsed time for test period	t	s	±0.05 s.

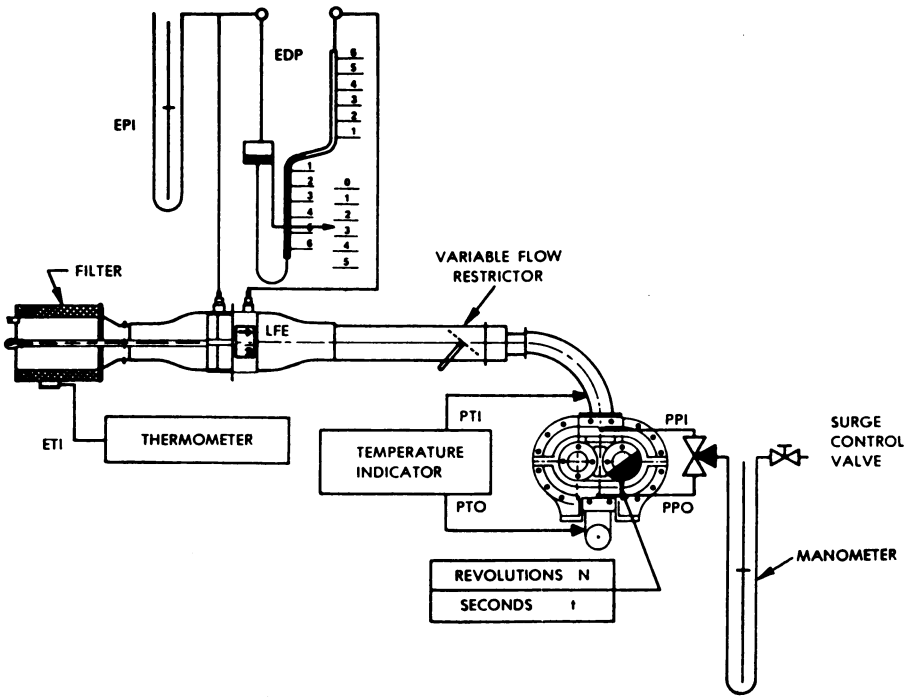

F78–5 —PDP-CVS CALIBRATION CONFIGURATION

(5) After the system has been connected as shown in Figure F78–5, set the variable restrictor in the wide open position and run the CVS pump for twenty minutes. Record the calibration data.

(6) Reset the restrictor valve to a more restricted condition in an increment of pump inlet depression (about 1.0 kPa (4″ H_2O)) that will yield a minimum of six data points for the total calibration. Allow the system to stabilize for 3 minutes and repeat the data acquisition.

(7) *Data analysis:* (i) The air flow rate, Q_s, at each test point is calculated from the flowmeter data using the manufacturer's prescribed method.

(ii) The air flow rate is then converted to pump flow, V_o, per revolution at absolute pump inlet temperature and pressure.

$$V_o = (Q_s/n) \times (T_p/293.15) \times (101.325/P_p)$$

where:

V_o = Pump flow, m^3/revolution (ft^3/revolution) at T_p, P_p

Q_s = Meter air flow rate in standard cubic metres per minute, standard conditions are 20 °C, 101.325 kPa (68 °F, 29.92 in. Hg).

n = Pump speed in revolutions per minute.

T_p = Pump inlet temperature, K(R) = PTI + 273.15 for English units, T_p = PTI + 459.67

P_p = Absolute pump inlet pressure, kPa (in. Hg) = P_B − PPI for English units, P_p = P_B − PPI (SP. GR./13.57)

where:

P_B = barometric pressure, kPa (in. Hg)

PPI = Pump inlet depression, kPa (in. fluid)

SP. GR. = Specific gravity of manometer fluid relative to water.

(iii) The correlation function at each test point is then calculated from the calibration data:

$$X_o = \frac{1}{n}\sqrt{\frac{\Delta P_p}{P_e}}$$

where:

X_o = correlation function.

P_p = The pressure differential from pump inlet to pump outlet, kPa (in. Hg) = $P_e - P_p$

P_e = Absolute pump outlet pressure, kPa (in. Hg) = P_B + PPO for English units, P_e = P_B + PPO(SP. GR./13.57)

where:

PPO = Pressure head at pump outlet, kPa (in. fluid)

(iv) A linear least squares fit is performed to generate the calibration equations which have the forms:

$$V_o = D_o - M(X_o)$$
$$n = A - B(P_p)$$

D_o, M, A, and B are the slope-intercept constants describing the lines.

(8) A CVS system that has multiple speeds shall be calibrated on each speed used. The calibration curves generated for the ranges will be approximately parallel and the intercept values, D_O, will increase as the pump flow range decreases.

(9) If the calibration has been performed carefully, the calculated values from the equation will be within ±0.50 percent of the measured value of V_O. Values of M will vary from one pump to another, but values of D_O for pumps of the same make, model, and range should agree within ±3 percent of each other. Particulate influx from use will cause the pump slip to decrease as reflected by lower values for M. Calibrations should be performed at pump startup and after major maintenance to assure the stability of the pump slip rate. Analysis of mass injection data will also reflect pump slip stability.

(b) *CFV calibration*. (1) Calibration of the Critical Flow Venturi (CFV) is based upon the flow equation for a critical venturi. Gas flow is a function of inlet pressure and temperature:

$$Q_s = \frac{K_v P}{\sqrt{T}}$$

where:

Q_s = Flow

K_v = Calibration coefficient

P = Absolute pressure

T = Absolute temperature

The calibration procedure described below establishes the value of the calibration coefficient at measured values of pressure, temperature and air flow.

(2) The manufacturer's recommended procedure shall be followed for calibrating electronic portions of the CFV.

(3) Measurements necessary for flow calibration are as follows:

CALIBRATION DATA MEASUREMENTS

Parameter	Symbol	Units	Tolerances
Barometric pressure (corrected)	P_B	kPa (in. Hg)	±0.03 kPa (±0.01 in. Hg).
Air temperature, flowmeter	ETI	°C (°F)	±0.15 °C (±0.27 °F).
Pressure depression upstream of LFE	EPI	kPa (in. H_2O)	±0.01 kPa (±0.05 in. H_2O).
Pressure drop across LFE matrix	EDP	kPa (in. H_2O)	±0.001 kPa (±0.005 in. H_2O).
Air flow	Q_s	m^3/min. (ft^3/min)	±0.5%.
CFV inlet depression	PPI	kPa (in. fluid)	±0.02 kPa (±0.05 in. fluid).
Temperature at venturi inlet	T_V	°C (°F)	±0.25 °C (±0.45 °F).
Specific gravity of manometer fluid (1.75 oil)	Sp. Gr..		

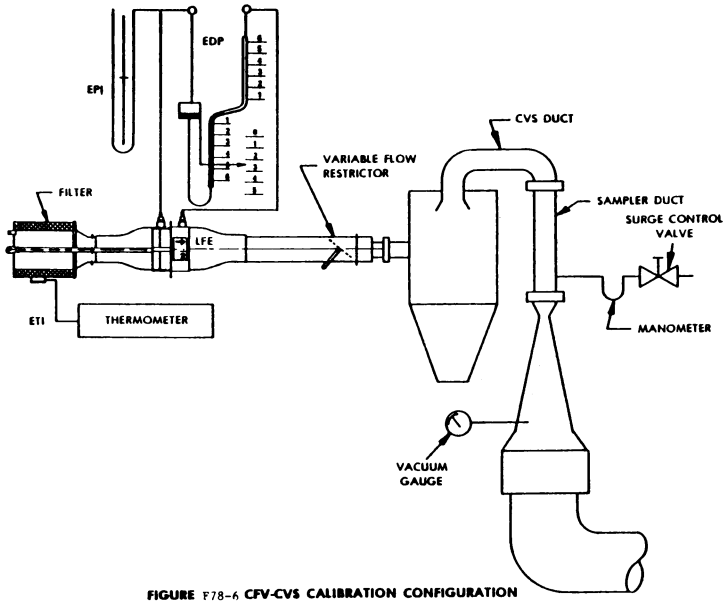

FIGURE F78–6 CFV-CVS CALIBRATION CONFIGURATION

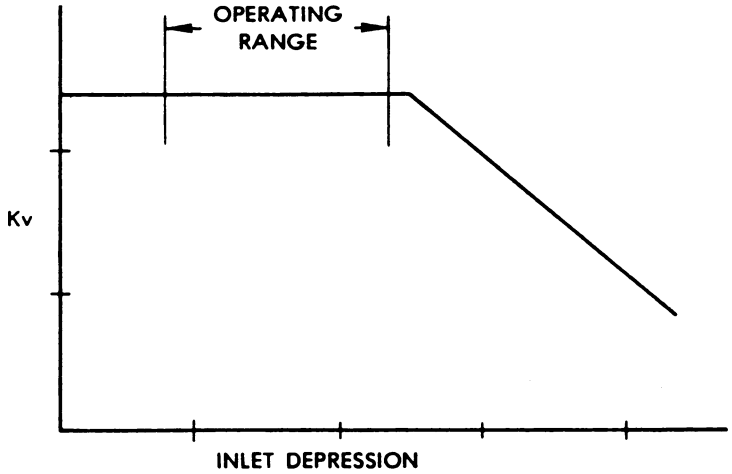

FIGURE F78–7 –SONIC FLOW CHOKING

(4) Set up equipment as shown in Figure F78–6 and check for leaks. Any leaks between the flow measuring device and the critical flow venturi will seriously affect the accuracy of the calibration.

(5) Set the variable flow restrictor to the open position, start the blower and allow the system to stabilize. Record data from all instruments.

(6) Vary the flow restrictor and make at least 8 readings across the critical flow range of the venturi.

(7) *Data analysis.* The data recorded during the calibration are to be used in the following calculations:

(i) The air flow rate, Q_s, at each test point is calculated from the flow meter data using the manufacturer's prescribed method.

(ii) Calculate values of the calibration coefficient for each test point:

$$K_v = \frac{Q_s \sqrt{T_v}}{P_v}$$

where:

Q_s = Flow rate, standard conditions are 20 °C, 101.325 kPa (68 °F, 29.92 in. Hg)

T_v = Temperature at venturi inlet, K(R).

P_v = Pressure at venturi inlet, kPa (mm Hg) = $P_B - PPI$ for English units $P_v = P_B -$ PPI (SP. GR./13.57).

where:

PPI = Venturi inlet pressure depression, kPa (in. fluid).

SP. GR. = Specific gravity of manometer fluid, relative to water.

(iii) Plot K_v as a function of venturi inlet depression. For sonic flow, K_v will have a relatively constant value. As pressure decreases (vacuum increases), the venturi becomes unchoked and K_v decreases (is no longer constant). See Figure F78–7.

(iv) For a minimum of 8 points in the critical region calculate an average K_v and the standard deviation.

(v) If the standard deviation exceeds 0.3 percent of the average K_v take corrective action.

(c) *CVS System Verification*. The following ''gravimetric'' technique can be used to verify that the CVS and analytical instruments can accurately measure a mass of gas that has been injected into the system. (Verification can also be accomplished by constant flow metering using critical flow orifice devices.)

(1) Obtain a small cylinder that has been charged with pure propane or carbon monoxide gas (caution—carbon monoxide is poisonous).

(2) Determine a reference cylinder weight to the nearest 0.01 grams.

(3) Operate the CVS in the normal manner and release a quantity of pure propane or carbon monoxide into the system during the sampling period (approximately 5 minutes).

(4) The calculations of § 86.544 are performed in the normal way except in the case of propane. The density of propane (0.6109 kg/m^3/carbon atom (17.30 g/ft^3/carbon atom)) is used in place of the density of exhaust hydrocarbons. In the case of carbon monoxide, the density of 1.164 kg/m^3 (32.97 g/ft^3) is used.

(5) The gravimetric mass is subtracted from the CVS measured mass and then divided by the gravimetric mass to determine the percent accuracy of the system.

(6) The cause for any discrepancy greater than ±2 percent must be found and corrected.

[42 FR 1137, Jan. 5, 1977, as amended at 42 FR 56738, Oct. 28, 1977]

§ 86.519–90 Constant volume sampler calibration.

(a) The CVS (Constant Volume Sampler) is calibrated using an accurate flowmeter and restrictor valve. Measurements of various parameters are made and related to flow through the unit. Procedures used by EPA for both PDP (Positive Displacement Pump) and CFV (Critical Flow Venturi) are outlined below. Other procedures yielding equivalent results may be used if approved in advance by the Administrator. After the calibration curve has been obtained, verification of the entire system can be performed by injecting a known mass of gas into the system and comparing the mass indicated by the system to the true mass injected. An indicated error does not necessarily mean that the calibration is wrong, since other factors can influence the accuracy of the system, e.g., analyzer calibration. A verification procedure is found in paragraph (d) of this section.

(b) *PDP calibration*. (1) The following calibration procedures outlines the equipment, the test configuration, and the various parameters which must be measured to establish the flow rate of the constant volume sampler pump. All the parameters related to the pump are simultaneously measured with the parameters related to a flowmeter which is connected in series with the pump. The calculated flow rate (at pump inlet absolute pressure and temperature) can then be plotted versus a correlation function which is the value of a specific combination of pump parameters. The linear equation which relates the pump flow and the correlation function is then determined. In the event that a

CVS has a multiple speed drive, a calibration for each range must be performed.

(2) This calibration procedure is based on the measurement of the absolute values of the pump and flowmeter parameters that relate the flow rate at each point. Three conditions must be maintained to assure the accuracy and integrity of the calibration curve. First, the pump pressures should be measured at taps on the pump rather than at the external piping on the pump inlet and outlet. Pressure taps that are mounted at the top center and bottom center of the pump drive headplate are exposed to the actual pump cavity pressures, and therefore reflect the absolute pressure differentials. Secondly, temperature stability must be maintained during the calibration. The laminar flowmeter is sensitive to inlet temperature oscillations which cause the data points to be scattered. Gradual changes (±1 °C (±1.8 °F)) in temperature are acceptable as long as they occur over a period of several minutes. Finally, all connections between the flowmeter and the CVS pump must be absolutely void of any leakage.

(3) During an exhaust emission test the measurement of these same pump parameters enables the user to calculate the flow rate from the calibration equation.

(4) Connect a system as shown in Figure F78–5. Although particular types of equipment are shown, other configurations that yield equivalent results may be used if approved in advance by the Administrator. For the system indicated, the following data with given accuracy are required:

CALIBRATION DATA MEASUREMENTS

Parameter	Symbol	Units	Tolerances
Barometric pressure corrected	P_B	kPa (in. Hg)	±0.03 kPa (±0.01 in. Hg)
Ambient temperature	T_A	°C (°F)	±0.3 °C (±0.54 °F)
Air Temperature into LFE	ETI	°C (°F)	±0.15 °C (±0.27 °F)
Pressure depression upstream of LFE	EPI	kPa (in. H_2O)	±0.01 kPa (±0.05 in. H_2O)
Pressure drop across the LFE matrix	EDP	kPa (in. H_2O)	±0.001 kPa (±0.005 in. H_2O)
Air temperature at CVS pump inlet	PTI	°C (°F)	±0.25 °C (±0.45 °F)
Pressure depression at CVS pump inlet	PPI	kPa (in. Fluid)	±0.021 kPa (±0.046 in. Fluid)
Specific gravity of manometer fluid (1.75 oil).	Sp Gr		
Pressure head at CVS pump outlet	PPO	kPa (in. Fluid)	±0.21 kPa (±0.046 in. Fluid)
Air temperature at CVS pump outlet (optional)	PTO	°C (°F)	±0.25 °C (±0.45 °F)
Pump revolutions during test period	N	Revs	±I Rev.
Elapsed time for test period	t	sec.	±0.05 sec.

(5) After the system has been connected as shown in Figure F78–6, set the variable restrictor in the wide open position and run the CVS pump for twenty minutes. Record the calibration data.

(6) Reset the restrictor valve to a more restricted condition in an increment of pump inlet depression (about 1.0 kPa (4 in. H_2O)) that will yield a minimum of six data points for the total calibration. Allow the system to stabilize for 3 minutes and repeat the data acquisition.

(7) Data analysis:

(i) The air flow rate, Q_s, at each test point is calculated from the flowmeter data using the manufacturers' prescribed method.

(ii) The air flow rate is then converted to pump flow, V_o in m^3 per revolution at absolute pump inlet temperature and pressure.

$$V_o = (Q_s/n) \times (T_p/293) \times (101.3/P_p)$$

Where:

(A) V_o = Pump flow, m^3/rev (ft^3/rev) at T_p, P_p.

(B) Q_s = Meter air flow rate in standard cubic meters per minute; standard conditions are 20 °C, 101.3 kPa (68 °F, 29.92 in. Hg).

(C) n = Pump speed in revolutions per minute.

(D)(*1*) T_p = Pump inlet temperature, (°K) = PTI + 273.

(*2*) *For English units,* T_p = PTI + 460.

(E)(*1*) P_p = Absolute pump inlet pressure, kPa (in. Hg) = P_B − PPI.

(*2*) *For English units,* P_p = P_B − PPI(SP.GR./13.57).

Where:

(F) P_B = barometric pressure, kPa (in. Hg.).

(G) PPI = Pump inlet depression, kPa (in. fluid).

(H) SP.GR. = Specific gravity of manometer fluid relative to water.

(iii) The correlation function at each test point is then calculated from the calibration data:

$$X_o = \frac{1}{n}\sqrt{\frac{\Delta P_p}{P_e}}$$

Where:

(A) X_o = correlation function.

(B) ΔP_p = The pressure differential from pump inlet to pump outlet, kPa (in. Hg) = $P_e - P_p$.

(C)(*1*) P_e = Absolute pump outlet pressure, kPa (in. Hg) = P_B + PPO.

(*2*) *For English units,* P_e = P_B + PPO(SP.GR./13.57).

Where:

(D) PPO = Pressure head at pump outlet, kPa (in. fluid).

(iv) A linear least squares fit is performed to generate the calibration equations which have the forms:

$V_o = D_o - M(X_o)$

$n = A - B(\Delta P_p)$

D_0' M, A, and B are the slope-intercept constants, describing the lines.

(8) A CVS system that has multiple speeds shall be calibrated on each speed used. The calibration curves generated for the ranges will be approximately parallel and the intercept values, D_0' will increase as the pump flow range decreases.

(9) If the calibration has been performed carefully, the calculated values from the equation will be within ±0.50 percent of the measured value of V_o. Values of M will vary from one pump to another, but values of D_o for pumps of the same make, model, and range should agree within ±3 percent of each other. Particulate influx from use will cause the pump slip to decrease as reflected by lower values for M. Calibrations should be performed at pump startup and after major maintenance to assure the stability of the pump slip rate. Analysis of mass injection data will also reflect pump slip stability.

(c) *CFV calibration.* (1) Calibration of the Critical Flow Venturi (CFV) is based upon the flow equation for a critical venturi. Gas flow is a function of inlet pressure and temperature:

$$Q_s = \frac{K_v P}{\sqrt{T}}$$

Where:

(i) Q_s = Flow.

(ii) K_v = Calibration coefficient.

(iii) P = Absolute pressure.

(iv) T = Absolute temperature.

The calibration procedure described below establishes the value of the calibration coefficient at the measured values of pressure, temperature and air flow.

(2) The manufacturer's recommended procedure shall be followed for calibrating electronic portions of the CFV.

(3) Measurements necessary for flow calibration are as follows:

CALIBRATION DATA MEASUREMENTS

Parameter	Symbol	Units	Tolerances
Barometric pressure (corrected)	P_B	kPa (in. Hg)	±0.03 kPa (±0.01 in. Hg)
Air temperature, flowmeter	ETI	°C (°F)	±0.15 °C (±0.27 °F)
Pressure depression upstream of LFE	EPI	kPa (in. H_2O)	±0.01kPa (±0.05 in. H_2O)
Pressure drop across LFE matrix	EDP	kPa (in. H_2O)	±0.001 kPa (±0.005 in. H_2O)
Air flow	Q_s	m^3/min (ft^3/min)	±0.5%
CFV inlet depression	PPI	kPa (in. fluid)	±0.02 kPa (±0.05 in. fluid)
Temperature at venturi inlet	T_v	°C (°F)	±0.25 °C (±0.45 °F)
Specific gravity of manometer fluid (1.75 oil)	Sp Gr	. . .	. . .

(4) Set up equipment as shown in Figure F78–6 and check for leaks. Any leaks between the flow measuring device and the critical flow venturi will seriously affect the accuracy of the calibration.

(5) Set the variable flow restrictor to the open position, start the blower and allow the system to stabilize. Record data from all instruments.

(6) Vary the flow restrictor and make at least 8 readings across the critical flow range of the venturi.

(7) *Data analysis.* The data recorded during the calibration are to be used in the following calculations:

(i) The air flow rate, Q_s, at each test point is calculated from the flowmeter data using the manufacturer's prescribed method.

(ii) Calculate values of the calibration coefficient for each test point:

$$K_v = \frac{Q_s \sqrt{T_v}}{P_v}$$

Where:

(A) Q_s = Flow rate in m^3/minute, standard conditions are 20 °C, 101.3 kPa (68 °F, 29.92 in. Hg)

(B) T_v = Temperature at venturi inlet, °K(°R).

(C)(*1*) P_v = Pressure at venturi inlet, kPa (mm Hg) = P_B–PPI.

(*2*) *For English units,* $P_v = P_B - PPI$ (SP.GR./13.57).

Where:

(D) PPI = Venturi inlet pressure depression, kPa (in. fluid).

(E) SP.GR.=Specific gravity of manometer fluid, relative to water.

(iii) Plot K_v as a function of venturi inlet depression. For sonic flow, K_v will have a relatively constant value. As pressure decreases (vacuum increases), the venturi becomes unchoked and K_v decreases (is no longer constant). See Figure F78–7.

(iv) For a minimum of 8 points in the critical region, calculate an average K_v and the standard deviation.

(v) If the standard deviation exceeds 0.3 percent of the average K_v, take corrective action.

(d) *CVS system verification.* The following ''gravimetric'' technique can be used to verify that the CVS and analytical instruments can accurately measure a mass of gas that has been injected into the system. If the CVS and analytical system will be used only in the testing of gasoline-fueled vehicles, the system verification may be performed using either propane or carbon monoxide. If the CVS and analytical system will be used with methanol-fueled vehicles as well as gasoline-fueled vehicles, system verification performance check must include a methanol check in addition to either the propane or carbon monoxide check. (Verification can also be accomplished by constant flow metering using critical flow orifice devices.)

(1) Obtain a small cylinder that has been charged with pure propane or carbon monoxide gas (CAUTION—carbon monoxide is poisonous).

(2) Determine a reference cylinder weight to the nearest 0.01 grams.

(3) Operate the CVS in the normal manner and release a quantity of pure propane or carbon monoxide into the system during the sampling period (approximately 5 minutes).

(4) Following completion of step (3) above (if methanol injection is required), continue to operate the CVS in the normal manner and release a known quantity of pure methanol (in gaseous form) into the system during the sampling period (approximately 5 minutes). This step does not need to be performed with each verification, provided that it is performed at least twice annually.

(5) The calculations of § 86.544 are performed in the normal way except in the case of propane. The density of propane (0.6109 kg/m^3/carbon atom (17.30 g/ft^3/carbon atom)) is used in place of the density of exhaust hydrocarbons. In the case of carbon monoxide, the density of 1.164 kg/m^3 (32.97 g/ft^3) is used. In the case of methanol, the density of 1.332 kg/m^3 (37.71 g/ft^3) is used.

(6) The gravimetric mass is subtracted from the CVS measured mass and then divided by the gravimetric mass to determine the percent accuracy of the system.

(7) The cause for any discrepancy greater than ±2 percent must be found and corrected. The Administrator, upon request, may waive the requirement to comply with ±2 percent methanol recovery tolerance, and instead require compliance with a higher tolerance (not to exceed ±6 percent), provided that:

(i) The Administrator determines that compliance with the specified tolerance is not practically feasible; and

(ii) The manufacturer makes information available to the Administrator which indicates that the calibration tests and their results are consistent

with good laboratory practice, and that the results are consistent with the results of calibration testing conducted by the Administrator.

[54 FR 14546, Apr. 11, 1989, as amended at 60 FR 34355, June 30, 1995]

§ 86.521–90 Hydrocarbon analyzer calibration.

(a) The FID hydrocarbon analyzer shall receive the following initial and periodic calibration. The HFID used with methanol-fueled vehicles shall be operated at 235 °F±15 °F (113 °C±8 °C).

(b) *Initial and periodic optimization of detector response.* Prior to its introduction into service and at least annually thereafter, the FID hydrocarbon analyzer shall be adjusted for optimum hydrocarbon response. Analyzers used with petroleum fuels and liquefied petroleum gas-fuel shall be optimized using propane. Analyzers used with natural gas-fuel for measurement of hydrocarbons shall be optimized using methane. If a single analyzer is used for all measurements, it shall be optimized using propane and its response factor for methane shall be determined and accounted for in measurements of total hydrocarbons from natural gas-fuel. Alternate methods yielding equivalent results may be used, if approved in advance by the Administrator.

(1) Follow the manufacturer's instructions or good engineering practice for instrument startup and basic operating adjustment using the appropriate FID fuel and zero-grade air.

(2) Optimize on the most common operating range. Introduce into the analyzer a propane (methane as appropriate) in air mixture (methanol in air mixture for methanol-fueled vehicles when optional methanol calibrated FID procedure is used during the 1990 through 1994 model year) with a propane (or methane or methanol as appropriate) concentration equal to approximately 90 percent of the most common operating range.

(3) Select an operating FID fuel flow rate that will give near maximum response and least variation in response with minor fuel flow variations.

(4) To determine the optimum air flow, use the FID fuel flow setting determined above and vary air flow.

(5) After the optimum flow rates have been determined, record them for future reference.

(c) *Initial and periodic calibration.* Prior to its introduction into service and monthly thereafter the FID hydrocarbon analyzer shall be calibrated on all normally used instrument ranges, and, if applicable, the methanol response factor shall be determined (paragraph (d) of this section). Use the same flow rate as when analyzing sample.

(1) Adjust analyzer to optimize performance.

(2) Zero the hydrocarbon analyzer with zero grade air.

(3) Calibrate on each normally used operating range with propane in air (or methanol or methane in air as appropriate) calibration gases having nominal concentrations of 15, 30, 45, 60, 75 and 90 percent of that range. For each range calibrated, if the deviation from a least squares best-fit straight line is two percent or less of the value at each data point, concentration values may be calculated by use of a single calibration factor for that range. If the deviation exceeds two percent at any point, the best-fit non-linear equation which represents the data to within two percent of each test point shall be used to determine concentration.

(d) *FID response factor to methanol.* When the FID analyzer is to be used for the analysis of hydrocarbon samples containing methanol, the methanol response factor of the analyzer shall be established. The methanol response factor shall be determined at several concentrations in the range of concentrations in the exhaust sample, using either bag samples or gas bottles meeting the requirements of § 86.514.

(1) The bag sample, if used, of methanol for analysis in the FID shall be prepared using the apparatus shown in Figure F90–4. A known volume of methanol is injected, using a microliter syringe, into the heated mixing zone (250 °F (121 °C)) of the apparatus. The methanol is vaporized and swept into the sample bag with a known volume of zero grade air measured by a gas flow meter meeting the performance requirements of § 86.120.

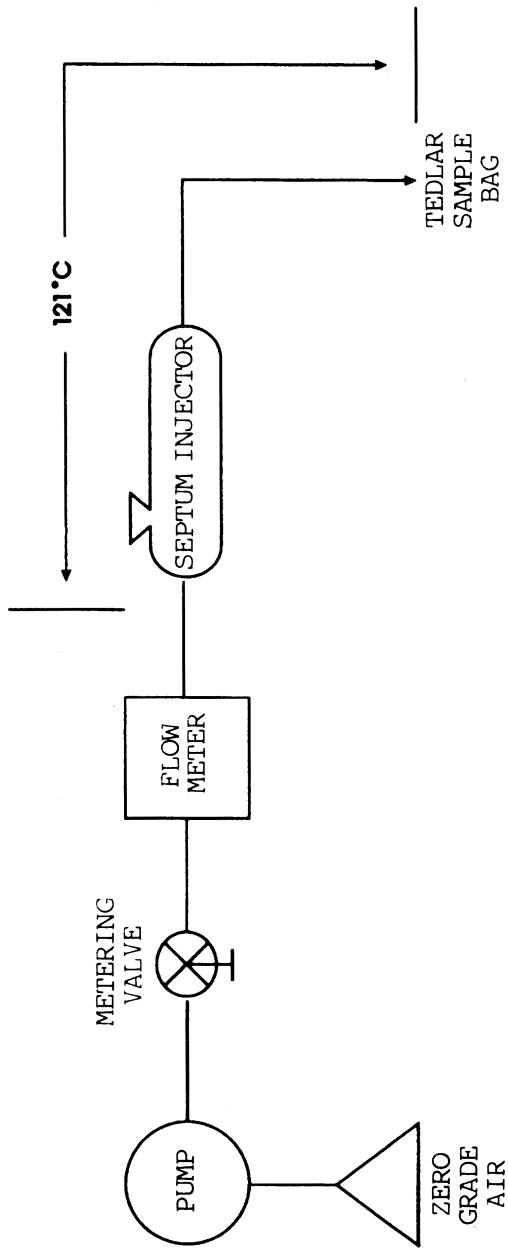

FIGURE F90-4 APPARATUS FOR PREPARATION OF FID METHANOL RESPONSE CALIBRATION MIX

(2) The bag sample is analyzed using the FID.

(3) The FID response factor, r, is calculated as follows:

$$r = FID_{ppm}/SAM_{ppm}$$

Where:

(i) r = FID response factor.

(ii) FID_{ppm} = FID reading, ppmC.

(iii) SAMppm=methanol concentration in the sample bag, or gas bottle, in ppmC. SAMppm for sample bags:

$$= \frac{0.02406 \times \text{Fuel injected} \times \text{Fuel density}}{\text{Air volume} \times \text{Mol. Wt. } CH_3OH}$$

Where:

(iv) 0.02406 = Volume of one mole at 101.3 kPa (29.92 in. Hg) and 20 °C (68 °F), m^3.

(v) Fuel injected = Volume of methanol injected, ml.

(vi) Fuel Density = Density of methanol, 0.7914 g/ml

(vii) Air volume = Volume of zero grade air, m^3

(viii) Mol. Wt. CH_3OH = 32.04

(e) *FID response factor to methane.* When the FID analyzer is to be used for the analysis of natural gas-fueled motorcycle hydrocarbon samples, the methane response factor of the analyzer shall be established. To determine the total hydrocarbon FID response to methane, known methane in air concentrations traceable to National Institute of Standards and Technology (NIST) shall be analyzed by the FID. Several methane concentrations shall be analyzed by the FID in the range of concentrations in the exhaust sample. The total hydrocarbon FID response to methane is calculated as follows:

r_{CH4} = FIDppm/SAMppm

Where:

(1) r_{CH4} = FID response factor to methane.

(2) FIDppm = FID reading in ppmC.

(3) SAMppm = the known methane concentration in ppmC.

[54 FR 14546, Apr. 11, 1989, as amended at 59 FR 48514, Sept. 21, 1994; 60 FR 34355, June 30, 1995]

§ 86.522–78 Carbon monoxide analyzer calibration.

(a) *Initial and periodic interference check.* Prior to its introduction into service and annually thereafter the NDIR carbon monoxide analyzer shall be checked for response to water vapor and CO_2.

(1) Follow the manufacturer's instructions for instrument startup and operation. Adjust the analyzer to optimize performance on the most sensitive range.

(2) Zero the carbon monoxide analyzer with either zero grade air or zero grade nitrogen.

(3) Bubble a mixture of 3 percent CO_2 in N_2 through water at room temperature and record analyzer response.

(4) An analyzer response of more than 1 percent of full scale for ranges above 300 ppm full scale or of more than 3 ppm on ranges below 300 ppm full scale will require corrective action. (Use of conditioning columns is one form of corrective action which may be taken.)

(b) *Initial and periodic calibration.* Prior to its introduction into service and monthly thereafter the NDIR carbon monoxide analyzer shall be calibrated.

(1) Adjust the analyzer to optimize performance.

(2) Zero the carbon monoxide analyzer with either zero grade air or zero grade nitrogen.

(3) Calibrate on each normally used operating range with carbon monoxide in N_2 calibration gases having nominal concentrations of 15, 30, 45, 60, 75, and 90 percent of that range. Additional calibration points may be generated. For each range calibrated, if the deviation from a least-squares best-fit straight line is 2 percent or less of the value at each data point, concentration values may be calculated by use of a single calibration factor for that range. If the deviation exceeds 2 percent at any point, the best-fit non-linear equation which represents the data to within 2 percent of each test point shall be used to determine concentration.

§ 86.523–78 Oxides of nitrogen analyzer calibration.

(a) Prior to introduction into service and at least monthly thereafter, if oxides of nitrogen are measured, the chemiluminescent oxides of nitrogen analyzer must be checked for NO_2 to NO converter efficiency. Figure F78–8 is a reference for paragraphs (a) (1) through (11) of this section.

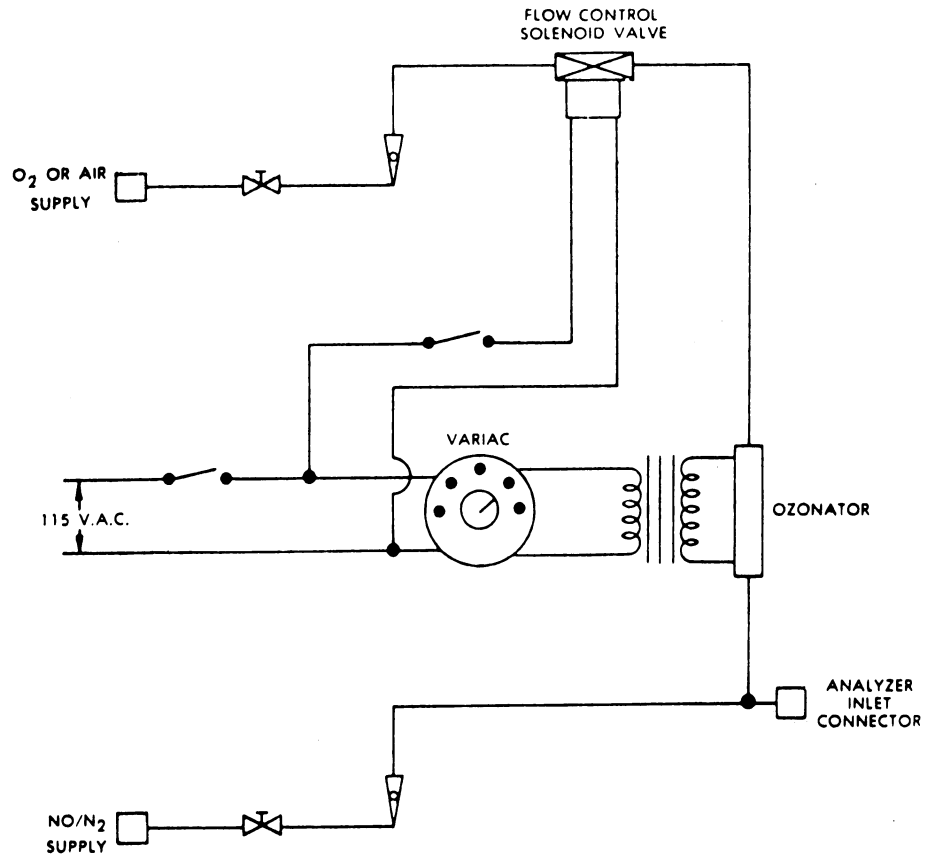

(SEE FIG F78–3 FOR SYMBOL LEGEND)
FIGURE F78–8—NOx CONVERTER EFFICIENCY DETECTOR

(1) Follow the manufacturer's instructions for instrument startup and operation. Adjust the analyzer to optimize performance.

(2) Zero the oxides of nitrogen analyzer with zero grade air or zero grade nitrogen.

(3) Connect the outlet of the NO_X generator to the sample inlet of the oxides of nitrogen analyzer which has been set to the most common operating range.

(4) Introduce into the NO_X generator analyzer-system a NO in nitrogen (N_2) mixture with a NO concentration equal to approximately 80 percent of the most common operating range. The NO_2 content of the gas mixture shall be less than 5 percent of the NO concentration.

(5) With the oxides of nitrogen analyzer in the NO mode, record the concentration of NO indicated by the analyzer.

(6) Turn on the NO_X generator O_2 (or air) supply and adjust the O_2 (or air) flow rate so that the NO indicated by the analyzer is about 10 percent less than indicated in step 5. Record the concentration of NO in this NO+O_2 mixture.

(7) Switch the NO_X generator to the generation mode and adjust the generation rate so that the NO measured on

the analyzer is 20 percent of that measured in step 5. There must be at least 10 percent unreacted NO at this point. Record the concentration of residual NO.

(8) Switch the oxides of nitrogen analyzer to the NO_X mode and measure total NO_X. Record this value.

(9) Switch off the NO_X generation but maintain gas flow through the system. The oxides of nitrogen analyzer will indicate the NO_X in the $NO+O_2$ mixture. Record this value.

(10) Turn off the NO_X generator O_2 (or air) supply. The analyzer will now indicate the NO_X in the original NO in N_2 mixture. This value should be no more than 5 percent above the value indicated in step 4.

(11) Calculate the efficiency of the NO_X converter by substituting the concentrations obtained into the following equation:

$$\text{Percent Efficiency} = [1 + (a - b)/(c - d)] \times 100$$

where:

a = concentration obtained in step (8).
b = concentration obtained in step (9).
c = concentration obtained in step (6).
d = concentration obtained in step (7).

If converter efficiency is not greater than 90 percent corrective action will be required.

(b) *Initial and periodic calibration.* Prior to its introduction into service and monthly thereafter, if oxides of nitrogen are measured, the chemiluminescent oxides of nitrogen analyzer shall be calibrated on all normally used instrument ranges. Use the same flow rate as when analyzing samples. Proceed as follows:

(1) Adjust analyzer to optimize performance.

(2) Zero the oxides of nitrogen analyzer with zero grade air or zero grade nitrogen.

(3) Calibrate on each normally used operating range with NO in N_2 calibration gases with nominal concentrations of 50 and 100 percent of that range. Additional calibration points may be generated.

(c) When testing methanol-fueled motorcycles, it may be necessary to clean the analyzer frequently to prevent interference with NO_X measurements (see EPA/600/S3–88/040).

[42 FR 1137, Jan. 5, 1977, as amended at 52 FR 47870, Dec. 16, 1987; 58 FR 58423, Nov. 1, 1993; 60 FR 34357, June 30, 1995]

§ 86.524–78 Carbon dioxide analyzer calibration.

(a) Prior to its introduction into service and monthly thereafter the NDIR carbon dioxide analyzer shall be calibrated:

(1) Follow the manufacturer's instructions for instrument startup and operation. Adjust the analyzer to optimize performance.

(2) Zero the carbon dioxide analyzer with either zero grade air or zero grade nitrogen.

(3) Calibrate on each normally used operating range with carbon dioxide in N_2 calibration gases with nominal concentrations of 15, 30, 45, 60, 75, and 90 percent of that range. Additional calibration points may be generated. For each range calibrated, if the deviation from a least-squares best-fit straight line is 2 percent or less of the value at each data point, concentration values may be calculated by use of a single calibration factor for that range. If the deviation exceeds 2 percent at any point, the best-fit non-linear equation which represents the data to within 2 percent of each test point shall be used to determine concentration.

(b) [Reserved]

§ 86.526–90 Calibration of other equipment.

Other test equipment used for testing shall be calibrated as often as required by the manufacturer or as necessary according to good practice. Specific equipment requiring calibration is the gas chromatograph and flame ionization detector used in measuring methanol and the high pressure liquid chromatograph (HPLC) and ultraviolet detector for measuring formaldehyde.

[54 FR 14551, Apr. 11, 1989]

§ 86.527–90 Test procedures, overview.

(a) The procedures described in this and subsequent sections are used to determine the conformity of motorcycles with the standards set forth in subpart E of this part.

(b) The overall test consists of prescribed sequences of fueling, parking, and operating conditions.

(c) The exhaust emission test is designed to determine hydrocarbon (gasoline-fueled, natural gas-fueled and liquefied petroleum gas-fueled motorcycles), methanol, formaldehyde, and hydrocarbon (methanol-fueled motorcycles), carbon monoxide and oxides of nitrogen mass emissions while simulating an average trip in an urban area. The test consists of engine startups and motorcycle operation on a chassis dynamometer, through a specified driving schedule. A proportional part of the diluted exhaust emissions is collected continuously for subsequent analysis, using a constant volume (variable dilution) sampler.

(d) Except in cases of component malfunction or failure, all emission control systems installed on or incorporated in a new motorcycle shall be functioning during all procedures in this subpart. Maintenance to correct component malfunction or failure shall be authorized in accordance with subpart E of this part.

(e) Background concentrations are measured for all species for which emissions measurements are made. For exhaust testing, this requires sampling and analysis of the dilution air. (When testing methanol-fueled motorcycles, manufacturers may choose not to measure background concentrations of methanol and/or formaldehyde, and then assume that the concentrations are zero during calculations.)

[54 FR 14551, Apr. 11, 1989, as amended at 59 FR 48515, Sept. 21, 1994; 60 FR 34357, June 30, 1995]

§ 86.528–78 Transmissions.

(a) Vehicles equipped with transfer cases, multiple sprockets, etc., shall be tested in the manufacturer's recommended configuration for street or highway use. If more than one configuration is recommended or if the recommendation is deemed unreasonable by the Administrator, the Administrator will specify the test configuration.

(b) All tests shall be conducted with automatic transmissions in ''Drive'' (highest gear). Automatic clutch-torque converter transmissions may be shifted as manual transmissions at the option of the manufacturer.

(c) Idle modes shall be run with automatic transmissions in ''Drive'' and the wheels braked, manual transmission shall be in gear with the clutch disengaged; except first idle, see §§ 86.536 and 86.537.

(d) The vehicle shall be driven with minimum throttle movement to maintain the desired speed. No simultaneous use of brake and throttle shall be permitted.

(e) Acceleration modes shall be driven smoothly. Automatic transmissions shall shift automatically through the normal sequence of gears; manual transmissions shall be shifted as recommended by the manufacturer to the ultimate purchaser (unless determined to be unreasonable by the Administrator) with the operator closing the throttle during each shift and accomplishing the shift with minimum time. If the vehicle cannot accelerate at the specified rate, the vehicle shall be operated with the throttle fully opened until the vehicle speed reaches the value prescribed for that time in the driving schedule.

(f) The deceleration modes shall be run in gear using brakes or throttle as necessary to maintain the desired speed. Manual transmission vehicles shall be downshifted using the same shift points as when upshifting or as recommended by the manufacturer in the vehicle owner's manual. All downshifts shall be made smoothly, disengaging the clutch while shifting and engaging the clutch once the lower gear has been selected. For those modes which require the vehicle to decelerate to zero, manual transmission clutches shall be disengaged when the speed drops below 15 km/h (9.3 mph) for vehicles with engine displacements equal to or greater than 280 cc (17.1 cu. in.), when the speed drops below 10 km/h (6.2 mph) for vehicles with engine displacements less than 280 cc (17.1 cu. in.), when engine roughness is evident, or when engine stalling is imminent.

(g) If downshifting during deceleration is not permitted in the vehicle owner's manual, manual transmissions will be downshifted at the beginning of or during a power mode if recommended by the manufacturer or if

the engine obviously is lugging. For those modes which require these vehicles to decelerate to zero, manual transmission clutches shall be disengaged when the speed drops below 25 km/h (15.5 mph) for vehicles with engine displacement equal to or greater than 280 cc (17.1 cu. in.), when the speed drops below 20 km/h (12.4 mph) for vehicles with engine displacements less than 280 cc (17.1 cu. in.), when engine roughness is evident, or when engine stalling is imminent. While the clutch is disengaged and during these deceleration modes, the vehicle shall be shifted to the appropriate gear for starting the next mode.

(h) If shift speeds are not recommended by the manufacturer, manual transmission vehicles shall be shifted as follows:

(1) For Class I and II motorcycles:

Shift	Speed
1st to 2d gear	19 km/h (11.8 mi/h).
2d to 3d gear	33 km/h (20.5 mi/h).
3d to 4th gear	44 km/h (27.3 mi/h).
4th to 5th gear	53 km/h (32.9 mi/h).

(2) For Class III motorcycles:

Shift	Speed
1st to 2d gear	30 km/h (18.6 mi/h).
2d to 3d gear	45 km/h (28.0 mi/h).
3d to 4th gear	60 km/h (37.3 mi/h).
4th to 5th gear	75 km/h (46.6 mi/h).

(3) Higher gears may be used at the manufacturer's option.

§ 86.529–78 Road load force and inertia weight determination.

(a) Road load as a function of speed is given by the following equation:

$$F = A + CV^2$$

The values for coefficients A and C and the test inertia are given in Figure F78–9. Velocity (V) is in km/h and force (F) is in newtons. The forces given by this equation shall be simulated to the best ability of the equipment being used.

(b) The inertia given in Figure F78–9 shall be used. Motorcycles with loaded vehicle mass outside these limits shall be tested at an equivalent inertial mass and road load force specified by the Administrator.

FIGURE F78–9

Loaded vehicle mass (kg)	Equivalent inertial mass (kg)	Force coefficients		Force at 65 km/h (nt)	70 to 60 km/h coastdown calibration times		
		A (nt)	C (nt/(km/h)^2)		Target time (sec)	Allowable tolerance	
						Longest time (sec)	Shortest time (sec)
95–105	100	0.0	0.224	94.8	2.95	3.1	2.8
106–115	110	0.82	.0227	96.8	3.18	3.3	3.0
116–125	120	1.70	.0230	98.8	3.39	3.6	3.2
126–135	130	2.57	.0233	100.9	3.60	3.8	3.4
136–145	140	3.44	.0235	102.9	3.80	4.0	3.6
146–155	150	4.32	0.230	104.9	3.99	4.2	3.8
156–165	160	5.19	.0241	107.0	4.10	4.4	4.0
166–175	170	6.06	.0244	109.0	4.36	4.6	4.2
176–185	180	6.94	.0246	111.0	4.53	4.7	4.3
186–195	190	7.81	.0249	113.1	4.69	4.9	4.5
196–205	200	8.69	.0252	115.1	4.85	5.1	4.6
206–215	210	9.56	.0255	117.1	5.00	5.2	4.8
216–225	220	10.43	.0257	119.2	5.15	5.4	4.9
226–235	230	11.31	.0260	121.2	5.30	5.5	5.1
236–245	240	12.18	.0263	123.2	5.43	5.7	5.2
246–255	250	13.06	.0266	125.3	5.57	5.8	5.4
256–265	260	13.93	.0268	127.3	5.70	5.9	5.5
266–275	270	14.80	.0271	129.3	5.82	6.1	5.6
276–285	280	15.68	.0274	131.4	5.95	6.2	5.7
286–295	290	16.55	.0277	133.4	6.06	6.3	5.8
296–305	300	17.43	.0279	135.4	6.18	6.4	6.0
306–315	310	18.39	.0282	137.5	6.29	6.5	6.1
316–325	320	19.17	.0285	139.5	6.40	6.6	6.2
326–335	330	30.05	.0288	141.6	6.50	6.7	6.3
336–345	340	20.92	.0290	143.6	6.60	6.8	6.4
346–355	350	21.80	.0293	145.6	6.70	6.9	6.5
356–365	360	22.67	.0296	147.7	6.80	7.0	6.6
366–375	370	23.54	.0299	149.7	6.89	7.1	6.7
376–385	380	24.42	.0301	151.7	6.98	7.2	6.8

FIGURE F78–9—Continued

Loaded vehicle mass (kg)	Equivalent inertial mass (kg)	Force coefficients		Force at 65 km/h (nt)	70 to 60 km/h coastdown calibration times		
		A (nt)	C (nt/(km/h)^2)		Target time (sec)	Allowable tolerance	
						Longest time (sec)	Shortest time (sec)
386–395	390	25.29	.0304	153.8	7.07	7.3	6.9
396–405	400	26.17	.0307	155.8	7.16	7.4	6.9
406–415	410	27.04	.0310	157.8	7.24	7.5	7.0
416–425	420	27.91	.0312	159.9	7.33	7.6	7.1
426–435	430	28.79	.0315	161.9	7.41	7.6	7.2
436–445	440	29.66	.0317	163.7	7.49	7.7	7.3
446–455	450	30.54	.0318	164.9	7.61	7.8	7.4
456–465	460	31.41	.0319	166.0	7.73	8.0	7.5
466–475	470	32.28	.0319	167.1	7.84	8.1	7.6
476–485	480	33.16	.0320	168.3	7.95	8.2	7.7
486–495	490	43.03	.0320	169.4	8.06	8.3	7.8
496–505	500	34.90	.0321	170.5	8.17	8.4	7.9
506–515	510	35.78	.0322	171.7	8.28	8.5	8.0
516–525	520	36.65	.0322	172.8	8.39	8.6	8.2
526–535	530	37.53	.0323	173.9	8.49	8.7	8.3
536–545	540	38.40	.0323	175.1	8.60	8.8	8.4
546–555	550	39.27	.0324	176.2	8.70	9.0	8.5
556–565	560	40.15	.0325	177.3	8.80	9.1	8.6
566–575	570	41.02	.0325	178.5	8.90	9.2	8.7
576–585	580	41.90	.0326	179.6	9.00	9.3	8.8
586–595	590	42.77	.0327	180.8	9.10	9.4	8.9
596–605	600	43.64	.0327	181.9	9.19	9.5	8.9
606–615	610	44.52	.0328	183.0	9.29	9.5	9.0
616–625	620	45.39	.0328	184.2	9.38	9.6	9.1
626–635	630	46.27	.0329	185.3	9.47	9.7	9.2
636–645	640	47.14	.0330	186.4	9.56	9.8	9.3
646–655	650	48.01	.0330	187.6	9.65	9.9	9.4
656–665	660	48.89	.0331	188.7	9.74	10.0	9.5
666–675	670	49.76	.0332	189.8	9.83	10.1	9.6
676–685	680	50.64	.0332	191.0	9.92	10.2	9.7
686–695	690	51.91	.0333	192.1	10.01	10.3	9.8
696–705	700	52.38	.0333	193.2	10.09	10.4	9.8
706–715	710	53.26	.0334	194.4	10.17	10.4	9.9
716–725	720	54.13	.0335	195.5	10.26	10.5	10.0
726–735	730	55.01	.0335	196.6	10.34	10.6	10.1
736–745	740	55.88	.0336	197.8	10.42	10.7	10.2
746–755	750	56.75	.0336	198.9	10.50	10.8	10.2
756–760	760	57.63	.0337	200.1	10.58	10.9	10.3

(c) The dynamometer shall be adjusted to reproduce the specified road load as determined by the most recent calibration. Alternatively, the actual vehicle road load can be measured and duplicated:

(1) Make at least 5 replicate coastdowns in each direction from 70 to 60 km/h on a smooth, level, track under balanced wind conditions. The driver must have a mass of 80±10 kg and be in the normal driving position. Record the coastdown time.

(2) Average the coastdown times. Adjust the dynamometer load so that the coastdown time is duplicated with the vehicle and driver on the dynamometer.

(3) Alternate procedures may be used if approved in advance by the Administrator.

§ 86.529–98 Road load force and inertia weight determination.

(a)(1) Road load as a function of speed is given by the following equation:

$$F = A + CV^2$$

(2) The values for coefficients A and C and the test inertia are given in Figure F98–9 of this section. Velocity V is in km/h and force (F) is in newtons. The forces given by the equation in paragraph (a)(1) of this section shall be simulated to the best ability of the equipment being used.

(b) The inertia given in Figure F98–9 shall be used. Motorcycles with loaded

vehicle mass outside these limits shall be tested at an equivalent inertial mass and road load force specified by the Administrator. Figure F98–9 follows:

FIGURE F98–9

Loaded vehicle mass (kg)	Equivalent inertial mass (kg)	Force coefficients		Force at 65 km/h (nt)	70 to 60 km/h coastdown calibration times		
		A (nt)	C (nt/(km/h)^2)		Target time (sec)	Allowable tolerance	
						Longest time (sec)	Shortest time (sec)
95–105	100	0.0	.0224	94.8	2.95	3.1	2.8
106–115	110	0.82	.0227	96.8	3.18	3.3	3.0
116–125	120	1.70	.0230	98.8	3.39	3.6	3.2
126–135	130	2.57	.0233	100.9	3.60	3.8	3.4
136–145	140	3.44	.0235	102.9	3.80	4.0	3.6
146–155	150	4.32	.0238	104.9	3.99	4.2	3.8
156–165	160	5.19	.0241	107.0	4.10	4.4	4.0
166–175	170	6.06	.0244	109.0	4.36	4.6	4.2
176–185	180	6.94	.0246	111.0	4.53	4.7	4.3
186–195	190	7.81	.0249	113.1	4.69	4.9	4.5
196–205	200	8.69	.0252	115.1	4.85	5.1	4.6
206–215	210	9.56	.0255	117.1	5.00	5.2	4.8
216–225	220	10.43	.0257	119.2	5.15	5.4	4.9
226–235	230	11.31	.0260	121.2	5.30	5.5	5.1
236–245	240	12.18	.0263	123.2	5.43	5.7	5.2
246–255	250	13.06	.0266	125.3	5.57	5.8	5.4
256–265	260	13.93	.0268	127.3	5.70	5.9	5.5
266–275	270	14.80	.0271	129.3	5.82	6.1	5.6
276–285	280	15.68	.0274	131.4	5.95	6.2	5.7
286–295	290	16.55	.0277	133.4	6.06	6.3	5.8
296–305	300	17.43	.0279	135.4	6.18	6.4	6.0
306–315	310	18.30	.0282	137.5	6.29	6.5	6.1
316–325	320	19.17	.0285	139.5	6.40	6.6	6.2
326–335	330	20.05	.0288	141.6	6.50	6.7	6.3
336–345	340	20.92	.0290	143.6	6.60	6.8	6.4
346–355	350	21.80	.0293	145.6	6.70	6.9	6.5
356–365	360	22.67	.0296	147.7	6.80	7.0	6.6
366–375	370	23.54	.0299	149.7	6.89	7.1	6.7
376–385	380	24.42	.0301	151.7	6.98	7.2	6.8
386–395	390	25.29	.0304	153.8	7.07	7.3	6.9
396–405	400	26.17	.0307	155.8	7.16	7.4	6.9
406–415	410	27.04	.0310	157.8	7.24	7.5	7.0
416–425	420	27.91	.0312	159.9	7.33	7.6	7.1
426–435	430	28.79	.0315	161.9	7.41	7.6	7.2
436–445	440	29.66	.0317	163.7	7.49	7.7	7.3
446–455	450	30.54	.0318	164.9	7.61	7.8	7.4
456–465	460	31.41	.0319	166.0	7.73	8.0	7.5
466–475	470	32.28	.0319	167.1	7.84	8.1	7.6
476–485	480	33.16	.0320	168.3	7.95	8.2	7.7
486–495	490	34.03	.0320	169.4	8.06	8.3	7.8
496–505	500	34.90	.0321	170.5	8.17	8.4	7.9
506–515	510	35.78	.0322	171.7	8.28	8.5	8.0
516–525	520	36.65	.0322	172.8	8.39	8.6	8.2
526–535	530	37.53	.0323	173.9	8.49	8.7	8.3
536–545	540	38.40	.0323	175.1	8.60	8.8	8.4
546–555	550	39.27	.0324	176.2	8.70	9.0	8.5
556–565	560	40.15	.0325	177.3	8.80	9.1	8.6
566–575	570	41.02	.0325	178.5	8.90	9.2	8.7
576–585	580	41.90	.0326	179.6	9.00	9.3	8.8
586–595	590	42.77	.0327	180.8	9.10	9.4	8.9
596–605	600	43.64	.0327	181.9	9.19	9.5	8.9
606–615	610	44.52	.0328	183.0	9.29	9.5	9.0
616–625	620	45.39	.0328	184.2	9.38	9.6	9.1
626–635	630	46.27	.0329	185.3	9.47	9.7	9.2
636–645	640	47.14	.0330	186.4	9.56	9.8	9.3
646–655	650	48.01	.0330	187.6	9.65	9.9	9.4
565–665	660	48.89	.0331	188.7	9.74	10.0	9.5
666–675	670	49.76	.0332	189.8	9.83	10.1	9.6
676–685	680	50.64	.0332	191.0	9.92	10.2	9.7
686–695	690	51.51	.0333	192.1	10.01	10.3	9.8
696–705	700	52.38	.0333	193.2	10.09	10.4	9.8
706–715	710	53.26	.0334	194.4	10.17	10.4	9.9

FIGURE F98–9—Continued

Loaded vehicle mass (kg)	Equivalent inertial mass (kg)	Force coefficients		Force at 65 km/h (nt)	70 to 60 km/h coastdown calibration times		
		A (nt)	C (nt/(km/h)^2)		Target time (sec)	Allowable tolerance	
						Longest time (sec)	Shortest time (sec)
716–725	720	54.13	.0335	195.5	10.26	10.5	10.0
726–735	730	55.01	.0335	196.6	10.34	10.6	10.1
736–745	740	55.88	.0336	197.8	10.42	10.7	10.2
746–755	750	56.75	.0336	198.9	10.50	10.8	10.2
756–765	760	57.63	.0337	200.1	10.58	10.9	10.3
766–775	770	58.50	.0338	201.2	10.66	10.9	10.3
776–785	780	59.38	.0338	203.3	10.74	11.0	10.4
786–795	790	60.25	.0339	204.5	10.82	11.1	10.5
796–805	800	61.12	.0339	205.6	10.91	11.2	10.6
806–815	810	62.00	.0340	206.7	10.99	11.3	10.7
816–825	820	62.87	.0341	207.9	11.07	11.4	10.8
826–835	830	63.75	.0341	209.0	11.15	11.5	10.8
836–845	840	64.62	.0342	210.1	11.24	11.5	10.9
846–855	850	65.49	.0343	211.3	11.32	11.6	11.0
856–865	860	66.37	.0343	212.4	11.40	11.7	11.1
866–873	870	67.24	.0344	213.5	11.48	11.8	11.2

(c) The dynamometer shall be adjusted to reproduce the specified road load as determined by the most recent calibration. Alternatively, the actual vehicle road load can be measured and duplicated:

(1) Make at least 5 replicate coastdowns in each direction from 70 to 60 km/h on a smooth, level track under balanced wind conditions. The driver must have a mass of 80 ±10 kg and be in the normal driving position. Record the coastdown time.

(2) Average the coastdown times. Adjust the dynamometer load so that the coastdown time is duplicated with the vehicle and driver on the dynamometer.

(3) Alternate procedures may be used if approved in advance by the Administrator.

[63 FR 11849, Mar. 11, 1998]

§ 86.530–78 Test sequence, general requirements.

(a) Ambient temperature levels encountered by the test vehicle throughout the test sequence shall not be less than 20 °C (68 °F) nor more than 30 °C (86 °F). The vehicle shall be approximately level during the emission test to prevent abnormal fuel distribution.

(b) [Reserved]

§ 86.531–78 Vehicle preparation.

(a) The manufacturer shall provide additional fittings and adapters, as required by the Administrator * * *, such as * * * to accommodate a fuel drain at the lowest point possible in the tank(s) as installed on the vehicle and to provide for exhaust sample collection.

(b) [Reserved]

§ 86.532–78 Vehicle preconditioning.

(a) The vehicle shall be moved to the test area and the following operations performed:

(1) The fuel tank(s) shall be drained through the provided fuel tank(s) drain(s) and charged with the specified test fuel, § 86.513, to half the tank(s) capacity.

(2) The vehicle shall be placed, either by being driven or pushed, on a dynamometer and operated through one Urban Dynamometer Driving Schedule test procedure (see § 86.515 and appendix I). The vehicle need not be cold, and may be used to set dynamometer horsepower.

(b) Within five (5) minutes of completion of preconditioning, the vehicle shall be removed from the dynamometer and may be driven or pushed to the soak area to be parked. The vehicle shall be stored for not less than the following times prior to the cold start exhaust test.

	Hours
Class I	6
Class II	8
Class III	12

In no case shall the vehicle be stored for more than 36 hours prior to the cold start exhaust test.

§ 86.535–90 Dynamometer procedure.

(a) The dynamometer run consists of two tests, a ''cold'' start test and a ''hot'' start test following the ''cold'' start by 10 minutes. Engine startup (with all accessories turned off), operation over the driving schedule, and engine shutdown make a complete cold start test. Engine startup and operation over the first 505 seconds of the driving schedule complete the hot start test. The exhaust emissions are diluted with ambient air and a continuously proportional sample is collected for analysis during each phase. The composite samples collected in bags are analyzed for hydrocarbons, carbon monoxide, carbon dioxide, and, optionally, for oxides of nitrogen. A parallel sample of the dilution air is similarly analyzed for hydrocarbon, carbon monoxide, carbon dioxide, and, optionally, for oxides of nitrogen. Methanol and formaldehyde samples (exhaust and dilution air) are collected and analyzed for methanol-fueled vehicles (a single dilution air formaldehyde sample covering the total time of the test may be collected in place of individual test phases).

(b) [Reserved]

(c) The vehicle speed, as measured from the dynamometer roll, shall be used. A speed *vs.* time recording, as evidence of dynamometer test validity, shall be supplied on request of the Administrator.

(d) Practice runs over the prescribed driving schedule may be performed at test points, provided an emission sample is not taken, for the purpose of finding the minimum throttle action to maintain the proper speed-time relationship, or to permit sampling system adjustments.

(e) The drive wheel tires must be inflated to the manufacturer's recommended pressure, ±15 kPa (±2.2 psi). The drive wheel tire pressure shall be reported with the test results.

(f) If the dynamometer has not been operated during the two-hour period immediately preceding the test, it shall be warmed up for 15 minutes by operating at 50 km/h (31 mph) using a nontest vehicle, or as recommended by the dynamometer manufacturer.

(g) If the dynamometer horsepower must be adjusted manually, it shall be set within one hour prior to the exhaust emissions test phase. The test vehicle shall not be used to make this adjustment. Dynamometers using automatic control of preselectable power settings may be set anytime prior to the beginning of the emissions test.

(h) The driving distance, as measured by counting the number of dynamometer roll revolutions, shall be determined for the transient cold start, stabilized cold start, and transient hot start phases of the test.

[54 FR 14551, Apr. 11, 1989]

§ 86.536–78 Engine starting and restarting.

(a)(1) The engine shall be started according to the manufacturer's recommended starting procedures. The initial 20 second idle period shall begin when the engine starts.

(2) *Choke operation.* (i) Vehicles equipped with automatic chokes shall be operated according to the instructions in the manufacturer's operating instructions or owner's manual including choke setting and ''kick-down'' from cold fast idle. The transmission shall be placed in gear 15 seconds after the engine is started. If necessary, braking may be employed to keep the drive wheels from turning.

(ii) Vehicles equipped with manual chokes shall be operated according to the manufacturer's operating instructions or owner's manual. Where times are provided in the instructions, the Administrator may specify the specific point for operation, within 15 seconds of the recommended time.

(3) The operator may use the choke, throttle etc. where necessary to keep the engine running.

(4) If the manufacturer's operating instructions or owner's manual do not specify a warm engine starting procedure, the engine (automatic and manual choke engines) shall be started by

opening the throttle about half way and cranking the engine until it starts.

(b) [Reserved]

(c) If, during the cold start, the vehicle does not start after 10 seconds of cranking, or ten cycles of the manual starting mechanism, cranking shall cease and the reason for failure to start determined. The revolution counter on the constant volume sampler shall be turned off and the sample solenoid valves placed in the ''standby'' position during this diagnostic period. In addition, either the CVS blower shall be turned off or the exhaust tube disconnected from the tailpipe during the diagnostic period.

(1) If failure to start is an operational error, the vehicle shall be rescheduled for testing from a cold start. If failure to start is caused by vehicle malfunction, corrective action (following the unscheduled maintenance provisions) of less than 30 minutes duration may be taken and the test continued. The sampling system shall be reactivated at the same time cranking is started. When the engine starts, the driving schedule timing sequence shall begin. If failure to start is caused by vehicle malfunction and the vehicle cannot be started, the test shall be voided, the vehicle removed from the dynamometer, corrective action taken (following the unscheduled maintenance provisions), and the vehicle rescheduled for test. The reason for the malfunction (if determined) and the corrective action taken shall be reported.

(2) If the vehicle does not start during the hot start after ten seconds of cranking, or ten cycles of the manual starting mechanism, cranking shall cease, the test shall be voided, the vehicle removed from the dynamometer, corrective action taken in accordance with § 86.428 or § 86.429, and the vehicle rescheduled for test. The reason for the malfunction (if determined) and the corrective action taken shall be reported.

(d) If the engine ''false starts'', the operator shall repeat the recommended starting procedure (such as resetting the choke, etc.)

(e) *Stalling*. (1) If the engine stalls during an idle period, the engine shall be restarted immediately and the test continued. If the engine cannot be started soon enough to allow the vehicle to follow the next acceleration as prescribed, the driving schedule indicator shall be stopped. When the vehicle restarts, the driving schedule indicator shall be reactivated.

(2) If the engine stalls during some operating mode other than idle, the driving schedule indicator shall be stopped, the vehicle shall then be restarted and accelerated to the speed required at that point in the driving schedule and the test continued. During acceleration to this point, shifting shall be performed in accordance with § 86.528.

(3) If the vehicle will not restart within one minute, the test shall be voided, the vehicle removed from the dynamometer, corrective action taken, and the vehicle rescheduled for test. The reason for the malfunction (if determined) and the corrective action taken shall be reported.

§ 86.537–90 Dynamometer test runs.

(a) The vehicle shall be allowed to stand with the engine turned off (see § 86.532 for required time). The vehicle shall be stored prior to the emission test in such a manner that precipitation (*e.g.*, rain or dew) does not occur on the vehicle. The complete dynamometer test consists of a cold start drive of 12.0 km (7.5 mi), (10.9 km (6.8 mi) for Class I motorcycles) and simulates a hot start drive of 12.0 km (7.5 mi), (10.9 km (6.8 mi) for Class I motorcycles). The vehicle is allowed to stand on the dynamometer during the 10-minute period between the cold and hot start tests. The cold start is divided into two periods. The first period, representing the cold start ''transient'' phase, terminates at the end of the deceleration which is scheduled to occur at 505 seconds of the driving schedule. The second period, representing the ''stabilized'' phase, consists of the remainder of the driving schedule including engine shutdown. The hot start test similarly consists of two periods. The period, representing the hot start ''transient'' phase, terminates at the same point in the driving schedule at the first point of the cold start test. The second period of the hot start test, ''stabilized'' phase, is assumed to be identical to the second period of the

cold start test. Therefore, the hot start test terminates after the first period (505 seconds) is run.

(b) The following steps shall be taken for each test:

(1) Place drive wheel of vehicle on dynamometer without starting engine.

(2) Activate vehicle cooling fan.

(3) For all vehicles, with the sample selector valves in the ''standby'' position connect evacuated sample collection bags to the dilute exhaust and dilution air sample collection systems.

(4) For methanol-fueled vehicles, with the sample selector valves in the ''standby'' position, insert fresh sample collection impingers into the methanol sample collection system, fresh impingers or a fresh cartridge into the formaldehyde sample collection system and fresh impingers (or a single cartridge for formaldehyde) into the dilution air sample collection systems for methanol and formaldehyde (background measurements of methanol and formaldehyde may be omitted and concentrations assumed to be zero for calculations in § 86.544).

(5) Start the CVS (if not already on), the sample pumps and the temperature recorder. (The heat exchanger of the constant volume sampler, if used, methanol-fueled vehicle hydrocarbon analyzer and sample lines should be preheated to their respective operating temperatures before the test begins.)

(6) Adjust the sample flow rates to the desired flow rate and set the gas flow measuring devices to zero.

(i) For gaseous bag samples (except hydrocarbon samples), the minimum flow rate is 0.17 cfm (0.08 l/s).

(ii) For hydrocarbon samples, the minimum FID (or HFID in the case of methanol-fueled vehicles) flow rate is 0.066 cfm (0.031 l/s).

(iii) For methanol samples, the flow rates shall be set such that the system meets the design criteria of § 86.509. For samples in which the concentration in the primary impinger exceeds 0.5 mg/l, it is recommended that the mass of methanol collected in the secondary impinger not exceed ten percent of the total mass collected. For samples in which the concentration in the primary impinger does not exceed 0.5 mg/l, secondary impingers do not need to be analyzed.

(iv) For formaldehyde samples, the flow rates shall be set such that the system meets the design criteria of § 86.509. For impinger samples in which the concentration of formaldehyde in the primary impinger exceeds 0.1 mg/l, it is recommended that the mass of formaldehyde collected in the secondary impinger not exceed ten percent of the total mass collected. For samples in which the concentration in the primary impinger does not exceed 0.1 mg/l, secondary impingers do not need to be analyzed.

(7) Attach the flexible exhaust tube to the vehicle tailpipe(s).

(8) Start the gas flow measuring device, position the sample selector valves to direct the sample flow into the ''transient'' exhaust sample bag, the ''transient'' methanol exhaust sample, the ''transient'' formaldehyde exhaust sample, the ''transient'' dilution air sample bag, the ''transient'' methanol dilution air sample and the ''transient'' formaldehyde dilution air sample, turn the key on, and start cranking the engine.

(9) Fifteen seconds after the engine starts, place the transmission in gear.

(10) Twenty seconds after the engine starts, begin the initial vehicle acceleration of the driving schedule.

(11) Operate the vehicle according to the Urban Dynamometer Driving Schedule (§ 86.515).

(12) At the end of the deceleration which is scheduled to occur at 505 seconds, simultaneously switch the sample flows from the ''transient'' bags and samples to ''stabilized'' bags and samples, switch off gas flow measuring device No. 1 and, start gas flow measuring device No. 2. Before the acceleration which is scheduled to occur at 510 seconds, record the measured roll or shaft revolutions and reset the counter or switch to a second counter. As soon as possible, transfer the ''stabilized'' exhaust and dilution air samples to the analytical system and process the samples according to § 86.540, obtaining a stabilized reading of the exhaust bag sample on all analyzers within 20 minutes of the end of the sample collection phase of the test. Obtain methanol and formaldehyde sample analyses, if applicable, within 24 hours of the end of the sample period. (If it is not possible to

perform analysis on the methanol and formaldehyde samples within 24 hours, the samples should be stored in a dark cold (4–10 °C) environment until analysis. The samples should be analyzed within fourteen days.)

(13) Turn the engine off 2 seconds after the end of the last deceleration (at 1,369 seconds).

(14) Five seconds after the engine stops running, simultaneously turn off gas flow measuring device No. 2 and position the sample selector valves to the ''standby'' position (and open the valves isolating particulate filter No. 1, if applicable). Record the measured roll or shaft revolutions (both gas meter or flow measurement instrumentation readings) and re-set the counter. As soon as possible, transfer the ''stabilized'' exhaust and dilution air samples to the analytical system and process the samples according to § 86.540, obtaining a stabilized reading of the exhaust bag sample on all analyzers within 20 minutes of the end of the sample collection phase of the test. Obtain methanol and formaldehyde sample analyses, if applicable, within 24 hours of the end of the sample period. (If it is not possible to perform analysis on the methanol and formaldehyde samples within 24 hours, the samples should be stored in a dark cold (4–10 °C) environment until analysis. The samples should be analyzed within fourteen days.)

(15) Immediately after the end of the sample period, turn off the cooling fan.

(16) Turn off the CVS or disconnect the exhaust tube from the tailpipe(s) of the vehicle.

(17) Repeat the steps in paragraph (b)(2) through (11) of this section for the hot start test, except only two evacuated sample bags, two methanol sample impingers, and two formaldehyde sample impingers are required. The step in paragraph (b)(8) of this section shall begin between 9 and 11 minutes after the end of the sample period for the cold start test.

(18) At the end of the deceleration which is scheduled to occur at 505 seconds, simultaneously turn off gas flow measuring device No. 1 and position the sample selector valve to the ''standby'' position. (Engine shutdown is not part of the hot start test sample period.) Record the measured roll or shaft revolutions.

(19) As soon as possible, transfer the hot start ''transient'' exhaust and dilution air bag samples to the analytical system and process the samples according to § 86.540 obtaining a stabilized reading of the bag exhaust sample on all analyzers within 20 minutes of the end of the sample collection phase of the test. Obtain methanol and formaldehyde sample analyses, if applicable, within 24 hours of the end of the sample period (if it is not possible to perform analysis on the methanol and formaldehyde samples within 24 hours, the samples should be stored in a dark, cold (~ 0 °C) environment until analysis).

(20) Disconnect the exhaust tube from the vehicle tailpipe(s) and remove the vehicle from dynamometer.

(21) The CVS or CFV may be turned off, if desired.

(22) Continuous monitoring of exhaust emissions will not normally be allowed. Specific written approval must be obtained from the Administrator for continuous monitoring of exhaust emissions.

[54 FR 14551, Apr. 11, 1989, as amended at 60 FR 34357, June 30, 1995]

§ 86.540–90 Exhaust sample analysis.

The following sequence of operations shall be performed in conjunction with each series of measurements:

(a) For CO, CO_2, gasoline-fueled, natural gas-fueled, liquefied petroleum gas-fueled and methanol-fueled motorcycle HC and, if appropriate, NO_X:

(1) Zero the analyzers and obtain a stable zero reading. Recheck after tests.

(2) Introduce span gases and set instrument gains. In order to avoid errors, span and calibrate at the same flow rates used to analyze the test sample. Span gases should have concentrations equal to 75 to 100 percent of full scale. If gain has shifted significantly on the analyzers, check the calibrations. Show actual concentrations on chart.

(3) Check zeros; repeat the procedure in paragraphs (a)(1) and (2) of this section if required.

(4) Check flow rates and pressures.

(5) Measure HC, CO, CO_2, and, if appropriate, NO_X. concentrations of samples.

(6) Check zero and span points. If difference is greater than 2 percent of full scale, repeat the procedure in paragraphs (a) (1) through (5) of this section.

(b) For CH_3OH (methanol-fueled vehicles), introduce test samples into the gas chromatograph and measure the concentration. This concentration is C_{MS} in the calculations.

(c) For HCHO (methanol-fueled vehicles), introduce test samples into the high pressure liquid chromatograph and measure the concentration of formaldehyde as a dinitropheylhydrazine derivative in acetonitrile. This concentration is C_{FS} in the calculations.

[54 FR 14552, Apr. 11, 1989, as amended at 59 FR 48515, Sept. 21, 1994; 60 FR 34357, June 30, 1995]

§ 86.542–90 Records required.

The following information shall be recorded with respect to each test:

(a) Test number.

(b) System or device tested (brief description).

(c) Date and time of day for each part of the test schedule.

(d) Instrument operator.

(e) Driver or operator.

(f) *Vehicle:* Make, Vehicle identification number, Model year, Transmission type, Odometer reading at initiation of preconditioning, Engine displacement, Engine family, Emission control system, Recommended idle RPM, Nominal fuel tank capacity, Inertial loading, Actual curb mass recorded at 0 kilometers, and Drive wheel tire pressure.

(g) *Dynamometer serial number:* As an alternative to recording the dynamometer serial number, a reference to a vehicle test cell number may be used, with the advance approval of the Administrator, provided the test cell records show the pertinent instrument information.

(h) All pertinent instrument information such as tuning-gain-serial number-detector number-range. As an alternative, a reference to a vehicle test cell number may be used, with the advance approval of the Administrator, provided test cell calibration records show the pertinent instrument information.

(i) Recorder Charts: Identify zero, span, exhaust gas, and dilution air sample traces.

(j) Test cell barometric pressure, ambient temperature and humidity.

NOTE: A central laboratory barometer may be used; *Provided*, that individual test cell barometric pressures are shown to be within ±0.1 percent of the barometric pressure at the central barometer location.

(k) [Reserved]

(l) Pressure of the mixture of exhaust and dilution air entering the CVS metering device, the pressure increase across the device, and the temperature at the inlet. The temperature may be recorded continuously or digitally to determine temperature variations.

(m) The number of revolutions of the positive displacement pump accumulated during each test phase while exhaust samples are being collected. The number of standard cubic meters metered by a critical flow venturi during each test phase would be the equivalent record for a CFV-CVS.

(n) The humidity of the dilution air.

NOTE: If conditioning columns are not used (see §§86.522 and 86.544) this measurement can be deleted. If the conditioning columns are used and the dilution air is taken from the test cell, the ambient humidity can be used for this measurement.

(o) The driving distance for each of the three phases of test, calculated from the measured roll or shaft revolutions.

(p) Additional required records for methanol-fueled vehicles:

(1) Specification of the methanol fuel, or fuel mixtures, used during testing.

(2) Volume of sample passed through the methanol sampling system and the volume of deionized water in each impinger.

(3) The methanol calibration information from the GC standards.

(4) The concentration of the GC analyses of the test samples (methanol).

(5) Volume of sample passed through the formaldehyde sampling system.

(6) The formaldehyde calibration information from the HPLC standards.

(7) The concentration of the HPLC analysis of the test sample (formaldehyde).

(q) *Additional required records for natural gas-fueled vehicles.* Composition, including all carbon containing compounds; e.g. CO_2, of the natural gas-fuel used during the test. C_1 and C_2 compounds shall be individually reported. C_3 and heavier hydrocarbons and C_6 and heavier compounds may be reported as a group.

(r) *Additional required records for liquefied petroleum gas-fueled vehicles.* Composition of the liquefied petroleum gas-fuel used during the test. Each hydrocarbon compound present, through C_4 compounds, shall be individually reported. C_5 and heavier hydrocarbons may be reported as a group.

[54 FR 14553, Apr. 11, 1989, as amended at 59 FR 48515, Sept. 21, 1994; 60 FR 34357, June 30, 1995]

§ 86.544–90 Calculations; exhaust emissions.

The final reported test results, with oxides of nitrogen being optional for model years prior to 2006 and required for 2006 and later model years, shall be computed by use of the following formula: (The results of all emission tests shall be rounded, in accordance with ASTM E29–93a (incorporated by reference in § 86.1), to the number of places to the right of the decimal point indicated by expressing the applicable standard to three significant figures.)

$$\text{(a)}\,Y_{wm} = 0.43\left(\frac{Y_{ct}+Y_s}{D_{ct}+D_s}\right) + 0.57\left(\frac{Y_{ht}+Y_s}{D_{ht}+D_s}\right)$$

Where:

(1) Y_{wm} = Weighted mass emissions of CO_2Or of each pollutant (*i.e.*, HC, CO, or NO_X) in grams per vehicle kilometer and if appropriate, the weighted carbon mass equivalent of total hydrocarbon equivalent, in grams per vehicle kilometer.

(2) Y_{ct} = Mass emissions as calculated from the ''transient'' phase of the cold-start test, in grams per test phase.

(3) Y_{ht} = Mass emissions as calculated from the ''transient'' phase of the hot-start test, in grams per test phase.

(4) Y_s = Mass emissions as calculated from the ''stabilized'' phase of the cold-start test, in grams per test phase.

(5) D_{ct} = The measured driving distance from the ''transient'' phase of the cold-start test, in kilometers.

(6) D_{ht} = The measured driving distance from the ''transient'' phase of the hot-start test, in kilometers.

(7) D_s = The measured driving distance from the ''stabilized'' phase of the cold-start test, in kilometers.

(b) The mass of each pollutant for each phase of both the cold-start test and the hot-start test is determined from the following:

(1) Hydrocarbon mass:

$$HC_{mass} = V_{mix} \times Density_{HC} \times (HC_{conc}/1{,}000{,}000)$$

(2) Oxides of nitrogen mass:

$$NOx_{mass} = V_{mix} \times Density_{NO2} \times K_H \times (NOx_{conc}/1{,}000{,}000)$$

(3) Carbon monoxide mass:

$$CO_{mass} = V_{mix} \times Density_{CO} \times (CO_{conc}/1{,}000{,}000)$$

(4) Carbon dioxide mass:

$$CO_{2mass} = V_{mix} \times Density_{CO2} \times (CO_{2conc}/100)$$

(5) Methanol mass:

$$CH_3OH_{mass} = V_{mix} \times Density_{CH3OH} \times (CH_3OH_{conc}/1{,}000{,}000)$$

(6) Formaldehyde mass:

$$HCHO_{mass} = V_{mix} \times Density_{HCHO} \times (HCHO_{conc}/1{,}000{,}000)$$

(7) Total hydrocarbon equivalent:

(i) $THCE = HC_{mass} + 13.8756/32.042 \times (CH_3OH)_{mass} + 13.8756/30.0262 \times (HCHO)_{mass}$

(c) Meaning of symbols:

(1)(i) HC_{mass} = Hydrocarbon emissions, in grams per test phase.

(ii) $Density_{HC}$=Density of HC in exhaust gas.

(A) *For gasoline-fuel;* $Density_{HC}$=576.8 g/m^3-carbon atom (16.33 g/ft^3-carbon atom), assuming an average carbon to hydrogen ratio of 1:1.85, at 20 °C (68 °F) and 101.3 kPa (760 mm Hg) pressure.

(B) *For natural gas and liquefied petroleum gas-fuel;* $Density_{HC}$=41.57(12.011+H/C(1.008)) g/m^3-carbon atom (1.1771(12.011+H/C(1.008)) g/ft^3-carbon atom) where H/C is the hydrogen to carbon ratio of the hydrocarbon components of test fuel, at 20 °C (68 °F) and 101.3 kPa (760mm Hg) pressure.

(iii)(A) HC_{conc} = Hydrocarbon concentration of the dilute exhaust sample corrected for background, in ppm carbon equivalent, *i.e.*, equivalent propane×3.

(B) $HC_{conc} = HC_e - HC_d(1 - (1/DF))$

Where:

(iv)(A) HC_e = Hydrocarbon concentrations of the dilute exhaust sample as measured, in ppm carbon equivalent (propane ppm×3).

(B) $HC_e = FIDHC_e - (r)C_{CH3OHe}$

(v) FID HC_e=Concentration of hydrocarbon (plus methanol if methanol-fueled motorcycle is tested) in dilute exhaust as measured by the FID ppm carbon equivalent.

(vi) r = FID response to methanol.

(vii) C_{CH30He} = Concentration of methanol in dilute exhaust as determined from the dilute exhaust methanol sample, ppm carbon.

(viii)(A) HC_d = Hydrocarbon concentration of the dilution air as measured, ppm carbon equivalent.

(B) $HC_d = FID\ HC_d - (r)C_{CH30Hd}$

(ix) FID HC_d=Concentration of hydrocarbon (plus methanol if methanol-fueled motorcycle is tested) in dilution air as measured by the FID, ppm carbon equivalent.

(x) C_{CH3OHd} = Concentration of methanol in dilution air as determined from dilution air methanol sample, ppm carbon.

(2)(i) NOx_{mass} = Oxides of nitrogen emissions, grams per test phase.

(ii) $Density_{N02}$ = Density of oxides of nitrogen in the exhaust gas, assuming they are in the form of nitrogen dioxide, 1913 g/m³ (54.16 g/ft³), at 20 °C (68 °F) and 101.3 kPa (760 mm Hg) pressure.

(iii)(A) NOx_{conc} = Oxides of nitrogen concentration of the dilute exhaust sample corrected for background, ppm.

(B) $NOx_{conc} = NOx_e - NOx_d(1 - (1/DF))$

Where:

(iv) NOx_e = Oxides of nitrogen concentration of the dilute exhaust sample as measured, ppm.

(v) NOx_d = Oxides of nitrogen concentration of the dilution air as measured, ppm.

(3)(i) CO_{mass} = Carbon monoxide emissions, in grams per test phase.

(ii) $Density_{CO}$ = Density of carbon monoxide, 1164 g/m³ (32.97 g/ft³), at 20 °C (68 °F) and 101.3 kPa (760 mm Hg) pressure.

(iii)(A) CO_{conc} = Carbon monoxide concentration of the dilute exhaust sample corrected for background, water vapor, and CO_2 extraction, ppm.

(B) $CO_{conc} = CO_e - CO_d(1 - (1/DF))$

Where:

(iv)(A) CO_e = Carbon monoxide concentration of the dilute exhaust sample volume corrected for water vapor and carbon dioxide extraction, in ppm.

(B) $CO_e = (1 - 0.01925CO_{2e} - 0.000323R)CO_{em}$ for gasoline-fueled vehicles with hydrogen to carbon ratio of 1.85:1

(C) $CO_e=[1 - (0.01+0.005HCR)\ CO_{2e} - 0.000323R]CO_{em}$ for methanol-fueled, natural gas-fueled or liquefied petroleum gas-fueled motorcycles, where HCR is hydrogen to carbon ratio as measured for the fuel used.

(v) CO_{em} = Carbon monoxide concentration of the dilute exhaust sample as measured, ppm

(vi) CO_{2e} = Carbon dioxide concentration of the dilute exhaust sample, pct.

(vii) R = Relative humidity of the dilution air, pct (*see* § 86.542(n)).

(viii)(A) CO_d = Carbon monoxide concentration of the dilution air corrected for water vapor extraction, ppm.

(B) $CO_d = (1 - 0.000323R)CO_{dm}$

Where:

(ix) CO_{dm} = Carbon monoxide concentration of the dilution air sample as measured, ppm.

NOTE: If a CO instrument which meets the criteria specified in § 86.511 is used and the conditioning column has been deleted, CO_{em} can be substituted directly for CO_e and CO_{dm} must be substituted directly for CO_d.

(4)(i) CO_{2mass} = Carbon dioxide emissions, grams per test phase.

(ii) $Density_{C02}$ = Density of carbon dioxide, 1830 g/m³ (51.81 g/ft³), at 20 °C (68 °F) and 101.3 kPa (760 mm Hg) pressure.

(iii)(A) CO_{2conc} = carbon dioxide concentration of the dilute exhaust sample corrected for background, in percent.

(B) $CO_{2conc} = CO_{2e} - CO_{2d}(1 - 1/DF)$

Where:

(iv) CO_{2d} = Carbon dioxide concentration of the dilution air as measured, in percent.

(5)(i) CH_3OH_{mass} = Methanol emissions corrected for background, grams per test phase.

(ii) $Density_{CH3OH}$ = Density of methanol is 1332 g/m³ (37.71 g/ft³), at 20 °C (68 °F) and 101.3 kPa (760 mm Hg) pressure.

(iii)(A) CH_3OH_{conc} = Methanol concentration of the dilute exhaust corrected for background, ppm.

(B) $CH_3OH_{conc} = C_{CH3OHe} - C_{CH3OHd}(1 - (1/DF))$

Where:

(iv)(A) C_{CH3OHe}=Methanol concentration in the dilute exhaust, ppm.

(B)

$$C_{CH3OHe} = \frac{3.813 \times 10^{-2} \times T_{EM}\left[\left(C_{S1} \times AV_{S1}\right) + \left(C_{S2} \times AV_{S2}\right)\right]}{P_B \times V_{EM}}$$

(v)(A) C_{CH3OHd}=Methanol concentration in the dilution air, ppm.

(B)

$$C_{CH3OHd} = \frac{3.813 \times 10^{-2} \times T_{DM}\left[\left(C_{D1} \times AV_{D1}\right) + \left(C_{D2} \times AV_{D2}\right)\right]}{P_B \times V_{DM}}$$

(vi) T_{EM}=Temperature of methanol sample withdrawn from dilute exhaust, °R.

(vii) T_{DM}=Temperature of methanol sample withdrawn from dilution air, °R.

(viii) P_B=Barometric pressure during test, mm Hg.

(ix) V_{EM}=Volume of methanol sample withdrawn from dilute exhaust, ft^3.

(x) V_{DM}=Volume of methanol sample withdrawn from dilution air, ft^3.

(xi) C_s=GC concentration of sample drawn from dilute exhaust, μg/ml.

(xii) C_D=GC concentration of sample drawn from dilution air, μg/ml.

(xiii) AV_s=Volume of absorbing reagent (deionized water) in impinger through which methanol sample from dilute exhaust is drawn, ml.

(xiv) AV_D=Volume of absorbing reagent (deionized water) in impinger through which methanol sample from dilution air is drawn, ml.

(xv) 1=first impinger.

(xvi) 2=second impinger.

(6)(i) $HCHO_{mass}$ = Formaldehyde emissions corrected for background, grams per test phase.

(ii) $Density_{HCHO}$ = Density of formaldehyde is 1249 g/m^3 (35.36 g/ft^3), at 20 °C (68 °F) and 101.3 kPa (760 mm Hg) pressure.

(iii)(A) $HCHO_{conc}$ = Formaldehyde concentration of the dilute exhaust corrected for background, ppm.

(B) $HCHO_{conc} = C_{HCHOe} - C_{HCHOd}\ (1 - (1/DF))$

Where:

(iv)(A) C_{HCHOe} = Formaldehyde concentration in dilute exhaust, ppm.

(B)

$$C_{HCHO_e} = \frac{4.069 \times 10^{-2} \times C_{FDE} \times V_{AE} \times Q \times T_{EF}}{V_{SE} \times P_B}$$

(v)(A) C_{HCHOd} = Formaldehyde concentration in dilution air, ppm.

(B)

$$C_{HCHOd} = \frac{4.069 \times 10^{-2} \times C_{FDA} \times V_{AA} \times Q \times T_{DF}}{V_{SA} \times P_B}$$

(vi) C_{FDE} = Concentration of DNPH derivative of formaldehyde from dilute exhaust sample in sampling solution, μg/ml.

(vii) V_{AE} = Volume of sampling solution for dilute exhaust formaldehyde sample, ml.

(viii)(A) Q = Ratio of molecular weights of formaldehyde to its DNPH derivative.

(B) Q = 0.1429

(ix) T_{EF} = Temperature of formaldehyde sample withdrawn from dilute exhaust, °R.

(x) V_{SE} = Volume of formaldehyde sample withdrawn from dilute exhaust, ft^3.

(xi) P_B = Barometric pressure during test, mm Hg.

(xii) C_{FDA} = Concentration of DNPH derivative of formaldehyde from dilution air sample in sampling solution, μg/ml.

(xiii) V_{AA} = Volume of sampling solution for dilution air formaldehyde sample, ml.

(xiv) T_{DF} = Temperature of formaldehyde sample withdrawn from dilution air, °R.

(xv) V_{SA} = Volume of formaldehyde sample withdrawn from dilution air, ft^3.

(7)(i) DF = $13.4/[CO_{2e} + (HC_e = CO_e)10^{-4}]$ for gasoline-fueled vehicles.

(ii) For methanol-fueled, natural gas-fueled or liquefied petroleum gas-fueled motorcycles, where fuel composition is $C_x H_y O_z$ as measured, or calculated, for the fuel used (for natural gas and liquefied petroleum gas-fuel, Z=0):

$$DF = \frac{(100)\dfrac{x}{(x + y/2 + 3.76)(x + y/2 - z/2)}}{CO_{2e} + (HC_e + CO_e + CH_3OH_e = HCHO_e) \times 10^{-4}}$$

(iii)(A) V_{mix} = Total dilute exhaust volume in cubic meters per test phase corrected to standard conditions (293 °K (528 °R) and 101.3 kPa (760 mm Hg)).

(B)

$$V_{mix} = \frac{V_o \times N \times (P_B - P_i) \times 293}{101.3 \times T_p}$$

Where:

(iv) V_o = Volume of gas pumped by the positive displacement pump, in cubic meters per revolution. This volume is dependent on the pressure differential across the positive displacement pump. (See calibration techniques in § 86.519.)

(v) N = Number of revolutions of the positive displacement pump during the test phase while samples are being collected.

(vi) P_B = Barometric pressure, kPa.

(vii) P_i = Pressure depression below atmospheric measured at the inlet to the positive displacement pump, kPa.

(viii) T_p = Average temperature of dilute exhaust entering positive displacement pump during test while samples are being collected, °K.

(ix)(A) K_h = Humidity correction factor.

(B) $K_h = 1/[1 - 0.0329(H - 10.71)]$

Where:

(x)(A) H = Absolute humidity in grams of water per kilogram of dry air.

(B) $H = [(6.211)R_a \times P_d]/[P_B - (P_d \times R_a/100)]$

(xi) R_a = Relative humidity of the ambient air, pct.

(xii) P_d = Saturated vapor pressure, in kPa at the ambient dry bulb temperature.

(xiii) P_B = Barometric pressure, kPa.

(d) Sample calculation of mass emission values for gasoline-fueled vehicles with engine displacements equal to or greater than 170 cc (10.4 cu. in.):

(1) For the ''transient'' phase of the cold-start test, assume V_o = 0.0077934 m^3 per rev; N = 12,115; R = 20.5 pct; R_a = 20.5 pct; P_B = 99.05 kPa; P_d = 3.382 kPa; P_i = 9.851 kPa; T_p = 309.8 °K; HC_e = 249.75 ppm carbon equivalent; NOx_e = 38.30 ppm; CO_{em} = 311.23 ppm; CO_{2e} = 0.415 percent; HC_d = 4.90 ppm; NOx_d = 0.30 ppm; CO_{dm} = 8.13 ppm; CO_{2d} = 0.037 pct; D_{ct} = 5.650 km.

Then:

(i) V_{mix} = [(0.0077934)(12,115)(99.05–9.851)(293.15)]/ [(101.325)(309.8)] = 78.651 m^3 per test phase.

(ii) H = [(6.211)(20.5)(3.382)]/[(99.05) − (3.382)(20.5/100)] = 4.378 grams H_2O per kg dry air.

(iii) K_h = 1/[1 − 0.0329(4.378 − 10.71)] = 0 8276

(iv) CO_e = [1 − 0.01925(0.415) − 0.000323 (20.5)](311.23) = 306.68 ppm.

(v) CO_d = [1 − 0.000323(20.5)](8.13) = 8.08 ppm.

(vi) DF = 13.4/[0.415 + (249.75 + 306.68)10^{-4}] = 28.472

(vii) HC_{conc} = 249.75 − 4.90(1 − 1/28.472) = 245.02 ppm.

(viii) HC_{mass} = (78.651) (576.8) (245.02) 10^{-6} = 11.114 grams per test phase.

(ix) NOx_{conc} = 38.30 − 0.30(1 − 1/28.472) = 38.01 ppm.

(x) NOx_{mass} = (78.651)(1913)(38.01)(0.8276) × 10^{-6} = 4.733 grams per test phase.

(xi) CO_{conc} = 306.68 − 8.08 (1 − 1/28.472) = 298.88 ppm.

(xii) CO_{mass} = (78.651) (1164) (298.88) (10^{-6}) = 27.362 grams per test phase.

(xiii) CO_{2conc} = 0.415 − 0.037 (1 − 1/28.472) = 0.3793 percent.

(xiv) CO_{2mass} = (78.651)(1843)(0.3793)/100 = 549.81 grams per test phase.

(2) For the ''stabilized'' portion of the cold-start test, assume that similar calculations resulted in HC_{mass} = 7.184 grams per test phase; NOx_{mass} = 2.154 grams per test phase; CO_{mass} = 64.541 grams per test phase; and CO_{2mass} = 529.52 grams per test phase. D_s = 6.070 km.

(3) For the ''transient'' portion of the hot-start test, assume that similar calculations resulted in HC_{mass} = 6.122 grams per test phase; NOx_{mass} = 7.056 grams per test phase; CO_{mass} = 34.964 grams per test phase; and CO_{2mass} = 480.93 grams per test phase. D_{ht} = 5.660 km.

(4) For a 1978 motorcycle with an engine displacement equal to or greater than 170 cc (10.4 cu. in):

(i) HC_{wm} = 0.43 [(11.114 + 7.184)/(5.650 + 6.070)] + 0.57 [(6.122 + 7.184)/(5.660 + 6.070)] = 1.318 grams per vehicle kilometer.

(ii) NOx_{wm} = 0.43 [(4.733 = 2.154)/(5.650 = 6.070)] = 0.57 [(7.056 = 2.154)/(5.660 = 6.070)] = 0.700 gram per vehicle kilometer.

(iii) CO_{wm} = 0.43 [(27.362 + 64.541)/(5.650 + 6.070)] + 0.57 [(34.964 + 64.541)/(5.660 + 6.070)] = 8.207 grams per vehicle kilometer.

(iv) CO_{2wm} = 0.43 [(549.81 + 529.52)/(5.650 + 6.070)] + 0.57 [(480.93 + 529.52)/(5.660 + 6.070)] = 88.701 grams per vehicle kilometer.

[54 FR 14553, Apr. 11, 1989, as amended at 59 FR 48515, Sept. 21, 1994; 60 FR 34358, June 30, 1995; 69 FR 2441, Jan. 15, 2004]