AUTHENTICATED
U.S. GOVERNMENT
INFORMATION
GPO

Code of Federal Regulations

40

Part 86 (§ 86.600–1 to End)

Revised as of July 1, 2006

Protection of Environment

Containing a codification of documents of general applicability and future effect

As of July 1, 2006

With Ancillaries

Published by
Office of the Federal Register
National Archives and Records
Administration

A Special Edition of the Federal Register

U.S. GOVERNMENT OFFICIAL EDITION NOTICE

Legal Status and Use of Seals and Logos

The seal of the National Archives and Records Administration (NARA) authenticates the Code of Federal Regulations (CFR) as the official codification of Federal regulations established under the Federal Register Act. Under the provisions of 44 U.S.C. 1507, the contents of the CFR, a special edition of the Federal Register, shall be judicially noticed. The CFR is prima facie evidence of the original documents published in the Federal Register (44 U.S.C. 1510).

It is prohibited to use NARA's official seal and the stylized Code of Federal Regulations logo on any republication of this material without the express, written permission of the Archivist of the United States or the Archivist's designee. Any person using NARA's official seals and logos in a manner inconsistent with the provisions of 36 CFR part 1200 is subject to the penalties specified in 18 U.S.C. 506, 701, and 1017.

Use of ISBN Prefix

This is the Official U.S. Government edition of this publication and is herein identified to certify its authenticity. Use of the 0–16 ISBN prefix is for U.S. Government Printing Office Official Editions only. The Superintendent of Documents of the U.S. Government Printing Office requests that any reprinted edition clearly be labeled as a copy of the authentic work with a new ISBN.

U.S. GOVERNMENT PRINTING OFFICE

U.S. Superintendent of Documents • Washington, DC 20402–0001

http://bookstore.gpo.gov

Phone: toll-free (866) 512-1800; DC area (202) 512-1800

Table of Contents

	Page
Explanation	v
Title 40:	
Chapter I—Environmental Protection Agency	3
Finding Aids:	
Material Approved for Incorporation by Reference	679
Table of CFR Titles and Chapters	683
Alphabetical List of Agencies Appearing in the CFR	701
List of CFR Sections Affected	711

Cite this Code: CFR

To cite the regulations in this volume use title, part and section number. Thus, 40 CFR 86.601–84 *refers to title 40, part 86, section 601–84.*

Explanation

The Code of Federal Regulations is a codification of the general and permanent rules published in the Federal Register by the Executive departments and agencies of the Federal Government. The Code is divided into 50 titles which represent broad areas subject to Federal regulation. Each title is divided into chapters which usually bear the name of the issuing agency. Each chapter is further subdivided into parts covering specific regulatory areas.

Each volume of the Code is revised at least once each calendar year and issued on a quarterly basis approximately as follows:

Title 1 through Title 16.....as of January 1
Title 17 through Title 27.....as of April 1
Title 28 through Title 41.....as of July 1
Title 42 through Title 50.....as of October 1

The appropriate revision date is printed on the cover of each volume.

LEGAL STATUS

The contents of the Federal Register are required to be judicially noticed (44 U.S.C. 1507). The Code of Federal Regulations is prima facie evidence of the text of the original documents (44 U.S.C. 1510).

HOW TO USE THE CODE OF FEDERAL REGULATIONS

The Code of Federal Regulations is kept up to date by the individual issues of the Federal Register. These two publications must be used together to determine the latest version of any given rule.

To determine whether a Code volume has been amended since its revision date (in this case, July 1, 2006), consult the ''List of CFR Sections Affected (LSA),'' which is issued monthly, and the ''Cumulative List of Parts Affected,'' which appears in the Reader Aids section of the daily Federal Register. These two lists will identify the Federal Register page number of the latest amendment of any given rule.

EFFECTIVE AND EXPIRATION DATES

Each volume of the Code contains amendments published in the Federal Register since the last revision of that volume of the Code. Source citations for the regulations are referred to by volume number and page number of the Federal Register and date of publication. Publication dates and effective dates are usually not the same and care must be exercised by the user in determining the actual effective date. In instances where the effective date is beyond the cutoff date for the Code a note has been inserted to reflect the future effective date. In those instances where a regulation published in the Federal Register states a date certain for expiration, an appropriate note will be inserted following the text.

OMB CONTROL NUMBERS

The Paperwork Reduction Act of 1980 (Pub. L. 96–511) requires Federal agencies to display an OMB control number with their information collection request.

Many agencies have begun publishing numerous OMB control numbers as amendments to existing regulations in the CFR. These OMB numbers are placed as close as possible to the applicable recordkeeping or reporting requirements.

OBSOLETE PROVISIONS

Provisions that become obsolete before the revision date stated on the cover of each volume are not carried. Code users may find the text of provisions in effect on a given date in the past by using the appropriate numerical list of sections affected. For the period before January 1, 2001, consult either the List of CFR Sections Affected, 1949–1963, 1964–1972, 1973–1985, or 1986–2000, published in 11 separate volumes. For the period beginning January 1, 2001, a ''List of CFR Sections Affected'' is published at the end of each CFR volume.

INCORPORATION BY REFERENCE

What is incorporation by reference? Incorporation by reference was established by statute and allows Federal agencies to meet the requirement to publish regulations in the Federal Register by referring to materials already published elsewhere. For an incorporation to be valid, the Director of the Federal Register must approve it. The legal effect of incorporation by reference is that the material is treated as if it were published in full in the Federal Register (5 U.S.C. 552(a)). This material, like any other properly issued regulation, has the force of law.

What is a proper incorporation by reference? The Director of the Federal Register will approve an incorporation by reference only when the requirements of 1 CFR part 51 are met. Some of the elements on which approval is based are:

(a) The incorporation will substantially reduce the volume of material published in the Federal Register.

(b) The matter incorporated is in fact available to the extent necessary to afford fairness and uniformity in the administrative process.

(c) The incorporating document is drafted and submitted for publication in accordance with 1 CFR part 51.

Properly approved incorporations by reference in this volume are listed in the Finding Aids at the end of this volume.

What if the material incorporated by reference cannot be found? If you have any problem locating or obtaining a copy of material listed in the Finding Aids of this volume as an approved incorporation by reference, please contact the agency that issued the regulation containing that incorporation. If, after contacting the agency, you find the material is not available, please notify the Director of the Federal Register, National Archives and Records Administration, Washington DC 20408, or call 202-741-6010.

CFR INDEXES AND TABULAR GUIDES

A subject index to the Code of Federal Regulations is contained in a separate volume, revised annually as of January 1, entitled CFR INDEX AND FINDING AIDS. This volume contains the Parallel Table of Statutory Authorities and Agency Rules (Table I). A list of CFR titles, chapters, and parts and an alphabetical list of agencies publishing in the CFR are also included in this volume.

An index to the text of ''Title 3—The President'' is carried within that volume.

The Federal Register Index is issued monthly in cumulative form. This index is based on a consolidation of the ''Contents'' entries in the daily Federal Register.

A List of CFR Sections Affected (LSA) is published monthly, keyed to the revision dates of the 50 CFR titles.

REPUBLICATION OF MATERIAL

There are no restrictions on the republication of textual material appearing in the Code of Federal Regulations.

INQUIRIES

For a legal interpretation or explanation of any regulation in this volume, contact the issuing agency. The issuing agency's name appears at the top of odd-numbered pages.

For inquiries concerning CFR reference assistance, call 202-741-6000 or write to the Director, Office of the Federal Register, National Archives and Records Administration, Washington, DC 20408 or e-mail fedreg.info@nara.gov.

SALES

The Government Printing Office (GPO) processes all sales and distribution of the CFR. For payment by credit card, call toll-free, 866-512-1800 or DC area, 202-512-1800, M-F, 8 a.m. to 4 p.m. e.s.t. or fax your order to 202-512-2250, 24 hours a day. For payment by check, write to the Superintendent of Documents, Attn: New Orders, P.O. Box 371954, Pittsburgh, PA 15250-7954. For GPO Customer Service call 202-512-1803.

ELECTRONIC SERVICES

The full text of the Code of Federal Regulations, the LSA (List of CFR Sections Affected), The United States Government Manual, the Federal Register, Public Laws, Public Papers, Weekly Compilation of Presidential Documents and the Privacy Act Compilation are available in electronic format at *www.gpoaccess.gov/nara* (''GPO Access''). For more information, contact Electronic Information Dissemination Services, U.S. Government Printing Office. Phone 202-512-1530, or 888-293-6498 (toll-free). E-mail, *gpoaccess@gpo.gov*.

The Office of the Federal Register also offers a free service on the National Archives and Records Administration's (NARA) World Wide Web site for public law numbers, Federal Register finding aids, and related information. Connect to NARA's web site at *www.archives.gov/federal-register*. The NARA site also contains links to GPO Access.

RAYMOND A. MOSLEY,
Director,
Office of the Federal Register.

July 1, 2006.

THIS TITLE

Title 40—PROTECTION OF ENVIRONMENT is composed of thirty-one volumes. The parts in these volumes are arranged in the following order: parts 1–49, parts 50–51, part 52 (52.01–52.1018), part 52 (52.1019–End), parts 53–59, part 60 (60.1–End), part 60 (Appendices), parts 61–62, part 63 (63.1–63.599), part 63 (63.600–63.1199), part 63 (63.1200–63.1439), part 63 (63.1440–63.6175), part 63 (63.6580–63.8830), part 63 (63.8980–End) parts 64–71, parts 72–80, parts 81–85, part 86 (86.1–86.599–99) part 86 (86.600–1–End), parts 87–99, parts 100–135, parts 136–149, parts 150–189, parts 190–259, parts 260–265, parts 266–299, parts 300–399, parts 400–424, parts 425–699, parts 700–789, and part 790 to End. The contents of these volumes represent all current regulations codified under this title of the CFR as of July 1, 2006.

Chapter I—Environmental Protection Agency appears in all thirty-one volumes. An alphabetical Listing of Pesticide Chemicals Index appears in parts 150–189. Regulations issued by the Council on Environmental Quality appear in the volume containing part 790 to End. The OMB control numbers for title 40 appear in § 9.1 of this chapter.

For this volume, Robert J. Sheehan was Chief Editor. The Code of Federal Regulations publication program is under the direction of Frances D. McDonald, assisted by Alomha S. Morris.

Title 40—Protection of Environment

(This book contains part 86)

Part

CHAPTER I—Environmental Protection Agency (Continued) 86

CHAPTER I—ENVIRONMENTAL PROTECTION AGENCY (CONTINUED)

EDITORIAL NOTES: 1. Subchapter C—Air programs is contained in volumes 40 CFR parts 50–51, part 52.01–52.1018, part 52.1019–end, parts 53–59, part 60, parts 61–62, part 63 (63.1–63.599), part 63 (63.600–63.1199), part 63 (63.1200–63.1439), part 63 (63.1440–end) parts 64–71, parts 72–80, parts 81–85, part 86 (86.1–86.599–99), part 86 (86.600–1 to end) and parts 87–99.

2. Nomenclature changes to chapter I appear at 65 FR 47324, 47325, Aug. 2, 2000; 66 FR 34375, 34376, June 28, 2001.

SUBCHAPTER C—AIR PROGRAMS (CONTINUED)

Part		*Page*
86	Control of emissions from new and in-use highway vehicles and engines	5

SUBCHAPTER C—AIR PROGRAMS (CONTINUED)

PART 86—CONTROL OF EMISSIONS FROM NEW AND IN-USE HIGHWAY VEHICLES AND ENGINES (CONTINUED)

Subpart G—Selective Enforcement Auditing of New Light-Duty Vehicles

Sec.
86.601–1—86.601–83 [Reserved]
86.601–84 Applicability.
86.602–84 Definitions.
86.602–97 Definitions.
86.602–98 Definitions.
86.603–88 Test orders.
86.603–97 Test orders.
86.603–98 Test orders.
86.604–84 Testing by the Administrator.
86.605–88 Maintenance of records; submittal of information.
86.605–98 Maintenance of records; submittal of information.
86.606–84 Entry and access.
86.607–84 Sample selection.
86.608–88 Test procedures.
86.608–90 Test procedures.
86.608–96 Test procedures.
86.608–97 Test procedures.
86.608–98 Test procedures.
86.609–84 Calculation and reporting of test results.
86.609–96 Calculation and reporting of test results.
86.609–97 Calculation and reporting of test results.
86.609–98 Calculation and reporting of test results.
86.610–96 Compliance with acceptable quality level and passing and failing criteria for Selective Enforcement Audits.
86.610–98 Compliance with acceptable quality level and passing and failing criteria for Selective Enforcement Audits.
86.612–84 Suspension and revocation of certificates of conformity.
86.612–97 Suspension and revocation of certificates of conformity.
86.614–84 Hearings on suspension, revocation, and voiding of certificates of conformity.
86.615–84 Treatment of confidential information.

Subpart H—General Provisions for In-Use Emission Regulations for 1994 and Later Model Year Light-Duty Vehicles and Light-Duty Trucks

86.701–94 General applicability.
86.702–94 Definitions.
86.703–94 Abbreviations.
86.704–94 Section numbering; construction.
86.705–94—86.707–94 [Reserved]
86.708–94 In-use emission standards for 1994 and later model year light-duty vehicles.
86.708–98 In-use emission standards for 1998 and later model year light-duty vehicles.
86.709–94 In-use emission standards for 1994 and later model year light-duty trucks.
86.709–99 In-use emission standards for 1999 and later model year light-duty trucks.

Subpart I—Emission Regulations for New Diesel Heavy-Duty Engines; Smoke Exhaust Test Procedure

86.884–1 General applicability.
86.884–2 Definitions.
86.884–3 Abbreviations.
86.884–4 Section numbering.
86.884–5 Test procedures.
86.884–6 Fuel specifications.
86.884–7 Dynamometer operation cycle for smoke emission tests.
86.884–8 Dynamometer and engine equipment.
86.884–9 Smoke measurement system.
86.884–10 Information.
86.884–11 Instrument checks.
86.884–12 Test run.
86.884–13 Data analysis.
86.884–14 Calculations.

Subpart J—Fees for the Motor Vehicle and Engine Compliance Program

86.901–93 Abbreviations.
86.902–01 Definitions.
86.902–93 Definitions.
86.903–93 Applicability.
86.904–93 Section numbering; construction.
86.905–93 Purpose.
86.906–93 MVEPC certification request types.
86.907–01 Fee amounts.
86.907–93 Fee amounts.
86.908–01 Waivers and refunds.
86.908–93 Waivers and refunds.
86.909–93 Payment.
86.910–93 Deficiencies.
86.911–93 Adjustments of fees.

Subpart K—Selective Enforcement Auditing of New Heavy-Duty Engines, Heavy-Duty Vehicles, and Light-Duty Trucks

86.1001–84 Applicability.
86.1002–84 Definitions.
86.1002–97 Definitions.
86.1002–2001 Definitions.
86.1003–90 Test orders.
86.1003–97 Test orders.
86.1003–2001 Test orders.
86.1004–84 Testing by the Administrator.

86.1005–90 Maintenance of records; submittal of information.
86.1006–84 Entry and access.
86.1007–84 Sample selection.
86.1008–90 Test procedures.
86.1008–96 Test procedures.
86.1008–97 Test procedures.
86.1008–2001 Test procedures.
86.1008–2004 Test procedures.
86.1009–84 Calculation and reporting of test results.
86.1009–96 Calculation and reporting of test results.
86.1009–97 Calculation and reporting of test results.
86.1009–2001 Calculation and reporting of test results.
86.1010–96 Compliance with acceptable quality level and passing and failing criteria for Selective Enforcement Audits.
86.1010–2001 Compliance with acceptable quality level and passing and failing criteria for Selective Enforcement Audits.
86.1012–84 Suspension and revocation of certificates of conformity.
86.1012–97 Suspension and revocation of certificates of conformity.
86.1014–84 Hearings on suspension, revocation and voiding of certificate of conformity.
86.1014–97 Hearings on suspension, revocation and voiding of certificates of conformity.
86.1015 Treatment of confidential information.

Subpart L—Nonconformance Penalties for Gasoline-Fueled and Diesel Heavy-Duty Engines and Heavy-Duty Vehicles, Including Light-Duty Trucks

86.1101–87 Applicability.
86.1102–87 Definitions.
86.1103–87 Criteria for availability of nonconformance penalties.
86.1104–91 Determination of upper limits.
86.1105–87 Emission standards for which nonconformance penalties are available.
86.1106–87 Production compliance auditing.
86.1107–87 Testing by the Administrator.
86.1108–87 Maintenance of records.
86.1109–87 Entry and access.
86.1110–87 Sample selection.
86.1111–87 Test procedures for PCA testing.
86.1112–87 Determining the compliance level and reporting of test results.
86.1113–87 Calculation and payment of penalty.
86.1114–87 Suspension and voiding of certificates of conformity.
86.1115–87 Hearing procedures for nonconformance determinations and penalties.
86.1116–87 Treatment of confidential information.

Subpart M—Evaporative Emission Test Procedures for New Gasoline-Fueled, Natural Gas-Fueled, Liquefied Petroleum Gas-Fueled and Methanol-Fueled Heavy-Duty Vehicles

86.1201–90 Applicability.
86.1202–85 Definitions.
86.1203–85 Abbreviations.
86.1204 Section numbering.
86.1205–90 Introduction; structure of subpart.
86.1206–90 Equipment required; overview.
86.1206–96 Equipment required; overview.
86.1207–90 Sampling and analytical systems; evaporative emissions.
86.1207–96 Sampling and analytical system; evaporative emissions.
86.1213–04 Fuel specifications.
86.1213–08 Fuel specifications.
86.1213–90 Fuel specifications.
86.1213–94 Fuel specifications.
86.1214–85 Analytical gases.
86.1215–85 EPA heavy-duty vehicle (HDV) urban dynamometer driving schedule.
86.1216–90 Calibrations; frequency and overview.
86.1217–90 Evaporative emission enclosure calibrations.
86.1217–96 Evaporative emission enclosure calibrations.
86.1218–85 Dynamometer calibration.
86.1221–90 Hydrocarbon analyzer calibration.
86.1226–85 Calibration of other equipment.
86.1227–90 Test procedures; overview.
86.1227–96 Test procedures; overview.
86.1228–85 Transmissions.
86.1229–85 Dynamometer load determination and fuel temperature profile.
86.1230–85 Test sequence; general requirements.
86.1230–96 Test sequence; general requirements.
86.1231–90 Vehicle preparation.
86.1231–96 Vehicle preparation.
86.1232–90 Vehicle preconditioning.
86.1232–96 Vehicle preconditioning.
86.1233–90 Diurnal breathing loss test.
86.1233–96 Diurnal emission test.
86.1234–96 Running loss test.
86.1235–85 Dynamometer procedure.
86.1235–96 Dynamometer procedure.
86.1236–85 Engine starting and restarting.
86.1237–85 Dynamometer runs.
86.1237–96 Dynamometer runs.
86.1238–90 Hot soak test.
86.1238–96 Hot soak test.
86.1242–90 Records required.
86.1243–90 Calculations; evaporative emissions.
86.1243–96 Calculations; evaporative emissions.

86.1246–96 Fuel dispensing spitback procedure.

Subpart N—Emission Regulations for New Otto-Cycle and Diesel Heavy-Duty Engines; Gaseous and Particulate Exhaust Test Procedures

86.1301 Scope; applicability.
86.1302–84 Definitions.
86.1303–84 Abbreviations.
86.1304 Section numbering; construction.
86.1305–90 Introduction; structure of subpart.
86.1305–2004 Introduction; structure of subpart.
86.1305–2010 Introduction; structure of subpart.
86.1306–07 Equipment required and specifications; overview.
86.1306–90 Equipment required and specifications; overview.
86.1306–96 Equipment required and specifications; overview.
86.1308–84 Dynamometer and engine equipment specifications.
86.1309–90 Exhaust gas sampling system; Otto-cycle and non-petroleum-fueled engines.
86.1310–90 Exhaust gas sampling and analytical system; diesel engines.
86.1310–2007 Exhaust gas sampling and analytical system for gaseous emissions from heavy-duty diesel-fueled engines and particulate emissions from all engines.
86.1311–90 Exhaust gas analytical system; CVS bag sample.
86.1311–94 Exhaust gas analytical system; CVS bag sample.
86.1312–88 Weighing chamber and microgram balance specifications.
86.1312–2007 Filter stabilization and microbalance workstation environmental conditions, microbalance specifications, and particulate matter filter handling and weighing procedures.
86.1313–91 Fuel specifications.
86.1313–94 Fuel specifications.
86.1313–98 Fuel specifications.
86.1313–2004 Fuel specifications.
86.1313–2007 Fuel specifications.
86.1314–84 Analytical gases.
86.1314–94 Analytical gases.
86.1316–90 Calibrations; frequency and overview.
86.1316–94 Calibrations; frequency and overview.
86.1318–84 Engine dynamometer system calibrations.
86.1319–84 CVS calibration.
86.1319–90 CVS calibration.
86.1320–90 Gas meter or flow instrumentation calibration; particulate, methanol, and formaldehyde measurement.
86.1321–90 Hydrocarbon analyzer calibration.
86.1321–94 Hydrocarbon analyzer calibration.
86.1322–84 Carbon monoxide analyzer calibration.
86.1323–84 Oxides of nitrogen analyzer calibration.
86.1323–2007 Oxides of nitrogen analyzer calibration.
86.1324–84 Carbon dioxide analyzer calibration.
86.1325–94 Methane analyzer calibration.
86.1326–90 Calibration of other equipment.
86.1327–90 Engine dynamometer test procedures; overview.
86.1327–94 Engine dynamometer test procedures; overview.
86.1327–96 Engine dynamometer test procedures; overview.
86.1327–98 Engine dynamometer test procedures; overview.
86.1330–84 Test sequence; general requirements.
86.1330–90 Test sequence; general requirements.
86.1332–90 Engine mapping procedures.
86.1333–90 Transient test cycle generation.
86.1333–2010 Transient test cycle generation.
86.1334–84 Pre-test engine and dynamometer preparation.
86.1335–90 Cool-down procedure.
86.1336–84 Engine starting, restarting, and shutdown.
86.1337–90 Engine dynamometer test run.
86.1337–96 Engine dynamometer test run.
86.1337–2007 Engine dynamometer test run.
86.1338–84 Emission measurement accuracy.
86.1338–2007 Emission measurement accuracy.
86.1339–90 Particulate filter handling and weighing.
86.1340–90 Exhaust sample analysis.
86.1340–94 Exhaust sample analysis.
86.1341–90 Test cycle validation criteria.
86.1341–98 Test cycle validation criteria.
86.1342–90 Calculations; exhaust emissions.
86.1342–94 Calculations; exhaust emissions.
86.1343–88 Calculations; particulate exhaust emissions.
86.1344–90 Required information.
86.1344–94 Required information.
86.1360–2007 Supplemental emission test; test cycle and procedures.
86.1362–2007 Steady-state testing with a ramped-modal cycle.
86.1363–2007 Steady-state testing with a discrete-mode cycle.
86.1370–2007 Not-To-Exceed test procedures.
86.1372–2007 Measuring smoke emissions within the NTE zone.
86.1375–2007 Equipment specifications for field testing.

86.1380–2004 Load response test.

Subpart O—Emission Regulations for New Gasoline-Fueled Otto-Cycle Light-Duty Vehicles and New Gasoline-Fueled Otto-Cycle Light-Duty Trucks; Certification Short Test Procedures

86.1401 Scope; applicability.
86.1402 Definitions.
86.1403 Abbreviations.
86.1404 [Reserved]
86.1405 Introduction; structure of subpart.
86.1406 Equipment required and specifications; overview.
86.1407–86.1412 [Reserved]
86.1413 Fuel specifications.
86.1414–86.1415 [Reserved]
86.1416 Calibration; frequency and overview.
86.1417–86.1421 [Reserved]
86.1422 Analyzer calibration.
86.1423–86.1426 [Reserved]
86.1427 Certification Short Test procedure; overview.
86.1428–86.1429 [Reserved]
86.1430 Certification Short Test sequence; general requirements.
86.1431 [Reserved]
86.1432 Vehicle preparation.
86.1433 [Reserved]
86.1434 Equipment preparation.
86.1435–86.1436 [Reserved]
86.1437 Test run—manufacturer.
86.1438 Test run—EPA.
86.1439 Certification Short Test emission test procedures—EPA.
86.1440–86.1441 [Reserved]
86.1442 Information required.

Subpart P—Emission Regulations for Otto-Cycle Heavy-Duty Engines, New Methanol-Fueled Natural Gas-Fueled, and Liquefied Petroleum Gas-Fueled Diesel-Cycle Heavy-Duty Engines, New Otto-Cycle Light-Duty Trucks, and New Methanol-Fueled Natural Gas-Fueled, and Liquefied Petroleum Gas-Fueled Diesel-Cycle Light-Duty Trucks; Idle Test Procedures

86.1501–90 Scope; applicability.
86.1501–94 Scope; applicability.
86.1502–84 Definitions.
86.1503–84 Abbreviations.
86.1504–90 Section numbering; construction.
86.1504–94 Section numbering; construction.
86.1505–84 Introduction; structure of subpart.
86.1505–90 Introduction; structure of subpart.
86.1505–94 Introduction; structure of subpart.
86.1506–90 Equipment required and specifications; overview.
86.1506–94 Equipment required and specifications; overview.
86.1509–84 Exhaust gas sampling system.
86.1511–84 Exhaust gas analysis system.
86.1513–90 Fuel specifications.
86.1513–94 Fuel specifications.
86.1514–84 Analytical gases.
86.1516–84 Calibration; frequency and overview.
86.1519–84 CVS calibration.
86.1522–84 Carbon monoxide analyzer calibration.
86.1524–84 Carbon dioxide analyzer calibration.
86.1526–84 Calibration of other equipment.
86.1527–84 Idle test procedure; overview.
86.1530–84 Test sequence; general requirements.
86.1537–84 Idle test run.
86.1540–84 Idle exhaust sample analysis.
86.1542–84 Information required.
86.1544–84 Calculation; idle exhaust emissions.

Subpart Q—Regulations for Altitude Performance Adjustments for New and In-Use Motor Vehicles and Engines

86.1601 General applicability.
86.1602 Definitions.
86.1603 General requirements.
86.1604 Conditions for disapproval.
86.1605 Information to be submitted.
86.1606 Labeling.

Subpart R—General Provisions for the Voluntary National Low Emission Vehicle Program for Light-Duty Vehicles and Light-Duty Trucks

86.1701–99 General applicability.
86.1702–99 Definitions.
86.1703–99 Abbreviations.
86.1704–99 Section numbering; construction.
86.1705–99 General provisions; opt-in.
86.1706–99 National LEV program in effect.
86.1707–99 General provisions; opt-outs.
86.1708–99 Exhaust emission standards for 1999 and later light-duty vehicles.
86.1709–99 Exhaust emission standards for 1999 and later light light-duty trucks.
86.1710–99 Fleet average non-methane organic gas exhaust emission standards for light-duty vehicles and light light-duty trucks.
86.1711–99 Limitations on sale of Tier 1 vehicles and TLEVs.
86.1712–99 Maintenance of records; submittal of information.
86.1713–01 [Reserved]
86.1713–99 Light-duty exhaust durability programs; five percent cap.
86.1714–01 [Reserved]
86.1714–99 Small-volume manufacturers certification procedures.
86.1715–01 [Reserved]
86.1715–99 [Reserved]
86.1716–01 [Reserved]
86.1716–99 Prohibition of defeat devices.

86.1717–01 Emission control diagnostic system for 1999 and later light-duty vehicles and light-duty trucks.
86.1717–99 Emission control diagnostic system for 1999 and later light-duty vehicles and light-duty trucks.
86.1718–99—86.1720–99 [Reserved]
86.1721–01 Application for certification.
86.1721–99 Application for certification.
86.1722–01 [Reserved]
86.1722–99 [Reserved]
86.1723–01 [Reserved]
86.1723–99 Required data.
86.1724–01 Emission data vehicle selection.
86.1724–99 Test vehicles and engines.
86.1725–01 Allowable maintenance.
86.1725–99 Maintenance.
86.1726–01 [Reserved]
86.1726–99 Mileage and service accumulation; emission measurements.
86.1727–99 [Reserved]
86.1728–01 Compliance with emission standards for the purpose of certification.
86.1728–99 Compliance with emission standards.
86.1729–99—86.1733–99 [Reserved]
86.1734–01 [Reserved]
86.1734–99 Alternative procedure for notification of additions and changes.
86.1735–01 Labeling.
86.1735–99 Labeling.
86.1736–99—86.1769–99 [Reserved]
86.1770–99 All-Electric Range Test requirements.
86.1771–99 Fuel specifications.
86.1772–99 Road load power, test weight, and inertia weight class determination.
86.1773–99 Test sequence; general requirements.
86.1774–99 Vehicle preconditioning.
86.1775–99 Exhaust sample analysis.
86.1776–99 Records required.
86.1777–99 Calculations; exhaust emissions.
86.1778–99 Calculations; particulate emissions.
86.1779–99 General enforcement provisions.
86.1780–99 Prohibited acts.

Subpart S—General Compliance Provisions for Control of Air Pollution From New and In-Use Light-Duty Vehicles, Light-Duty Trucks, and Complete Otto-Cycle Heavy-Duty Vehicles

86.1801–01 Applicability.
86.1802–01 Section numbering; construction.
86.1803–01 Definitions.
86.1804–01 Acronyms and abbreviations.
86.1805–01 Useful life.
86.1805–04 Useful life.
86.1806–01 On-board diagnostics.
86.1806–04 On-board diagnostics.
86.1806–05 On-board diagnostics.
86.1807–01 Vehicle labeling.
86.1807–07 Vehicle labeling.
86.1808–01 Maintenance instructions.
86.1808–07 Maintenance instructions.
86.1809–01 Prohibition of defeat devices.
86.1810–01 General standards; increase in emissions; unsafe conditions; waivers
86.1811–01 Emission standards for light-duty vehicles.
86.1811–04 Emission standards for light-duty vehicles, light-duty trucks and medium-duty passenger vehicles.
86.1812–01 Emission standards for light-duty trucks 1.
86.1813–01 Emission standards for light-duty trucks 2.
86.1814–01 Emission standards for light-duty trucks 3.
86.1814–02 Emission standards for light-duty trucks 3.
86.1815–01 Emission standards for light-duty trucks 4.
86.1815–02 Emission standards for light-duty trucks 4.
86.1816–05 Emission standards for complete heavy-duty vehicles.
86.1816–08 Emission standards for complete heavy-duty vehicles.
86.1817–05 Complete heavy-duty vehicle averaging, trading, and banking program.
86.1817–08 Complete heavy-duty vehicle averaging, trading, and banking program.
86.1818–86.1819 [Reserved]
86.1820–01 Durability group determination.
86.1821–01 Evaporative/refueling family determination.
86.1822–01 Durability data vehicle selection.
86.1823–01 Durability demonstration procedures for exhaust emissions.
86.1823–08 Durability demonstration procedures for exhaust emissions.
86.1824–01 Durability demonstration procedures for evaporative emissions.
86.1824–07 Durability demonstration procedures for evaporative emissions.
86.1824–08 Durability demonstration procedures for evaporative emissions.
86.1825–01 Durability demonstration procedures for refueling emissions.
86.1825–08 Durability demonstration procedures for refueling emissions.
86.1826–01 Assigned deterioration factors for small volume manufacturers and small volume test groups.
86.1827–01 Test group determination.
86.1828–01 Emission data vehicle selection.
86.1829–01 Durability and emission testing. requirements; waivers.
86.1830–01 Acceptance of vehicles for emission testing.
86.1831–01 Mileage accumulation requirements for test vehicles.
86.1832–01 Optional equipment and air conditioning for test vehicles.
86.1833–01 Adjustable parameters.
86.1834–01 Allowable maintenance.
86.1835–01 Confirmatory certification testing.

86.1836–01 Manufacturer-supplied production vehicles for testing.
86.1837–01 Rounding of emission measurements.
86.1838–01 Small volume manufacturers certification procedures.
86.1839–01 Carryover of certification data.
86.1840–01 Special test procedures.
86.1841–01 Compliance with emission standards for the purpose of certification.
86.1842–01 Addition of a vehicle after certification; and changes to a vehicle covered by certification.
86.1843–01 General information requirements.
86.1844–01 Information requirements: Application for certification and submittal of information upon request.
86.1845–01 Manufacturer in-use verification testing requirements.
86.1845–04 Manufacturer in-use verification testing requirements.
86.1846–01 Manufacturer in-use confirmatory testing requirements.
86.1847–01 Manufacturer in-use verification and in-use confirmatory testing; submittal of information and maintenance of records.
86.1848–01 Certification.
86.1849–01 Right of entry.
86.1850–01 Denial, suspension or revocation of certificate of conformity.
86.1851–01 Application of good engineering judgment to manufacturers' decisions.
86.1852–01 Waivers for good in-use emission performance.
86.1853–01 Certification hearings.
86.1854–86.1859 [Reserved]
86.1860–04 How to comply with the Tier 2 and interim non-Tier 2 fleet average NO_X standards.
86.1861–04 How do the Tier 2 and interim non-Tier 2 NO_X averaging, banking and trading programs work?
86.1862–04 Maintenance of records and submittal of information relevant to compliance with fleet average NO_X standards.
86.1863–07 Optional chassis certification for diesel vehicles.
APPENDIX I TO SUBPART S—VEHICLE PROCUREMENT METHODOLOGY
APPENDIX II TO SUBPART S—AS-RECEIVED TESTING VEHICLE REJECTION CRITERIA
APPENDIX III TO SUBPART S—AS-RECEIVED INSPECTION

Subpart T—Manufacturer-Run In-Use Testing Program for Heavy-Duty Diesel Engines

86.1901 What testing requirements apply to my engines that have gone into service?
86.1905 How does this program work?
86.1908 How must I select and screen my in-use engines?
86.1910 How must I prepare and test my in-use engines?
86.1912 How do I determine whether an engine meets the vehicle-pass criteria?
86.1915 What are the requirements for Phase 1 and Phase 2 testing?
86.1917 How does in-use testing under this subpart relate to the emission-related warranty in Section 207(a)(1) of the Clean Air Act?
86.1920 What in-use testing information must I report to EPA?
86.1925 What records must I keep?
86.1930 What special provisions apply from 2005 through 2007?
86.1935 What special provisions may apply as a consequence of a delay in the accuracy margin report for portable emission measurement systems?
APPENDIX I TO SUBPART T—SAMPLE GRAPHICAL SUMMARY OF NTE EMISSION RESULTS
APPENDIX I TO PART 86—URBAN DYNAMOMETER SCHEDULES
APPENDIX II TO PART 86—TEMPERATURE SCHEDULES
APPENDIX III TO PART 86—CONSTANT VOLUME SAMPLER FLOW CALIBRATION
APPENDIX IV TO PART 86—DURABILITY DRIVING SCHEDULES
APPENDIX V TO PART 86—THE STANDARD ROAD CYCLE (SRC)
APPENDIX VI TO PART 86—VEHICLE AND ENGINE COMPONENTS
APPENDIX VII TO PART 86—STANDARD BENCH CYCLE (SBC)
APPENDIX VIII TO PART 86—AGING BENCH EQUIPMENT AND PROCEDURES
APPENDIX IX TO PART 86—EXPERIMENTALLY DETERMINING THE R-FACTOR FOR BENCH AGING DURABILITY PROCEDURES
APPENDIX X TO PART 86—SAMPLING PLANS FOR SELECTIVE ENFORCEMENT AUDITING OF HEAVY-DUTY ENGINES AND LIGHT-DUTY TRUCKS
APPENDIX XI TO PART 86—SAMPLING PLANS FOR SELECTIVE ENFORCEMENT AUDITING OF LIGHT-DUTY VEHICLES
APPENDIX XII TO PART 86—TABLES FOR PRODUCTION COMPLIANCE AUDITING OF HEAVY-DUTY ENGINES AND HEAVY-DUTY VEHICLES, INCLUDING LIGHT-DUTY TRUCKS
APPENDIX XIII TO PART 86—STATE REQUIREMENTS INCORPORATED BY REFERENCE IN PART 86 OF THE CODE OF FEDERAL REGULATIONS
APPENDIX XIV TO PART 86—DETERMINATION OF ACCEPTABLE DURABILITY TEST SCHEDULE FOR LIGHT-DUTY VEHICLES AND LIGHT LIGHT-DUTY TRUCKS CERTIFYING TO THE PROVISIONS OF PART 86, SUBPART R
APPENDIX XV TO PART 86—PROCEDURE FOR DETERMINING AN ACCEPTABLE EXHAUST REGENERATION DURABILITY-DATA TEST SCHEDULE FOR DIESEL CYCLE VEHICLES EQUIPPED WITH PERIODICALLY REGENERATING TRAP OXIDIZER SYSTEMS CERTIFYING TO THE PROVISIONS OF PART 86, SUBPART R

APPENDIX XVI TO PART 86—POLLUTANT MASS EMISSIONS CALCULATION PROCEDURE FOR GASEOUS-FUELED VEHICLES AND FOR VEHICLES EQUIPPED WITH PERIODICALLY REGENERATING TRAP OXIDIZER SYSTEMS CERTIFYING TO THE PROVISIONS OF PART 86, SUBPART R

APPENDIX XVII TO PART 86—PROCEDURE FOR DETERMINING VEHICLE EMISSION CONTROL TECHNOLOGY CATEGORY/FUEL REACTIVITY ADJUSTMENT FACTORS FOR LIGHT-DUTY VEHICLES AND LIGHT LIGHT-DUTY TRUCKS CERTIFYING TO THE PROVISIONS OF PART 86, SUBPART R

APPENDIX XVIII TO PART 86—STATISTICAL OUTLIER IDENTIFICATION PROCEDURE FOR LIGHT-DUTY VEHICLES AND LIGHT LIGHT-DUTY TRUCKS CERTIFYING TO THE PROVISIONS OF PART 86, SUBPART R

AUTHORITY: 42 U.S.C. 7401–7671q.

EDITORIAL NOTE: Nomenclature changes to part 86 appear at 60 FR 34377, June 30, 1995.

Subpart G—Selective Enforcement Auditing of New Light-Duty Vehicles

SOURCE: 41 FR 31483, July 28, 1976, unless otherwise noted.

§§ 86.601–1—86.601–83 [Reserved]

§ 86.601–84 Applicability.

For 1984 and later model year light-duty vehicles, all provisions of this subpart are applicable. The provisions of this subpart are not applicable to 1984 and later model year light-duty trucks.

(a) *Section numbering; construction.* (1) The model year of initial applicability is indicated by the two digits following the hyphen of the section number. A section remains in effect for subsequent model years until it is superseded.

(2) A section reference without a model year suffix shall be interpreted to be a reference to the section applicable to the appropriate model year.

(b) References in this subpart to engine families and emission control systems shall be deemed to refer to durability groups and test groups as applicable for manufacturers certifying new light-duty vehicles and light-duty trucks under the provisions of subpart S of this part.

(Secs. 206, 208(a) and 301(a), Clean Air Act, as amended, 42 U.S.C. 7525, 7542(a) and 7601(a))

[49 FR 69, Jan. 3, 1984. Redesignated at 54 FR 2122, Jan. 19, 1989, as amended at 62 FR 31234, June 6, 1997; 64 FR 23922, May 4, 1999]

§ 86.602–84 Definitions.

(a) The definitions in this section apply to this subpart.

(b) As used in this subpart, all terms not defined herein have the meaning given them in the Act.

(1) *Acceptable Quality Level* (AQL) means the maximum percentage of failing vehicles that, for purposes of sampling inspection, can be considered satisfactory as a process average.

(2) *Axle Ratio* means all ratios within ±3% of the axle ratio specified in the configuration in the test order.

(3) *Configuration* means a subclassification of an engine-system combination on the basis of engine code, inertia weight class, transmission type and gear ratios, axle ratio, and other parameters which may be designated by the Administrator.

(4) *Test Sample* means the collection of vehicles of the same configuration which have been drawn from the population of vehicles of that configuration and which will receive exhaust emission testing.

(5) *Inspection Criteria* means the pass and fail numbers associated with a particular sampling plan.

(6) *Vehicle* means any new production light-duty vehicle as defined in subpart A of this part.

(7) *Test Vehicle* means a vehicle in a test sample.

(8) *In the Hands of the Manufacturer* means that vehicles are still in the possession of the manufacturer and have not had their bills of lading transferred to another person for the purpose of transporting.

[49 FR 48480, Dec. 12, 1984. Redesignated at 54 FR 2122, Jan. 19, 1989]

§ 86.602–97 Definitions.

Section 86.602–97 includes text that specifies requirements that differ from those specified in § 86.602-84. Where a paragraph in § 86.602–84 is identical and

applicable to § 86.602–97, this may be indicated by specifying the corresponding paragraph and the statement ''[Reserved]. For guidance see § 86.602–84.''

(a) through (b)(8) [Reserved]. For guidance see § 86.602–84.

(b)(9) *Executive Officer* means the Executive Officer of the California Air Resources Board or his or her authorized representative.

(10) *Executive Order* means the document the Executive Officer grants a manufacturer for an engine family that certifies the manufacturer has verified that the engine family complies with all applicable standards and requirements pursuant to Title 13 of the California Code of Regulations.

(11) *50-state engine family* means an engine family that meets both federal and California Air Resources Board motor vehicle emission control regulations and has received a federal certificate of conformity as well as an Executive Order.

[62 FR 31234, June 6, 1997]

§ 86.602–98 Definitions.

Section 86.602–98 includes text that specifies requirements that differ from § 86.602–84. Where a paragraph in § 86.602–84 is identical and applicable to § 86.602–98, this may be indicated by specifying the corresponding paragraph and the statement ''[Reserved]. For guidance see § 86.602–84.'' Where a corresponding paragraph of § 86.602–84 is not applicable, this is indicated by the statement ''[Reserved].''.

(a) through (b)(2) [Reserved]. For guidance see § 86.602–84.

(b)(3)(i) *Configuration*, when used for LDV exhaust emissions testing, means a subclassification of an engine-system combination on the basis of engine code, inertia weight class, transmission type and gear ratios, axle ratio, and other parameters which may be designated by the Administrator.

(ii) *Configuration*, when used for LDV refueling emissions testing, means a subclassification of an evaporative/refueling emission family on the basis of evaporative and refueling control system and other parameters which may be designated by the Administrator.

(4) *Test sample* means the collection of vehicles of the same configuration which have been drawn from the population of vehicles of that configuration and which will receive emission testing.

(b)(5) through (b)(8) [Reserved]. For guidance see § 86.602–84.

(9) *Executive Officer* means the Executive Officer of the California Air Resources Board or his or her authorized representative.

(10) *Executive Order* means the document the Executive Officer grants a manufacturer for an engine family that certifies the manufacturer has verified that the engine family complies with all applicable standards and requirements pursuant to Title 13 of the California Code of Regulations.

(11) *50-state engine family* means an engine family that meets both federal and California Air Resources Board motor vehicle emission control regulations and has received a federal certificate of conformity as well as an Executive Order.

[59 FR 16300, Apr. 6, 1994, as amended at 62 FR 31234, June 6, 1997]

§ 86.603–88 Test orders.

(a) The Administrator will require any testing under this subpart by means of a test order addressed to the manufacturer.

(b) The test order will be signed by the Assistant Administrator for Air and Radiation or his designee. The test order will be delivered in person by an EPA Enforcement Officer to a company representative or sent by registered mail, return receipt requested, to the manufacturer's representative who signs the Application for Certification submitted by the manufacturer pursuant to the requirements of the applicable sections of subpart A of this part. Upon receipt of a test order, the manufacturer shall comply with all of the provisions of this subpart and instructions in the test order.

(c)(1) The test order will specify the vehicle configuration selected for testing, the time and location at which vehicles must be selected, and the procedure by which vehicles of the specified configuration must be selected. The test order may specify the number of vehicles to be selected per day and may include alternative configurations (primary, secondary, etc.) to be selected

for testing in the event that vehicles of the first specified configuration are not available for testing because those vehicles are not being manufactured at the specified assembly plant, not being manufactured during the specified time, or not being stored at the specified assembly plant or associated storage facility. If total production of the specified vehicle configuration is less than the number specified in the test order, the manufacturer will select the actual number of vehicles produced per day. If the first specified configuration is not being manufactured at a rate of at least four vehicles per day over the expected duration of the audit, the Assistant Administrator for Air and Radiation or his designated representative may select vehicles of a primary alternate configuration for testing in lieu of the first specified configuration. Likewise, vehicles of a secondary alternate configuration may be selected in lieu of vehicles of the first specified configuration or primary alternate configuration. In addition, the test order may include other directions or information essential to the administration of the required testing.

(2) The following instructions are applicable to each test order issued under this subpart:

(i) The manufacturer shall make the following documents available to an EPA Enforcement Officer upon request:

(A) A properly filed and current Application for Certification following the format prescribed by the EPA for the appropriate model year; and

(B) A copy of the shop manual, dealer service bulletins, and pre-delivery inspection procedures for the configuration being tested.

(ii) Only one mechanic at a time per vehicle shall make authorized checks, adjustments, or repairs, unless a particular check, adjustment, or repair requires a second mechanic as indicated in the shop manual or dealer service bulletins.

(iii) A mechanic shall not perform any check, adjustment, or repair without an Enforcement Officer present unless otherwise authorized.

(iv) The manufacturer shall utilize only those tools and test equipment utilized by its dealers when performing authorized checks, adjustments, or repairs.

(d) A manufacturer may indicate preferred assembly plants for the various engine families produced by the manufacturer for selection of vehicles in response to a test order. This shall be accomplished by submitting a list of engine families and the corresponding assembly plants from which the manufacturer desires to have vehicles selected to the Administrator. In order that a manufacturer's preferred location for issuance of a test order for a configuration of a particular engine family be considered, the list must be submitted prior to issuance of the test order. Notwithstanding the fact that a manufacturer has submitted the above list, the Administrator may, upon making the determination that evidence exists indicating noncompliance at other than the manufacturer's preferred plant, order testing at such other plant where vehicles of the configuration specified in the test order are assembled.

(e) During a given model year, the Administrator shall not issue to a manufacturer more SEA test orders than an annual limit determined by dividing the projected sales bound for the U.S. market for that model year, as made by the manufacturer in its report submitted under paragraph (a)(2) of § 600.207–80 of the Automobile Fuel Economy Regulations, by 300,000 and rounding to the nearest whole number, unless the projected sales are less than 150,000, in which case the annual limit is one. However, the annual limit for SEA test orders will be recalculated if a manufacturer submits to EPA in writing prior to or during the model year a sales projection update.

(1) Any SEA test order for which the configuration fails in accordance with § 86.610 or for which testing is not completed does not count against the annual limit.

(2) When the annual limit has been met, the Administrator may issue additional test orders for those configurations for which evidence exists indicating noncompliance. An SEA test order issued on this basis will include a

statement as to the reason for its issuance.

[41 FR 31483, July 28, 1976, as amended at 43 FR 4552, Feb. 2, 1978; 49 FR 48480, Dec. 12, 1984. Redesignated and amended at 54 FR 2122, Jan. 19, 1989]

§ 86.603–97 Test orders.

Section 86.603–97 includes text that specifies requirements that differ from those specified in § 86.603–88. Where a paragraph in § 86.603–88 is identical and applicable to § 86.603–97, this may be indicated by specifying the corresponding paragraph and the statement ''[Reserved]. For guidance see § 86.603–88.''

(a) through (e) [Reserved]. For guidance see § 86.603–88.

(f) In the event evidence exists indicating an engine family is in noncompliance, the Administrator may, in addition to other powers provided by this section, issue a test order specifying the engine family the manufacturer is required to test.

[62 FR 31234, June 6, 1997]

§ 86.603–98 Test orders.

Section 86.603–98 includes text that specifies requirements that differ from § 86.603–88. Where a paragraph in § 86.603–88 is identical and applicable to § 86.603–98, this may be indicated by specifying the corresponding paragraph and the statement ''[Reserved]. For guidance see § 86.603–88.'' Where a corresponding paragraph of § 86.603–88 is not applicable, this is indicated by the statement ''[Reserved].''.

(a) through (c) [Reserved]. For guidance see § 86.603–88.

(d) A manufacturer may indicate preferred assembly plants for the various engine families and evaporative/refueling families produced by the manufacturer for selection of vehicles in response to a test order. This shall be accomplished by submitting a list of engine families with the associated evaporative/refueling families, and the corresponding assembly plants from which the manufacturer desires to have vehicles selected, to the Administrator. In order that a manufacturer's preferred location for issuance of a test order for a configuration of a particular engine family and/or evaporative/refueling family be considered, the list must be submitted prior to issuance of the test order. Notwithstanding the fact that a manufacturer has submitted the above list, the Administrator may, upon making the determination that evidence exists indicating noncompliance at other than the manufacturer's preferred plant, order selection at such other plant where vehicles of the configuration specified in the test order are assembled.

(e) [Reserved]. For guidance see § 86.603–88.

(f) In the event evidence exists indicating an engine family is in noncompliance, the Administrator may, in addition to other powers provided by this section, issue a test order specifying the engine family the manufacturer is required to test.

[59 FR 16300, Apr. 6, 1994, as amended at 62 FR 31234, June 6, 1997]

§ 86.604–84 Testing by the Administrator.

(a) The Administrator may require by test order that vehicles of a specified configuration be selected in a manner consistent with the requirements of § 86.607 and submitted to him at such place as he may designate for the purpose of conducting emission tests. These tests shall be conducted in accordance with § 86.608 of these regulations to determine whether vehicles manufactured by the manufacturer conform with the regulations with respect to which the certificate of conformity was issued.

(b)(1) Whenever the Administrator conducts a test on a test vehicle or the Administrator and manufacturer each conduct a test on the same test vehicle, the results of the Administrator's test shall comprise the official data for that vehicle.

(2) Whenever the manufacturer conducts all tests on a test vehicle, the manufacturer's test data will be accepted as the official data: *Provided*, That if the Administrator makes a determination based on testing under paragraph (a) of this section that there is a substantial lack of agreement between the manufacturer's test results and the Administrator's test results, no manufacturer's test data from the

manufacturer's test facility will be accepted for purposes of this subpart.

(c) In the event that testing conducted under paragraph (a) of this section demonstrates a lack of agreement under paragraph (b)(2), of this section, the Administrator will:

(1) Notify the manufacturer in writing of his determination that the test facility is inappropriate for conducting the tests required by this subpart and the reasons therefor, and

(2) Reinstate any manufacturer's data upon a showing by the manufacturer that the data acquired under paragraph (a) of this section was erroneous and the manufacturer's data was correct.

(d) The manufacturer may request in writing that the Administrator reconsider his determination in paragraph (b)(2) of this section based on data or information which indicates that changes have been made to the test facility and such changes have resolved the reasons for disqualification.

[41 FR 31483, July 28, 1976, as amended at 49 FR 48481, Dec. 12, 1984. Redesignated at 54 FR 2123, Jan. 19, 1989]

§ 86.605–88 Maintenance of records; submittal of information.

(a) The manufacturer of any new motor vehicle subject to any of the standards or procedures prescribed in this part shall establish, maintain and retain the following adequately organized and indexed records:

(1) *General records.* (i) A description of all equipment used to test vehicles in accordance with § 86.608 pursuant to a test order issued under this subpart, including the following information:

(A) Dynamometer.

(*1*) Inertia loading.

(*2*) Road load power absorption at 50 m.p.h.

(*3*) Manufacturer, model and serial number.

(B) Constant Volume Sampler.

(*1*) Pressure of the mixture of exhaust and dilution air entering the positive displacement pump, pressure increase across the pump, and the temperature set point of the temperature control system.

(*2*) Number of revolutions of the positive displacement pump accumulated while test is in progress and exhaust samples are being collected.

(*3*) Humidity of dilution air.

(*4*) Manufacturer, model, type and serial number.

(C) Instrumentation.

(*1*) Manufacturer, model and serial number for each analyzer.

(*2*) Pertinent information such as tuning, gain, ranges and calibration data.

(*3*) Identification of zero, span, exhaust gas and dilution air sample traces.

(*4*) Temperature set point of heated sample line and heated hydrocarbon detector temperature control system (for diesel vehicles only).

(D) Test cell.

(*1*) Barometric pressure, ambient temperature and humidity.

(*2*) Data and time of day.

(ii) In lieu of recording test equipment information, reference to a vehicle test cell number may be used, with the advance approval of the Administrator: Provided, the test cell records show the pertinent information.

(2) *Individual records.* These records pertain to each audit conducted pursuant to this subpart.

(i) The location where audit testing was performed, and the date and time for each emissions test.

(ii) The number of miles on the test vehicle when the test began and ended.

(iii) The names of supervisory personnel responsible for the conduct of the audit.

(iv) A record and description of any repairs performed prior to and/or subsequent to approval by the Administrator, giving the date and time of the repair, the reason for it, the person authorizing it, and the names of supervisory personnel responsible for the repair.

(v) The dates when the test vehicles were shipped from the assembly plant or the storage facility and when they were received at the testing facility.

(vi) The drive wheel tire pressure and the inertia weight class for each test vehicle, and the actual curb weight for each test vehicle required to be weighed pursuant to a test order.

(vii) A complete record of all emission tests performed pursuant to this subpart (except tests performed by

EPA directly) including all individual worksheets and/or other documentation relating to each test, or exact copies thereof.

(viii) A brief description of all significant audit events, commencing with the test vehicle selection process, but not described by any other subparagraph under paragraph (a)(2) of this section, including such extraordinary events as vehicle accident.

(ix) A paper copy of the driver's trace for each test.

(3) Additional required records for diesel vehicles.

(4) The manufacturer shall record test equipment description, pursuant to paragraph (a)(1) of this section, for each test cell that is used to perform emission testing under this subpart.

(b) All records required to be maintained under this subpart shall be retained by the manufacturer for a period of one (1) year after completion of all testing in response to a test order. Records may be retained as hard copy or reduced to microfilm, punch cards, etc., depending upon the record retention procedures of the manufacturer: *Provided,* That in every case all the information contained in the hard copy shall be retained.

(c) The manufacturer shall, pursuant to a request made by the Administrator, submit to the Administrator the following information with regard to vehicle production:

(1) Number of vehicles, by configuration and assembly plant, scheduled for production for the time period designated in the request.

(2) Number of vehicles, by configuration and assembly plant, produced during the time period designated in the request which are complete for introduction into commerce.

(d) Nothing in this section shall limit the Administrator's discretion to require the manufacturer to retain additional records or submit information not specifically required by this section.

(e) All reports, submissions, notifications and requests for approvals made under this subpart shall be addressed to:

Director, Manufacturers Operations Division EN–340), U.S. Environmental Protection Agency, 1200 Pennsylvania Ave., NW., Washington, DC 20460.

[41 FR 31483, July 28, 1976, as amended at 44 FR 61962, Oct. 29, 1979; 49 FR 48481, Dec. 12, 1984. Redesignated at 54 FR 2123, Jan. 19, 1989]

§ 86.605–98 Maintenance of records; submittal of information.

Section 86.605–98 includes text that specifies requirements that differ from § 86.605–88. Where a paragraph in § 86.605–88 is identical and applicable to § 86.605–98, this may be indicated by specifying the corresponding paragraph and the statement ''[Reserved]. For guidance see § 86.605–88.'' Where a corresponding paragraph of § 86.605–88 is not applicable, this is indicated by the statement ''[Reserved].''.

(a) through (a)(1)(i)(D) [Reserved]. For guidance see § 86.605–88.

(E) Refueling Enclosure (Refueling SHED).

(*1*) Total internal volume.

(*2*) Capacity of mixing blower.

(*3*) Location of refueling access ports.

(*4*) Enclosure barometric pressure and ambient temperature.

(*5*) Soak area temperature records.

(F) Fuel Dispenser for Refueling.

(*1*) Fuel dispensing rate.

(*2*) Manufacturer and model of fuel nozzle.

(*3*) Dispensed fuel temperature.

(*4*) Dispensed fuel volume.

(a)(1)(ii) through (e) [Reserved]. For guidance see § 86.605–88.

(2) [Reserved]

[59 FR 16301, Apr. 6, 1994]

§ 86.606–84 Entry and access.

(a) In order to allow the Administrator to determine whether a manufacturer is complying with the provisions of this subpart and a test order issued thereunder, EPA Enforcement Officers may enter during normal operating hours upon presentation of credentials any of the following:

(1) Any facility where any vehicle to be introduced into commerce or any emission-related component is or has been manufactured, assembled, or stored;

(2) Any facility where any tests conducted pursuant to a test order or any procedures or activities connected with such tests are or were performed;

(3) Any facility where any vehicle which is being, was, or is to be tested is present; and

(4) Any facility where any record or other document relating to any of the above is located.

(b) Upon admission to any facility referred to in paragraph (a) of this section, EPA Enforcement Officers may:

(1) Inspect and monitor any part or aspect of vehicle manufacturer, assembly, storage, testing and other procedures, and the facilities in which these procedures are conducted;

(2) Inspect and monitor any part or aspect of vehicle test procedures or activities, including, but not limited to, vehicle selection, preparation, mileage accumulation, preconditioning, emission tests, and maintenance; and verify calibration of test equipment;

(3) Inspect and make copies of any records or documents related to the assembly, storage, selection and testing of a vehicle in compliance with a test order; and

(4) Inspect and photograph any part or aspect of any vehicle and any component used in its assembly that is reasonably related to the purpose of the entry.

(c) EPA Enforcement Officers may obtain reasonable assistance without cost from those in charge of a facility to help them perform any function listed in this subpart and may request the recipient of a test order to arrange with those in charge of a facility operated for its benefit to furnish reasonable assistance without cost to EPA whether or not the recipient controls the facility.

(d) EPA Enforcement Officers may seek a warrant or court order authorizing the EPA Enforcement Officers to conduct activities related to entry and access as authorized in this section. EPA Enforcement Officers may proceed *ex parte* to obtain a warrant whether or not the Enforcement Officers first sought permission from the recipient of the test order or the party in charge of the facilities in question to conduct those activities related to entry and access.

(e) A recipient of a test order shall permit EPA Enforcement Officers who present a warrant or court order as described in paragraph (d) of this section to conduct activities related to entry and access as authorized in this section and as described in the warrant or court order. A recipient of a test order shall cause those in charge of its facility or a facility operated for its benefit to permit EPA Enforcement Officers to conduct these activities related to entry and access pursuant to a warrant or court order whether or not the recipient controls the facility. In the absence of such a warrant or court order, EPA Enforcement Officers may conduct those activities related to entry and access only upon the consent of either the recipient of the test order or the party in charge of the facilities in question.

(f) It is not a violation of this part or the Clean Air Act for any person to refuse to permit EPA Enforcement Officers to conduct activities related to entry and access as authorized in this section without a warrant or court order.

(g) A manufacturer is responsible for locating its foreign testing and manufacturing facilities in jurisdictions in which local foreign law does not prohibit EPA Enforcement Officers from conducting the entry and access activities specified in this section. EPA will not attempt to make any inspections which it has been informed that local foreign law prohibits.

(h) For purposes of this section:

(1) *Presentation of Credentials* means display of the document designating a person as an EPA Enforcement Officer.

(2) Where vehicle storage areas or facilities are concerned, *operating hours* means all times during which personnel other than custodial personnel are at work in the vicinity of the area or facility and have access to it.

(3) Where facilities or areas other than those covered by paragraph (h)(2) of this section are concerned, *operating hours* means all times during which an assembly line is in operation, vehicle assembly is occurring, or testing, repair, mileage accumulation, production or compilation of records, or any other procedure or activity related to testing, or to vehicle manufacture or assembly, is being conducted in a facility.

(4) *Reasonable assistance* includes, but is not limited to, providing clerical,

copying, interpreting and translating services and, at the request of an EPA Enforcement Officer, making available personnel of the facility being inspected during their working hours to provide information relevant to the Enforcement Officer's activities authorized in this section. Any employee whom a manufacturer has instructed to appear at the request of an Enforcement Officer may be accompanied, represented, and advised by counsel.

[41 FR 31483, July 28, 1976, as amended at 49 FR 48481, Dec. 12, 1984. Redesignated at 54 FR 2123, Jan. 19, 1989]

§ 86.607–84 Sample selection.

(a) Vehicles comprising a test sample which are required to be tested, pursuant to a test order issued in accordance with this subpart, will be selected at the location and in the manner specified in the test order. If a manufacturer determines that the test vehicles cannot be selected in the manner specified in the test order, an alternative selection procedure may be employed: *Provided*, That the manufacturer requests approval of the alternative procedure in advance of the start of test sample selection and that the Administrator approves the procedure. Special order vehicles are exempt from sample selection unless a test sample cannot be completed otherwise.

(b) The manufacturer shall have assembled the test vehicles of the configuration selected for testing using its normal mass production processes for vehicles to be distributed into commerce. During the audit, the manufacturer shall inform the Administrator of any change(s) implemented in its production processes, including quality control, which may be reasonably expected to affect the emissions of the vehicles selected, between the time the manufacturer received the test order and the time the manufacturer finished selecting test vehicles.

(c) No quality control, testing, or assembly procedures will be used on the completed test vehicles or any portion thereof, including parts and subassemblies, that has not been or will not be used during the production and assembly of all other vehicles of that configuration.

(d) The test order may specify that EPA Enforcement Officers, rather than the manufacturer, will select the test vehicles according to the method described in paragraph (a) of this section.

(e) The order in which test vehicles are selected determines the order in which test results are to be used in applying the sampling plan in accordance with § 86.610.

(f) The manufacturer shall keep on hand all untested vehicles, if any, comprising the test sample until a pass or fail decision is reached in accordance with paragraph (d) of § 86.610. The manufacturer may ship any tested vehicle which has not failed in accordance with paragraph (a) of § 86.610. However, once a manufacturer ships any vehicle from the test sample, it relinquishes the prerogative to conduct retests provided in paragraph (i) of § 86.608.

[49 FR 48482, Dec. 12, 1984. Redesignated at 54 FR 2123, Jan. 19, 1989]

§ 86.608–88 Test procedures.

(a) The prescribed test procedures are contained in subpart B of this part 86. For purposes of Selective Enforcement Audit testing, the manufacturer shall not perform any of the test procedures in subpart B of this part relating to evaporative emission testing, except as specified in paragraph (a)(2) of this section.

(1) The Administrator may, on the basis of a written application by a manufacturer, prescribe test procedures other than those in subpart B of this part for any motor vehicle which he determines is not susceptible to satisfactory testing using the procedures in subpart B of this part.

(2) The following exceptions to the test procedures in subpart B of this part are applicable to Selective Enforcement Audit testing:

(i) The manufacturer may use test fuel meeting the specifications of paragraph (a)(1) or (b)(2) of § 86.113–82 for mileage accumulation. Otherwise, the manufacturer may use fuels other than those specified in this section only with advance approval of the Administrator.

(ii) The manufacturer may measure the temperature of the test fuel at other than the approximate mid-volume of the fuel tank, as specified in

§ 86.131(a), and may drain the test fuel from other than the lowest point of the tank, as specified in § 86.131(b), provided an equivalent method is used. Equivalency documentation shall be maintained by the manufacturer and shall be made available to the Administrator upon request.

(iii) The manufacturer may perform additional preconditioning on SEA test vehicles other than the preconditioning specified in § 86.132 only if the additional preconditioning had been performed on certification test vehicles of the same configuration.

(iv) The manufacturer shall perform the heat build procedure 11 to 34 hours following vehicle preconditioning rather than according to the time period specified in paragraph § 86.133(a). All references in § 86.133 to an evaporative emission enclosure (SHED) and analyzing for HC during the heat build can be ignored.

(v) The manufacturer may substitute slave tires for the drive wheel tires on the vehicle as specified in paragraph § 86.135(e): *Provided*, That the slave tires are the same size.

(vi) The cold start exhaust emission test described in § 86.137 shall follow the heat build procedure described in § 86.133 by not more than one hour.

(vii) In performing exhaust sample analysis under § 86.140.

(A) When testing diesel vehicles, the manufacturer shall allow a minimum of 20 minutes warm-up for the HC analyzer, and a minimum of 2 hours warm-up for the CO, CO_2 and NO_X analyzers. (Power is normally left on infrared and chemiluminescent analyzers. When not in use, the chopper motors of the infrared analyzers are turned off and the phototube high voltage supply to the chemiluminescent analyzers is placed in the standby position.)

(B) The manufacturer shall exercise care to prevent moisture from condensing in the sample collection bags.

(viii) The manufacturer need not comply with § 86.142, since the records required therein are provided under other provisions of subpart G of this part.

(ix) In addition to the requirements of subpart B of this part, the manufacturer shall prepare gasoline-fueled vehicles as follows prior to exhaust emission testing:

(A) The manufacturer shall inspect the fuel system to insure the absence of any leaks of liquid or vapor to the atmosphere by applying a pressure of 14.5±0.5 inches of water to the fuel system, allowing the pressure to stabilize, and isolating the fuel system from the pressure source. Following isolation of the fuel system, pressure must not drop more than 2.0 inches of water in 5 minutes. If required, the manufacturer shall perform corrective action in accordance with paragraph § 86.608(d) and report this action in accordance with paragraph § 86.609(d).

(B) When performing this pressure check, the manufacturer shall exercise care to neither purge nor load the evaporative emission control system.

(C) The manufacturer shall not modify the test vehicle's evaporative emission control system by component addition, deletion, or substitution, except to comply with paragraph (a)(2)(ii) of this section if approved in advance by the Administrator.

(b)(1) The manufacturer shall not adjust, repair, prepare, or modify the vehicles selected for testing and shall not perform any emission tests on vehicles selected for testing pursuant to the test order unless this adjustment, repair, preparation, modification, and/or tests are documented in the manufacturer's vehicle assembly and inspection procedures and are actually performed or unless these adjustments and/or tests are required or permitted under this subpart or are approved in advance by the Administrator.

(2) For 1981 and later model years the Administrator may adjust or cause to be adjusted any engine or vehicle parameter which the Administrator has determined to be subject to adjustment for new vehicle compliance testing (e.g., for certification *or* Selective Enforcement Audit testing) in accordance with § 86.081–22(c)(1), to any setting within the physically adjustable range of that parameter, as determined by the Administrator in accordance with § 86.081–22(e)(3)(ii), prior to the performance of any tests. However, if the idle speed parameter is one which the Administrator has determined to be subject to adjustment, the Administrator

shall not adjust it to a setting which causes a lower engine idle speed than will be possible within the physically adjustable range of the idle speed parameter on the vehicle when it has accumulated 4,000 miles, all other parameters being adjusted identically for the purpose of comparison. The Administrator, in making or specifying such adjustments, will consider the effect of the deviation from the manufacturer's recommended setting on emissions performance characteristics as well as the likelihood that similar settings will occur on in-use light-duty vehicles or light-duty trucks. In determining likelihood, the Administrator will consider factors such as, but not limited to, the effect of the adjustment on vehicle performance characteristics and surveillance information from similar in-use vehicles.

(c) Prior to performing exhaust emission testing on an SEA test vehicle, the manufacturer may accumulate on each vehicle a number of miles equal to the greater of 4,000 miles, or the number of miles the manufacturer accumulated during certification on the emission-data vehicle corresponding to the configuration specified in the test order.

(1) Mileage accumulation must be performed in any manner using good engineering judgment to obtain emission results representative of normal production vehicles. This mileage accumulation must be consistent with the new vehicle break-in instructions contained in the applicable vehicle owner's manual, if any.

(2) The manufacturer shall accumulate mileage at a minimum rate of 300 miles per vehicle during each 24 hour period, unless otherwise provided by the Administrator.

(i) The first 24 hour period for mileage accumulation shall begin as soon as authorized vehicle checks, inspections and preparations are completed on each vehicle.

(ii) The minimum mileage accumulation rate does not apply on weekends or holidays.

(iii) If the manufacturer's mileage accumulation target is less than the minimum rate specified (300 miles per day), then the minimum daily accumulation rate shall be equal to the manufacturer's mileage accumulation target.

(3) Mileage accumulation shall be completed on a sufficient number of test vehicles during consecutive 24 hour periods to assure that the number of vehicles tested per day fulfills the requirements of paragraph (g) of this section.

(d) The manufacturer shall not perform any maintenance on test vehicles after selection for testing nor shall the Administrator allow deletion of any test vehicle from the test sequence, unless requested by the manufacturer and approved by the Administrator before any test vehicle maintenance or deletion.

(e) The manufacturer will be allowed 24 hours to ship test vehicles from the assembly plant or storage facility to the test facility if the test facility is not located at the plant or storage facility or in close proximity to the plant or storage facility: Except, That the Administrator may approve more time based upon a request by the manufacturer accompanied by a satisfactory justification.

(f) If a vehicle cannot complete the mileage accumulation or emission tests because of vehicle malfunction, the manufacturer may request the Administrator to authorize the repair of that vehicle or its deletion from the test sequence.

(g) Whenever the manufacturer conducts testing pursuant to a test order issued under this subpart, the manufacturer shall notify the Administrator within one working day of receipt of the test order, which test facility will be used to comply with the test order and the number of available test cells at that facility. If no test cells are available at the desired facility, the manufacturer must provide alternate testing capability satisfactory to the Administrator. The manufacturer shall complete emission testing on a minimum of four vehicles per 24 hour period including voided tests for each available test cell at his testing facility: Except, That the Administrator may approve a longer period based upon a request by the manufacturer accompanied by satisfactory justification.

(h) The manufacturer shall perform test vehicle selection, preparation, mileage accumulation, shipping, and testing in such a manner as to assure that the audit is performed in an expeditious manner.

(i) The manufacturer may retest any test vehicle after a fail decision has been reached in accordance with paragraph (d) of § 86.610 based on the first test on each vehicle; *except,* that the Administrator may approve retesting at other times during the audit based upon a request by the manufacturer accompanied by a satisfactory justification. The manufacturer may test each vehicle a total of three times. The manufacturer shall test each vehicle the same number of times. The manufacturer may accumulate additional mileage on test vehicles before conducting retests, subject to the provisions of paragraph (c) of this section.

[41 FR 31483, July 28, 1976, as amended at 43 FR 4552, Feb. 2, 1978; 44 FR 2975, Jan. 12, 1979; 45 FR 14524, Mar. 5, 1980; 47 FR 49813, Nov. 2, 1982; 49 FR 48482, Dec. 12, 1984. Redesignated and amended at 54 FR 2123, Jan. 19, 1989]

§ 86.608–90 Test procedures.

(a) The prescribed test procedures are contained in subpart B and/or subpart C of this part 86. For purposes of Selective Enforcement Audit testing, the manufacturer shall not perform any of the test procedures in subpart B of this part relating to evaporative emission testing, except as specified in paragraph (a)(2) of this section.

(1) The Administrator may, on the basis of a written application by a manufacturer, prescribe test procedures other than those in subpart B and/or subpart C of this part for any motor vehicle which he determines is not susceptible to satisfactory testing using the procedures in subpart B and/or subpart C of this part. The Administrator may, based on advance application by a manufacturer, approve optional test procedures for use in Selective Enforcement Audit testing.

(2) The following exceptions to the test procedures in subpart B of this part are applicable to Selective Enforcement Audit testing:

(i) For mileage accumulation, the manufacturer may use test fuel meeting the specifications of mileage and service accumulation fuels of § 86.113. Otherwise, the manufacturer may use fuels other than those specified in this section only with the advance approval of the Administrator.

(ii) The manufacturer may measure the temperature of the test fuel at other than the approximate mid-volume of the fuel tank, as specified in § 86.131–96(a) with only a single temperature sensor, and may drain the test fuel from other than the lowest point of the tank, as specified in § 86.131–96(b), provided an equivalent method is used. Equivalency documentation shall be maintained by the manufacturers and shall be made available to the Administrator upon request. Additionally, for any test vehicle that has remained under laboratory ambient temperature conditions for at least 6 hours prior to testing, the vehicle soak described in § 86.132–96(c) may be eliminated upon approval of the Administrator. In such cases, the vehicle shall be operated through the preconditioning drive described in § 86.132–96(c) immediately following the fuel drain and fill procedure described in § 86.132–96(b).

(iii) The manufacturer may perform additional preconditioning on SEA test vehicles other than the preconditioning specified in § 86.132 only if the additional preconditioning had been performed on certification test vehicles of the same configuration.

(iv) If the Administrator elects to use the evaporative canister preconditioning procedure described in § 86.132–96(k), the manufacturer shall perform the heat build procedure 11 to 34 hours following vehicle preconditioning rather than according to the time period specified in § 86.133–90(a). All references in § 86.133–90 to an evaporative emission enclosure (SHED) and analyzing for HC during the heat build can be ignored.

(v) The manufacturer may substitute slave tires for the drive wheel tires on the vehicle as specified in paragraph § 86.135–90(e): Provided, that the slave tires are the same size.

(vi) If the Administrator elects to use the evaporative canister preconditioning procedure described in § 86.132–96(k), the cold start exhaust emission test described in § 86.137 shall follow

the heat build procedure described in § 86.133–90 by not more than one hour.

(vii) In performing exhaust sample analysis under § 86.140.

(A) When testing diesel vehicles, or methanol-fueled Otto-cycle vehicles, the manufacturer shall allow a minimum of 20 minutes warm-up for the HC analyzer, and for diesel vehicles, a minimum of two hours warm-up for the CO, CO_2. and NO_X analyzers. (Power is normally left on infrared and chemiluminescent analyzers. When not in use, the chopper motors of the infrared analyzers are turned off and the phototube high voltage supply to the chemiluminescent analyzers is placed in the standby position.)

(B) The manufacturer shall exercise care to prevent moisture from condensing in the sample collection bags.

(viii) The manufacturer need not comply with § 86.142, since the records required therein are provided under other provisions of subpart G of this part.

(ix) In addition to the requirements of subpart B of this part, the manufacturer shall prepare gasoline-fueled and methanol-fueled vehicles as follows prior to exhaust emissions testing:

(A) The manufacturer shall inspect the fuel system to insure the absence of any leaks of liquid or vapor to the atmosphere by applying a pressure of 14.5±0.5 inches of water to the fuel system, allowing the pressure to stabilize, and isolating the fuel system from the pressure source, pressure must not drop more than 2.0 inches of water in 5 minutes. If required, the manufacturer shall perform corrective action in accordance with § 86.608 and report this action in accordance with § 86.609.

(B) When performing this pressure check, the manufacturer shall exercise care to neither purge nor load the evaporative emission control system.

(C) The manufacturer shall not modify the test vehicle's evaporative emission control system by component addition, deletion, or substitution, except to comply with paragraph (a)(2)(ii) of this section if approved in advance by the Administrator.

(3) The following exceptions to the test procedures in subpart C of this part are applicable to Selective Enforcement Audit testing:

(i) The manufacturer may measure the temperature of the test fuel at other than the approximate mid-volume of the fuel tank, as specified in § 86.231(a), and may drain the test fuel from other than the lowest point of the fuel tank as specified in § 86.231(b), provided an equivalent method is used. Equivalency documentation shall be maintained by the manufacturer and shall be made available to the Administrator upon request.

(ii) In performing exhaust sample analysis under § 86.240, the manufacturer shall exercise care to prevent moisture from condensing in the sample collection bags.

(iii) The manufacturer need not comply with § 86.242 since the records required therein are provided under other provisions of subpart G of this part.

(iv) In addition to the requirements of subpart C of this part, the manufacturer shall prepare gasoline-fueled vehicles as follows prior to exhaust emission testing:

(A) The manufacturer shall inspect the fuel system to ensure the absence of any leaks of liquid or vapor to the atmosphere by applying a pressure of 14.5±0.5 inches of water (3.6±0.1 kPa) to the fuel system allowing the pressure to stabilize and isolating the fuel system from the pressure source. Following isolation of the fuel system, pressure must not drop more than 2.0 inches of water (0.5 kPa) in five minutes. If required, the manufacturer shall perform corrective action in accordance with paragraph § 86.608(d) and report this action in accordance with paragraph § 86.609(d).

(B) When performing this pressure check, the manufacturer shall exercise care to neither purge nor load the evaporative emission control system.

(C) The manufacturer shall not modify the test vehicle's evaporative emission control system by component addition, deletion, or substitution, except if approved in advance by the Administrator, to comply with paragraph (a)(3)(i) of this section.

(b)(1) The manufacturer shall not adjust, repair, prepare, or modify the vehicles selected for testing and shall not perform any emission tests on vehicles selected for testing pursuant to the

test order unless this adjustment, repair, preparation, modification, and/or tests are documented in the manufacturer's vehicle assembly and inspection procedures and are actually performed or unless these adjustments and/or tests are required or permitted under this subpart or are approved in advance by the Administrator.

(2) For 1981 and later model years the Administrator may adjust or cause to be adjusted any engine or vehicle parameter which the Administrator has determined to be subject to adjustment for new vehicle compliance testing (e.g., for certification or Selective Enforcement Audit testing) in accordance with § 86.081–22(c)(1), to any setting within the physically adjustable range of that parameter, as determined by the Administrator in accordance with § 86.081–22(e)(3)(ii), prior to the performance of any tests. However, if the idle speed parameter is one which the Administrator has determined to be subject to adjustment, the Administrator shall not adjust it to a setting which causes a lower engine idle speed than will be possible within the physically adjustable range of the idle speed parameter on the vehicle when it has accumulated 4,000 miles, all other parameters being adjusted identically for the purpose of comparison. The Administrator, in making or specifying such adjustments, will consider the effect of the deviation from the manufacturer's recommended setting on emissions performance characteristics as well as the likelihood that similar settings will occur on in-use light-duty vehicles or light-duty trucks. In determining likelihood, the Administrator will consider factors such as, but not limited to, the effect of the adjustment on vehicle performance characteristics and surveillance information from similar in-use vehicles.

(c) Prior to performing exhaust emission testing on an SEA test vehicle, the manufacturer may accumulate on each vehicle a number of miles equal to the greater of 4,000 miles, or the number of miles the manufacturer accumulated during certification on the emission-data vehicle corresponding to the configuration specified in the test order.

(1) Mileage accumulation must be performed in any manner using good engineering judgement to obtain emission results representative of normal production vehicles. This mileage accumulation must be consistent with the new vehicle break-in instructions contained in the applicable vehicle owner's manual, if any.

(2) The manufacturer shall accumulate mileage at a minimum rate of 300 miles per vehicle during each 24 hour period, unless otherwise provided by the Administrator.

(i) The first 24 hour period for mileage accumulation shall begin as soon as authorized vehicle checks, inspections and preparations are completed on each vehicle.

(ii) The minimum mileage accumulation rate does not apply on weekends or holidays.

(iii) If the manufacturer's mileage accumulation target is less than the minimum rate specified (300 miles per day), then the minimum daily accumulation rate shall be equal to the manufacturer's mileage accumulation target.

(3) Mileage accumulation shall be completed on a sufficient number of test vehicles during consecutive 24 hour periods to assure that the number of vehicles tested per day fulfills the requirements of paragraph (g) of this section.

(d) The manufacturer shall not perform any maintenance on test vehicles after selection for testing nor shall the Administrator allow deletion of any test vehicle from the test sequence, unless requested by the manufacturer and approved by the Administrator before any test vehicle maintenance or deletion.

(e) The manufacturer will be allowed 24 hours to ship test vehicles from the assembly plant or storage facility to the test facility if the test facility is not located at the plant or storage facility or in close proximity to the plant or storage facility: Except, That the Administrator may approve more time based upon a request by the manufacturer accompanied by a satisfactory justification.

(f) If a vehicle cannot complete the mileage accumulation or emission tests because of vehicle malfunction,

the manufacturer may request the Administrator to authorize the repair of that vehicle or its deletion from the test sequence.

(g) Whenever the manufacturer conducts testing pursuant to a test order issued under this subpart, the manufacturer shall notify the Administrator within one working day of receipt of the test order, which test facility will be used to comply with the test cells at that facility. If no test cells are available at the desired facility, the manufacturer must provide alternate testing capability satisfactory to the Administrator. The manufacturer shall complete emission testing on a minimum of four vehicles per 24 hour period including voided tests for each available test cell at his testing facility: Except, That the Administrator may approve a longer period based upon a request by the manufacturer accompanied by satisfactory justification.

(h) The manufacturer shall perform test vehicle selection, preparation, mileage accumulation, shipping, and testing in such a manner as to assure that the audit is performed in an expeditious manner.

(i) The manufacturer may retest any test vehicle after a fail decision has been reached in accordance with paragraph (d) of § 86.610 based on the first test on each vehicle; except, that the Administrator may approve retesting at other times during the audit based upon a request by the manufacturer accompanied by a satisfactory justification. The manufacturer may test each vehicle the same number of times. The manufacturer may accumulate additional mileage on test vehicles before conducting retests, subject to the provisions of paragraph (c) of this section.

[54 FR 14557, Apr. 11, 1989, as amended at 57 FR 31921, July 17, 1992; 58 FR 16045, Mar. 24, 1993; 60 FR 43898, Aug. 23, 1995]

§ 86.608–96 Test procedures.

Section 86.608–96 includes text that specifies requirements that differ from § 86.608–90. Where a paragraph in § 86.608–90 is identical and applicable to § 86.608–96, this is indicated by specifying the corresponding paragraph and the statement ''[Reserved]. For guidance see § 86.608–90.'' Where a corresponding paragraph of § 86.608–90 is not applicable, this is indicated by the statement ''[Reserved].''

(a) The prescribed test procedures are the FTP as described in subpart B of this part, the cold temperature CO test procedure as described in subpart C of this part, and the CST as described in subpart O of this part, as applicable. For purposes of Selective Enforcement Audit testing, the manufacturer may not perform any of the test procedures in subpart B of this part relating to evaporative emission testing, except as specified in § 86.608–90(a)(2).

(1) The Administrator may select and prescribe the sequence of any CSTs. Further, the Administrator may, on the basis of a written application by a manufacturer, approve optional test procedures other than those in subparts B, C, and O of this part for any motor vehicle which is not subject to satisfactory testing using the procedures in subparts B, C, and O of this part.

(2) through (3) [Reserved]. For guidance see § 86.608–90.

(4) The exceptions to the test procedures described in subpart O of this part that are listed in paragraphs (a)(4)(i) and (ii) of this section are applicable to Selective Enforcement Audit testing.

(i) The manufacturer need not comply with § 86.1442, since the records required therein are provided under other provisions of subpart G of this part.

(ii) In addition to the requirements of subpart O of this part, the manufacturer must prepare vehicles as in paragraphs (a)(4)(ii) (A) through (C) of this section prior to exhaust emission testing.

(A) The manufacturer must inspect the fuel system to insure the absence of any leaks of liquid or vapor to the atmosphere by applying a pressure of 14.5 ±0.5 inches of water to the fuel system, allowing the pressure to stabilize, and isolating the fuel system from the pressure source. Pressure must not drop more than 2.0 inches of water in five minutes. If required, the manufacturer performs corrective action in accordance with this section and must report this action in accordance with § 86.609.

(B) When performing this pressure check, the manufacturer must exercise

care to neither purge nor load the evaporative system.

(C) The manufacturer may not modify the test vehicle's evaporative emission control system by component addition, deletion, or substitution.

(b) through (i) [Reserved]. For guidance see § 86.608–90.

[58 FR 58423, Nov. 1, 1993]

§ 86.608–97 Test procedures.

Section 86.608–97 includes text that specifies requirements that differ from those specified in §§ 86.608–90 and 86.608–96. Where a paragraph in § 86.608–90 or § 86.608–96 is identical and applicable to § 86.608–97, this may be indicated by specifying the corresponding paragraph and the statement ''[Reserved]. For guidance see § 86.608–90.'' or ''[Reserved]. For guidance see § 86.608–96.''

(a) The prescribed test procedures are the Federal Test Procedure, as described in subpart B and/or subpart R of this part, whichever is applicable, the cold temperature CO test procedure as described in subpart C of this part, and the Certification Short Test procedure as described in subpart O of this part. Where the manufacturer conducts testing based on the requirements specified in Chapter 1 or Chapter 2 of the California Regulatory Requirements Applicable to the National Low Emission Vehicle Program (October, 1996), the prescribed test procedures are the procedures cited in the previous sentence, or substantially similar procedures, as determined by the Administrator. The California Regulatory Requirements Applicable to the National Low Emission Vehicle Program are incorporated by reference (see § 86.1). For purposes of Selective Enforcement Audit testing, the manufacturer shall not be required to perform any of the test procedures in subpart B of this part relating to evaporative emission testing, except as specified in paragraph (a)(2) of this section.

(1) [Reserved]. For guidance see § 86.608–96.

(2) The following exceptions to the test procedures in subpart B and/or subpart R of this part are applicable to Selective Enforcement Audit testing:

(i) For mileage accumulation, the manufacturer may use test fuel meeting the specifications for mileage and service accumulation fuels of § 86.113, or, for vehicles certified to the National LEV standards, the specifications of § 86.1771. Otherwise, the manufacturer may use fuels other than those specified in this section only with the advance approval of the Administrator.

(ii) [Reserved]. For guidance see § 86.608–90.

(iii) The manufacturer may perform additional preconditioning on Selective Enforcement Audit test vehicles other than the preconditioning specified in § 86.132, or § 86.1773 for vehicles certified to the National LEV standards, only if the additional preconditioning had been performed on certification test vehicles of the same configuration.

(a)(2)(iv) through (a)(2)(vii) [Reserved]. For guidance see § 86.608–90.

(a)(2)(viii) The manufacturer need not comply with § 86.142, or § 86.1775, since the records required therein are provided under other provisions of this subpart G.

(a)(2)(ix) through (a)(3) [Reserved]. For guidance see § 86.608–90.

(a)(4) [Reserved]. For guidance see § 86.608–96.

(b) through (i) [Reserved]. For guidance see § 86.608–90.

[62 FR 31234, June 6, 1997]

§ 86.608–98 Test procedures.

(a) The prescribed test procedures are the Federal Test Procedure, as described in subpart B and/or subpart R of this part, whichever is applicable, the cold temperature CO test procedure as described in subpart C of this part, and the Certification Short Test procedure as described in subpart O of this part. Where the manufacturer conducts testing based on the requirements specified in Chapter 1 or Chapter 2 of the California Regulatory Requirements Applicable to the National Low Emission Vehicle Program (October, 1996), the prescribed test procedures are the procedures cited in the previous sentence, or substantially similar procedures, as determined by the Administrator. The California Regulatory Requirements Applicable to the National Low Emission Vehicle Program are incorporated by reference (see § 86.1). For purposes of Selective Enforcement Audit testing, the manufacturer shall not be required to perform any of the

test procedures in subpart B of this part relating to evaporative emission testing, other than refueling emissions testing, except as specified in paragraph (a)(2) of this section.

(1) The Administrator may omit any of the testing procedures described in paragraph (a) of this section and may select and prescribe the sequence of any CSTs. Further, the Administrator may, on the basis of a written application by a manufacturer, approve optional test procedures other than those in subparts B, C, and O of this part for any motor vehicle which is not susceptible to satisfactory testing using the procedures in subparts B, C, and O of this part.

(2) The following exceptions to the test procedures in subpart B and/or subpart R of this part are applicable to Selective Enforcement Audit testing:

(i) For mileage accumulation, the manufacturer may use test fuel meeting the specifications for mileage and service accumulation fuels of § 86.113, or, for vehicles certified to the National LEV standards, the specifications of § 86.1771. Otherwise, the manufacturer may use fuels other than those specified in this section only with the advance approval of the Administrator.

(ii) The manufacturer may measure the temperature of the test fuel at other than the approximate mid-volume of the fuel tank, as specified in § 86.131–96(a) with only a single temperature sensor, and may drain the test fuel from other than the lowest point of the tank, as specified in § 86.131–96(b) and § 86.152–98(a), provided an equivalent method is used. Equivalency documentation shall be maintained by the manufacturers and shall be made available to the Administrator upon request. Additionally, for any test vehicle that has remained under laboratory ambient temperature conditions for at least 6 hours prior to testing, the vehicle soak described in § 86.132–96(c) may be eliminated upon approval of the Administrator. In such cases, the vehicle shall be operated through the preconditioning drive described in § 86.132–96(c) immediately following the fuel drain and fill procedure described in § 86.132–96(b).

(iii) The manufacturer may perform additional preconditioning on Selective Enforcement Audit test vehicles other than the preconditioning specified in § 86.132, or § 86.1773, for vehicles certified to the National LEV standards only if the additional preconditioning was performed on certification test vehicles of the same configuration.

(iv) If the Administrator elects to use the evaporative/refueling canister preconditioning procedure described in § 86.132–96(k), the manufacturer shall perform the heat build procedure 11 to 34 hours following vehicle preconditioning rather than according to the time period specified in § 86.133–90(a). All references to an evaporative emission enclosure and analyzing for HC during the heat build can be ignored.

(v) The manufacturer may substitute slave tires for the drive wheel tires on the vehicle as specified in paragraph § 86.135–90(e): *Provided*, that the slave tires are the same size.

(vi) If the Administrator elects to use the evaporative/refueling canister preconditioning procedure described in § 86.132–96(k), the cold start exhaust emission test described in § 86.137–96 shall follow the heat build procedure described in § 86.133–90 by not more than one hour.

(vii) In performing exhaust sample analysis under § 86.140–94.

(A) When testing diesel vehicles, or methanol-fueled Otto-cycle vehicles, the manufacturer shall allow a minimum of 20 minutes warm-up for the HC analyzer, and for diesel vehicles, a minimum of two hours warm-up for the CO, CO_2. and NO_X analyzers. (Power is normally left on infrared and chemiluminescent analyzers. When not in use, the chopper motors of the infrared analyzers are turned off and the phototube high voltage supply to the chemiluminescent analyzers is placed in the standby position.)

(B) The manufacturer shall exercise care to prevent moisture from condensing in the sample collection bags.

(viii) The manufacturer need not comply with § 86.142, § 86.155, or § 86.1775, since the records required therein are provided under other provisions of this subpart G.

(ix) If a manufacturer elects to perform the background determination procedure described in paragraph (a)(2)(xi) of this section in addition to

performing the refueling emissions test procedure, the elapsed time between the initial and final FID readings shall be recorded, rounded to the nearest second rather than minute as described in § 86.154–98(e)(8). In addition, the vehicle soak described in § 86.153–98(e) shall be conducted with the windows and luggage compartment of the vehicle open.

(x) The Administrator may elect to perform a seal test, described in § 86.153–98(b), of both integrated and non-integrated systems instead of the full refueling test. When testing non-integrated systems, a manufacturer may conduct the canister purge described in § 86.153–98(b)(1) directly following the preconditioning drive described in § 86.132–96(e) or directly following the exhaust emissions test described in § 86.137–96.

(xi) In addition to the refueling test, a manufacturer may elect to perform the following background emissions determination immediately prior to the refueling measurement procedure described in § 86.154–98, provided EPA is notified of this decision prior to the start of testing in an SEA.

(A) The SHED shall be purged for several minutes immediately prior to the background determination. Warning: If at any time the concentration of hydrocarbons, of methanol, or of methanol and hydrocarbons exceeds 15,000 ppm C, the enclosure should be immediately purged. This concentration provides a 4:1 safety factor against the lean flammability limit.

(B) The FID (or HFID) hydrocarbon analyzer shall be zeroed and spanned immediately prior to the background determination. If not already on, the enclosure mixing fan and the spilled fuel mixing blower shall be turned on at this time.

(C) Place the vehicle in the SHED. The ambient temperature level encountered by the test vehicle during the entire background emissions determination shall be 80 °F ±3 °F. The windows and luggage compartment of the vehicle must be open and the gas cap must be secured.

(D) Seal the SHED. Immediately analyze the ambient concentration of hydrocarbons in the SHED and record. This is the initial background hydrocarbon concentration.

(E) Soak the vehicle for ten minutes ±1 minute.

(F) The FID (or HFID) hydrocarbon analyzer shall be zeroed and spanned immediately prior to the end of the background determination.

(G) Analyze the ambient concentration of hydrocarbons in the SHED and record. This is the final background hydrocarbon concentration.

(H) The total hydrocarbon mass emitted during the background determination is calculated according to § 86.156–98. To obtain a per-minute background emission rate, divide the total hydrocarbon mass calculated in this paragraph by the duration of the soak, rounded to the nearest second, described in paragraph (a)(2)(xi)(G) of this section.

(I) The background emission rate is multiplied by the duration of the refueling measurement obtained in paragraph (a)(2)(ix) of this section. This number is then subtracted from the total grams of emissions calculated for the refueling test according to § 86.156–98(a) to obtain the adjusted value for total refueling emissions. The final results for comparison with the refueling emission standard shall be computed by dividing the adjusted value for total refueling mass emissions by the total gallons of fuel dispensed in the refueling test as described in § 86.156–98(b).

(xii) In addition to the requirements of subpart B of this part, the manufacturer shall prepare gasoline-fueled and methanol-fueled vehicles as follows prior to emission testing:

(A) The manufacturer shall inspect the fuel system to ensure the absence of any leaks of liquid or vapor to the atmosphere by applying a pressure of 14.5±0.5 inches of water (3.6±0.1 Kpa) to the fuel system allowing the pressure to stabilize and isolating the fuel system from the pressure source. Following isolation of the fuel system, pressure must not drop more than 2.0 inches of water (0.5 Kpa) in five minutes. If required, the manufacturer shall perform corrective action in accordance with paragraph (d) of this section and report this action in accordance with § 86.609–98(d).

(B) When performing this pressure check, the manufacturer shall exercise care to neither purge nor load the evaporative or refueling emission control systems.

(C) The manufacturer may not modify the test vehicle's evaporative or refueling emission control systems by component addition, deletion, or substitution, except to comply with paragraph (a)(2)(ii) of this section if approved in advance by the Administrator.

(3) The following exceptions to the test procedures in subpart C of this part are applicable to Selective Enforcement Audit testing:

(i) The manufacturer may measure the temperature of the test fuel at other than the approximate mid-volume of the fuel tank, as specified in § 86.131–90(a), and may drain the test fuel from other than the lowest point of the fuel tank as specified in § 86.131–90(b), provided an equivalent method is used. Equivalency documentation shall be maintained by the manufacturer and shall be made available to the Administrator upon request.

(ii) In performing exhaust sample analysis under § 86.140–94, the manufacturer shall exercise care to prevent moisture from condensing in the sample collection bags.

(iii) The manufacturer need not comply with § 86.142–90 since the records required therein are provided under other provisions of this subpart G.

(iv) In addition to the requirements of subpart C of this part, the manufacturer shall prepare gasoline-fueled vehicles as follows prior to exhaust emission testing:

(A) The manufacturer shall inspect the fuel system to ensure the absence of any leaks of liquid or vapor to the atmosphere by applying a pressure of 14.5±0.5 inches of water (3.6±0.1 Kpa) to the fuel system allowing the pressure to stabilize and isolating the fuel system from the pressure source. Following isolation of the fuel system, pressure must not drop more than 2.0 inches of water (0.5 Kpa) in five minutes. If required, the manufacturer shall perform corrective action in accordance with paragraph (d) of this section and report this action in accordance with § 86.609–98(d).

(B) When performing this pressure check, the manufacturer shall exercise care to neither purge nor load the evaporative or refueling emission control system.

(C) The manufacturer shall not modify the test vehicle's evaporative or refueling emission control system by component addition, deletion, or substitution, except if approved in advance by the Administrator, to comply with paragraph (a)(3)(i) of this section.

(4) The exceptions to the test procedures in subpart O of this part applicable to Selective Enforcement Audit testing are listed in paragraphs (a)(4)(i) and (ii) of this section.

(i) The manufacturer need not comply with § 86.1442, since the records required therein are provided under provisions of this subpart G.

(ii) In addition to the requirements of subpart O of this part, the manufacturer must prepare vehicles as in paragraphs (a)(4)(ii) (A) through (C) of this section prior to exhaust emission testing.

(A) The manufacturer must inspect the fuel system to insure the absence of any leaks of liquid or vapor to the atmosphere by applying a pressure of 14.5±0.5 inches of water (3.6±0.1 Kpa) to the fuel system, allowing the pressure to stabilize, and isolating the fuel system from the pressure source. Pressure must not drop more than 2.0 inches of water (0.5 Kpa) in five minutes. If required, the manufacturer performs corrective action in accordance with paragraph (d) of this section and must report this action in accordance with § 86.609–98(d).

(B) When performing this pressure check, the manufacturer must exercise care to neither purge nor load the evaporative or refueling emission control system.

(C) The manufacturer may not modify the test vehicle's evaporative or refueling emission control system by component addition, deletion, or substitution.

(b)(1) The manufacturer shall not adjust, repair, prepare, or modify the vehicles selected for testing and shall not perform any emission tests on vehicles selected for testing pursuant to the test order unless this adjustment repair, preparation, modification, and/or

tests are documented in the manufacturer's vehicle assembly and inspection procedures and are actually performed or unless these adjustments and/or tests are required or permitted under this subpart or are approved in advance by the Administrator.

(2) For 1981 and later model years the Administrator may adjust or cause to be adjusted any engine or vehicle parameter which the Administrator has determined to be subject to adjustment for new vehicle compliance testing (e.g., for certification or Selective Enforcement Audit testing) in accordance with § 86.081–22(c)(1), to any setting within the physically adjustable range of that parameter, as determined by the Administrator in accordance with § 86.081–22(e)(3)(ii), prior to the performance of any tests. However, if the idle speed parameter is one which the Administrator has determined to be subject to adjustment, the Administrator shall not adjust it to a setting which causes a lower engine idle speed than will be possible within the physically adjustable range of the idle speed parameter on the vehicle when it has accumulated 4,000 miles, all other parameters being adjusted identically for the purpose of comparison. The Administrator, in making or specifying such adjustments, will consider the effect of the deviation from the manufacturer's recommended setting on emissions performance characteristics as well as the likelihood that similar settings will occur on in-use light-duty vehicles or light-duty trucks. In determining likelihood, the Administrator will consider factors such as, but not limited to, the effect of the adjustment on vehicle performance characteristics and surveillance information from similar in-use vehicles.

(c) Prior to performing emission testing pursuant to paragraph (a) of this section on an SEA test vehicle, the manufacturer may accumulate on each vehicle a number of miles equal to the greater of 4,000 miles, or the number of miles the manufacturer accumulated during certification on the emission-data vehicle corresponding to the configuration specified in the test order.

(1) Mileage accumulation must be performed in any manner using good engineering judgment to obtain emission results representative of normal production vehicles. This mileage accumulation must be consistent with the new vehicle break-in instructions contained in the applicable vehicle owner's manual, if any.

(2) The manufacturer shall accumulate mileage at a minimum rate of 300 miles per vehicle during each 24-hour period, unless otherwise provided by the Administrator.

(i) The first 24-hour period for mileage accumulation shall begin as soon as authorized vehicle checks, inspections and preparations are completed on each vehicle.

(ii) The minimum mileage accumulation rate does not apply on weekends or holidays.

(iii) If the manufacturer's mileage accumulation target is less than the minimum rate specified (300 miles per day), then the minimum daily accumulation rate shall be equal to the manufacturer's mileage accumulation target.

(3) Mileage accumulation shall be completed on a sufficient number of test vehicles during consecutive 24-hour periods to assure that the number of vehicles tested per day fulfills the requirements of paragraph (g) of this section.

(d) The manufacturer shall not perform any maintenance on test vehicles after selection for testing nor shall the Administrator allow deletion of any test vehicle from the test sequence, unless requested by the manufacturer and approved by the Administrator before any test vehicle maintenance of deletion.

(e) The manufacturer will be allowed 24 hours to ship test vehicles from the assembly plant or storage facility to the test facility if the test facility is not located at the plant or storage facility or in close proximity to the plant or storage facility: Except, that the Administrator may approve more time based upon a request by the manufacturer accompanied by a satisfactory justification.

(f) If a vehicle cannot complete the mileage accumulation or emission tests because of vehicle malfunction, the manufacturer may request the Administrator to authorize the repair of

that vehicle or its deletion from the test sequence.

(g) Whenever the manufacturer conducts testing pursuant to a test order issued under this subpart, the manufacturer shall notify the Administrator within one working day of receipt of the test order, which test facility will be used to comply with the test order and the number of available test cells at that facility. If no test cells are available at the desired facility, the manufacturer must provide alternate testing capability satisfactory to the Administrator.

(1) The manufacturer shall perform a combination of tests pursuant to paragraph (a) of this section so that a minimum of four tests are performed per 24 hour period, including voided tests, for each available test cell.

(2) The Administrator may approve a longer period based upon a request by a manufacturer accompanied by satisfactory justification.

(h) The manufacturer shall perform test vehicle selection, preparation, mileage accumulation, shipping, and testing in such a manner as to assure that the audit is performed in an expeditious manner.

(i) The manufacturer may retest any test vehicle after a fail decision has been reached in accordance with § 86.610–98(d) based on the first test on each vehicle; except that the Administrator may approve retests at other times during the audit based upon a request by the manufacturer accompanied by a satisfactory justification. The manufacturer may test each vehicle a total of three times. The manufacturer shall test each vehicle the same number of times. The manufacturer may accumulate additional mileage on test vehicles before conducting retests, subject to the provisions of paragraph (c) of this section.

[59 FR 16301, Apr. 6, 1994, as amended at 60 FR 43898, Aug. 23, 1995; 62 FR 31235, June 6, 1997]

§ 86.609–84 Calculation and reporting of test results.

(a) Initial test results are calculated following the Federal Test Procedure specified in § 86.608(a). Round the initial test results to the number of decimal places contained in the applicable emission standard, expressed to one additional significant figure. Rounding shall be done in accordance with ASTM E 29–90, Standard Practice for Using Significant Digits in Test Data to Determine Conformance with Specifications. This procedure has been incorporated by reference (see § 86.1).

(b) Final test results for each test vehicle shall be calculated by summing the initial test results derived in paragraph (a) of this section for each test vehicle, dividing by the number of tests conducted on the vehicle, and rounding to the same number of decimal places contained in the applicable emission standard expressed to one additional significant figure. Rounding shall be done in accordance with ASTM E 29–90, Standard Practice for Using Significant Digits in Test Data to Determine Conformance with Specifications. This procedure has been incorporated by reference (see § 86.1).

(c)(1) The final deteriorated test results for each test vehicle shall be calculated by multiplying the final test results by the appropriate deterioration factor derived for the certification process for the engine family and model year to which the selected configuration belongs, and rounded to two significant figures. Rounding shall be done in accordance with ASTM E 29–90, Standard Practice for Using Significant Digits in Test Data to Determine Conformance with Specifications. This procedure has been incorporated by reference (see § 86.1). For the purposes of this paragraph, if a deterioration factor as computed during the certification process is less than one, that deterioration factor shall be one.

(2) There are no deterioration factors for light-duty vehicles tested in accordance with § 86.146–96 of subpart B of this part. Accordingly, for the fuel dispensing spitback test the term ''final deteriorated test results'' shall mean the final test results derived in paragraph (b) of this section for each test vehicle, rounded to the same number of significant figures contained in the applicable standard in accordance with ASTM E 29–90, Standard Practice for Using Significant Digits in Test Data to Determine Conformance with Specifications. This procedure has been incorporated by reference (see § 86.1).

(d) Within five working days after completion of testing of all vehicles pursuant to a test order, the manufacturer shall submit to the Administrator a report which includes the following information:

(1) The location and description of the manufacturer's exhaust emission test facilities which were utilized to conduct testing reported pursuant to this section;

(2) The applicable standards against which the vehicles were tested;

(3) Deterioration factors for the selected configuration.

(4) A description of the vehicle selection method used;

(5) For each test conducted,

(i) Test vehicle description including:

(A) Configuration and engine family identification.

(B) Year, make, build date, and model of vehicle.

(C) Vehicle Identification Number.

(D) Miles accumulated on vehicle.

(ii) Location where mileage accumulation was conducted and description of accumulation schedule.

(iii) Test number, date, initial test results, final results and final deteriorated test results for all valid and invalid exhaust emission tests, and the reason for invalidation.

(iv) A complete description of any modification, repair, preparation, maintenance and/or testing which was performed on the test vehicle and (A) has not been reported pursuant to any other paragraph of this subpart and (B) will not be performed on all other production vehicles.

(v) Carbon dioxide emission values for all valid and invalid exhaust emission tests;

(vi) Where a vehicle was deleted from the test sequence by authorization of the Administrator, the reason for the deletion;

(vii) Any other information the Administrator may request relevant to the determination as to whether the new motor vehicles being manufactured by the manufacturer do in fact conform with the regulations with respect to which the certificate of conformity was issued.

(6) The following statement and endorsement:

This report is submitted pursuant to sections 206 and 208 of the Clean Air Act. This Selective Enforcement Audit was conducted in complete conformance with all applicable regulations under 40 CFR part 86 et seq. and the conditions of the test order. No emission related change(s) to production processes or quality control procedures for the vehicle configuration tested have been made between receipt of this test order and conclusion of the audit. All data and information reported herein is, to the best of

_____

(Company Name)

knowledge, true and accurate. I am aware of the penalties associated with violations of the Clean Air Act and the regulations thereunder.

_____

(Authorized Company Representative)

[41 FR 31483, July 28, 1976, as amended at 43 FR 4552, Feb. 2, 1978; 49 FR 48483, Dec. 12, 1984. Redesignated at 54 FR 2123, Jan. 19, 1989, and amended at 58 FR 16045, Mar. 24, 1993]

§ 86.609–96 Calculation and reporting of test results.

Section 86.609–96 includes text that specifies requirements that differ from § 86.609–84. Where a paragraph in § 86.609–84 is identical and applicable to § 86.609–96, this is indicated by specifying the corresponding paragraph and the statement ''[Reserved]. For guidance see § 86.609–84.'' Where a corresponding paragraph of § 86.609–84 is not applicable, this is indicated by the statement ''[Reserved].''

(a) Initial test results are calculated following the test procedures specified in § 86.608(a). Round the initial test results to the number of decimal places contained in the applicable emission standard expressed to one additional significant figure. Rounding is done in accordance with ASTM E 29–90, Standard Practice for Using Significant Digits in Test Data to Determine Conformance with Specifications. This procedure has been incorporated by reference (see § 86.1).

(b) Final test results for each test vehicle are calculated by summing the initial test results within a specific FTP, CST, or Cold Temperature CO Test Procedure derived in paragraph (a) of this section for each test vehicle, dividing by the number of times that

specific FTP, CST, or Cold Temperature CO Test Procedure has been conducted on the vehicle, and rounding to the same number of decimal places contained in the applicable emission standard expressed to one additional significant figure. Rounding is done in accordance with ASTM E 29–90, Standard Practice for Using Significant Digits in Test Data to Determine Conformance with Specifications. This procedure has been incorporated by reference (see § 86.1).

(c) *Final deteriorated test results*—(1) *For each test vehicle.* The final deteriorated test results for each test vehicle are calculated by multiplying the final test results by the appropriate deterioration factor derived from the certification process for the engine family and model year to which the selected configuration belongs and rounding to the same number of decimal places contained in the applicable emission standard. Rounding is done in accordance with ASTM E 29–90, Standard Practice for Using Significant Digits in Test Data to Determine Conformance with Specifications. This procedure has been incorporated by reference (see § 86.1). For the purpose of this paragraph, if a deterioration factor as computed during the certification process is less than one, that deterioration factor is one.

(2) *Exceptions.* (i) There are no deterioration factors for light-duty vehicle emissions obtained during testing in accordance with subpart O of this part. Accordingly, for the CST the term ''final deteriorated test results'' means the final test results derived in paragraph (b) of this section for each test vehicle, rounded to the same number of decimal places contained in the applicable emission standard. Rounding is done in accordance with ASTM E 29–90, Standard Practice for Using Significant Digits in Test Data to Determine Conformance with Specifications. This procedure has been incorporated by reference (see § 86.1).

(ii) There are no deterioration factors for light-duty vehicles tested in accordance with § 86.146–96. Accordingly, for the fuel dispensing spitback test the term ''final deteriorated test results'' means the final test results derived in paragraph (b) of this section for each test vehicle, rounded to the same number of significant figures contained in the applicable standard in accordance with ASTM E 29–90, Standard Practice for Using Significant Digits in Test Data to Determine Conformance with Specifications. This procedure has been incorporated by reference (see § 86.1).

(d) [Reserved]. For guidance see § 86.609–84.

[58 FR 58423, Nov. 1, 1993]

§ 86.609–97 Calculation and reporting of test results.

Section 86.609–97 includes text that specifies requirements that differ from those specified in §§ 86.609–84 and 86.609–96. Where a paragraph in § 86.609–84 or § 86.609–96 is identical and applicable to § 86.609–97, this may be indicated by specifying the corresponding paragraph and the statement ''[Reserved]. For guidance see § 86.609–84.'' or ''[Reserved]. For guidance see § 86.609–96.''

(a) through (b) [Reserved]. For guidance see § 86.609–96.

(c) *Final deteriorated test results*—(1) *For each test vehicle.* The final deteriorated test results for each test vehicle tested according to subpart B, subpart C, or subpart R of this part are calculated by first multiplying or adding, as appropriate, the final test results by or to the appropriate deterioration factor derived from the certification process for the engine or evaporative/refueling family and model year to which the selected configuration belongs, and then by multiplying by the appropriate reactivity adjustment factor, if applicable, and rounding to the same number of decimal places contained in the applicable emission standard. Rounding is done in accordance with the Rounding-Off Method specified in ASTM E29–90, Standard Practice for Using Significant Digits in Test Data to Determine Conformance with Specifications. This procedure is incorporated by reference (see § 86.1). For the purpose of this paragraph (c), if a multiplicative deterioration factor as computed during the certification process is less than one, that deterioration factor is one. If an additive deterioration factor as computed during the certification process is less than zero, that deterioration factor will be zero.

(c)(2) [Reserved]. For guidance see § 86.609–96.

(d) [Reserved]. For guidance see § 86.609–84.

[62 FR 31235, June 6, 1997]

§ 86.609–98 Calculation and reporting of test results.

(a) Initial test results are calculated following the test procedures specified in § 86.608–98(a). Round the initial test results to the number of decimal places contained in the applicable emission standard expressed to one additional significant figure. Rounding is done in accordance with ASTM E 29–67, (reapproved 1980) (as referenced in § 86.094–28 (a)(4)(i)(B)(*2*)(*ii*).

(b) Final test results for each test vehicle are calculated by summing the initial test results derived in paragraph (a) of this section for each test vehicle, dividing by the number of times that specific test has been conducted on the vehicle, and rounding to the same number of decimal places contained in the applicable standard expressed to one additional significant figure. Rounding is done in accordance with ASTM E 29–67, (reapproved 1980) (as referenced in § 86.094–28 (a)(4)(i)(B)(*2*)(*ii*).

(c) *Final deteriorated test results*—(1) *For each test vehicle.* The final deteriorated test results for each light-duty vehicle tested for exhaust emissions and/or refueling emissions according to subpart B, subpart C, or subpart R of this part are calculated by first multiplying or adding, as appropriate, the final test results by or to the appropriate deterioration factor derived from the certification process for the engine or evaporative/refueling family and model year to which the selected configuration belongs, and then by multiplying by the appropriate reactivity adjustment factor, if applicable, and rounding to the same number of decimal places contained in the applicable emission standard. Rounding is done in accordance with the Rounding-Off Method specified in ASTM E29–90, Standard Practice for Using Significant Digits in Test Data to Determine Conformance with Specifications. This procedure has been incorporated by reference (see § 86.1). For the purpose of this paragraph (c), if a multiplicative deterioration factor as computed during the certification process is less than one, that deterioration factor is one. If an additive deterioration factor as computed during the certification process is less than zero, that deterioration factor will be zero.

(2) *Exceptions.* There are no deterioration factors for light-duty vehicle emissions obtained during testing in accordance with subpart O of this part or with § 86.146–96. Accordingly, for the CST and the fuel dispensing spitback test the term ''final deteriorated test results'' means the final test results derived in paragraph (b) of this section for each test vehicle, rounded to the same number of decimal places contained in the applicable emission standard. Rounding is done in accordance with ASTM E 29–67, (reapproved 1980) (as referenced in § 86.094–28 (a)(4)(i)(B)(*2*)(*ii*).

(d) Within five working days after completion of testing of all vehicles pursuant to a test order, the manufacturer shall submit to the Administrator a report which includes the following information:

(1) The location and description of the manufacturer's emission test facilities which were utilized to conduct testing reported pursuant to this section.

(2) The applicable standards against which the vehicles were tested.

(3) Deterioration factors for the selected configuration.

(4) A description of the vehicle selection method used.

(5) For each test conducted.

(i) Test vehicle description including:

(A) Configuration, engine family, and refueling family identification.

(B) Year, make, build date, and model of vehicle.

(C) Vehicle Identification Number.

(D) Miles accumulated on vehicle.

(ii) Location where mileage accumulation was conducted and description of accumulation schedule.

(iii) Test number, date initial test results, final results and final deteriorated test results for all valid and invalid exhaust emission tests, and the reason for invalidation.

(iv) A complete description of any modification, repair, preparation, maintenance and/or testing which was performed on the test vehicle and:

(A) Has not been reported pursuant to any other paragraph of this subpart; and

(B) Will not be performed on all other production vehicles.

(v) Carbon dioxide emission values for all valid and invalid exhaust emission tests.

(vi) Where a vehicle was deleted from the test sequence by authorization of the Administrator, the reason for the deletion.

(vii) Any other information the Administrator may request relevant to the determination as to whether the new motor vehicles being manufactured by the manufacturer do in fact conform with the regulations with respect to which the certificate of conformity was issued.

(6) The following statement and endorsement:

This report is submitted pursuant to sections 206 and 208 of the Clean Air Act. This Selective Enforcement Audit was conducted in complete conformance with all applicable regulations under 40 CFR part 86 and the conditions of the test order. No emission related change(s) to production processes or quality control procedures for the vehicle configuration tested have been made between receipt of this test order and conclusion of the audit. All data and information reported herein is, to the best of

(Company Name)

knowledge, true and accurate. I am aware of the penalties associated with violations of the Clean Air Act and the regulations thereunder.

(Authorized Company Representative)

[59 FR 16303, Apr. 6, 1994, as amended at 62 FR 31236, June 6, 1997]

§ 86.610–96 Compliance with acceptable quality level and passing and failing criteria for Selective Enforcement Audits.

(a) The prescribed acceptable quality level is 40 percent.

(b) A failed vehicle is one whose final deteriorated test results pursuant to § 86.609–96(c), for one or more of the applicable pollutants, including fuel spitback, exceed the applicable emission standard. For the CST as described in subpart O of this part, a vehicle fail determination is made if the final deteriorated test results for HC and/or CO emissions from any CST exceed the applicable emission standard.

(c) *Pass/fail criteria*—(1) *FTP criteria*. The manufacturer must test vehicles comprising the test sample until a pass decision is reached for all pollutants, or a fail decision is reached for one pollutant. A pass decision is reached when the cumulative number of failed vehicles, as defined in paragraph (b) of this section, for each pollutant is less than or equal to the fail decision number appropriate to the cumulative number of vehicles tested. A fail decision is reached when the cumulative number of failed vehicles for one pollutant is greater than or equal to the fail decision number appropriate to the cumulative number of vehicles tested. The pass and fail decision numbers associated with the cumulative number of vehicles tested are determined by use of the tables in appendix XI to this part appropriate for the annual projected sales as made by the manufacturer in its report submitted under § 600.207–80(a)(2) of this chapter (Automobile Fuel Economy Regulations). In the tables in appendix XI to this part, sampling plan ''stage'' refers to the cumulative number of vehicles tested. Once a pass decision has been made for a particular pollutant, the number of vehicles whose final deteriorated test results exceed the emission standard for that pollutant may not be considered any further for purposes of the audit.

(2) *CST criteria*. A pass/fail decision is based on the CST in its entirety rather than on a per pollutant basis. The manufacturer must test vehicles comprising the test sample until a pass or fail decision is reached based on CST testing. A pass decision is reached when the cumulative number of failed vehicles, as defined in paragraph (b) of this section, based on CST testing is less than or equal to the pass decision number appropriate to the cumulative number of vehicles tested. A fail decision is reached when the cumulative number of failed vehicles based on CST testing is greater than or equal to the fail decision number appropriate to the cumulative number of vehicles tested. The pass and fail decision numbers associated with the cumulative number of vehicles tested are determined by use of the tables in appendix XI to this

part appropriate for the annual projected sales as made by the manufacturer in its report submitted under § 600.207–80(a)(2) of this chapter (Automobile Fuel Economy Regulations). In the tables in appendix XI to this part, sampling plan ''stage'' refers to the cumulative number of vehicles tested. Once a pass decision has been made based on CST testing, the number of vehicles whose final deteriorated test results exceed any of the emission standards for any CST may not be considered any further for purposes of the audit.

(d) Passing or failing of an SEA occurs when the decision is made on the last vehicle required to make a decision under paragraph (c) of this section.

(e) The Administrator may terminate testing earlier than required in paragraph (c) of this section.

[58 FR 58424, Nov. 1, 1993]

§ 86.610–98 Compliance with acceptable quality level and passing and failing criteria for Selective Enforcement Audits.

(a) The prescribed acceptable quality level is 40 percent.

(b) A failed vehicle is one whose final deteriorated test results pursuant to § 86.609–98(c) exceed at least one of the applicable emission standards associated with the test procedures pursuant to § 86.608–98(a).

(c)(1) *Pass/fail criteria.* The manufacturer shall test vehicles comprising the test sample until a pass decision is reached for all of the pollutants associated with all of the test procedures pursuant to § 86.608–98(a) or a fail decision is reached for one of these pollutants. A pass decision is reached when the cumulative number of failed vehicles, as defined in paragraph (b) of this section, for each pollutant is less than or equal to the fail decision number appropriate to the cumulative number of vehicles tested. A fail decision is reached when the cumulative number of failed vehicles for one pollutant is greater than or equal to the fail decision number appropriate to the cumulative number of vehicles tested. The pass and fail decision numbers associated with the cumulative number of vehicles tested are determined by use of the tables in appendix XI of this part appropriate for the annual projected sales as made by the manufacturer in its report submitted under § 600.207–80(a)(2) of this chapter (Automobile Fuel Economy Regulations). In the tables in appendix XI of this part, sampling plan ''stage'' refers to the cumulative number of vehicles tested. Once a pass decision has been made for a particular pollutant associated with a particular test procedure pursuant to § 86.608–98(a), the number of vehicles whose final deteriorated test results exceed the emission standard for that pollutant may not be considered any further for purposes of the audit.

(2) CST criteria only. For CST testing pursuant to subpart O, a pass or fail decision is determined according to the pass/fail criteria described in paragraph (c)(1) of this section, except that for each vehicle, the CST in its entirety is considered one pollutant.

(d) Passing or failing of an SEA audit occurs when the decision is made on the last vehicle required to make a decision under paragraph (c) of this section.

(e) The Administrator may terminate testing earlier than required in paragraph (c) of this section.

[59 FR 16304, Apr. 6, 1994]

§ 86.612–84 Suspension and revocation of certificates of conformity.

(a) The certificate of conformity is suspended with respect to any vehicle failing pursuant to paragraph (b) of § 86.610 effective from the time that testing of that vehicle is completed.

(b) The Administrator may suspend the certificate of conformity for a configuration which does not pass a Selective Enforcement Audit pursuant to paragraph § 86.610(c) based on the first test, or all tests, conducted on each vehicle. This suspension will not occur before ten days after failure to pass the audit.

(c) If the results of vehicle testing pursuant to these regulations indicate the vehicles of a particular configuration produced at more than one plant do not conform to the regulations with respect to which the certificate of conformity was issued, the Administrator

may suspend the certificate of conformity with respect to that configuration for vehicles manufactured by the manufacturer in other plants of the manufacturer.

(d) The Administrator will notify the manufacturer in writing of any suspension or revocation of a certificate of conformity in whole or in part: Except, That the certificate of conformity is immediately suspended with respect to any vehicle failing pursuant to § 86.610(a) and as provided for in paragraph (a) of this section.

(e) The Administrator may revoke a certificate of conformity for a configuration when the certificate has been suspended pursuant to paragraph (b) or (c) of this section if the proposed remedy for the nonconformity, as reported by the manufacturer to the Administrator, is one requiring a design change(s) to the engine and/or emission control system as described in the Application for Certification of the affected configuration.

(f) Once a certificate has been suspended for a failed vehicle as provided for in paragraph (a) of this section, the manufacturer must take the following actions:

(1) Before the certificate is reinstated for that failed vehicle,

(i) Remedy the nonconformity, and

(ii) Demonstrate that the vehicle's final deteriorated test results conform to the applicable emission standards or family particulate emission limits, as defined in part 86 by retesting the vehicle in accordance with these regulations.

(2) Submit a written report to the Administrator within thirty days after successful completion of testing on the failed vehicle, which contains a description of the remedy and test results for the vehicle in addition to other information that may be required by this regulation.

(g) Once a certificate has been suspended pursuant to paragraph (b) or (c) of this section, the manufacturer must take the following actions before the Administrator will consider reinstating such certificate:

(1) Submit a written report to the Administrator which identifies the reason for the noncompliance of the vehicles, describes the proposed remedy, including a description of any proposed quality control and/or quality assurance measures to be taken by the manufacturer to prevent the future occurrence of the problem, and states the date on which the remedies will be implemented, and

(2) Demonstrate that the vehicle configuration for which the certificate of conformity has been suspended does in fact comply with these regulations by testing vehicles selected from normal production runs of that vehicle configuration, at the plant(s) or the facilities specified by the Administrator, in accordance with the conditions specified in the initial test order; *except*, that if the Administrator has not revoked the certificate pursuant to paragraph (e) of this section and if the manufacturer elects to continue testing individual vehicles after suspension of a certificate, the certificate is reinstated for any vehicle actually determined to have its final deteriorated test results in conformance with the applicable standards through testing in accordance with the applicable test procedures.

(h) Once a certificate for a failed configuration has been revoked under paragraph (e) of this section and the manufacturer desires to introduce into commerce a modified version of that configuration, the following actions will be taken before the Administrator may issue a certificate for the new configuration:

(1) If the Administrator determines that the proposed change(s) in vehicle design may have an effect on emission performance deterioration and/or fuel economy, he shall notify the manufacturer within 5 working days after receipt of the report in paragraph (g) of this section whether subsequent testing under this subpart will be sufficient to evaluate the proposed change(s) or whether additional testing will be required; and

(2) After implementing the change(s) intended to remedy the nonconformity, the manufacturer shall demonstrate that the modified vehicle configuration does in fact conform with these regulations by testing vehicles selected from normal production runs of that modified vehicle configuration in accordance with the conditions specified in

the initial test order. The Administrator shall consider this testing to satisfy the testing requirements of § 86.079–32 or § 86.079–33 if the Administrator had so notified the manufacturer. If the subsequent testing results in passing of the audit, the Administrator shall reissue or amend the certificate, if necessary, to include that configuration: *Provided*, That the manufacturer has satisfied the testing requirements specified in paragraph (h)(1) of this section. If the subsequent audit is failed, the revocation remains in effect. Any design change approvals under this subpart are limited to the modification of the configuration specified by the test order.

(i) A manufacturer may at any time subsequent to an initial suspension of a certificate of conformity with respect to a test vehicle pursuant to paragraph (a) of this section, but not later than fifteen (15) days or such other period as may be allowed by the Administrator after notification of the Administrator's decision to suspend or revoke a certificate of conformity in whole or in part pursuant to paragraph (b), (c) or (e) of this section, request that the Administrator grant such manufacturer a hearing as to whether the tests have been properly conducted or any sampling methods have been properly applied.

(j) After the Administrator suspends or revokes a certificate of conformity pursuant to this section or notifies a manufacturer of his intent to suspend, revoke or void a certificate of conformity under paragraph (d) of § 86.084–30, and prior to the commencement of a hearing under § 86.614, if the manufacturer demonstrates to the Administrator's satisfaction that the decision to suspend, revoke or void the certificate was based on erroneous information, the Administrator shall reinstate the certificate.

(k) To permit a manufacturer to avoid storing non-test vehicles when conducting an audit of a configuration subsequent to suspension or revocation of the certificate of conformity for that configuration, resulting from failure of the initial audit of that configuration, he may request that the Administrator conditionally reinstate the certificate for that configuration. The Administrator may reinstate the certificate subject to the condition that the manufacturer consents to recall all vehicles of that configuration produced from the time the certificate is conditionally reinstated if the configuration fails the subsequent audit and to remedy any nonconformity at no expense to the owner.

[41 FR 31483, July 28, 1976, as amended at 43 FR 4553, Feb. 2, 1978; 49 FR 48484, Dec. 12, 1984. Redesignated at 54 FR 2123, Jan. 19, 1989]

§ 86.612–97 Suspension and revocation of certificates of conformity.

(a) The certificate of conformity is immediately suspended with respect to any vehicle failing pursuant to § 86.610(b) effective from the time that testing of that vehicle is completed.

(b)(1) *Selective Enforcement Audits*. The Administrator may suspend the certificate of conformity for a configuration that does not pass a Selective Enforcement Audit pursuant to § 86.610–98(c) based on the first test, or all tests, conducted on each vehicle. This suspension will not occur before ten days after failure to pass the audit.

(2) *California Assembly-Line Quality Audit Testing*. The Administrator may suspend the certificate of conformity for a 50-state family or configuration tested in accordance with procedures prescribed under § 86.608 that the Executive Officer has determined to be in non-compliance with one or more applicable pollutants based on the requirements specified in Chapter 1 or Chapter 2 of the California Regulatory Requirements Applicable to the National Low Emission Vehicle Program (October, 1996), if the results of vehicle testing conducted by the manufacturer do not meet the acceptable quality level criteria pursuant to § 86.610. The California Regulatory Requirements Applicable to the National Low Emission Vehicle Program (October, 1996) are incorporated by reference (see § 86.1). A vehicle that is tested by the manufacturer pursuant to California Assembly-Line Quality Audit Test Procedures, in accordance with procedures prescribed under § 86.608, and determined to be a failing vehicle will be treated as a failed vehicle described in § 86.610(b), unless the manufacturer can

show that the vehicle would not be considered a failed vehicle using the test procedures specified in § 86.608. This suspension will not occur before ten days after the manufacturer receives written notification that the Administrator has determined the 50-state family or configuration exceeds one or more applicable federal standards.

(c)(1) *Selective Enforcement Audits.* If the results of vehicle testing pursuant to the requirements of this subpart indicates the vehicles of a particular configuration produced at more than one plant do not conform to the regulations with respect to which the certificate of conformity was issued, the Administrator may suspend the certificate of conformity with respect to that configuration for vehicles manufactured by the manufacturer in other plants of the manufacturer.

(2) *California Assembly-Line Quality Audit Testing.* If the Administrator determines that the results of vehicle testing pursuant to the requirements specified in Chapter 1 or Chapter 2 of the California Regulatory Requirements Applicable to the National Low Emission Vehicle Program (October, 1996) and the procedures prescribed in § 86.608 indicate the vehicles of a particular 50-state engine family or configuration produced at more than one plant do not conform to applicable federal regulations with respect to which a certificate of conformity was issued, the Administrator may suspend, pursuant to paragraph (b)(2) of this section, the certificate of conformity with respect to that engine family or configuration for vehicles manufactured in other plants of the manufacturer. The California Regulatory Requirements Applicable to the National Low Emission Vehicle Program (October, 1996) are incorporated by reference (see § 86.1).

(d) The Administrator will notify the manufacturer in writing of any suspension or revocation of a certificate of conformity in whole or in part: Except, that the certificate of conformity is immediately suspended with respect to any vehicle failing pursuant to § 86.610(b) and as provided for in paragraph (a) of this section.

(e)(1) *Selective Enforcement Audits.* The Administrator may revoke a certificate of conformity for a configuration when the certificate has been suspended pursuant to paragraph (b)(1) or (c)(1) of this section if the proposed remedy for the nonconformity, as reported by the manufacturer to the Administrator, is one requiring a design change(s) to the engine and/or emission control system as described in the Application for Certification of the affected configuration.

(2) *California Assembly-Line Quality Audit Testing.* The Administrator may revoke a certificate of conformity for an engine family or configuration when the certificate has been suspended pursuant to paragraph (b)(2) or (c)(2) of this section if the proposed remedy for the nonconformity, as reported by the manufacturer to the Executive Officer and/or the Administrator, is one requiring a design change(s) to the engine and/or emission control system as described in the Application for Certification of the affected engine family or configuration.

(f) Once a certificate has been suspended for a failed vehicle as provided for in paragraph (a) of this section, the manufacturer must take the following actions:

(1) Before the certificate is reinstated for that failed vehicle—

(i) Remedy the nonconformity; and

(ii) Demonstrate that the vehicle's final deteriorated test results conform to the applicable emission standards or family particulate emission limits, as defined in this part 86 by retesting the vehicle in accordance with the requirements of this subpart.

(2) Submit a written report to the Administrator within thirty days after successful completion of testing on the failed vehicle, which contains a description of the remedy and test results for the vehicle in addition to other information that may be required by this subpart.

(g) Once a certificate has been suspended pursuant to paragraph (b) or (c) of this section, the manufacturer must take the following actions before the Administrator will consider reinstating such certificate:

(1) Submit a written report to the Administrator which identifies the reason for the noncompliance of the vehicles, describes the proposed remedy, including a description of any proposed quality control and/or quality assurance measures to be taken by the manufacturer to prevent the future occurrence of the problem, and states the date on which the remedies will be implemented.

(2) Demonstrate that the engine family or configuration for which the certificate of conformity has been suspended does in fact comply with the requirements of this subpart by testing vehicles selected from normal production runs of that engine family or configuration at the plant(s) or the facilities specified by the Administrator, in accordance with:

(i) The conditions specified in the initial test order pursuant to §86.603 for a configuration suspended pursuant to paragraph (b)(1) or (c)(1) of this section; or

(ii) The conditions specified in a test order pursuant to §86.603 for an engine family or configuration suspended pursuant to paragraph (b)(2) or (c)(2) of this section.

(3) If the Administrator has not revoked the certificate pursuant to paragraph (e) of this section and if the manufacturer elects to continue testing individual vehicles after suspension of a certificate, the certificate is reinstated for any vehicle actually determined to have its final deteriorated test results in conformance with the applicable standards through testing in accordance with the applicable test procedures.

(4) In cases where the Administrator has suspended a certificate of conformity for a 50-state engine family or configuration pursuant to paragraph (b)(2) or (c)(2) of this section, manufacturers may request in writing that the Administrator reinstate the certificate of an engine family or configuration when, in lieu of the actions described in paragraphs (g) (1) and (2) of this section, the manufacturer has agreed to comply with Chapter 3 of the California Regulatory Requirements Applicable to the National Low Emission Vehicle Program (October, 1996), provided an Executive Order is in place for the engine family or configuration. The California Regulatory Requirements Applicable to the National Low Emission Vehicle Program (October, 1996) are incorporated by reference (see §86.1).

(h) Once a certificate for a failed engine family or configuration has been revoked under paragraph (e) (1) or (2) of this section and the manufacturer desires to introduce into commerce a modified version of that engine family or configuration, the following actions will be taken before the Administrator may issue a certificate for the new engine family or configuration:

(1) If the Administrator determines that the proposed change(s) in vehicle design may have an effect on emission performance deterioration and/or fuel economy, he/she shall notify the manufacturer within five working days after receipt of the report in paragraph (g)(1) of this section or after receipt of information pursuant to paragraph (g)(4) of this section whether subsequent testing under this subpart will be sufficient to evaluate the proposed change(s) or whether additional testing will be required.

(2) After implementing the change(s) intended to remedy the nonconformity, the manufacturer shall demonstrate:

(i) If the certificate was revoked pursuant to paragraph (e)(1) of this section, that the modified vehicle configuration does in fact conform with the requirements of this subpart by testing vehicles selected from normal production runs of that modified vehicle configuration in accordance with the conditions specified in the initial test order pursuant to §86.603. The Administrator shall consider this testing to satisfy the testing requirements of §86.079–32 or §86.079–33 if the Administrator had so notified the manufacturer. If the subsequent testing results in a pass decision pursuant to the criteria in §86.610–96(c), the Administrator shall reissue or amend the certificate, if necessary, to include that configuration: *Provided*, that the manufacturer has satisfied the testing requirements specified in paragraph (h)(1) of this section. If the subsequent audit results in a fail decision pursuant to the criteria in §86.610(c), the revocation remains in effect. Any design change approvals under this subpart are limited to the

modification of the configuration specified by the test order.

(ii) If the certificate was revoked pursuant to paragraph (e)(2) of this section, that the modified engine family or configuration does in fact conform with the requirements of this subpart by testing vehicles selected from normal production runs of that modified engine family or configuration in accordance with the conditions specified in a test order pursuant to § 86.603. The Administrator shall consider this testing to satisfy the testing requirements of § 86.079–32 or § 86.079–33 if the Administrator had so notified the manufacturer. If the subsequent testing results in a pass decision pursuant to § 86.610(c), the Administrator shall reissue or amend the certificate as necessary: *Provided*, That the manufacturer has satisfied the testing requirements specified in paragraph (h)(1) of this section. If the subsequent testing results in a fail decision pursuant to § 86.610(c), the revocation remains in effect. Any design change approvals under this subpart are limited to the modification of engine family or configuration specified by the test order.

(3) In cases where the Administrator has revoked a certificate of conformity for a 50-state engine family or configuration pursuant to paragraph (e)(2) of this section, manufacturers may request in writing that the Administrator reissue the certificate of an engine family or configuration when, in lieu of the actions described in paragraphs (h) (1) and (2) of this section, the manufacturer has complied with Chapter 3 of the California Regulatory Requirements Applicable to the National Low Emission Vehicle Program (October, 1996), provided an Executive Order is in place for the engine family or configuration. The California Regulatory Requirements Applicable to the National Low Emission Vehicle Program (October, 1996) are incorporated by reference (see § 86.1).

(i) A manufacturer may at any time subsequent to an initial suspension of a certificate of conformity with respect to a test vehicle pursuant to paragraph (a) of this section, but not later than fifteen (15) days or such other period as may be allowed by the Administrator after notification of the Administrator's decision to suspend or revoke a certificate of conformity in whole or in part pursuant to paragraph (b), (c) or (e) of this section, request that the Administrator grant such manufacturer a hearing as to whether the tests have been properly conducted or any sampling methods have been properly applied.

(j) After the Administrator suspends or revokes a certificate of conformity pursuant to this section or notifies a manufacturer of his intent to suspend, revoke or void a certificate of conformity under § 86.084–30(d), and prior to the commencement of a hearing under § 86.614, if the manufacturer demonstrates to the Administrator's satisfaction that the decision to suspend, revoke or void the certificate was based on erroneous information, the Administrator shall reinstate the certificate.

(k) To permit a manufacturer to avoid storing non-test vehicles when conducting testing of an engine family or configuration subsequent to suspension or revocation of the certificate of conformity for that engine family or configuration pursuant to paragraph (b), (c), or (e) of this section, the manufacturer may request that the Administrator conditionally reinstate the certificate for that engine family or configuration. The Administrator may reinstate the certificate subject to the condition that the manufacturer consents to recall all vehicles of that engine family or configuration produced from the time the certificate is conditionally reinstated if the engine family or configuration fails the subsequent testing and to remedy any nonconformity at no expense to the owner.

[62 FR 31236, June 6, 1997]

§ 86.614–84 Hearings on suspension, revocation, and voiding of certificates of conformity.

(a) *Applicability*. The procedures prescribed by this section apply whenever a manufacturer requests a hearing under § 86.084–30(d)(6)(i), § 86.084–30(d)(7), or § 86.612(i).

(b) *Definitions*. The following definitions shall be applicable to this section:

(1) *Hearing Clerk* shall mean the Hearing Clerk of the Environmental Protection Agency.

(2) *Manufacturer* refers to a manufacturer contesting a suspension or revocation order directed at the manufacturer.

(3) *Party* shall include the Agency and the manufacturer.

(4) *Presiding Officer* shall mean an Administrative Law Judge appointed pursuant to 5 U.S.C. 3105 (see also 5 CFR part 930 as amended).

(5) *Environmental Appeals Board* shall mean the Board within the Agency described in section 1.25 of this title. The Administrator delegates to the Environmental Appeals Board authority to issue final decisions in appeals filed under this subpart. Appeals directed by the Administrator, rather than to the Environmental Appeals Board, will not be considered. This delegation of authority to the Environmental Appeals Board does not preclude the Environmental Appeals Board from referring an appeal or a motion filed under this subpart to the Administrator for decision when the Environmental Appeals Board, in its discretion, deems it appropriate to do so. When an appeal or motion is referred to the Administrator, all parties shall be so notified and the rules in this part referring to the Environmental Appeals Board shall be interpreted as referring to the Administrator.

(c) *Request for public hearing.* (1) If the manufacturer disagrees with the Administrator's decision to suspend, revoke, or void a certificate or disputes the basis for an automatic suspension under § 86.612(a), it may request a public hearing as described in this section. Requests for such a hearing shall be filed with the Administrator not later than 15 days after the Administrator's notification of his decision to suspend or revoke unless otherwise specified by the Administrator. Two copies of such request shall simultaneously be served upon the Director of the Manufacturers Operations Division and two copies filed with the Hearing Clerk. Failure of the manufacturer to request a hearing within the time provided shall constitute a waiver of his right to such a hearing. Subsequent to the expiration of the period for requesting a hearing as of right, the Administrator may, in his discretion and for good cause shown, grant the manufacturer a hearing to contest the suspension or revocation.

(2) The request for a public hearing shall contain:

(i) A statement as to which vehicle configurations or engine families are to be the subject of the hearing;

(ii) A concise statement of the issues to be raised by the manufacturer at the hearing for each vehicle configuration or engine family or vehicle for which the manufacturer has requested the hearing: *Provided, however,* That in the case of a hearing request under paragraph § 86.612(i), the hearing is restricted to the following issues:

(A) Whether tests were conducted in accordance with applicable regulations under this part;

(B) Whether test equipment was properly calibrated and functioning;

(C) Whether sampling procedures specified in appendix XI of this part were followed; and

(D) Whether there exists a basis for distinguishing vehicles produced at plants other than the one from which vehicles were selected which would invalidate the Administrator's decision under § 86.612(c);

(iii) A statement specifying reasons the manufacturer believes he will prevail on the merits on each of the issues so raised; and

(iv) A summary of the evidence which supports the manufacturer's position on each of the issues so raised.

(3) A copy of all requests for public hearings shall be kept on file in the Office of the Hearing Clerk and shall be made available to the public during Agency business hours.

(d) *Summary decision.* (1) In the case of a hearing requested under § 86.612(i), when it clearly appears from the data and other information contained in the request for a hearing that there is no genuine and substantial question of fact with respect to the issues specified in § 86.614(c)(2)(ii), the Administrator shall enter an order denying the request for a hearing. In addition, if the original decision to suspend or revoke a certificate of conformity was made under § 86.612(d) prior to the decision to deny the request for a hearing, the

order denying the request will reaffirm the suspension or revocation.

(2) In the case of a hearing requested under § 86.084–30(d)(6)(i), to challenge a proposed suspension of a certificate of conformity for the reasons specified in § 86.084–30(d)(1) (i) or (ii), when it clearly appears from the data and other information contained in the request for a hearing that there is no genuine and substantial question of fact with respect to the issue of whether the refusal to comply with the provisions of a test order or any other requirement of § 86.603 was caused by conditions and circumstances outside the control of the manufacturer, the Administrator will enter an order denying the request for a hearing, and suspending the certificate of conformity.

(3) Any order issued under paragraph (d) (1) or (2) of this section shall have the force and effect of a final decision of the Administrator, as issued pursuant to paragraph (w)(4) of this section.

(4) If the Administrator determines that a genuine and substantial question of fact does exist with respect to any of the issues referred to in paragraphs (d)(1) and (2) of this section, he shall grant the request for a hearing and publish a notice of public hearing in accordance with paragraph (h) of this section.

(e) *Filing and service.* (1) An original and two copies of all documents or papers required or permitted to be filed pursuant to this section shall be filed with the Hearing Clerk. Filing shall be deemed timely if mailed, as determined by the postmark, to the Hearing Clerk within the time allowed by this section. If filing is to be accomplished by mailing, the documents shall be sent to the address set forth in the notice of public hearing as described in paragraph (h) of this section.

(2) To the maximum extent possible, testimony shall be presented in written form. Copies of written testimony shall be served upon all parties as soon as practicable prior to the start of the hearing. A certificate of service shall be provided on or accompany each document or paper filed with the Hearing Clerk. Documents to be served upon the Director of the Manufacturers Operations Division shall be sent by registered mail to: Director, Manufacturers Operations Division, U.S. Environmental Protection Agency (EN–340), 1200 Pennsylvania Ave., NW., WSM, Washington, DC 20460. Service by registered mail is complete upon mailing.

(f) *Time.* (1) In computing any period of time prescribed or allowed by this section, except as otherwise provided, the day of the act or event from which the designated period of time begins to run shall not be included. Saturdays, Sundays, and Federal legal holidays shall be included in computing any such period allowed for the filing of any document or paper, except that when such period expires on a Saturday, Sunday, or Federal legal holiday, such period shall be extended to include the next following business day.

(2) A prescribed period of time within which a party is required or permitted to do an act shall be computed from the time of service, except that when service is accomplished by mail, three days shall be added to the prescribed period.

(g) *Consolidation.* The Administrator or the Presiding Officer in his discretion may consolidate two or more proceedings to be held under this section for the purpose of resolving one or more issues whenever it appears that such consolidation will expedite or simplify consideration of such issues. Consolidation shall not affect the right of any party to raise issues that could have been raised if consolidation had not occurred.

(h) *Notice of public hearings.* (1) Notice of a public hearing under this section shall be given by publication in the FEDERAL REGISTER and by such other means as the Administrator finds appropriate to provide notice to the public. To the extent possible hearings under this section shall be scheduled to commence within 14 days of receipt of the application in paragraph (c) of this section.

(i) *Amicus curiae.* Persons not parties to the proceeding wishing to file briefs may do so by leave of the Presiding Officer granted on motion. A motion for leave shall identify the interest of the applicant and shall state the reasons why the proposed amicus brief is desirable.

(j) *Presiding Officer.* The Presiding Officer shall have the duty to conduct a

fair and impartial hearing in accordance with 5 U.S.C. sections 554, 556 and 557 and to take all necessary action to avoid delay in the disposition of the proceedings and to maintain order. He shall have all power consistent with Agency rule and with the Administrative Procedure Act necessary to this end, including the following:

(1) To administer oaths and affirmations;

(2) To rule upon offers of proof and exclude irrelevant or repetitious material;

(3) To regulate the course of the hearings and the conduct of the parties and their counsel therein;

(4) To hold conferences for simplification of the issues or any other proper purpose;

(5) To consider and rule upon all procedural and other motions appropriate in such proceedings;

(6) To require the submission of direct testimony in written form with or without affidavit whenever, in the opinion of the Presiding Officer, oral testimony is not necessary for full and true disclosure of the facts;

(7) To enforce agreements and orders requiring access as authorized by law;

(8) To require the filing of briefs on any matter on which he is required to rule;

(9) To require any party or any witness, during the course of the hearing, to state his position on any issue;

(10) To take or cause depositions to be taken whenever the ends of justice would be served thereby;

(11) To make decisions or recommend decisions to resolve the disputed issues on the record of the hearing;

(12) To issue, upon good cause shown, protective orders as described in paragraph (n) of this section.

(k) *Conferences.* (1) At the discretion of the Presiding Officer, conferences may be held prior to or during any hearing. The Presiding Officer shall direct the Hearing Clerk to notify all parties of the time and location of any such conference. At the discretion of the Presiding Officer, persons other than parties may attend. At a conference the Presiding Officer may:

(i) Obtain stipulations and admissions, receive requests and order depositions to be taken, identify disputed issues of fact and law, and require or allow the submission of written testimony from any witness or party;

(ii) Set a hearing schedule for as many of the following as are deemed necessary by the Presiding Officer:

(A) Oral and written statements;

(B) Submission of written direct testimony as required or authorized by the Presiding Officer;

(C) Oral direct and cross-examination of a witness where necessary as prescribed in paragraph (p) of this section: and

(D) Oral argument, if appropriate.

(iii) Identify matters of which official notice may be taken;

(iv) Consider limitation of the number of expert and other witnesses;

(v) Consider the procedure to be followed at the hearing; and

(vi) Consider any other matter that may expedite the hearing or aid in the disposition of the issue.

(2) The results of any conference including all stipulations shall, if not transcribed, be summarized in writing by the Presiding Officer and made part of the record.

(l) *Primary discovery* (exchange of witness lists and documents). (1) At a prehearing conference or within some reasonable time set by the Presiding Officer prior to the hearing, each party shall make available to the other parties the names of the expert and other witnesses the party expects to call, together with a brief summary of their expected testimony and a list of all documents and exhibits which the party expects to introduce into evidence. Thereafter, witnesses, documents, or exhibits may be added and summaries of expected testimony amended upon motion by a party.

(2) The Presiding Officer, may, upon motion by a party or other person, and for good cause shown, by order (i) restrict or defer disclosure by a party of the name of a witness or a narrative summary of the expected testimony of a witness, and (ii) prescribe other appropriate measures to protect a witness. Any party affected by any such action shall have an adequate opportunity, once he learns the name of a witness and obtains the narrative summary of his expected testimony, to prepare for the presentation of his case.

(m) *Other discovery*. (1) Except as so provided by paragraph (l) of this section, further discovery, under this paragraph, shall be permitted only upon determination by the Presiding Officer:

(i) That such discovery will not in any way unreasonably delay the proceeding;

(ii) That the information to be obtained is not obtainable voluntarily; and

(iii) That such information has significant probative value. The Presiding Officer shall be guided by the procedures set forth in the Federal Rules of Civil Procedure, where practicable, and the precedents thereunder, except that no discovery shall be undertaken except upon order of the Presiding Officer or upon agreement of the parties.

(2) The Presiding Officer shall order depositions upon oral questions only upon a showing of good cause and upon a finding that:

(i) The information sought cannot be obtained by alternative methods; or

(ii) There is a substantial reason to believe that relevant and probative evidence may otherwise not be preserved for presentation by a witness at the hearing.

(3) Any party to the proceeding desiring an order of discovery shall make a motion or motions therefor. Such a motion shall set forth:

(i) The circumstances warranting the taking of the discovery;

(ii) The nature of the information expected to be discovered; and

(iii) The proposed time and place where it will be taken.

If the Presiding Officer determines the motion should be granted, he shall issue an order for the taking of such discovery together with the conditions and terms thereof.

(4) Failure to comply with an order issued pursuant to this paragraph may lead to the inference that the information to be discovered would be adverse to the person or party from whom the information was sought.

(n) *Protective orders, in camera proceedings*. (1) Upon motion by a party or by the person from whom discovery is sought, and upon a showing by the movant that the disclosure of the information to be discovered, or a particular part thereof, (other than emission data) would result in methods or processes entitled to protection as trade secrets of such person being divulged, the Presiding Officer may enter a protective order with respect to such material. Any protective order shall contain such terms governing the treatment of the information as may be appropriate under the circumstances to prevent disclosure outside the hearing: *Provided*, That the order shall state that the material shall be filed separately from other evidence and exhibits in the hearing. Disclosure shall be limited to parties to the hearing, their counsel and relevant technical consultants, and authorized representatives of the United States concerned with carrying out the Act. Except in the case of the government, disclosure may be limited to counsel for parties who shall not disclose such information to the parties themselves. Except in the case of the government, disclosure to a party or his counsel shall be conditioned on execution of a sworn statement that no disclosure of the information will be made to persons not entitled to receive it under the terms of the protective order. (No such provision is necessary where government employees are concerned because disclosure by them is subject to the terms of 18 U.S.C. 1905.)

(2)(i) A party or person seeking a protective order may be permitted to make all or part of the required showing in camera. A record shall be made of such in camera proceedings. If the Presiding Officer enters a protective order following a showing in camera, the record of such showing shall be sealed and preserved and made available to the agency or court in the event of appeal.

(ii) Attendance at any in camera proceeding may be limited to the Presiding Officer, the agency, and the person or party seeking the protective order.

(3) Any party, subject to the terms and conditions of any protective order issued pursuant to paragraph (n)(1) of this section, desiring for the presentation of his case to make use of any in camera documents or testimony shall

make application to the Presiding Officer by motion setting forth the justification therefor. The Presiding Officer, in granting any such motion, shall enter an order protecting the rights of the affected persons and parties and preventing unnecessary disclosure of such information, including the presentation of such information and oral testimony and cross-examination concerning it in executive session, as in his discretion is necessary and practicable.

(4) In the submittal of proposed findings, briefs, or other papers, counsel for all parties shall make a good faith attempt to refrain from disclosing the specific details of in camera documents and testimony. This shall not preclude references in such proposed findings, briefs, or other papers to such documents or testimony including generalized statements based on their contents. To the extent that counsel considers it necessary to include specific details in their presentations, such data shall be incorporated in separate proposed findings, briefs, or other papers marked ''confidential,'' which shall become part of the in camera record.

(o) *Motions.* (1) All motions, except those made orally during the course of the hearing, shall be in writing and shall state with particularity the grounds therefore, shall set forth the relief or order sought, and shall be filed with the Hearing Clerk and served upon all parties.

(2) Within such time as may be fixed by the Environmental Appeals Board or the Presiding Officer, as appropriate, any party may serve and file an answer to the motion. The movant shall, if requested by the Environmental Appeals Board or the Presiding Officer, as appropriate, serve and file reply papers within the time set by the request.

(3) The Presiding Officer shall rule upon all motions filed or made prior to the filing of his decision or accelerated decision, as appropriate. The Environmental Appeals Board shall rule upon all motions filed prior to the appointment of a Presiding Officer and all motions filed after the filing of the decision of the Presiding Officer or accelerated decision. Oral argument of motions will be permitted only if the Presiding Officer or the Environmental Appeals Board, as appropriate, deems it necessary.

(p) *Evidence.* (1) The official transcripts and exhibits, together with all papers and requests filed in the proceeding, shall constitute the record. Immaterial or irrelevant parts of an admissible document shall be segregated and excluded so far as practicable. Documents or parts thereof subject to a protective order under paragraph (n) of this section shall be segregated. Evidence may be received at the hearing even though inadmissible under the rules of evidence applicable to judicial proceedings. The weight to be given evidence shall be determined by its reliability and probative value.

(2) The Presiding Officer shall allow the parties to examine and cross-examine a witness to the extent that such examination and cross-examination is necessary for a full and true disclosure of the facts.

(3) Rulings of the Presiding Officer on the admissibility of evidence, the propriety of examination and cross-examination and other procedural matters shall appear in the record.

(4) Parties shall automatically be presumed to have taken exception to an adverse ruling.

(q) *Record.* (1) Hearings shall be stenographically reported and transcribed and the original transcripts shall be part of the record and the sole official transcript. Copies of the record shall be filed with the Hearing Clerk and made available during Agency business hours for public inspection. Any person desiring a copy of the record of the hearing or any part thereof, except as provided in paragraph (n) of this section, shall be entitled to the same upon payment of the cost thereof.

(2) The official transcripts and exhibits, together with all papers and requests filed in the proceeding, shall constitute the record.

(r) *Proposed findings, conclusions.* (1) Within 4 days of the close of the reception of evidence, or within such longer time as may be fixed by the Presiding Officer, any party may submit for the consideration of the Presiding Officer proposed findings of fact, conclusions

of law, and a proposed order, together with reasons therefor and briefs in support thereof. Such proposals shall be in writing, shall be served upon all parties, and shall contain adequate references to the record and authorities relied upon.

(2) The record shall show the Presiding Officer's ruling on the proposed findings and conclusions except when his order disposing of the proceeding otherwise informs the parties of the action taken by him thereon.

(s) *Decision of the Presiding Officer*. (1) Unless extended by the Environmental Appeals Board, the Presiding Officer shall issue and file with the Hearing Clerk his decision within 14 days (or within 7 days in the case of a hearing requested under § 86.612(i)) after the period for filing proposed findings as provided for in paragraph (r) of this section has expired.

(2) The Presiding Officer's decision shall become the decision of the Environmental Appeals Board (i) when no notice of intention to appeal as described in paragraphs (t) and (u) of this section is filed, 10 days after issuance thereof, unless in the interim the Environmental Appeals Board shall have taken action to review or stay the effective date of the decision; or (ii), when a notice of intention to appeal is filed but the appeal is not perfected as required by paragraphs (t) or (u) of this section, 5 days after the period allowed for perfection of an appeal has expired unless within that 5 day period, the Environmental Appeals Board shall have taken action to review or stay the effective date of the decision.

(3) The Presiding Officer's decision shall include a statement of findings and conclusions, as well as the reasons or basis therefore, upon all the material issues of fact or law presented on the record and an appropriate rule or order. Such decision shall be supported by substantial evidence and based upon a consideration of the whole record.

(4) At any time prior to the issuance of his decision, the Presiding Officer may reopen the proceeding for the reception of further evidence. Except for the correction of clerical errors, the jurisdication of the Presiding Officer is terminated upon the issuance of his decision.

(t) *Appeal from the decision of the Presiding Officer*. (1) Any party to a proceeding may appeal the Presiding Officer's decision to the Environmental Appeals Board, *Provided*, That within 10 days after issuance of the Presiding Officer's decision such party files a notice of intention to appeal and an appeal brief within 20 days of such decision.

(2) When an appeal is taken from the decision of the Presiding Officer, any party may file a brief with respect to such appeal. The brief shall be filed within 15 days of the date of the filing of the appellant's brief.

(3) Any brief filed pursuant to this paragraph shall contain in the order indicated, the following:

(i) A subject index of the matter in the brief, with page references, and a table of cases (alphabetically arranged) textbooks, statutes, and other material cited, with page references thereto;

(ii) A specification of the issues intended to be urged: *Provided, however*, That in the case of a hearing requested under § 86.612(i), the brief shall be restricted to the issues specified in paragraph (c)(2)(ii) of this section;

(iii) The argument presenting clearly the points of fact and law relied upon in support of the position taken on each issue, with specific page references to the record and the legal or other material relied upon; and

(iv) A proposed order for the Environmental Appeals Board's consideration if different from the order contained in the Presiding Officer's decision.

(4) No brief in excess of 40 pages shall be filed without leave of the Environmental Appeals Board.

(5) Oral argument shall be allowed only in the discretion of the Environmental Appeals Board.

(u) *Summary appeal*. (1) In the case of a hearing requested under § 86.612(i), any appeal taken from the decision of the Presiding Officer shall be conducted under this paragraph.

(2) Any party to the proceeding may appeal the Presiding Officer's decision to the Environmental Appeals Board by filing a notice of appeal within 10 days.

(3) The notice appeal shall be in the form of a brief, and shall conform to

the requirements of paragraph (t)(3) of this section.

(4) Within 10 days after a notice of appeal from the decision of the Presiding Officer is filed under this paragraph, any party may file a brief with respect to such appeal.

(5) No brief in excess of 15 pages shall be filed without leave of the Environmental Appeals Board.

(v) *Review of the Presiding Officer's decision in absence of appeal.* (1) If after the expiration of the period for taking an appeal as provided for by paragraph (t) or (u) of this section no notice of intention to appeal the decision of the Presiding Officer has been filed, or if filed, not perfected, the Hearing Clerk shall so notify the Environmental Appeals Board.

(2) The Environmental Appeals Board, upon receipt of notice from the Hearing Clerk that no notice of intention to appeal the decision of the Presiding Officer has been filed, or if filed, not perfected pursuant to paragraph (t) or (u) of this section, may, on its own motion, within the time limits specified in paragraph (s)(2) of this section, review the decision of the Presiding Officer. Notice of the intention of the Environmental Appeals Board to review the decision of the Presiding Officer shall be given to all parties and shall set forth the scope of such review and the issues which shall be considered and shall make provision for filing of briefs.

(w) *Decision of appeal or review.* (1) Upon appeal from or review of the Presiding Officer's decision, the Environmental Appeals Board shall consider such parts of the record as are cited or as may be necessary to resolve the issues presented and in addition shall, to the extent necessary or desirable, exercise all the powers which it could have exercised if it had presided at the hearing.

(2) In rendering its decision, the Environmental Appeals Board shall adopt, modify or set aside the findings, conclusions, and order contained in the decision of the Presiding Officer and shall set forth in its decision a statement of the reasons or bases for its action.

(3) In those cases where the Environmental Appeals Board determines that it should further information or additional views of the parties as to the form and content of the rule or order to be issued, the Environmental Appeals Board, in its discretion, may withhold final action pending the receipt of such additional information or views, or may remand the case to the Presiding Officer.

(4) Any decision rendered under this paragraph which completes disposition of a case shall be a final decision of the Environmental Appeals Board.

(x) *Reconsideration.* Within twenty (20) days after issuance of the Environmental Appeals Board's decision, any party may file with the Environmental Appeals Board a petition for reconsideration of such decision, setting forth the relief desired and the grounds in support thereof. Any petition filed under this subsection must be confined to new questions raised by the decision or final order and upon which the petitioner had no opportunity to argue before the Presiding Officer or the Environmental Appeals Board; *Provided, however,* That in the case of a hearing requested under § 86.612(i) such new questions shall be limited to the issues specified in paragraph (c)(2)(ii) of this section. Any party desiring to oppose such a petition shall file an answer thereto within ten (10) days after the filing of the petition. The filing of a petition for reconsideration shall not operate to stay the effective date of the decision or order or to toll the running of any statutory time period affecting such decision or order unless specifically so ordered by the Environmental Appeals Board.

(y) *Accelerated decision, dismissal.* (1) The Presiding Officer, upon motion of any party or sua sponte, may at any time render an accelerated decision in favor of the Agency or the manufacturer as to all or any part of the proceeding, without further hearing or upon such limited additional evidence such as affidavits as he may require, or dismiss any party with prejudice, for any of the following reasons:

(i) Failure to state a claim upon which relief can be granted, or direct or collateral estoppel;

(ii) The lack of any genuine issue of material fact, causing a party to be entitled to judgment as a matter of law; or

(iii) Such other and further reasons as are just, including specifically failure to obey a procedural order of the Presiding Officer.

(2) If under this paragraph an accelerated decision is issued as to all the issues and claims joined in the proceeding, the decision shall be treated for the purposes of these procedures as the decision of the Presiding Officer as provided in paragraph (s) of this section.

(3) If under this paragraph, judgment is rendered on less than all issues or claims in the proceeding, the Presiding Officer shall determine what material facts exist without substantial controversy and what material facts are actually and in good faith controverted. He shall thereupon issue an order specifying the facts which appear without substantial controversy, and the issues and claims upon which the hearing will proceed.

(z) *Conclusion of hearing.* (1) If, after the expiration of the period for taking an appeal as provided for by paragraph (t) and (u) of this section, no appeal has been taken from the Presiding Officer's decision, and after the expiration of the period for review by the Environmental Appeals Board on its own motion as provided for by paragraph (v) of this section, the Environmental Appeals Board does not move to review such decision, the hearing will be deemed to have ended at the expiration of all periods allowed for such appeal and review.

(2) If an appeal of the Presiding Officer's decision is taken pursuant to paragraphs (t) and (u) of this section, or if, in the absence of such appeal, the Environmental Appeals Board moves to review the decision of the Presiding Officer pursuant to paragraph (v) of this section, the hearing will be deemed to have ended upon rendering of a final decision by the Environmental Appeals Board.

(aa) *Judicial review.* (1) The Administrator hereby designates the General Counsel, Environmental Protection Agency as the officer upon whom copy of any petition for judicial review shall be served. Such officer shall be responsible for filing in the court the record on which the order of the Environmental Appeals Board is based.

(2) Before forwarding the record to the court, the Agency shall advise the petitioner of costs of preparing it and as soon as payment to cover fees is made, shall forward the record to the court.

[41 FR 31483, July 28, 1976, as amended at 43 FR 4553, Feb. 2, 1978; 44 FR 61962, Oct. 29, 1979. Redesignated and amended at 49 FR 48484, Dec. 12, 1984, and further redesignated at 54 FR 2123, Jan. 19, 1989; 57 FR 5330, Feb. 13, 1992]

§ 86.615–84 Treatment of confidential information.

(a) Any manufacturer may assert that some or all of the information submitted pursuant to this subpart is entitled to confidential treatment as provided by 40 CFR part 2, subpart B.

(b) Any claim of confidentiality must accompany the information at the time it is submitted to EPA.

(c) To assert that information submitted pursuant to this subpart is confidential, a manufacturer must indicate clearly the items of information claimed confidential by marking, circling, bracketing, stamping, or otherwise specifying the confidential information. Furthermore, EPA requests, but does not require, that the submitter also provide a second copy of its submittal from which all confidential information has been deleted. If a need arises to publicly release nonconfidential information, EPA will assume that the submitter has accurately deleted the confidential information from this second copy.

(d) If a claim is made that some or all of the information submitted pursuant to this subpart is entitled to confidential treatment, the information covered by that confidentiality claim will be disclosed by the Environmental Appeals Board only to the extent and by means of the procedures set forth in part 2, subpart B, of this chapter.

(e) Information provided without a claim of confidentiality at the time of submission may be made available to the public by EPA without further notice to the submitter, in accordance with 40 CFR 2.204(c)(2)(i)(A).

[50 FR 34798, Aug. 27, 1985. Redesignated at 54 FR 2123, Jan. 19, 1989, and amended at 57 FR 5332, Feb. 13, 1992]

Subpart H—General Provisions for In-Use Emission Regulations for 1994 and Later Model Year Light-Duty Vehicles and Light-Duty Trucks

SOURCE: 56 FR 25781, June 5, 1991, unless otherwise noted.

§ 86.701–94 General applicability.

(a) The provisions of this subpart apply to: 1994 and later model year Otto-cycle and diesel light-duty vehicles; 1994 and later model year Otto-cycle and diesel light-duty trucks; and 1994 and later model year Otto-cycle and diesel heavy-duty engines; and 2001 and later model year Otto-cycle heavy-duty vehicles and engines certified under the provisions of subpart S of this part. The provisions of subpart B of this part apply to this subpart.

(b) References in this subpart to engine families and emission control systems shall be deemed to apply to durability groups and test groups as applicable for manufacturers certifying new light-duty vehicles, light-duty trucks, and Otto-cycle heavy-duty vehicles and engines under the provisions of subpart S of this part.

[65 FR 59957, Oct. 6, 2000]

§ 86.702–94 Definitions.

The definitions in subparts A and B of this part apply to this subpart.

§ 86.703–94 Abbreviations.

The abbreviations in subparts A and B of this part apply to this subpart.

§ 86.704–94 Section numbering; construction.

Section § 86.104 of subpart B applies to this subpart.

§§ 86.705–94—86.707–94 [Reserved]

§ 86.708–94 In-use emission standards for 1994 and later model year light-duty vehicles.

Section 86.708–94 includes text that specifies requirements that differ from § 86.090–8 of subpart A of this part. Where a paragraph in § 86.090–8 is identical and applicable to § 86.708–94, this may be indicated by specifying the corresponding paragraph and the statement ''[Reserved]. For guidance see § 86.090–8.'' Where a corresponding paragraph of § 86.090–8 is not applicable, this is indicated by the statement ''[Reserved].''

(a)(1) *Standards.* (i) In-use exhaust emissions from 1994 and later model year light-duty vehicles shall meet all standards in tables H94–3 and H94–4 in the rows designated with the applicable fuel type, according to the implementation schedules in tables H94–1 and H94–2, and shall meet all standards in tables H94–6 and H94–7 in the rows designated with the applicable fuel type, according to the implementation schedules in table H94–5, as follows:

(A)(*1*)(*i*) For model years 1994 and 1995, a minimum of the percentage shown in table H94–1 of a manufacturer's sales of the applicable model year's light-duty vehicles shall not exceed the applicable Tier 1_I standards in table H94–3. The remaining vehicles, if any, shall not exceed the applicable Tier 0 standards in table H94–3.

(*ii*) For model years 1996 and beyond, a minimum of the percentages shown in table H94–2 of a manufacturer's sales of the applicable model year's light-duty vehicles shall not exceed the applicable Tier 1 standards in tables H94–3 and H94–4. The remaining vehicles, if any, shall not exceed the applicable Tier 1_I standards in table H94–3.

(*2*) *Particulates.* For in-use exhaust emissions for model years 1994 and later, a minimum of the percentage shown in table H94–5 of a manufacturer's sales of the applicable model year's light-duty vehicles shall not exceed the applicable Tier 1 standards in tables H94–6 and H94–7. The remaining vehicles, if any, shall not exceed the applicable Tier 0 standards in table H94–6.

(*3*) Optionally, compliance with the Tier 1_I and Tier 1 implementation schedules of this section may be based on the combined sales of light-duty vehicles and light light-duty trucks, if such option was taken for certification as allowed in § 86.094–8 and § 86.094–9 of subpart A of this part. Vehicles meeting Tier 1_I in-use standards shall only be combined for this purpose with other vehicles meeting Tier 1_I standards, and those meeting Tier 1 standards shall only be combined with those meeting the Tier 1 standards.

TABLE H94–1—IMPLEMENTATION SCHEDULE FOR LIGHT-DUTY VEHICLES FOR HCS, CO AND NO_X

Model year	Tier 1_I percentage
1994	40
1995	80
1996	60
1997	20
After 1997	0

TABLE H94–2—IMPLEMENTATION SCHEDULE FOR LIGHT-DUTY VEHICLES FOR HCS, CO AND NO_X

Model year	Tier 1 percentage
1994	0
1995	0
1996	40
1997	80
After 1997	100

TABLE H94–3—INTERMEDIATE USEFUL LIFE[1] STANDARDS (G/MI) FOR LIGHT-DUTY VEHICLES FOR HCS, CO AND NO_X

Fuel	Standards	THC	NMHC	THCE	NMHCE	CO	NO_X
Gasoline	Tier 0	0.41	.....	.....	.....	3.4	1.0
Gasoline	Tier 1_I	0.41	0.32	.....	.....	3.4	0.4
Gasoline	Tier 1	0.41	0.25	.....	.....	3.4	0.4
Diesel	Tier 0	0.41	.....	.....	.....	3.4	1.0
Diesel	Tier 1_I	0.41	0.32	.....	.....	3.4	1.0
Diesel	Tier 1	0.41	0.25	.....	.....	3.4	1.0
Methanol	Tier 0	.....	.....	0.41	.....	3.4	1.0
Methanol	Tier 1_I	.....	.....	0.41	0.32	3.4	0.4
Methanol	Tier 1	.....	.....	0.41	0.25	3.4	0.4
Natural Gas	Tier 0	.....	0.34	.....	.....	3.4	1.0
Natural Gas	Tier 1_I	.....	0.32	.....	.....	3.4	0.4
Natural Gas	Tier 1	.....	0.25	.....	.....	3.4	0.4
LPG	Tier 0	0.41	.....	.....	.....	3.4	1.0
LPG	Tier 1_I	0.41	0.32	.....	.....	3.4	0.4
LPG	Tier 1	0.41	0.25	.....	.....	3.4	0.4

[1] The applicable useful life is 5 years or 50,000 miles, whichever first occurs.

TABLE H94–4—FULL USEFUL LIFE[1] STANDARDS (G/MI) FOR LIGHT-DUTY VEHICLES FOR HCS, CO AND NO_X

Fuel	Standards	THC	NMHC	THCE	NMHCE	CO	NO_X
Gasoline	Tier 0	.....	.....	.....	.....	.....	.....
Gasoline	Tier 1	.....	0.31	.....	.....	4.2	0.60
Diesel	Tier 0	.....	.....	.....	.....	.....	.....
Diesel	Tier 1	.....	0.31	.....	.....	4.2	1.25
Methanol	Tier 0	.....	.....	.....	.....	.....	.....
Methanol	Tier 1	.....	.....	.....	0.31	4.2	0.60
Natural Gas	Tier 0	.....	.....	.....	.....	.....	.....
Natural Gas	Tier 1	.....	0.31	.....	.....	4.2	0.60
LPG	Tier 0	.....	.....	.....	.....	.....	.....
LPG	Tier 1	.....	0.31	.....	.....	4.2	0.60

[1] The applicable useful life is 10 years or 100,000 miles, whichever first occurs, except that no enforcement testing will be done beyond 7 years or 75,000 miles, whichever first occurs.

TABLE H94–5—IMPLEMENTATION SCHEDULE FOR LIGHT-DUTY VEHICLES FOR PM

Model year	Tier 1 percentage
1994	40
1995	80
After 1995	100

TABLE H94–6—INTERMEDIATE USEFUL LIFE [1] STANDARDS (G/MI) FOR LIGHT-DUTY VEHICLES FOR PM

Fuel	Standards	PM
Gasoline	Tier 0	.....
Gasoline	Tier 1	0.08
Diesel	Tier 0	0.20
Diesel	Tier 1	0.08
Methanol	Tier 0	[2] 0.20
Methanol	Tier 1	10.08
Natural Gas	Tier 0	[2] 0.20
Natural Gas	Tier 1	0.08
LPG	Tier 0	[2] 0.20
LPG	Tier 1	0.08

[1] The applicable useful life is 5 years or 50,000 miles, whichever first occurs.
[2] Applicable only to diesel-cycle vehicles.

TABLE H94–7—FULL USEFUL LIFE [1] STANDARDS (G/MI) FOR LIGHT-DUTY VEHICLES FOR PM

Fuel	Standards	PM
Gasoline	Tier 0	.....
Gasoline	Tier 1	0.10
Diesel	Tier 0	.....
Diesel	Tier 1	0.10
Methanol	Tier 0	.....
Methanol	Tier 1	0.10
Natural Gas	Tier 0	.....
Natural Gas	Tier 1	0.10
LPG	Tier 0	.....
LPG	Tier 1	0.10

[1] The applicable useful life is 10 years or 100,000 miles, whichever first occurs, except that no enforcement testing will be done beyond 7 years or 75,000 miles, whichever first occurs.

(B)(*1*)(*i*) Sales percentages for the purposes of determining compliance with paragraph (a)(1)(i) of this section shall be based on total actual U.S. sales of light-duty vehicles of the applicable model year by a manufacturer to a dealer, distributor, fleet operator, broker, or any other entity which comprises the point of first sale. If the option of paragraph (a)(1)(i)(A)(*3*) is taken, such sales percentages shall be based on the total actual combined U.S. sales of light-duty vehicles and light light-duty trucks of the applicable model year by a manufacturer to a dealer, distributor, fleet operator, broker, or any other entity which comprises the point of first sale.

(*ii*) The manufacturer may petition the Administrator to allow actual volume produced for U.S. sales to be used in lieu of actual U.S. sales for purposes of determining compliance with the implementation schedule sales percentages of tables H94–1, H94–2 and H94–5 of this section. Such petition shall be submitted within 30 days of the end of the model year to the Manufacturers Operations Division. For the petition to be granted, the manufacturer must establish to the satisfaction of the Administrator that actual production volume is functionally equivalent to actual sales volume.

(*iii*) The vehicles that are counted toward the implementation schedule sales percentage, or toward the total on which such percentage is based, for certification purposes as prescribed by § 86.094–8 (a)(1)(i)(B)(*1*)(*iii*) of subpart A of this part, shall be the same vehicles that are counted toward the implementation schedule sales percentage, or the total on which it is based, for in-use purposes.

(*iv*) Small volume manufacturers, as defined in § 86.092–14 (b) (1) and (2), are exempt from the implementation schedules of tables H94–1 and H94–2 of this section for model years 1994 through 1997, and from the implementation schedule of table H94–5 of this section for model years 1994 and 1995. For small volume manufacturers, Tier 0 standards of table H94–6 continue to apply until model year 1996 and Tier 0 standards of table H94–3 continue to apply until model year 1998, when one hundred percent compliance with the Tier 1 standards of tables H94–3, H94–4,

H94–6, and H94–7 is required. This exemption does not apply to small volume engine families as defined in § 86.092–14 (b)(5).

(*2*)(*i*) For 1994 and 1995 model year light-duty vehicles, the engine families which comprise the required implementation schedule percentage of sales meeting Tier 1 standards for HCs, CO, and NO_X, for purposes of certification, shall be the same engine families which comprise the required implementation schedule percentage of sales meeting the interim in-use standards (labeled ''Tier 1_I'' in the tables of in-use standards) for in-use purposes.

(*ii*) For 1996 and 1997 model year light-duty vehicles the engine families which comprise the required implementation schedule percentage of sales meeting interim in-use standards (labeled ''Tier 1_I'' in the tables of in-use standards) and final in-use standards (labeled ''Tier 1'' in the tables of in-use standards) respectively, for HCs, CO, and NO_X, for in-use purposes, shall be designated by the manufacturer at the time of Application for Certification.

(*iii*) For 1994 and 1995 model year light-duty vehicles, the engine families which comprise the required implementation schedule percentage of sales meeting Tier 1 standards, for PM, for purposes of certification, shall be the same engine families which comprise the required implementation schedule percentage of sales meeting the final in-use standards (labeled ''Tier 1'' in the tables of in-use standards) for PM for in-use purposes.

(*3*) The manufacturer must state at the time of Application for Certification, based on projected U.S. sales or projected production for U.S. sale, which families will be used to attain the required implementation schedule sales percentages for in-use purposes.

(*4*) A manufacturer cannot use one set of engine families to meet its in-use intermediate useful life standards and another to meet its in-use full useful life standards. The same families which are used to meet the intermediate useful life standards will be required without deviation to meet the corresponding full useful life standards.

(ii) Engine families participating in the particulate averaging program as specified in § 86.094–8 (a)(1)(ii) shall be subject, for purposes of in-use compliance, to the particulate family emission limit determined for that engine family for certification purposes, in lieu of the appropriate particulate standard shown in the tables of in-use standards in this section.

(iii) CST emissions from model year 1996 and later gasoline-fueled Otto-cycle light-duty vehicles measured and calculated in accordance with subpart O of this part may not exceed the standards listed in paragraphs (a)(1)(iii) (A) and (B) of this section.

(A) Hydrocarbons: 220 ppm as hexane.

(B) Carbon monoxide: 1.2 percent.

(2) The standards set forth in paragraph (a)(1)(i) of this section refer to the exhaust emitted over a driving schedule as set forth in subpart B of this part and measured and calculated in accordance with those procedures. The test weight basis for light-duty vehicles, for the purposes of determining equivalent test weight as prescribed in § 86.129–94, shall be loaded vehicle weight.

(3) The standards set forth in paragraph (a)(1)(iii) of this section refer to the exhaust emitted during the CST as set forth in subpart O of this part and measured and calculated in accordance with those provisions.

(b) The provisions of § 86.090–8(b) through (h) of subpart A of this part apply to this section. The provisions of § 86.096–8(i) through (k) of subpart A of this part apply to this section.

[56 FR 25781, June 5, 1991, as amended at 57 FR 31922, July 17, 1992; 58 FR 33211, June 16, 1993; 58 FR 58424, Nov. 1, 1993; 59 FR 33913, July 1, 1994; 59 FR 48515, Sept. 21, 1994]

§ 86.708–98 In-use emission standards for 1998 and later model year light-duty vehicles.

Section 86.708–98 includes text that specifies requirements that differ from § 86.090–8 of subpart A of this part. Where a paragraph in § 86.090–8 is identical and applicable to § 86.708–98, this may be indicated by specifying the corresponding paragraph and the statement ''[Reserved]. For guidance see § 86.090–8.'' Where a corresponding paragraph of § 86.090–8 is not applicable, this is indicated by the statement ''[Reserved].''

(a)(1)(i) In-use exhaust emissions from 1998 and later model year light-duty vehicles shall meet all standards in tables H98–1 and H98–2 in the rows designated with the applicable fuel type.

TABLE H98–1—INTERMEDIATE USEFUL LIFE [1] STANDARDS (G/MI) FOR LIGHT-DUTY VEHICLES

Fuel	THC	NMHC	THCE	NMHCE	CO	NO_x	PM
Gasoline	0.41	0.25	.....	.....	3.4	0.4	0.08
Diesel	0.41	0.25	.....	.....	3.4	1.0	0.08
Methanol	.....	.....	0.41	0.25	3.4	0.4	0.08
Natural Gas	.....	0.25	.....	.....	3.4	0.4	0.08
LPG	0.41	0.25	.....	.....	3.4	0.4	0.08

[1] The applicable useful life is 5 years or 50,000 miles, whichever first occurs.

TABLE H98–2—FULL USEFUL LIFE [1] STANDARDS (G/MI) FOR LIGHT-DUTY VEHICLES

Fuel	THC	NMHC	THCE	NMHCE	CO	NO_x	PM
Gasoline	.....	0.31	.....	.....	4.2	0.6	0.10
Diesel	.....	0.31	.....	.....	4.2	1.25	0.10
Methanol	.....	.....	.....	0.31	4.2	0.6	0.10
Natural Gas	.....	0.31	.....	.....	4.2	0.6	0.10
LPG	.....	0.31	.....	.....	4.2	0.6	0.10

[1] The applicable useful life is 10 years or 100,000 miles, whichever first occurs, except that no enforcement testing will be done beyond 7 years or 75,000 miles, whichever first occurs.

(ii)(A) Vehicles subject to the standards of paragraph (a)(1)(i) of this section shall be all actual U.S. sales of light-duty vehicles of the applicable model year by a manufacturer.

(B) A manufacturer cannot use one set of engine families to meet its in-use intermediate useful life standards and another to meet its in-use full useful life standards. The same families which are used to meet the intermediate useful life standards will be required without deviation to meet the corresponding full useful life standards.

(iii) CST emissions from gasoline-fueled Otto-cycle light-duty vehicles measured and calculated in accordance with subpart O of this part may not exceed the standards listed in paragraphs (a)(1)(iii) (A) and (B) of this section.

(A) Hydrocarbons: 220 ppm as hexane.

(B) Carbon monoxide: 1.2 percent.

(2) The standards set forth in paragraph (a)(1) of this section refer to the exhaust emitted over a driving schedule as set forth in subpart B of this part and measured and calculated in accordance with those procedures. The test weight basis for light-duty vehicles, for the purposes of determining equivalent test weight as prescribed in § 86.129–94, shall be loaded vehicle weight.

(3) The standards set forth in paragraph (a)(1)(iii) of this section refer to the exhaust emitted during the CST as set forth in subpart O of this part and measured and calculated in accordance with those provisions.

(b) The provisions of § 86.090–8 (b) through (h) of subpart A of this part apply to this section. The provisions of § 86.096–8 (i) through (j) of subpart A of this part apply to this section.

[56 FR 25781, June 5, 1991, as amended at 58 FR 58424, Nov. 1, 1993; 59 FR 33913, July 1, 1994; 59 FR 48516, Sept. 21, 1994]

§ 86.709–94 In-use emission standards for 1994 and later model year light-duty trucks.

Section 86.709–94 includes text that specifies requirements that differ from § 86.091–9 of subpart A of this part. Where a paragraph in § 86.091–9 is identical and applicable to § 86.709–94, this may be indicated by specifying the corresponding paragraph and the statement ''[Reserved]. For guidance see § 86.091–9.'' Where a corresponding paragraph of § 86.091–9 is not applicable, this is indicated by the statement ''[Reserved].''

(a)(1) *Standards*—(i) *Light light-duty trucks.* In-use exhaust emissions from 1994 and later model year light light-duty trucks shall meet all standards in tables H94–9 and H94–10 in the rows designated with the applicable fuel type and loaded vehicle weight, according to

the implementation schedule in table H94–8, and shall meet all standards in tables H94–12 and H94–13 in the rows designated with the applicable fuel type and loaded vehicle weight, according to the implementation schedules in table H94–11, as follows:

(A)(*1*)(*i*) For model year 1994 and 1995, a minimum of the respective percentages shown in the Tier 1_I column of table H94–8 of a manufacturer's sales of the applicable model year's light light-duty trucks shall not exceed the applicable Tier 1_I standards in tables H94–9 and H94–10. The remaining vehicles, if any, shall not exceed the applicable Tier 0 standards in tables H94–9 and H94–10.

(*ii*) For model years 1996 and 1997, a minimum of the percentages shown in the Tier 1 percentage column of table H94–8 of a manufacturer's sales of the applicable model year's light light-duty trucks shall not exceed the applicable Tier 1 standards in table H94–9 and H94–10, and the remaining vehicles, if any, shall not exceed the applicable Tier 1_I standards in tables H94–9 and H94–10.

(*iii*) For model year 1998 and beyond, a minimum of the percentage shown in the Tier 1 percentage column of table H94–8 of a manufacturer's sales of the applicable model year's light light-duty trucks shall not exceed the applicable Tier 1 standards in tables H94–9 and H94–10.

(*2*) *Particulates*. For in-use exhaust emissions for 1994 and later, a minimum of the percentage shown in table H94–11 of a manufacturer's sales of the applicable model year's light light-duty trucks shall not exceed the applicable Tier 1 standards in tables H94–12 and H94–13. The remaining light light-duty trucks, if any, shall not exceed the applicable Tier 0 standards in tables H94–12 and H94–13.

(*3*) Optionally, compliance with the Tier 1_I and Tier 1 implementation schedules of this section may be based on the combined sales of light-duty vehicles and light light-duty trucks, if such option was taken for certification as allowed in § 86.094–8 and § 86.094–9 of subpart A of this part. Vehicles meeting Tier 1_I in-use standards shall only be combined for this purpose with other vehicles meeting Tier 1_I standards, and those meeting Tier 1 standards shall only be combined with those meeting the Tier 1 standards.

TABLE H94–8—IMPLEMENTATION SCHEDULE FOR LIGHT LIGHT-DUTY TRUCKS FOR HCS, CO AND NO_X

Model year	Tier 1_I percentage	Tier 1 percentage
1994	40	0
1995	80	0
1996	60	40
1997	20	80
1998	0	100

TABLE H94–9—INTERMEDIATE USEFUL LIFE [1] STANDARDS (G/MI) FOR LIGHT LIGHT-DUTY TRUCKS FOR HCS, CO AND NO_X

Fuel	LVW (lbs)	Standards	THC	NMHC	THCE	NMHCE	CO	NO_X
Gasoline	0–3750	Tier 0	0.80				10	1.2
Gasoline	0–3750	Tier 1	0.80	0.32			5.2	0.4
Gasoline	0–3750	Tier 1	0.80	0.25			3.4	0.4
Gasoline	3751–5750	Tier 0	0.80				10	1.7
Gasoline	3751–5750	Tier 1_I	0.80	0.41			6.7	0.7
Gasoline	3751–5750	Tier 1	0.80	0.32			4.4	0.7
Diesel	0–3750	Tier 0	0.80				10	1.2
Diesel	0–3750	Tier 1_I	0.80	0.32			5.2	1.2
Diesel	0–3750	Tier 1	0.80	0.25			3.4	1.0
Diesel	3751–5750	Tier 0	0.80				10	1.7
Diesel	3751–5750	Tier 1_I	0.80	0.41			6.7	1.7
Diesel	3751–5750	Tier 1	0.80	0.32			4.4	0.97
Methanol	0–3750	Tier 0			0.80		10	1.2
Methanol	0–3750	Tier 1_I			0.80	0.32	5.2	0.4
Methanol	0–3750	Tier 1			0.80	0.25	3.4	0.4
Methanol	3751–5750	Tier 0			0.80		10	1.7
Methanol	3751–5750	Tier 1_I			0.80	0.41	6.7	0.7

TABLE H94–9—INTERMEDIATE USEFUL LIFE [1] STANDARDS (G/MI) FOR LIGHT LIGHT-DUTY TRUCKS FOR HCS, CO AND NO_X—Continued

Fuel	LVW (lbs)	Standards	THC	NMHC	THCE	NMHCE	CO	NO_X
Methanol	3751–5750	Tier 1			0.80	0.32	4.4	0.7
Natural Gas	0–3750	Tier 0		0.67			10	1.2
Natural Gas	0–3750	Tier 1_1		0.32			5.2	0.4
Natural Gas	0–3750	Tier 1		0.25			3.4	0.4
Natural Gas	3751–5750	Tier 0		0.67			10	1.7
Natural Gas	3751–5750	Tier 1_1		0.41			6.7	0.7
Natural Gas	3751–5750	Tier 1		0.32			4.4	0.7
LPG	0–3750	Tier 0	0.80			10	1.2	
LPG	0–3750	Tier 1_1	0.80	0.32			5.2	0.4
LPG	0–3750	Tier 1	0.80	0.25			3.4	0.4
LPG	3751–5750	Tier 0	0.80			10	1.7	
LPG	3751–5750	Tier 1_1	0.80	0.41		6.7	0.7	
LPG	3751–5750	Tier 1	0.80	0.32			4.4	0.7

[1] The applicable useful life is 5 years or 50,000 miles, whichever first occurs.

TABLE H94–10—FULL USEFUL LIFE STANDARDS (G/MI) FOR LIGHT LIGHT-DUTY TRUCKS FOR HCS, CO AND NO_X

Fuel	LVW (lbs)	Standards	THC[2]	NMHC[1]	THCE[2]	NMHCE[1]	CO[1]	NO_X[1]
Gasoline	0–3750	Tier 0	0.80				10	1.2
Gasoline	0–3750	Tier 1	0.80	0.31			4.2	0.60
Gasoline	3751–5750	Tier 0	0.80				10	1.7
Gasoline	3751–5750	Tier 1	0.80	0.40			5.5	0.97
Diesel	0–3750	Tier 0	0.80				10	1.2
Diesel	0–3750	Tier 1	0.80	0.31			4.2	1.25
Diesel	3751–5750	Tier 0	0.80				10	1.7
Diesel	3751–5750	Tier 1	0.80	0.40			5.5	0.97
Methanol	0–3750	Tier 0			0.80		10	1.2
Methanol	0–3750	Tier 1			0.80	0.31	4.2	0.60
Methanol	3751–5750	Tier 0			0.80		10	1.7
Methanol	3751–5750	Tier 1			0.80	0.40	5.5	0.97
Natural Gas	0–3750	Tier 0	2.93	0.67			10	1.2
Natural Gas	0–3750	Tier 1	2.93	0.31			4.2	0.60
Natural Gas	3751–5750	Tier 0	2.93	0.67			10	1.7
Natural Gas	3751–5750	Tier 1	2.93	0.40			5.5	0.97
LPG	0–3750	Tier 0	0.80				10	1.2
LPG	0–3750	Tier 1	0.80	0.31			4.2	0.60
LPG	3751–5750	Tier 0	0.80				10	1.7
LPG	3751–5750	Tier 1	0.08	0.40			5.5	0.97

[1] The applicable useful life is 10 years or 100,000 miles, which ever first occurs, except that no enforcement testing will be done beyond 7 years or 75,000 miles, whichever first occurs.
[2] The applicable useful life is 11 years or 120,000 miles, whichever first occurs.

TABLE H94–11—IMPLEMENTATION SCHEDULE FOR LIGHT LIGHT-DUTY TRUCKS FOR PM

Model year	Tier 1 percentage
1994	0%
1995	40%
1996	80%
after 1996	100%

TABLE H94–12—INTERMEDIATE USEFUL LIFE [1] STANDARDS (G/MI) FOR LIGHT LIGHT-DUTY TRUCKS FOR PM

Fuel	LVW (lbs)	Standards	PM
Gasoline	0–3750	Tier 0	
Gasoline	0–3750	Tier 1	0.08
Gasoline	3751–5750	Tier 0	
Gasoline	3751–5750	Tier 1	0.08
Diesel	0–3750	Tier 0	0.26
Diesel	0–3750	Tier 1	0.08
Diesel	3751–5750	Tier 0	0.13
Diesel	3751–5750	Tier 1	0.08
Methanol	0–3750	Tier 0	

TABLE H94–12—INTERMEDIATE USEFUL LIFE [1] STANDARDS (G/MI) FOR LIGHT LIGHT-DUTY TRUCKS FOR PM—Continued

Fuel	LVW (lbs)	Standards	PM
Methanol	0–3750	Tier 1	0.08
Methanol	3751–5750	Tier 0	.....
Methanol	3751–5750	Tier 1	0.08
Natural Gas	0–3750	Tier 0	[2] 0.26
Natural Gas	0–3750	Tier 1	0.08
Natural Gas	3751–5750	Tier 0	[2] 0.13
Natural Gas	3751–5750	Tier 1	0.08
LPG	0–3750	Tier 0	[2] 0.26
LPG	0–3750	Tier 1	0.08
LPG	3751–5750	Tier 0	[2] 0.13
LPG	3751–5750	Tier 1	0.08

[1] The applicable useful life is 5 years or 50,000 miles, whichever first occurs.
[2] Applicable only to diesel-cycle vehicles.

TABLE H94–13—FULL USEFUL LIFE [1] STANDARDS (G/MI) FOR LIGHT LIGHT-DUTY TRUCKS FOR PM

Fuel	LVW (lbs)	Standards	PM
Gasoline	0–3750	Tier 0	.....
Gasoline	0–3750	Tier 1	0.10
Gasoline	3751–5750	Tier 0	.....
Gasoline	3751–5750	Tier 1	0.10
Diesel	0–3750	Tier 0	0.26
Diesel	0–3750	Tier 1	0.10
Diesel	3751–5750	Tier 0	0.13
Diesel	3751–5750	Tier 1	0.10
Methanol	0–3750	Tier 0	.....
Methanol	0–3750	Tier 1	0.10
Methanol	3751–5750	Tier 0	.....
Methanol	3751–5750	Tier 1	0.10
Natural Gas	0–3750	Tier 0	[2] 0.26
Natural Gas	0–3750	Tier 1	0.10
Natural Gas	3751–5750	Tier 0	[2] 0.13
Natural Gas	3751–5750	Tier 1	0.10
LPG	0–3750	Tier 0	[2] 0.26
LPG	0–3750	Tier 1	0.10
LPG	3751–5750	Tier 0	[2] 0.13
LPG	3751–5750	Tier 1	0.10

[1] The applicable useful life is 10 years or 100,000 miles, whichever first occurs, except that no enforcement testing will be done beyond 7 years or 75,000 miles, whichever first occurs.
[2] Applicable only to diesel-cycle vehicles.

(B)(*1*)(*i*) Sales percentages for the purposes of determining compliance with paragraph (a)(1)(i)(A) of this section shall be based on total actual U.S. sales of light-duty vehicles of the applicable model year by a manufacturer to a dealer, distributor, fleet operator, broker, or any other entity which comprises the point of first sale. If the option of paragraph (a)(1)(i)(A)(*3*) is taken, such sales percentages shall be based on the total actual combined U.S. sales of light-duty vehicles and light light-duty trucks of the applicable model year by a manufacturer to a dealer, distributor, fleet operator, broker, or any other entity which comprises the point of first sale.

(*ii*) The manufacturer may petition the Administrator to allow actual volume produced for U.S. sale to be used in lieu of actual U.S. sales for purposes of determining compliance with the implementation schedule sales percentages of tables H94–8 and H94–11 of this section. Such petition shall be submitted within 30 days of the end of the model year to the Manufacturers Operations Division. For the petition to be granted, the manufacturer must establish to the satisfaction of the Administrator that actual production volume is functionally equivalent to actual sales volume.

(*iii*) The vehicles that are counted toward the implementation schedule sales percentage, or toward the total on which such percentage is based, for certification purposes as prescribed by § 86.094–9(a)(1)(i)(B)(*1*)(*iii*) of subpart A

of this part, shall be the same vehicles that are counted toward the implementation schedule sales percentage, or the total on which it is based, for in-use purposes.

(*iv*) Small volume manufacturers, as defined in § 86.092–14(b) (1) and (2), are exempt from the implementation schedules of table H94–8 of this section for model years 1994 through 1997 and from the implementation schedules of table H94–11 of this section for model years 1995 and 1996. For small volume manufacturers, Tier 0 standards of tables H94–9 and H94–10 continue to apply until model year 1998 and the Tier 0 standards of tables H94–12 and H94–13 continue to apply until model year 1997, when one hundred percent compliance with the Tier 1 standards of such tables is required. This exemption does not apply to small volume engine families as defined in § 86.092–14 (b)(5).

(*2*)(*i*) For 1994 and 1995 model year light light-duty trucks, the engine families which comprise the required implementation schedule percentage of sales meeting Tier 1 standards for HCs, CO, and NO_X, for purposes of certification, shall be the same engine families which comprise the required implementation schedule percentage of sales meeting the interim in-use standards (labeled ''Tier 1_I'' in the tables of in-use standards) for in-use purposes.

(*ii*) For 1996 and 1997 model year light light-duty trucks, the engine families which comprise the required implementation schedule percentage of sales meeting interim in-use standards (labeled ''Tier 1_I'' in the tables of in-use standards) and final in-use standards (labeled ''Tier 1'' in the tables of in-use standards) respectively, for HCs, CO, and NO_X, for in-use purposes, shall be designated by the manufacturer at the time of certification.

(*iii*) For 1995 and 1996 model year light light-duty trucks, the engine families which comprise the required implementation schedule percentage of sales meeting Tier 1 standards, for PM, for purposes of certification, shall be the same engine families which comprise the required implementation schedule percentage of sales meeting the final in-use standards (labeled ''Tier 1'' in the tables of in-use standards) for PM for in-use purposes.

(*3*) The manufacturer must state at the time of Application for Certification, based on projected U.S. sales or projected production for U.S. sale, which families will be used to attain the required implementation schedule sales percentages for in-use purposes.

(*4*) A manufacturer can not use one set of engine families to meet its in-use intermediate useful life standards and another to meet its in-use full useful life standards. The same families which are used to meet the intermediate useful life standards will be required without deviation to meet the corresponding full useful life standards.

(ii) *Heavy light-duty trucks.* In-use exhaust emissions from 1994 and later model year heavy light-duty trucks shall meet all standards in tables H94–15 and H94–16 in the rows designated with the applicable fuel type and loaded vehicle weight or adjusted loaded vehicle weight, as applicable, according to the implementation schedule in table H94–14, and shall meet all standards in tables H94–18 and H94–19 in the rows designated with the applicable fuel type and loaded vehicle weight or adjusted loaded vehicle weight, as applicable, according to the implementation schedules in table H94–17, as follows:

(A)(*1*)(*i*) For model years 1994 through 1997, a minimum of the percentage shown in the Tier 1_I column of table H94–14 of a manufacturer's sales of the applicable model year's heavy light-duty trucks shall not exceed the applicable Tier 1_I standards in tables H94–15 and H94–16. The remaining vehicles, if any, shall not exceed the applicable Tier 0 standards in tables H94–15 and H94–16.

(*ii*) For model year 1998, a minimum of the percentage shown in table H94–14 of a manufacturer's sales of the applicable model year's heavy light-duty trucks shall not exceed the applicable Tier 1 standards in tables H94–15 and H94–16. The remaining vehicles shall not exceed the applicable Tier 1_I standards in tables H94–15 and H94–16.

(*iii*) For model years 1999 and later, a minimum of the percentage shown in table H94–14 of a manufacturer's sales of the applicable model year's heavy light-duty trucks shall not exceed the

applicable Tier 1 standards in tables H94–15 and H94–16.

(2) *Particulates*. For in-use exhaust emissions for model year 1994 and later, a minimum of the percentage shown in table H94–17 of a manufacturer's sales of the applicable model year's heavy light-duty trucks shall not exceed the applicable Tier 1 standards in tables H94–18 and H94–19. The remaining heavy light-duty trucks, if any, shall not exceed the applicable Tier 0 standards in tables H94–18 and H94–19.

TABLE H94–14—IMPLEMENTATION SCHEDULE FOR HEAVY LIGHT-DUTY TRUCKS FOR HCS, CO AND NO_X

Model year	Tier 1_I percentage	Tier 1 percentage
1994	0%	0%
1995	0%	0%
1996	50%	0%
1997	100%	0%
1998	50%	50%
after 1998	0%	100%

TABLE H94–15—INTERMEDIATE USEFUL LIFE[1] STANDARDS (G/MI) FOR HEAVY LIGHT-DUTY TRUCKS FOR HCS, CO AND NO_X

Fuel	LVW (lbs)	ALVW (lbs)	Standards	THC	NMHC	THCE	NMHCE	CO	NO_X
Gasoline	0–3750		Tier 0	0.80				10	1.2
Gasoline	>3750		Tier 0	0.80				10	1.7
Gasoline		3751–5750	Tier 1_I	0.80	0.40			5.5	0.88
Gasoline		3751–5750	Tier 1	0.80	0.32			4.4	0.7
Gasoline		>5750	Tier 1_I	0.80	0.49			6.2	1.38
Gasoline		>5750	Tier 1	0.80	0.39			5.0	1.1
Diesel	0–3750		Tier 0	0.80				10	1.2
Diesel	>3750		Tier 0	0.80				10	1.7
Diesel	0–3750	3751–5750	Tier 1_I	0.80	0.40			5.5	1.2
Diesel	>3750	3751–5750	Tier 1_I	0.80	0.40			5.5	1.7
Diesel		3751–5750	Tier 1	0.80	0.32			4.4	0.98
Diesel	0–3750	>5750	Tier 1_I	0.80	0.49			6.2	1.2
Diesel	>3750	>5750	Tier 1_I	0.80	0.49			6.2	1.7
Diesel		>5750	Tier 1	0.80	0.39			5.0	1.53
Methanol	0–3750		Tier 0	0.80				10	1.2
Methanol	>3750		Tier 0	0.80				10	1.7
Methanol		3751–5750	Tier 1_I			0.80	0.40	5.5	0.88
Methanol		3751–5750	Tier 1			0.80	0.32	4.4	0.7
Methanol		>5750	Tier 1_I			0.80	0.49	6.2	1.38
Methanol		>5750	Tier 1			0.80	0.39	5.0	1.1
Natural Gas	0–3570		Tier 0		0.67			10	1.2
Natural Gas	>3750		Tier 0		0.67			10	1.7
Natural Gas		3751–5750	Tier 1_I		0.40			5.5	0.88
Natural Gas		3751–5750	Tier 1		0.32			4.4	0.7
Natural Gas		>5750	Tier 1_I		0.49			6.2	1.38
Natural Gas		>5750	Tier 1		0.39			5.0	1.1
LPG	0–3570		Tier 0	0.80				10	1.2
LPG	>3750		Tier 0	0.80				10	1.7
LPG		3751–5750	Tier 1_I	0.80	0.40			5.5	0.88
LPG		3751–5750	Tier 1	0.80	0.32			4.4	0.7
LPG		>5750	Tier 1_I	0.80	0.49			6.2	1.38
LPG		>5750	Tier 1	0.80	0.39			5.0	1.1

[1] The applicable useful life is 5 years or 50,000 miles, whichever first occurs.

TABLE H94–16—FULL USEFUL LIFE STANDARDS (G/MI) FOR HEAVY LIGHT-DUTY TRUCKS FOR HCS, CO AND NO_X

Fuel	LVW (lbs)	ALVW (lbs)	Standards	THC [2]	NMHC [1]	THCE [2]	NMHCE [1]	CO [1]	NO_X [1]
Gasoline	0–3750		Tier 0	0.80				10	1.2
Gasoline	>3750		Tier 0	0.80				10	1.7
Gasoline		3751–5750	Tier 1	0.80	0.46			6.4	0.98
Gasoline		>5750	Tier 1	0.80	0.56			7.3	1.53
Diesel	0–3750		Tier 0	0.80				10	1.2
Diesel	>3750		Tier 0	0.80				10	1.7
Diesel		3751–5750	Tier 1	0.80	0.46			6.4	0.98
Diesel		>5750	Tier 1	0.80	0.56			7.3	1.53
Methanol	0–3750		Tier 0			0.80		10	1.2
Methanol	>3750		Tier 0			0.80		10	1.7
Methanol		3751–5750	Tier 1			0.80	0.46	6.4	0.98
Methanol		>5750	Tier 1			0.80	0.56	7.3	1.53
Natural Gas	0–3750		Tier 0		0.67			10	1.2
Natural Gas	>3750		Tier 0		0.67			10	1.7
Natural Gas		3751–5750	Tier 1		0.46			6.4	0.98
Natural Gas		>5750	Tier 1		0.56			7.3	1.53
LPG	0–3750		Tier 0	0.80				10	1.2
LPG	>3750		Tier 0	0.80				10	1.7
LPG		3751–5750	Tier 1	0.80	0.46			6.4	0.98
LPG		>5750	Tier 1	0.80	0.56			7.3	1.53

[1] The applicable useful life is 11 years or 120,000 miles, whichever first occurs, except that no enforcement testing will be done beyond 7 years or 90,000 miles, whichever first occurs.
[2] The applicable useful life is 11 years or 120,000 miles, whichever first occurs.

TABLE H94–17—IMPLEMENTATION SCHEDULE FOR HEAVY LIGHT-DUTY TRUCKS FOR PM

Model year	Tier 1 percentage
1994	0
1995	0
1996	50
after 1996	100

TABLE H94–18—INTERMEDIATE USEFUL LIFE [1] STANDARDS (G/MI) FOR HEAVY LIGHT-DUTY TRUCKS FOR PM

Fuel	LVW (lbs)	ALVW (lbs)	Standards	PM
Gasoline	0–3750		Tier 0	
Gasoline	>3750		Tier 0	
Gasoline		3751–5750	Tier 1	0.10
Gasoline		>5750	Tier 1	0.12
Diesel	0–3750		Tier 0	0.26
Diesel	>3750		Tier 0	0.13
Diesel		3751–5750	Tier 1	0.10
Diesel		>5750	Tier 1	0.12
Methanol	0–3750		Tier 0	
Methanol	>3750		Tier 0	
Methanol		3751–5750	Tier 1	0.10
Methanol		>5750	Tier 1	0.12
Natural Gas	0–3750		Tier 0	[2] 0.26
Natural Gas	>3750		Tier 0	[2] 0.13
Natural Gas		3751–5750	Tier 1	0.10
Natural Gas		>5750	Tier 1	0.12
LPG	0–3750		Tier 0	[2] 0.26
LPG	>3750		Tier 0	[2] 0.13
LPG		3751–5750	Tier 1	0.10
LPG		>5750	Tier 1	0.12

[1] The applicable useful life is 5 years or 50,000 miles, whichever first occurs.
[2] Applicable only to diesel-cycle vehicles.

TABLE H94–19—FULL USEFUL LIFE [1] STANDARDS (G/MI) FOR HEAVY LIGHT-DUTY TRUCKS FOR PM

Fuel	LVW (lbs)	ALVW (lbs)	Standards	PM
Gasoline	0–3750		Tier 0	
Gasoline	>3750		Tier 0	
Gasoline		3751–5750	Tier 1	0.10
Gasoline		>5750	Tier 1	0.12
Diesel	0–3750		Tier 0	0.26
Diesel	>3750		Tier 0	0.13
Diesel		3751–5750	Tier 1	0.10
Diesel		>5750	Tier 1	0.12
Methanol	0–3750		Tier 0	
Methanol	>3750		Tier 0	
Methanol		3751–5750	Tier 1	0.10
Methanol		>5750	Tier 1	0.12

[1] The applicable useful life is 11 years or 120,000 miles, whichever first occurs, except that no enforcement testing will be done beyond 7 years or 90,000 miles, whichever first occurs.

(B)(*1*)(*i*) Sales percentages for the purposes of determining compliance with paragraph (a)(1)(ii)(A) of this section shall be based on total actual U.S. sales of light-duty vehicles of the applicable model year by a manufacturer to a dealer, distributor, fleet operator, broker, or any other entity which comprises the point of first sale.

(*ii*) The manufacturer may petition the Administrator to allow actual volume produced for U.S. sales to be used in lieu of actual U.S. sales for purposes of determining compliance with the implementation schedule sales percentages of tables H94–14 and H94–17 of this section. Such petition shall be submitted within 30 days of the end of the model year to the Manufacturers Operations Division. For the petition to be granted, the manufacturer must establish to the satisfaction of the Administrator that actual production volume is functionally equivalent to actual sales volume.

(*iii*) The vehicles that are counted toward the implementation schedule sales percentage, or toward the total on which such percentage is based, for certification purposes as prescribed by § 86.094–9(a)(1)(ii)(B)(*1*)(*iii*) of subpart A of this part, shall be the same vehicles that are counted toward the implementation schedule sales percentage, or the total on which it is based, for in-use purposes.

(*iv*) Small volume manufacturers, as defined in § 86.092–14(b) (1) and (2), are exempt from the implementation schedules of tables H94–14 of this section for model years 1996 through 1998 and from the implementation schedules of table H94–17 of this section for model year 1996. For small volume manufacturers, Tier 0 standards of tables H94–15 and H94–16 continue to apply until model year 1999 and the Tier 0 standards of tables H94–18 and H94–19 continue to apply until model year 1997, when one hundred percent compliance with the Tier 1 standards of such tables is required. This exemption does not apply to small volume engine families as defined in § 86.092–14(b)(5).

(*2*)(*i*) For 1996 and 1997 model year heavy light-duty trucks, the engine families which comprise the required implementation schedule percentage of sales meeting Tier 1 standards for HCs, CO, and NO_X, for purposes of certification, shall be the same engine families which comprise the required implementation schedule percentage of sales meeting the interim in-use standards (labeled ''Tier 1_I'' in the tables of in-use standards) for in-use purposes.

(*ii*) For 1998 model year heavy light-duty trucks the engine families which comprise the required implementation schedule percentage of sales meeting interim in-use standards (labeled ''Tier 1_I'' in the tables of in-use standards) and final in-use standards (labeled ''Tier 1'' in the tables of in-use standards) for HCs, CO, and NO_X, for in-use purposes, shall be designated by the manufacturer at the time of certification.

(*iii*) For 1996 model year heavy light-duty trucks, the engine families which comprise the required implementation schedule percentage of sales meeting Tier 1 standards, for PM, for purposes

of certification, shall be the same engine families which comprise the required implementation schedule percentage of sales meeting the final in-use standards (labeled ''Tier 1'' in the tables of in-use standards) for PM for in-use purposes.

(*3*) The manufacturer must state at the time of Application for Certification, based on projected U.S. sales or projected production for U.S. sale, which families will be used to attain the required implementation schedule sales percentages.

(*4*) A manufacturer can not use one set of engine families to meet its in-use intermediate useful life standards and another to meet its in-use full useful life standards. The same families which are used to meet the intermediate useful life standards will be required without deviation to meet the corresponding full useful life standards.

(iii) Exhaust emissions of carbon monoxide from 1994 and later model year light-duty trucks shall not exceed 0.50 percent of exhaust gas flow at curb idle at a useful life of 11 years or 120,000 miles, whichever first occurs (for Otto-cycle and methanol-fueled diesel-cycle light-duty trucks only).

(iv)(A) Engine families participating in the applicable NO_X averaging program as specified in § 86.094–9(a)(1)(iv)(A) shall be subject, for purposes of in-use compliance, to the NO_X family emission limit determined for that engine family for certification purposes, in lieu of the appropriate NO_X standard shown in the tables of in-use standards in this section.

(B) Engine families participating in the applicable particulate averaging program as specified in § 86.094–9(a)(1)(iv)(B) shall be subject, for purposes of in-use compliance, to the particulate family emission limit determined for that engine family for certification purposes, in lieu of the appropriate particulate standard shown in the tables of in-use standards in this section.

(v) CST emissions from model year 1996 and later gasoline-fueled Otto-cycle light-duty trucks measured and calculated in accordance with subpart O of this part may not exceed the standards listed in paragraphs (a)(1)(v)(A) and (B) of this section.

(A) Hydrocarbons: 220 ppm as hexane.

(B) Carbon monoxide: 1.2 percent.

(2) The standards set forth in paragraphs (a)(1)(i) and (a)(1)(ii) of this section refer to the exhaust emitted over a driving schedule as set forth in subpart B of this part and measured and calculated in accordance with those procedures. The test weight basis for light light-duty trucks, and for heavy light-duty trucks certified to the Tier 0 standards of this section, for the purposes of determining equivalent test weight as prescribed in § 86.129–94, shall be loaded vehicle weight. The test weight basis for heavy light-duty trucks certified to the Tier 1 or Tier 1_I standards of this section, for the purposes of determining equivalent test weight as prescribed in § 86.129–94, shall be adjusted loaded vehicle weight. The standard set forth in paragraph (a)(1)(iii) of this section refers to the exhaust emitted at curb idle and measured and calculated in accordance with the procedures set forth in subpart P of this part.

(3) The standards set forth in paragraph (a)(1)(v) of this section refer to the exhaust emitted during the CST as set forth in subpart O of this part and measured and calculated in accordance with those provisions.

(b) The provision of § 86.090–8(b) through (k) of subpart A of this part apply to this section.

[56 FR 25781, June 5, 1991, as amended at 57 FR 31922, July 17, 1992; 58 FR 33211, June 16, 1993; 58 FR 58424, Nov. 1, 1993; 59 FR 48516, Sept. 21, 1994]

§ 86.709–99 In-use emission standards for 1999 and later model year light-duty trucks.

Section 86.709–99 includes text that specifies requirements that differ from § 86.091–9 of subpart A of this part. Where a paragraph in § 86.091–9 is identical and applicable to § 86.709–99, this may be indicated by specifying the corresponding paragraph and the statement ''[Reserved]. For guidance see § 86.091–9.'' Where a corresponding paragraph of § 86.091–9 is not applicable, this is indicated by the statement ''[Reserved].''

(a)(1)(i)(A) *Light light-duty trucks.* In-use exhaust emissions from 1999 and later model year light light-duty

trucks shall meet all standards in tables H99–1 and H99–2 in the rows designated with the applicable fuel type and loaded vehicle weight.

TABLE H99–1—INTERMEDIATE USEFUL LIFE [1] STANDARDS (G/MI) FOR LIGHT LIGHT-DUTY TRUCKS

Fuel	LVW (lbs)	THC	NMHC	THCE	NMHCE	CO	NO_X	PM
Gasoline	0–3750	.....	0.25	.....	.....	3.4	0.4	0.08
Gasoline	3751–5750	.....	0.32	.....	.....	4.4	0.7	0.08
Diesel	0–3750	.....	0.25	.....	.....	3.4	1.0	0.08
Diesel	3751–5750	.....	0.32	.....	.....	4.4	0.97	0.08
Methanol	0–3750	.....	.....	.....	0.25	3.4	0.4	0.08
Methanol	3751–5750	.....	.....	.....	0.32	4.4	0.7	0.08
Natural Gas	0–3750	.....	0.25	.....	.....	3.4	0.4	0.08
Natural Gas	3751–5750	.....	0.32	.....	.....	4.4	0.7	0.08
LPG	0–3750	.....	0.25	.....	.....	3.4	0.4	0.08
LPG	3751–5750	.....	0.32	.....	.....	4.4	0.7	0.08

[1] The applicable useful life is 5 years or 50,000 miles, whichever first occurs.

TABLE H99–2—FULL USEFUL LIFE STANDARDS (G/MI) FOR LIGHT LIGHT-DUTY TRUCKS

Fuel	LVW (lbs)	THC [2]	NMHC [1]	THCE [2]	NMHCE [1]	CO [1]	NO_X [1]	PM [1]
Gasoline	0–3750	0.80	0.31	.....	.....	4.2	0.6	0.10
Gasoline	3751–5750	0.80	0.40	.....	.....	5.5	0.97	0.10
Diesel	0–3750	0.80	0.31	.....	.....	4.2	1.25	0.10
Diesel	3751–5750	0.80	0.40	.....	.....	5.5	0.97	0.10
Methanol	0–3750	.....	.....	0.80	0.31	4.2	0.6	0.10
Methanol	3751–5750	.....	.....	0.80	0.40	5.5	0.97	0.10
Natural Gas	0–3750	.....	0.31	.....	.....	4.2	0.6	0.10
Natural Gas	3751–5750	.....	0.40	.....	.....	5.5	0.97	0.10
LPG	0–3750	0.80	0.31	.....	.....	4.2	0.6	0.10
LPG	3751–5750	0.80	0.40	.....	.....	5.5	0.97	0.10

[1] The applicable useful life is 10 yeras or 100,000 miles, whichever first occurs, except that no enforcement testing will be done beyond 7 years or 75,000 miles, whichever first occurs.
[2] The applicable useful life is 11 years or 120,000 miles, whichever first occurs.

(B)(*1*) Vehicles subject to the standards of paragraph (a)(1)(i)(A) of this section shall be all actual U.S. sales of light light-duty trucks of the applicable model year by a manufacturer.

(*2*) A manufacturer can not use one set of engine families to meet its in-use intermediate useful life standards and another to meet its in-use full useful life standards. The same families which are used to meet the intermediate useful life standards will be required without deviation to meet the corresponding full useful life standards.

(ii)(A) *Heavy light-duty trucks.* In-use exhaust emissions from 1999 and later model year heavy light-duty trucks shall meet all standards in tables H99–3 and H99–4 in the rows designated with the applicable fuel type and adjusted loaded vehicle weight.

TABLE H99–3—INTERMEDIATE USEFUL LIFE [1] STANDARDS (G/MI) FOR HEAVY LIGHT-DUTY TRUCKS

Fuel	ALVW (lbs)	THC	NMHC	THCE	NMHCE	CO	NO_X	PM
Gasoline	3751–5750	0.80	0.32	.....	.....	4.4	0.7	0.10
Gasoline	>5750	0.80	0.39	.....	.....	5.0	1.1	0.12
Diesel	3751–5750	0.80	0.32	.....	.....	4.4	0.98	0.10
Diesel	>5750	0.80	0.39	.....	.....	5.0	1.53	0.12
Methanol	3751–5750	.....	.....	0.80	0.32	4.4	0.7	0.10
Methanol	>5750	.....	.....	0.80	0.39	5.0	1.1	0.12
Natural Gas	3751–5750	.....	0.32	.....	.....	4.4	0.7	0.10
Natural Gas	>5750	.....	0.39	.....	.....	5.0	1.1	0.12
LPG	3751–5750	0.80	0.32	.....	.....	4.4	0.7	0.10
LPG	>5750	0.80	0.39	.....	.....	5.0	1.1	0.12

[1] The applicable useful life is 5 years or 50,000 miles, whichever first occurs.

TABLE H99–4—FULL USEFUL LIFE [1] STANDARDS (G/MI) FOR HEAVY LIGHT-DUTY TRUCKS

Fuel	ALVW (lbs)	THC [2]	NMHC [1]	THCE [2]	NMHCE [1]	CO [1]	NO_x [1]	PM [1]
Gasoline	3751–5750	0.80	0.46	.....	.....	6.4	0.98	0.10
Gasoline	>5750	0.80	0.56	.....	.....	7.3	1.53	0.12
Diesel	3751–5750	0.80	0.46	.....	.....	6.4	0.98	0.10
Diesel	>5750	0.80	0.56	.....	.....	7.3	1.53	0.12
Methanol	3751–5750	.....	.....	0.80	0.46	6.4	0.98	0.10
Methanol	>5750	.....	.....	0.80	0.56	7.3	1.53	0.12
Natural Gas	3751–5750	.....	0.46	.....	.....	6.4	0.98	0.10
Natural Gas	>5750	.....	0.56	.....	.....	7.3	1.53	0.12
LPG	3751–5750	0.80	0.46	.....	.....	6.4	0.98	0.10
LPG	>5750	0.80	0.56	.....	.....	7.3	1.53	0.12

[1] The applicable useful life is 11 years or 120,000 miles, whichever first occurs, except that no enforcement testing will be done beyond 7 years or 90,000 miles, whichever first occurs.
[2] The applicable useful life is 11 years or 120,000 miles, whichever first occurs.

(B)(*1*) Vehicles subject to the standards of paragraph (a)(1)(ii)(A) of this section shall be all actual U.S. sales of heavy light-duty trucks of the applicable model year by a manufacturer.

(*2*) A manufacturer can not use one set of engine families to meet its in-use intermediate useful life standards and another to meet its in-use full useful life standards. The same families which are used to meet the intermediate useful life standards will be required without deviation to meet the corresponding full useful life standards.

(iii) Exhaust emissions of carbon monoxide from 1999 and later model year light-duty trucks shall not exceed 0.50 percent of exhaust gas flow at curb idle at a useful life of 11 years or 120,000 miles, whichever first occurs (for Otto-cycle and methanol-fueled diesel-cycle light-duty trucks only)

(iv) CST emissions from gasoline-fueled Otto-cycle light-duty trucks measured and calculated in accordance with subpart O of this part may not exceed the standards listed in paragraphs (a)(1)(iv) (A) and (B) of this section.

(A) Hydrocarbons: 220 ppm as hexane.

(B) Carbon monoxide: 1.2 percent.

(2) The standards set forth in paragraphs (a)(1)(i) and (a)(1)(ii) of this section refer to the exhaust emitted over a driving schedule as set forth in subpart B of this part and measured and calculated in accordance with those procedures. The test weight basis for light light-duty trucks, for the purposes of determining equivalent test weight as prescribed in § 86.129–94, shall be loaded vehicle weight. The test weight basis for heavy light-duty trucks, for the purposes of determining equivalent test weight as prescribed in § 86.129–94, shall be adjusted loaded vehicle weight. The standard set forth in paragraph (a)(1)(iii) of this section refers to the exhaust emitted at curb idle and measured and calculated in accordance with the procedures set forth in subpart P of this part.

(3) The standards set forth in paragraph (a)(1)(iv) of this section refer to the exhaust emitted during the CST as set forth in subpart O of this part and measured and calculated in accordance with those provisions.

(b) The provisions of § 86.097–9(b), (c), and (g) through (k) of subpart A of this part apply to this section.

[56 FR 25781, June 5, 1991, as amended at 57 FR 31922, July 17, 1992; 58 FR 58425, Nov. 1, 1993; 59 FR 48520, Sept. 21, 1994]

Subpart I—Emission Regulations for New Diesel Heavy-Duty Engines; Smoke Exhaust Test Procedure

AUTHORITY: Secs. 202, 206, 207, 208, 301(a), Clean Air Act; as amended 42 U.S.C. 7521, 7524, 7541, 7542, and 7601.

SOURCE: 48 FR 52203, Nov. 16, 1983, unless otherwise noted.

§ 86.884–1 General applicability.

The provisions of this subpart are applicable to new petroleum-fueled diesel heavy-duty engines beginning with the 1984 model year, methanol-fueled diesel heavy-duty engines beginning with the 1990 model year and natural gas-fueled and liquefied petroleum gas-fueled diesel heavy-duty engines beginning with the 1997 model year. The provisions of this subpart are optional prior to the

1997 model year for natural gas-fueled and liquefied petroleum gas-fueled diesel heavy-duty engines.

[59 FR 48521, Sept. 21, 1994]

§ 86.884–2 Definitions.

The definitions in § 86.084–2 apply to this subpart.

§ 86.884–3 Abbreviations.

The abbreviations in § 86.078–3 apply to this subpart.

§ 86.884–4 Section numbering.

The section numbering system set forth in § 86.084–4 applies to this subpart.

[48 FR 52203, Nov. 16, 1983, as amended at 59 FR 48521, Sept. 21, 1994]

§ 86.884–5 Test procedures.

The procedures described in this and subsequent sections will be the test program to determine the conformity of engines with the standards set forth in § 86.084–11(b).

(a) The test consists of a prescribed sequence of engine operating conditions on an engine dynamometer with continuous examination of the exhaust gases. The test is applicable equally to controlled engines equipped with means for preventing, controlling, or eliminating smoke emissions and to uncontrolled engines.

(b) The test is designed to determine the opacity of smoke in exhaust emissions during those engine operating conditions which tend to promote smoke from diesel vehicles.

(c) The test procedure begins with a preconditioned engine which is then run through preloading and preconditioning operations. After an idling period, the engine is operated through acceleration and lugging modes during which smoke emission measurements are made to compare with the standards. The engine is then returned to the idle condition and the acceleration and lugging modes are repeated. Three consecutive sequences of acceleration and lugging constitutes the full set of operating conditions for smoke emission measurement.

(d)(1) Except in cases of component mulfunction or failure, all emission control systems installed on, or incorporated in, a new motor vehicle engine shall be functioning during all procedures in this subpart.

(2) Maintenance to correct component malfunction or failure shall be authorized in accordance with § 86.084–25.

[48 FR 52203, Nov. 16, 1983, as amended at 49 FR 48140, Dec. 10, 1984; 54 FR 14559, Apr. 11, 1989]

§ 86.884–6 Fuel specifications.

The requirements of this section are set forth in § 86.1313.

[54 FR 14559, Apr. 11, 1989]

§ 86.884–7 Dynamometer operation cycle for smoke emission tests.

(a) The following sequence of operations shall be performed during engine dynamometer testing of smoke emissions, starting with the dynamometer preloading determined and the engine preconditioned (§ 86.884–12(c)).

(1) *Idle Mode*. The engine is caused to idle for 5.0 to 5.5 minutes at the manufacturer's recommended curb idle speed. The dynamometer controls shall be set to provide the speed and load necessary to comply with the heavy-duty ''curb idle'' definition per § 86.084–2, in accordance with predominant engine application.

(2) *Acceleration mode*. (i) The engine speed shall be increased to 200 ±50 rpm above the measured free idle speed measured at the point where the throttle begins to move from part-throttle to the full throttle position. The speed anywhere during this mode should not exceed this checkpoint speed by more than 50 rpm. The duration of this first acceleration shall be three seconds or less measured from the point where the speed first begins to increase above idle to the point where the throttle reaches full open position.

(ii) Immediately upon completion of the mode specified in paragraph (a)(2)(i) of this section, the throttle shall be moved rapidly to, and held in, the fully open position. The inertia of the engine and the dynamometer, or alternately a preselected dynamometer load, shall be used to control the acceleration of the engine so that the speed increases to 85 percent of the rated

speed in 5 ±1.5 seconds. This acceleration shall be linear within 100 rpm as specified in § 86.884–13(c).

(iii) After the engine reaches the speed required in paragraph (a)(2)(ii) of this section the throttle shall be moved rapidly to, and held in, the fully closed position. Immediately after the throttle is closed, the preselected load required to perform the acceleration in paragraph (a)(2)(iv) of this section shall be applied. For electric motoring dynamometer operation in speed mode, the deceleration shall be performed in 2±1.5 seconds.

(iv) When the engine decelerates to the intermediate speed (within 50 rpm), the throttle shall be moved rapidly to, and held in, the fully open position. The preselected dynamometer load which was applied during the preceding transition period shall be used to control the acceleration of the engine so that the speed increases to at least 95 percent of the rated speed in 10 ±2 seconds.

(v) For electric dynamometer operation in speed mode, motoring assist may be used to offset excessive dynamometer inertia load when necessary. No negative flywheel torque shall occur during any of the three acceleration modes in paragraph (a)(2) of this section except for a maximum of 10ft-lbs. for the first 0.5 second of the mode.

(3) *Lugging mode.* (i) Immediately upon the completion of the preceding acceleration mode, the dynamometer controls shall be adjusted to permit the engine to develop maximum horsepower at rated speed. This transition period shall be 50 to 60 seconds in duration. During the last 10 seconds of this period, the average engine speed shall be maintained within 50 rpm of the rated speed, and the average observed power (corrected, if necessary, to rating conditions) shall be no less than 95 percent of the maximum horsepower developed during the preconditioning prior to the smoke cycle.

(ii) With the throttle remaining in the fully open position, the dynamometer controls shall be adjusted gradually so that the engine speed is reduced to the intermediate speed. This lugging operation shall be performed smoothly over a period of 35#5 seconds. The rate of slowing of the engine shall be linear, within 100 rpm, as specified in § 86.884–13(c).

(4) *Engine unloading.* Within five seconds of completing the preceding lugging mode, the dynamometer and engine controls shall be returned to the idle position described in paragraph (a)(1) of this section. The engine must be at free idle condition within one minute after completion of the lugging mode.

(b) The procedures described in paragraphs (a)(1) through (a)(4) of this section shall be repeated until three consecutive valid cycles have been completed. If three valid cycles have not been completed after a total of six consecutive cycles have been run, the engine shall be preconditioned by operation at maximum horsepower at rated speed for 10 minutes before the test sequence is repeated.

[48 FR 52203, Nov. 16, 1983, as amended at 49 FR 48141, Dec. 10, 1984; 52 FR 47870, Dec. 16, 1987; 62 FR 47122, Sept. 5, 1997]

§ 86.884–8 Dynamometer and engine equipment.

The following equipment shall be used for smoke emission testing of engines on engine dynamometers:

(a) An engine dynamometer with adequate characteristics to perform the test cycle described in §86.884–7.

(b) An engine cooling system having sufficient capacity to maintain the engine at normal operating temperatures during conduct of the prescribed engine tests.

(c) An exhaust system with an appropriate type of smokemeter placed no more than 32 feet from the exhaust manifold(s), turbocharger outlet(s), exhaust aftertreatment device(s), or crossover junction (on Vee engines), whichever is farthest downstream. The smoke exhaust system shall present an exhaust backpressure within ±0.2 inch Hg of the upper limit at maximum rated horsepower, as established by the engine manufacturer in his sales and service literature for vehicle application. The following options may also be used:

(1) For engines with multiple exhaust outlets, join the exhaust outlets together into a single exhaust system and install the smokemeter 10 to 32 feet downstream from the junction of

the individual exhaust outlets, or exhaust aftertreatment device(s), whichever is farthest downstream.

(2) For engines with multiple exhaust outlets, install a smokemeter in each of the exhaust pipes 10 to 32 feet downstream from each exhaust manifold, turbocharger outlet, or exhaust aftertreatment device, whichever is farthest downstream.

(3) For engines with multiple exhaust outlets, install a smokemeter on the exhaust pipe which produces the highest smoke levels 10 to 32 feet downstream from the exhaust manifold, turbocharger outlet, or exhaust aftertreatment device, whichever is farthest downstream. It may be required to make smoke measurements from other exhaust outlets if deemed appropriate by the Administrator.

(4) When utilizing an end-of-line smokemeter, the terminal two feet of the exhaust pipe used for smoke measurement shall be of a circular cross section and be free of elbows and bends. The end of the pipe shall be cut off squarely. The terminal two feet of the exhaust pipe shall have a nominal inside diameter in accordance with the engine being tested, as specified below:

Maximum rated horsepower	Exhaust pipe diameter (inches)
HP<50	1.5
50≤HP<100	2.0
100≤HP<200	3.0
200≤HP<300	4.0
300≤HP<500	5.0
HP≥500	6.0

(5) When utilizing an in-line smokemeter, there shall be no change in the exhaust pipe diameter within 3 exhaust pipe diameters before or after the centerline of the smokemeter optics. Within 6 exhaust pipe diameters upstream of the centerline of the smokemeter optics, no change in exhaust pipe diameter may exceed a 12 degree half-angle.

(d) An engine air inlet system presenting an air inlet restriction within one inch of water of the upper limit for the engine operating condition which results in maximum air flow, as established by the engine manufacturer in his sales and service literature, for the engine being tested.

[48 FR 52203, Nov. 16, 1983, as amended at 62 FR 47122, Sept. 5, 1997; 63 FR 63967, Nov. 17, 1998; 70 FR 40437, July 13, 2005]

§ 86.884–9 Smoke measurement system.

(a) *Schematic drawing*. The Figure I84–1 is a schematic drawing of the optical system of the light extinction meter.

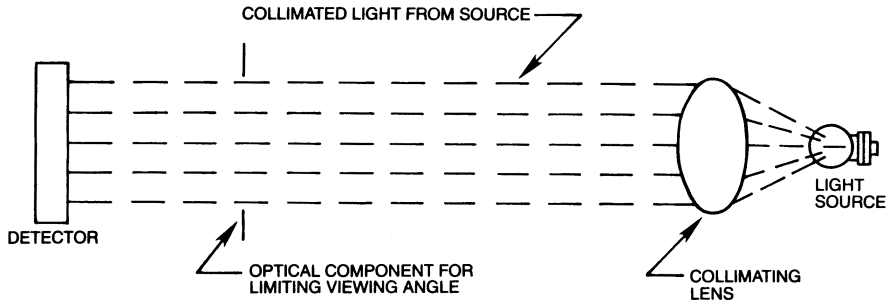

Figure I84-1 SMOKEMETER OPTICAL SYSTEM (SCHEMATIC)

(b) *Equipment*. The following equipment shall be used in the system.

(1) Adapter—the smokemeter optical unit may be mounted on a fixed or

movable frame. The normal unrestricted shape of the exhaust plume shall not be modified by the adaptor, the meter, or any ventilatory system used to remove the exhaust from the test site.

(2) Smokemeter (light extinction meter)—continuous recording, full-flow light obscuration meter.

(i) It is positioned so that a built-in light beam traverses the exhaust smoke plume at right angles to the axis of the exhaust stream.

(ii) The smokemeter light source shall be an incandescent lamp with a color temperature range of 2800K to 3250K, or a light source with a spectral peak between 550 to 570 nanometers.

(iii) The light output is collimated to a beam with a maximum diameter of 1.125 inches and an included angle of divergence within a 6° included angle.

(iv) The light detector shall be a photocell or photodiode. If the light source is an incandescent lamp, the detector shall have a spectral response similar to the photopic curve of the human eye (a maximum response in the range of 550 to 570 nanometers, to less than 4 percent of that maximum response below 430 nanometers and above 680 nanometers).

(v) A collimating tube with apertures equal to the beam diameter is attached to the detector to restrict the viewing angle of the detector to within a 16° included angle.

(vi) An amplified signal corresponding to the amount of light blocked is recorded continuously on a remote recorder.

(vii) An air curtain across the light source and detector window assemblies may be used to minimize deposition of smoke particles on those surfaces provided that it does not measurably affect the opacity of the plume.

(viii) The smokemeter consists of two units; an optical unit and a remote control unit.

(ix) Light extinction meters employing substantially identical measurement principles and producing substantially equivalent results, but which employ other electronic and optical techniques, may be used only after having been approved in advance by the Administrator.

(3) Recorder—a continuous recorder, with variable chart speed over a minimal range of 0.5 to 8.0 inches per minute (or equivalent) and an automatic marker indicating 1-second intervals continuously records the exhaust gas opacity, engine rpm and throttle position.

(i) The recorder is equipped to indicate only when the throttle is in the fully open or fully closed position.

(ii) The recorder scale for opacity is linear and calibrated to read from 0 to 100 percent opacity full scale.

(iii) The opacity trace has a resolution within one percent opacity.

(iv) The recorder scale for engine rpm is linear and has a resolution of 30 rpm.

(v) The throttle position trace clearly indicates when the throttle is in the fully open and fully closed positions.

(vi) Any means other than a strip-chart recorder may be used provided it produces a permanent visual data record of quality equal to or better than that described above (e.g., tabulated data, traces, or plots).

(4) The recorder used with the smokemeter shall be capable of full-scale deflection in 0.5 second or less. The smokemeter-recorder combination may be damped so that signals with a frequency higher than 10 cycles per second are attenuated. A separate lowpass electronic filter with the following performance characteristics may be installed between the smokemeter and the recorder to achieve the high-frequency attenuation:

(i) Three decibel point—10 cycles per second.

(ii) Insertion loss—zero ±0.5 decibel.

(iii) Selectivity—12 decibels per octave above 10 cycles per second.

(iv) Attenuation—27 decibels down at 40 cycles per second minimum.

(5) In lieu of the use of chart recorders, automatic data collection equipment may be used to record all required data. Automatic data processing equipment may then be used to perform the data analysis specified in § 86.884–13. The automatic data collection equipment must be capable of sampling at least two records per second.

(c) *Assembling equipment.* (1) The optical unit of the smokemeter shall be mounted radially to the exhaust pipe

so that the measurement will be made at right angles to the axis of the exhaust plume. For an end-of-line smokemeter the distance from the optical centerline to the exhaust pipe outlet shall be 1 ±0.25 inch. The full flow of the exhaust stream shall be centered between the source and the detector apertures (or windows and lenses) and on the axis of the light beam.

(2) Power shall be supplied to the control unit of the smokemeter in time to allow at least 15 minutes for stabilization prior to testing.

[48 FR 52203, Nov. 16, 1983, as amended at 49 FR 48141, Dec. 10, 1984; 62 FR 47122, Sept. 5, 1997]

§ 86.884–10 Information.

The following information, as applicable, shall be recorded for each test:

(a) *Engine description and specifications.* A copy of the information specified in this paragraph must accompany each engine sent to the Administrator for compliance testing. If the engine is submitted to the Administrator for testing under subpart N of this part or 40 CFR part 1065, only the specified information need accompany the engine. The manufacturer need not record the information specified in this paragraph for each test if the information, with the exception of paragraphs (a)(3), (a)(12), and (a)(13) of this section, is included in the manufacturer's part I.

(1) Engine-system combination.

(2) Engine identification numbers.

(3) Number of hours of operation accumulated on engine.

(4) Rated maximum horsepower and torque.

(5) Maximum horsepower and torque speeds.

(6) Engine displacement.

(7) Governed speed.

(8) Idle rpm.

(9) Fuel consumption at maximum power and torque.

(10) Maximum air flow.

(11) Maximum and test air inlet restriction.

(12) Exhaust pipe diameter(s).

(13) Maximum exhaust system backpressure.

(b) *Test data; general.* This information may be recorded at any time between four hours prior to the test and four hours after the test.

(1) Engine-system combination.

(2) Engine identification numbers.

(3) Instrument operator.

(4) Engine operator.

(5) Number of hours of operation accumulated on the engine prior to beginning the warm-up portion of the test.

(6) Calibration date(s) of neutral density filters used to calibrate the smokemeter.

(c) Test data; pre-test.

(1) Date and time of day.

(2) Test number.

(3) Barometric pressure.

(4) [Reserved]

(5) Intake air humidity and temperature:

(i) *Humidity-conditioned air supply.* Air that has had its absolute humidity altered is considered humidity-conditioned air. For this type of intake air supply, the humidity measurement must be made within the intake air supply system, and after the humidity conditioning has taken place.

(ii) *Non-conditioned air supply.* Humidity measurements in non-conditioned intake air supply systems must be made in the intake air stream entering the supply system and within 18 inches of the inlet for supply system. Alternatively, the humidity measurements can be measured within the intake air supply stream.

(iii) Engine intake air temperature measurement must be made within 48 inches of the engine. The measurement location must be made either in the supply system or in the air stream entering the supply system.

(d) *Test data; modal.* (1) Observed engine torque and speed during the steady-state test conditions specified in § 86.884–7(a)(3)(i).

(2) On the recorder or automatic data collection equipment: Identify zero traces—calibration traces—idle traces (or printout of the zero and calibration values)—closed-throttle trace-open throttle trace—acceleration and lugdown test traces—start and finish of each test.

[48 FR 52203, Nov. 16, 1983, as amended at 49 FR 48141, Dec. 10, 1984; 62 FR 47123, Sept. 5, 1997; 70 FR 40437, July 13, 2005]

§ 86.884–11 Instrument checks.

(a) The smokemeter shall be checked according to the following procedure prior to each test:

(1) [Reserved]

(2) The zero control shall be adjusted under conditions of ''no smoke'' to give a recorder or data collection equipment response of zero;

(3) Calibrated neutral density filters having approximately 10, 20, and 40 percent opacity shall be employed to check the linearity of the instrument. The filter(s) shall be inserted in the light path perpendicular to the axis of the beam and adjacent to the opening from which the beam of light from the light source emanates, and the recorder response shall be noted. Filters with exposed filtering media should be checked for opacity every six months; all other filters shall be checked every year, using NBS or equivalent reference filters. Deviations in excess of 1 percent of the nominal opacity shall be corrected.

(b) The instruments for measuring and recording engine rpm, engine torque, air inlet restrictions, exhaust system backpressure, throttle position, etc., which are used in the test prescribed herein, shall be calibrated in accordance with good engineering practice.

[48 FR 52203, Nov. 16, 1983, as amended at 49 FR 48141, Dec. 10, 1984]

§ 86.884–12 Test run.

(a) The temperature of the air supplied to the engine shall be between 68 °F and 86 °F. The engine fuel inlet temperature shall be 100 °F ±10 °F and shall be measured at a point specified by the manufacturer. The observed barometric pressure shall be between 28.5 inches and 31 inches Hg. Higher air temperature or lower barometric pressure may be used, if desired, but no allowance will be made for possible increased smoke emissions because of such conditions.

(b) The governor and fuel system shall have been adjusted to provide engine performance at the levels in the application for certification required under § 86.084–21.

(c) The following steps shall be taken for each test:

(1) Start cooling system;

(2) Warm up the engine by the procedure described in 40 CFR 1065.530.

(3) Determine by experimentation the dynamometer inertia and dynamometer load required to perform the acceleration in the dynamometer cycle for smoke emission tests (§ 86.884–7(a)(2)). In a manner appropriate for the dynamometer and controls being used, arrange to conduct the acceleration mode;

(4) Install smokemeter optical unit and connect it to the recorder/data collection system. Connect the engine rpm and throttle position sensing devices to the recorder/data collection system;

(5) Turn on purge air to the optical unit of the smokemeter, if purge air is used;

(6) Check and record zero and span settings of the smokemeter. (If a recorder is used, a chart speed of approximately one inch per minute shall be used.) The optical unit shall be retracted from its position about the exhaust stream if the engine is left running;

(7) Precondition the engine by operating it for 10 minutes at maximum rated horsepower;

(8) Proceed with the sequence of smoke emission measurements on the engine dynamometer as prescribed in § 86.884–7;

(9)(i) During the test sequence of § 86.884–7, continuously record smoke measurements, engine rpm, and throttle position.

(ii) If a chart recorder is used for data collection, it shall be run at a minimum chart speed of one inch per minute during the idle mode and transitional periods, and eight inches per minute during the acceleration and lugging modes.

(iii) Automatic data collection equipment, if used, shall sample at least two records per second.

(iv) The smoke meter zero and full scale response may be rechecked and reset during the idle mode of each test sequence.

(v) If either zero or full-scale drift is in excess of 2 percent opacity, the smokemeter controls must be readjusted and the test must be repeated;

(10) Turn off engine;

(11)(i) Check zero and reset if necessary.

(ii) Check span response (*linearity*) of the smokemeter by inserting neutral density filters.

(iii) If either zero drift *or the linearity check* is in excess of two percent opacity, the results shall be invalidated.

[48 FR 52203, Nov. 16, 1983, as amended at 49 FR 48141, Dec. 10, 1984; 52 FR 47870, Dec. 16, 1987; 70 FR 40437, July 13, 2005]

§ 86.884–13 Data analysis.

The following procedure shall be used to analyze the test data:

(a) Locate the modes specified in § 86.884–7(a)(1) through (a)(4) by applying the following starting and ending criteria:

(1) The idle mode specified in § 86.884–7(a)(1) starts when engine preconditioning or the lugging mode of a preceding cycle has been completed and ends when the engine speed is raised above the idle speed.

(2) The acceleration mode specified in § 86.884–7(a)(2)(i) starts when the preceding idle mode has been completed and ends when the throttle is in the fully open position, as indicated by the throttle position trace as specified in § 86.884–7(a)(2)(ii).

(3) The acceleration mode specified in § 86.884–7(a)(2)(ii) starts when the preceding acceleration mode has been completed and ends when the engine speed reaches 85 percent of the rated speed.

(4) The transition period specified in § 86.884–7(a)(2)(iii) starts when the preceding acceleration mode has been completed and ends when the throttle is in the fully open position as indicated by the throttle position trace, as specified in § 86.884–7(a)(2)(iv).

(5) The acceleration mode specified in § 86.884–7(a)(2)(iv) starts when the preceding transition period has been completed and ends when the engine speed reaches 95 percent of the rated speed.

(6) The transition period specified in § 86.884–7 (a)(3)(i) starts when the preceding acceleration mode has been completed and ends when the engine speed is 50 rpm below the rated speed and the provisions of § 86.884–7 (a)(3)(i) are met.

(7) The lugging mode specified in § 86.884–7(a)(3)(ii) starts when the preceding transition period has been completed and ends when the engine speed is at the intermediate speed.

(b) Determine if the test requirements of § 86.884–7 are met by applying the following modal criteria:

(1) Idle mode as specified in § 86.884–7(a)(1):

(i) Duration: 5 to 5.5 minutes.

(ii) Speed: within specification during the last four minutes of the mode.

(2) Acceleration mode as specified in § 86.884–7(a)(2)(i).

(i) Duration: three seconds or less.

(ii) Speed increase: 200±50 rpm.

(3) Acceleration mode as specified in § 86.884–7(a)(2)(ii);

(i) Linearity: ±100 rpm as specified in paragraph (c) of this section.

(ii) Duration: 3.5 to 6.5 seconds.

(iii) Throttle position: fully open until speed is at least 85 percent of the rated speed.

(4) Transition period as specified in § 86.884–7(a)(2)(iii):

(i) Throttle position: moved rapidly to, and held in, the fully closed position.

(5) Acceleration mode as specified in § 86.884–7(a)(2)(iv):

(i) Duration: 8 to 12 seconds.

(ii) Throttle position: fully open when speed is at intermediate speed.

(6) Transition period as specified in § 86.884–7(a)(3)(i):

(i) Duration: 50 to 60 seconds.

(ii) Average speed during the last 10 seconds shall be within ±50 rpm of rated speed.

(iii) Average observed power during the last 10 seconds shall be at least 95 percent of the horsepower developed during the preconditioning mode.

(7) Lugging mode as specified in § 86.884–7(a)(3)(ii):

(i) Linearity: ±100 rpm as specified in paragraph (c) of this section.

(ii) Duration: 30 to 40 seconds.

(iii) Speed at end: intermediate speed.

(c) Determine if the linearity requirements of § 86.884–7 were met by means of the following procedure:

(1) For the acceleration mode specified in § 86.884–7(a)(2)(ii), note the maximum deflection of the rpm trace from a straight line drawn between the starting and ending points specified in paragraph (a)(3) of this section.

(2) For the lugging mode specified in § 86.884–7(a)(3)(ii), note the maximum deflection of the rpm trace from a straight line drawn from the starting and ending points specified in paragraph (a)(7) of this section.

(3) The test results will be invalid if any deflection is greater than 100 rpm.

(4) This linearity check may be performed by direct analysis of the recorder traces, or by computer analysis of data collected by automatic data collection equipment.

(d) Analyze the smoke trace by means of the following procedure:

(1) Starting at the beginning of the first acceleration, as defined in paragraph (a)(2) of this section, and stopping at the end of the second acceleration, as defined in paragraph (a)(3) of this section, divide the smoke trace into half-second intervals. Similarly, subdivide into half-second intervals the third acceleration mode and the lugging mode as defined by paragraphs (a)(5) and (7) respectively, of this section.

(2) Determine the average smoke reading during each half-second interval.

(3) Locate and record the 15 highest half-second readings during the acceleration mode of each dynamometer cycle.

(4) Locate and record the five highest half-second readings during the lugging mode of each dynamometer cycle.

(5) Examine the average half-second values which were determined in paragraphs (d)(3) and (d)(4) of this section and record the three highest values for each dynamometer cycle.

(6) This smoke trace analysis may be performed by direct analysis of the recorder traces, or by computer analysis of data collected by automatic data collection equipment.

[48 FR 52203, Nov. 16, 1983, as amended at 49 FR 48141, Dec. 10, 1984; 62 FR 47123, Sept. 5, 1997]

§ 86.884–14 Calculations.

(a) If the measured half-second opacity values were obtained with a smokemeter with an optical path length different than shown in the table in § 86.884–8(c), then convert the measured half-second values or the original instantaneous values to the appropriate equivalent optical path length values specified in the table. Convert the opacity values according to the following equations:

$$N_s = 100 \times (1 - (1 - N_m / 100)^{L_s / L_m})$$

L_m and L_s must use consistent units in the above equation

Where:

N_m=Measured half-second value for conversion, percent opacity

L_m=Measuring smokemeter optical path length, meters

L_s=Standard optical path length corresponding with engine power, n

N_s=Standard half-second value, percent opacity

(b) Average the 45 readings in § 86.884–13(d)(3) or the equivalent converted values from paragraph (a) of this section if appropriate, and designate the value as ''A''. This is the value for the engine acceleration mode.

(c) Average the 15 readings in § 86.884–13(d)(4) or the equivalent converted values from paragraph (a) of this section if appropriate, and designate the value as ''B''. This is the value for the engine lugging mode.

(d) Average the 9 readings in § 86.884–13(d)(5) or the equivalent converted values from paragraph (a) of this section if appropriate, and designate the value as ''C''. This is the value for the peaks in either mode.

(e)(1) If multiple smokemeters were used, the half-second values for each mode from each smokemeter shall be combined and the calculated average based upon the total number of combined values.

(2) For example, if two smokemeters were used for acceleration mode data, 45 half-second values in each data set from both smokemeters would be combined to form a data set of 90 values, which would then be averaged.

[62 FR 47123, Sept. 5, 1997, as amended at 69 FR 2441, Jan. 15, 2004]

Subpart J—Fees for the Motor Vehicle and Engine Compliance Program

SOURCE: 57 FR 30055, July 7, 1992, unless otherwise noted.

§ 86.901–93 Abbreviations.

The abbreviations in this section apply to this subpart and have the following meanings:

CAFE—Corporate Average Fuel Economy,
Cal—California,
CPI—Consumer Price Index,
ESI—Engine System Information,
EPA—U.S. Environmental Protection Agency,
Fed—Federal,
HDE—Heavy-duty engine,
HDV—Heavy-duty vehicle,
ICI—Independent Commercial Importer,
LDV—Light-duty vehicle,
LDT—Light-duty truck,
MC—Motorcycle,
MVEPC—Motor Vehicle and Engine Compliance Program,
MY—Model Year,
OEM—Original equipment manufacturer,
SEA—Selective Enforcement Auditing.

§ 86.902–01 Definitions.

(a) The definitions in § 86.902–93 continue to apply to this subpart.

(b) The definitions in subparts A and S of this part apply to this subpart.

[64 FR 23922, May 4, 1999]

§ 86.902–93 Definitions.

California-only certificate is a Certificate of Conformity issued by EPA which only signifies compliance with the emission standards established by California.

Certification request means a manufacturer's request for certification evidence by the submission of an application for certification, ESI data sheet, or ICI Carryover data sheet.

Engine-system combination as defined in 40 CFR 86.082–2, means an engine family-exhaust emission control system combination.

Federal certificate is a Certificate of Conformity issued by EPA which signifies compliance with emission standards in 40 CFR part 86, subpart A.

Fuel economy basic engine means a unique combination of manufacturer, engine displacement, number of cylinders, fuel system, catalyst usage, and other characteristics specified by the Administrator.

Filing form means the MVECP Fee Filing Form to be sent with payment of the MVECP fee.

Signed means a certification request which results in a signed Certificate of Conformity.

Unsigned means a certification request which does not result in a signed Certificate of Conformity because it is either voluntarily withdrawn by the manufacturer or does not receive approval from the EPA.

§ 86.903–93 Applicability.

(a) This subpart prescribes fees to be charged for the MVECP for the 1993 through 2004 model year. The fees charged will apply to all manufacturers and ICIs of LDVs, LDTs, HDVs, HDEs, and MCs. Nothing in this subpart shall be construed to limit the Administrator's authority to require manufacturer or confirmatory testing as provided in the Clean Air Act, including authority to require manufacturer in-use testing as provided in section 208 of the Clean Air Act.

(b) The fee requirements of 40 CFR part 85, subpart Y for 2004 and later certification requests received on or after July 12, 2004 apply instead of the fees prescribed in this subpart.

(c) The fees prescribed in this subpart will only apply to those 2004 model year certification requests which are complete, include all data required by this title, and are received by the Agency prior to July 12, 2004.

[69 FR 26251, May 11, 2004]

§ 86.904–93 Section numbering; construction.

(a)(1) The MY of initial applicability is indicated by the section number. The two digits following the hyphen designate the first MY for which a section is effective. A section remains effective until superseded.

(2) *Example*. Section 86.901–93 applies to the 1993 and subsequent MYs until superseded. If § 86.901–96 is promulgated, it will take effect beginning with the 1996 MY; § 86.901–93 will apply to MYs 1993 through 1995.

(b)(1) A section reference without a MY suffix refers to the section applicable for the appropriate MY.

(2) *Example*. For a reference to § 86.901, one would refer to § 86.901–xx where xx is the last two digits of the model year in question.

§ 86.905–93 Purpose.

The MVECP includes all compliance, enforcement, and related activities performed by EPA which are associated with certification, fuel economy, SEA, and in-use compliance programs. The fee will recover those compliance, investigation and review costs which the EPA incurs in providing vehicle and engine manufacturers or ICIs with Certificates of Conformity, fuel economy labels, CAFE calculations, and ICI review necessary to market vehicles in the U.S. and to meet requirements otherwise imposed by statute.

§ 86.906–93 MVEPC certification request types.

Certification requests are grouped into three types corresponding to the three major divisions of regulated mobile sources: LDVs/LDTs; HDVs/HDEs; and MCs.

§ 86.907–01 Fee amounts.

The fee for each certification request type is:

Certificate type	Model year 2001 and later
LDV/LDT:	
Fed Signed	$27,211
Cal-only Signed	8,956
Fed Unsigned	2,738
Cal-only Unsigned	2,738
HDE/HDV:	
Fed Signed	12,584
Cal-only Signed	2,145
Fed Unsigned	2,145
Cal-only Unsigned	2,145
All Evaporative-only	2,145
Motorcycles:	
Fed Signed	840
Cal-only Signed	840
Fed Unsigned	840
Cal-only Unsigned	840

[64 FR 23922, May 4, 1999]

§ 86.907–93 Fee amounts.

The fee for each certification request type is:

	MY 1993	MY 1994 (and later)
LDV/LDT		
Fed Signed	$11,865	$23,731
Cal-only Signed	4,563	9,127
Fed Unsigned	1,095	2,190
Cal-only Unsigned	1,095	2,190
HDE/HDV		
Fed Signed	6,292	12,584
Cal-only Signed	1,072	2,145
Fed Unsigned	1,072	2,145
Cal-only Unsigned	1,072	2,145
All Evaporative-only	1,072	2,145
MCs		
Fed Signed	420	840
Cal-only Signed	420	840
Fed Unsigned	420	840
Cal-only Unsigned	420	840

§ 86.908–01 Waivers and refunds.

This section includes text that specifies requirements that differ from § 86.908–93. Where a paragraph in § 86.908–93–01 is identical and applicable to this section, this may be indicated by specifying the corresponding paragraph and the statement ''[Reserved]. For guidance see § 86.908–93.''

(a) [Reserved]. For guidance see § 86.908–93.

(b) *Request for refund.* The Administrator may refund a specified part of any fee imposed by § 86.907 if the applicant fails to obtain a signed certificate and requests a refund.

(1) That portion of the total fee to be refunded will be as follows:

[In percent]

	Federal	California-only
LDV/LDT	89.9	69.4
HDE/HDV	83.0	0
HD—Evaporative only	0	0
MC	0	0

(2) For a refund of a portion of a waiver payment due to a decrease in the projected retail sales price of the vehicles or engines to be covered by the certification request the applicant should submit documentation to EPA detailing the waiver fee adjustment.

(c) *Waiver and refund address.* A request for a waiver or refund of part of a fee shall be submitted in writing by the applicant to the Environmental Protection Agency, Vehicle Programs and Compliance Division, 2565 Plymouth Road, Ann Arbor, MI 48105.

[64 FR 23922, May 4, 1999]

§ 86.908–93 Waivers and refunds.

(a) *Request for waiver.* The Administrator may waive part of any fee imposed by § 86.907 of this subpart.

(1) A waiver will be granted to an applicant if the Administrator determines that:

(i) The certificate is to be used for sale of vehicles or engines within the United States; and

(ii) The full fee for a certification request for a MY exceeds 1% of the aggregate projected retail sales price of all vehicles covered by that certificate.

(iii) For converted vehicles that are dual-or flexible-fuel vehicles and can operate on a gaseous fuel, the full fee for a certification request for a MY exceeds 1% of the value added to the vehicle by the conversion, for MY 2000 through July 12, 2004.

(2) The request for waiver must be submitted prior to the payment of any fee and shall include evidence, such as prior actual sales, retail sales price, and previous waiver requests, clearly showing that the applicant satisfies the two waiver criteria. The retail sales price will be based on the total projected sales of all vehicles under a certificate, including vehicles modified under the modification and test option in 40 CFR 85.1509. For an ICI certificate, the retail sales price shall be based on the applicable National Automobile Dealer's Association (NADA) appraisal guide and/or other evidence of the actual market value.

(3) If a waiver is granted, the fee to be paid by the applicant shall be 1% of the aggregate projected retail sales price of the vehicles or engines to be covered by the certification request.

(4) The waiver request will be reviewed by EPA.

(i) EPA or its designee will analyze each waiver request to determine whether the applicant has met the standards for a waiver and then will notify the applicant of its grant or denial.

(ii) If the request is denied, the applicant will have 30 days from the date of notification of the denial to submit the appropriate fee to EPA or appeal the denial.

(5) Whenever the aggregate projected retail sales price of the vehicles or engines to be covered by the certification request changes and/or the certificate which is under a fee waiver expires, the applicant, as appropriate:

(i) Shall submit a filing form with payment of the additional waiver fee; or

(ii) May submit a request for a refund.

(6) The total waiver fee shall not exceed the full fee amount for the applicable certification request type.

(b) *Request for refund.* The Administrator may refund a specified part of any fee imposed by § 86.907 of this subpart if the applicant fails to obtain a signed certificate and requests a refund.

(1) That portion of the total fee to be refunded will be as follows:

	Federal (percent)	California only (percent)
LDV/LDT	90.8	76.0
HDE/HDV	83.0	0
HD-Evaporative only	0	0
MC	0	0

(2) For a refund of a portion of a waiver payment due to a decrease in the projected retail sales price of the vehicles or engines to be covered by the certification request the applicant should submit documentation to EPA detailing the waiver fee adjustment.

(c) *Waiver and refund address.* A request for a waiver or refund of part of a fee shall be submitted in writing by the applicant to the Environmental Protection Agency, Motor Vehicle and Engine Compliance Program, Certification Division, 2565 Plymouth Road, Ann Arbor, MI 48105.

(d)(1) For model years 2000 through 2003, the required fees under this subpart shall be waived for any light-duty vehicle, light-duty truck, or heavy-duty engine family that meets the small volume sales requirements of § 86.1838–01 and:

(i) Is a dedicated gaseous-fueled vehicle or engine OR;

(ii) Receives a certificate of conformity with the LEV, ILEV, ULEV, or ZEV emissions standards in 40 CFR part 88.

(2) If the manufacturer does not receive a certificate of conformity with the LEV, ILEV, ULEV, or ZEV emissions standards in 40 CFR part 88 as required in paragraph (d)(1)(iii) of this section, the fee requirements of this

section will apply. Before any certificate can be issued, the applicable fee must be paid.

(3) Manufacturers that have paid certification fees for model year 2000 vehicle and engine families that meet the criteria in paragraph (d)(1) of this section may request a refund of such fees. EPA shall refund such fees if it determines that the vehicle or engine family meets the criteria of paragraph (d)(1) of this section.

[57 FR 30055, July 7, 1992, as amended at 65 FR 11904, Mar. 7, 2000; 69 FR 26252, May 11, 2004]

§ 86.909–93 Payment.

(a) All fees required by this section shall be paid by money order, bank draft, certified check, corporate check, or electronic funds transfer payable in U.S. dollars to the order of the Environmental Protection Agency.

(b) All fees shall be forwarded with the filing form to the EPA to the address designated on the filing form.

(c) An application for which a partial waiver of the fee has been requested will not be accepted for processing until the appropriate fee has been determined and the balance waived or, if the waiver has been denied, the proper fee is submitted after notice of denial.

§ 86.910–93 Deficiencies.

(a) Any filing pursuant to § 86.909 of this subpart that is not accompanied by the appropriate filing fee is deficient.

(b) The Administrator will inform any person who submits a deficient filing that:

(1) Such filing will be rejected and the amount paid refunded, unless the appropriate fee is submitted within a specified time;

(2) EPA will not process any filing that is deficient under this section; and

(3) The date of filing will be deemed the date on which EPA receives the appropriate fee.

§ 86.911–93 Adjustments of fees.

(a) The fee schedule will be changed annually by the same percentage as the percent change in the CPI for all urban consumers.

(b) This annual change will occur within 60 days following release of the final estimates of the annual average for the CPI for all urban consumers by the Department of Labor.

(c) MVECP costs and fees will periodically be reviewed and changes will be made to the schedule as necessary.

(d) When automatic adjustments are made, based on the CPI, the new fee will be published in the FEDERAL REGISTER as a final rule to become effective 30 days or more after publication, as specified in the final rule.

(e) When changes are made based on periodic reviews, the changes will be subject to public comment.

Subpart K—Selective Enforcement Auditing of New Heavy-Duty Engines, Heavy-Duty Vehicles, and Light-Duty Trucks

SOURCE: 45 FR 63772, Sept. 25, 1980, unless otherwise noted.

§ 86.1001–84 Applicability.

The provisions of this subpart are applicable for 1984 and later model year heavy-duty engines and light-duty trucks.

(a) *Section numbering; construction.* (1) The model year of initial applicability is indicated by the two digits following the hyphen of the section number. A section remains in effect for subsequent model years until it is superseded.

(2) A section reference without a model year suffix shall be interpreted to be a reference to the section applicable to the appropriate model year.

(b) References in this subpart to engine families and emission control systems shall be deemed to apply to durability groups and test groups as applicable for manufacturers certifying new light-duty vehicles, light-duty trucks, and Otto-cycle complete heavy-duty vehicles under the provisions of subpart S of this part.

[54 FR 14559, Apr. 11, 1989, as amended at 62 FR 31238, June 6, 1997; 64 FR 23922, May 4, 1999; 65 FR 59957, Oct. 6, 2000]

§ 86.1002–84 Definitions.

(a) The definitions in this section apply to this subpart.

(b) As used in this subpart, all terms not defined herein have the meaning given them in the Act.

Acceptable Quality Level (AQL) means the maximum percentage of failing engines or vehicles, that for purposes of sampling inspection, can be considered satisfactory as a process average.

Configuration means a subclassification, if any, of a heavy-duty engine family for which a separate projected sales figure is listed in the manufacturer's Application for Certification and which can be described on the basis of emission control system, governed speed, injector size, engine calibration, and other parameters which may be designated by the Administrator, or a subclassification of a light-duty truck engine family/emission control system combination on the basis of engine code, inertia weight class, transmission type and gear ratios, axle ratio, and other parameters which may be designated by the Administrator.

Compliance level means an emission level determined during a Production Compliance Audit pursuant to subpart L of this part.

Test Sample means the collection of vehicles or engines of the same configuration which have been drawn from the population of engines or vehicles of that configuration and which will receive exhaust emission testing.

Inspection Criteria means the pass and fail numbers associated with a particular sampling plan.

Test Engine means an engine in a test sample.

Test Vehicle means a vehicle in a test sample.

[45 FR 63772, Sept. 25, 1980, as amended at 48 FR 52207, Nov. 16, 1983; 50 FR 35386, Aug. 30, 1985]

§ 86.1002–97 Definitions.

(a) The definitions in this section apply to this subpart.

(b) As used in this subpart, all terms not defined in this section have the meaning given them in the Act.

Acceptable quality level (AQL) means the maximum percentage of failing engines or vehicles, that for purposes of sampling inspection, can be considered satisfactory as a process average.

Axle ratio means all ratios within ±3% of the axle ratio specified in the configuration in the test order.

Compliance level means an emission level determined during a Production Compliance Audit pursuant to subpart L of this part.

Configuration means a subclassification, if any, of a heavy-duty engine family for which a separate projected sales figure is listed in the manufacturer's Application for Certification and which can be described on the basis of emission control system, governed speed, injector size, engine calibration, and other parameters which may be designated by the Administrator, or a subclassification of a light-duty truck engine family/emission control system combination on the basis of engine code, inertia weight class, transmission type and gear rations, axle ratio, and other parameters which may be designated by the Administrator.

Executive Officer means the Executive Officer of the California Air Resources Board or his or her authorized representative.

Executive Order means the document the Executive Officer grants a manufacturer for an engine family that certifies the manufacturer has verified the engine family complies with all applicable standards and requirements pursuant to Title 13 of the California Code of Regulations.

50-state engine family means an engine family that meets both federal and California Air Resources Board motor vehicle emission control regulations and has received a federal certificate of conformity as well as an Executive Order.

Inspection criteria means the pass and fail numbers associated with a particular sampling plan.

Test engine means an engine in a test sample.

Test sample means the collection of vehicles or engines of the same configuration which have been drawn from the population of engines or vehicles of that configuration and which will receive exhaust emission testing.

Test vehicle means a vehicle in a test sample.

[62 FR 31238, June 6, 1997]

§ 86.1002–2001 Definitions.

(a) The definitions in this section apply to this subpart.

(b) As used in this subpart, all terms not defined in this section have the meaning given them in the Act.

(1) *Acceptable quality level* (AQL) means the maximum percentage of failing engines or vehicles, that for purposes of sampling inspection, can be considered satisfactory as a process average.

(2) *Compliance level* means an emission level determined during a Production Compliance Audit pursuant to subpart L of this part.

(3) *Configuration* means a subclassification, if any, of a heavy-duty engine family for which a separate projected sales figure is listed in the manufacturer's Application for Certification and which can be described on the basis of emission control system, governed speed, injector size, engine calibration and other parameters which may be designated by the Administrator, or for light-duty trucks a subclassification of a light-duty truck engine family/emission control system combination on the basis of engine code, inertia weight class, transmission type and gear ratios, axle ratio, and other parameters which may be designated by the Administrator and/or a subclassification of a light-duty truck evaporative/refueling emission family/emission control system.

(4) *Test sample* means the collection of vehicles or engines of the same configuration which have been drawn from the population of vehicles or engines of that configuration and which will receive emission testing.

(5) *Inspection criteria* means the pass and fail numbers associated with a particular sampling plan.

(6) *Test engine* means an engine in a test sample.

(7) *Test vehicle* means a vehicle in a test sample.

(8) *Axle ratio* means all ratios within ±3% of the axle ratio specified in the configuration in the test order.

(9) *Executive Officer* means the Executive Officer of the California Air Resources Board or his or her authorized representative.

(10) *Executive Order* means the document the Executive Officer grants a manufacturer for an engine family that certifies the manufacturer has verified the engine family complies with all applicable standards and requirements pursuant to Title 13 of the California Code of Regulations.

(11) *50-state engine family* means an engine family that meets both federal and California Air Resources Board motor vehicle emission control regulations and has received a federal certificate of conformity as well as an Executive Order.

[59 FR 16304, Apr. 6, 1994, as amended at 62 FR 31238, June 6, 1997]

§ 86.1003–90 Test orders.

(a) The Administrator shall require any testing under this subpart by means of a test order addressed to the manufacturer.

(b) The test order will be signed by the Assistant Administrator for Air and Radiation or his designee. The test order will be delivered in person by an EPA Enforcement Officer to a company representative or sent by registered mail, return receipt requested, to the manufacturer's representative who signs the Application for Certification submitted by the manufacturer pursuant to the requirements of this applicable section of subpart A of this part. Upon receipt of a test order, the manufacturer shall comply with all of the provisions of this subpart and instructions in the test order.

(c)(1) The test order will specify the engine or vehicle configuration selected for testing, the manufacturer's vehicle or engine assembly plant or associated storage facility from which the engines or vehicles must be selected, the time and location at which engines or vehicles must be selected, and the procedure by which engines or vehicles of the specified configuration must be selected. The test order may specify the number of vehicles or engines to be selected per day.

(i) If the total production of the specified vehicle configuration is less than the number specified in the test order, the manufacturer will select the actual number of vehicles produced per day.

(ii) Heavy-duty engine manufacturers will be required to select a minimum of four engines per day unless an alternate selection procedure is approved

pursuant to § 86.1007–84(a) or unless total production of the specified configuration is less than four engines per day. If total production of the specified configuration is less than four engines per day, the manufacturer will select the actual number of engines produced that day.

(2) The test order may include alternative configurations to be selected for testing in the event that engines or vehicles of the specified configuration are not available for testing because those engines or vehicles are not being manufactured during the specified time, or not being stored at the specified assembly plant or associated storage facilities.

(3) If the specified configuration is not being manufactured at a rate of at least four vehicles per day, in the case of light-duty truck manufacturers, two engines per day, in the case of heavy-duty engine manufacturers specified in paragraph (g)(1) of § 86.1008–84 or one engine per day, in the case of heavy-duty engine manufacturers specified in paragraph (g)(2) of § 86.1008–90, over the expected duration of the audit, the Assistant Administrator or his designated representative may select engines or vehicles of the alternate configuration for testing.

(4) In addition, the test order may include other directions or information essential to the administration of the required testing.

(d) A manufacturer may submit a list of engine families and the corresponding assembly plants or associated storage facilities from which the manufacturer prefers to have engines or vehicles selected for testing or response to a test order. In order that a manufacturer's preferred location be considered for inclusion in a test order for a configuration of a particular engine family, the list must be submitted prior to issuance of the test order. Notwithstanding the fact that a manufacturer has submitted the above list, the Administrator may order selection at other than a preferred location.

(e) Upon receipt of a test order, a manufacturer shall proceed in accordance with the provisions of this subpart.

(f)(1) During a given model year, the Administrator shall not issue to a manufacturer more Selective Enforcement Audit (SEA) test orders than an annual limit determined by the following:

(i) For manufacturers of heavy-duty engines, either petroleum-fueled or methanol-fueled, the number determined by dividing the projected heavy-duty engine sales bound for the United States market for that year, as made by the manufacturer in its Application for Certification, by 30,000 and rounding to the nearest whole number, unless the projected sales are less than 15,000, in which case the number is one;

(ii) For manufacturers of petroleum-fueled or methanol-fueled light-duty trucks, the number determined by dividing the projected light-duty truck sales bound for the United States market for that model year, as made by the manufacturer in its report submitted under paragraph (a)(2) of § 600.207–80 of the Automobile Fuel Economy Regulations, by 300,000 and rounding to the nearest whole number, unless the projected sales are less than 150,000, in which case the number is one.

(iii) If a manufacturer submits to EPA in writing prior to or during the model year a reliable sales projection update, that update will be used for recalculating the manufacturer's annual limit of SEA test orders.

(2) Any SEA test order for which the configuration fails in accordance with § 86.1010 or for which testing is not completed will not be counted against the annual limit.

(3) When the annual limit has been met, the Administrator may issue additional test orders for those configurations for which evidence exists indicating noncompliance. An SEA test order issued on this basis will include a statement as to the reason for its issuance.

[54 FR 14559, Apr. 11, 1989]

§ 86.1003–97 Test orders.

Section 86.1003–97 includes text that specifies requirements that differ from those specified in § 86.1003–90. Where a paragraph in § 86.1003–90 is identical and applicable to § 86.1003–97, this may

be indicated by specifying the corresponding paragraph and the statement ''[Reserved]. For guidance see § 86.1003–90.''

(a) through (f) [Reserved]. For guidance see § 86.1003–90.

(g) In the event evidence exists indicating an engine family is in noncompliance, the Administrator may, in addition to other powers provided by this section, issue a test order specifying the engine family the manufacturer is required to test.

[62 FR 31238, June 6, 1997]

§ 86.1003–2001 Test orders.

Section 86.1003–2001 includes text that specifies requirements that differ from § 86.1003–88. Where a paragraph in § 86.1003–88 is identical and applicable to § 86.1003–2001, this may be indicated by specifying the corresponding paragraph and the statement ''[Reserved]. For guidance see § 86.1003–88.'' Where a corresponding paragraph of § 86.1003–88 is not applicable, this is indicated by the statement ''[Reserved].''.

(a) through (c)(1)(ii) [Reserved]. For guidance see § 86.1003–88.

(c)(1)(iii) Heavy-duty vehicle manufacturers will be required to select a minimum of four vehicles per day unless an alternate selection procedure is approved pursuant to § 86.1007–84(a) or unless total production of the specified configuration is less than four vehicles per day. If total production of the specified configuration is less than four vehicles per day, the manufacturer will select the actual number of vehicles produced per day.

(2) The test order may include alternative configurations to be selected for testing in the event that engines or vehicles of the specified configuration are not available for testing because those engines or vehicles are not being manufactured during the specified time, or not being stored at the specified assembly plant or associated storage facilities.

(3) If the specified configuration is not being manufactured at a rate of at least four vehicles per day, in the case of light-duty truck manufacturers, two heavy-duty engines or heavy-duty vehicles, in the case of heavy-duty vehicle and heavy-duty engine manufacturers specified in § 86.1008–2001(g)(1), or one engine or heavy-duty vehicle per day, in the case of heavy-duty vehicle or engine manufacturers specified in § 86.1008–2001(g)(2), over the expected duration of the audit, the Assistant Administrator or a designated representative may select engines or vehicles of an alternate configuration for testing.

(4) In addition, the test order may include other directions or information essential to the administration of the required testing.

(d) A manufacturer may submit a list of engine families and, if applicable, evaporative/refueling families and the corresponding assembly plants or associated storage facilities from which the manufacturer prefers to have engines or vehicles selected for testing in response to a test order. In order that a manufacturer's preferred location be considered for inclusion in a test order for a configuration of a particular engine family and/or evaporative/refueling family, the list must be submitted prior to issuance of the test order. Notwithstanding the fact that a manufacturer has submitted the above list, the Administrator may, upon making the determination that evidence exists indicating noncompliance at other than the manufacturer's preferred plant, order testing at such other plant where vehicles of the configuration specified in the test order are assembled.

(e) Upon receipt of a test order, a manufacturer shall proceed in accordance with the provisions of this subpart.

(f)(1) During a given model year, the Administrator shall not issue to a manufacturer more Selective Enforcement Auditing (SEA) test orders than the annual limit determined by the following:

(i) For manufacturers of heavy-duty engines or vehicles, either gasoline-fueled or diesel, the number determined by dividing the projected sales bound for the United States market for that year, as made by the manufacturer in its Application for Certification, by 30,000 and rounded to the nearest whole number, unless the projected sales are less than 15,000, in which case the number is one;

(f)(1)(ii) through (f)(3) [Reserved]. For guidance see § 86.1003–88.

(g) In the event evidence exists indicating an engine family is in noncompliance, the Administrator may, in addition to other powers provided by this section, issue a test order specifying the engine family the manufacturer is required to test.

[59 FR 16305, Apr. 6, 1994, as amended at 62 FR 31238, June 6, 1997]

§ 86.1004–84 Testing by the Administrator.

(a) The Administrator may require by test order that engines or vehicles of a specified configuration be selected in a manner consistent with the requirements of § 86.1007–84 and submitted to him at such place as he may designate for the purpose of conducting emission tests. These tests will be conducted in accordance with § 86.1008–84 of these regulations to determine whether engines or vehicles manufactured by the manufacturer conform with the regulations with respect to which the certificate of conformity was issued.

(b)(1) Whenever the Administrator conducts a test on a test engine or vehicle or the Administrator and manufacturer each conduct a test on the same test engine or vehicle, the results of the Administrator's test will comprise the official data for that engine or vehicle.

(2) Whenever the manufacturer conducts all tests on a test engine or vehicle, the manufacturer's test data will be accepted as the official data: *Provided*, That if the Administrator makes a determination based on testing under paragraph (a) of this section that there is a substantial lack of agreement between the manufacturer's test results and the Administrator's test results, no manufacturer's test data from the manufacturer's test facility will be accepted for purposes of this subpart.

(c) If testing conducted under paragraph (a) of this section demonstrates a lack of agreement under paragraph (b)(2) of this section, the Administrator shall:

(1) Notify the manufacturer in writing of his determination that the test facility is inappropriate for conducting the tests required by this subpart and the reasons therefor; and

(2) Reinstate any manufacturer's data upon a showing by the manufacturer that the data acquired under paragraph (a) of this section was erroneous and the manufacturer's data was correct.

(d) The manufacturer may request in writing that the Administrator reconsider his determination in paragraph (b)(2) of this section based on data or information which indicates that changes have been made to the test facility and these changes have resolved the reasons for disqualification.

§ 86.1005–90 Maintenance of records; submittal of information.

(a) The manufacturer of any new petroleum-fueled or methanol-fueled heavy-duty engine or light-duty truck subject to any of the provisions of this subpart shall establish, maintain, and retain the following adequately organized and indexed records:

(1) *General records.* A description of all equipment used to test engines or vehicles in accordance with § 86.1008 pursuant to a test order issued under this subpart, specifically:

(i) If testing heavy-duty gasoline-fueled or methanol-fueled Otto-cycle engines, the equipment requirements specified in 40 CFR part 1065, subparts B and C;

(ii) If testing heavy-duty petroleum-fueled or methanol-fueled diesel engines, the equipment requirements specified in 40 CFR part 1065, subparts B and C;

(iii) If testing gasoline-fueled or methanol-fueled Ottocycle light-duty trucks, the equipment requirements specified in § 86.106 (excluding all references to evaporative and particulate emission testing), § 86.206, and § 86.1506–84 of this subpart; and

(iv) If testing petroleum-fueled or methanol-fueled diesel light-duty trucks, the equipment requirements specified in §§ 86.106 (excluding all references to evaporative emission testing) and 86.1506–83 of this part.

(2) *Individual records.* These records pertain to each audit conducted pursuant to this subpart.

(i) The date, time, and location of each test;

(ii) The number of hours of service accumulated on each engine or the number of miles on the vehicle when the test began and ended;

(iii) The names of all supervisory personnel involved in the conduct of the audit;

(iv) A record and description of any repairs performed prior to and/or subsequent to approval by the Administrator, giving the date and time of the repair, the reason for it, the person authorizing it, and the names of all supervisory personnel responsible for the conduct of the repair;

(v) The date when the engine or vehicle was shipped from the assembly plant or associated storage facility and when it was received at the testing facility;

(vi) A complete record of all emission tests performed pursuant to this subpart (except tests performed by EPA directly), including all individual worksheets and/or other documentation relating to each test, or exact copies thereof, specifically

(A) If testing gasoline-fueled or methanol-fueled Otto-cycle heavy-duty engines, the record requirements specified in 40 CFR 1065.695;

(B) If testing petroleum-fueled or methanol-fueled diesel heavy-duty engines, the record requirements specified in 40 CFR 1065.695;

(C) If testing gasoline-fueled or methanol-fueled Ottocycle light-duty trucks, the record requirements specified in § 86.142 (excluding all references to diesel vehicles), § 86.242, and § 86.1542; and

(D) If testing petroleum-fueled or methanol-fueled diesel light-duty trucks, the record requirements specified in § 86.142; and

(vii) A brief description of any significant audit events commencing with the test engine or vehicle selection process, but not described by any subparagraph under paragraph (a)(2) of this section, including such extraordinary events as engine damage during shipment or vehicle accident.

(viii) A paper copy of the driver's trace for each test.

(3) The manufacturer shall record test equipment description, pursuant to paragraph (a)(1) of this section, for each test cell that can be used to perform emission testing under this subpart.

(b) The manufacturer shall retain all records required to be maintained under this subpart for a period of one (1) year after completion of all testing in response to a test order. Records may be retained as hard copy or reduced to microfilm, punch cards, etc., depending upon the manufacturer's record retention procedure: *Provided*, that in every case all information contained in the hard copy is retained.

(c) Pursuant to a request made by the Administrator, the manufacturer shall submit to him the following information with regard to engine or vehicle production:

(1) Number of engines or vehicles, by configuration and assembly plant, scheduled for production for the time period designated in the request.

(2) Number of engines or vehicles, by configuration and assembly plan, produced during the time period designated in the request which are complete form introduction into commerce.

(d) Nothing in this section limits the Administrator's discretion in requiring the manufacturer to retain additional records or submit information not specifically required by this section.

(e) The manufacturer shall address all reports, submissions, notifications, and requests for approvals made under this subpart to: Director, Manufacturers Operations Division, U.S. Environmental Protection Agency, EN–340, 1200 Pennsylvania Ave., NW., Washington, DC 20460.

[54 FR 14560, Apr. 11, 1989, as amended at 57 FR 31922, July 17, 1992; 70 FR 40437, July 13, 2005]

§ 86.1006–84 Entry and access.

(a) To allow the Administrator to determine whether a manufacturer is complying with the provisions of this subpart and a test order issued thereunder, EPA Enforcement Officers are authorized to enter during operating hours and upon presentation of credentials any of the following:

(1) Any facility where any engine or vehicle to be introduced into commerce or any emission related component is manufactured, assembled, or stored;

(2) Any facility where any tests conducted pursuant to a test order or any procedures or activities connected with these tests are or were performed;

(3) Any facility where any engine or vehicle which is being tested, was tested, or will be tested is present; and

(4) Any facility where any record or other document relating to any of the above is located.

(b) Upon admission to any facility referred to in paragraph (a) of this section, EPA Enforcement Officers are authorized to perform the following inspection-related activities:

(1) To inspect and monitor any aspects of engine or vehicle manufacture, assembly, storage, testing and other procedures, and the facilities in which these procedures are conducted;

(2) To inspect and monitor any aspect of engine or vehicle test procedures or activities, including, but not limited to, monitoring engine or vehicle selection, preparation, service or mileage accumulation, preconditioning, emission test cycles, and maintenance; and to verify calibration of test equipment;

(3) To inspect and make copies of any records or documents related to the assembly, storage, selection and testing of an engine or vehicle in compliance with a test order; and

(4) To inspect and photograph any part or aspect of any engine or vehicle and any component used in the assembly thereof that is reasonably related to the purpose of the entry.

(c) EPA Enforcement Officers are authorized to obtain reasonable assistance without cost from those in charge of a facility to help them perform any function listed in this subpart and are authorized to request the recipient of a test order to make arrangements with those in charge of a facility operated for its benefit to furnish reasonable assistance without cost to EPA whether or not the recipient controls the facility.

(d) EPA Enforcement Officers are authorized to seek a warrant or court order authorizing the EPA Enforcement Officers to conduct activities related to entry and access as authorized in this section, as appropriate, to execute the functions specified in this section. EPA Enforcement Officers may proceed *ex parte* to obtain a warrant whether or not the Enforcement Officers first attempted to seek permission of the recipient of the test order or the party in charge of the facilities in question to conduct activities related to entry and access as authorized in this section.

(e) A recipient of a test order shall permit EPA Enforcement Officers who present a warrant or court order as described in paragraph (d) of this section to conduct activities related to entry and access as authorized in this section and as described in the warrant or court order. The recipient shall cause those in charge of its facility or a facility operated for its benefit to permit EPA Enforcement Officers to conduct activities related to entry and access as authorized in this section pursuant to a warrant or court order whether or not the recipient controls the facility. In the absence of such a warrant or court order, EPA Enforcement Officers may conduct activities related to entry and access as authorized in this section only upon the consent of the recipient of the test order or the party in charge of the facilities in question.

(f) It is not a violation of this part or the Clean Air Act for any person to refuse to permit EPA Enforcement Officers to conduct activities related to entry and access as authorized in this section without a warrant or court order.

(g) A manufacturer is responsible for locating its foreign testing and manufacturing facilities in jurisdictions in which local foreign law does not prohibit EPA Enforcement Officers from conducting the entry and access activities specified in this section. EPA will not attempt to make any inspections which it has been informed that local foreign law prohibits.

(h) For purposes of this section, the following definitions are applicable:

(1) *Presentation of Credentials* means display of the document designating a person as an EPA Enforcement Officer.

(2) Where engine or vehicle storage areas or facilities are concerned, *operating hours* means all times during which personnel other than custodial personnel are at work in the vicinity of the area or facility and have access to it.

(3) Where facilities or areas other than those covered by paragraph (h)(2) of this section are concerned, *operating hours* means all times during which an assembly line is in operation, engine or

vehicle assembly is taking place, testing, repair, service accumulation, production or compilation of records is taking place, or any other procedure or activity related to engine or vehicle manufacture, assembly or testing is being carried out in a facility.

(4) *Reasonable assistance* includes, but is not limited to, clerical, copying, interpreting and translating services, and the making available on an EPA Enforcement Officer's request of personnel of the facility being inspected during their working hours to inform the EPA Enforcement Officer of how the facility operates and to answer his or her questions. Any employee whom an EPA Enforcement Officer requests the manufacturer to cause to appear for questioning will be entitled to be accompanied, represented and advised by counsel.

[45 FR 63772, Sept. 25, 1980, as amended at 48 FR 52208, Nov. 16, 1983]

§ 86.1007–84 Sample selection.

(a) Engines or vehicles comprising a test sample which are required to be tested, pursuant to a test order issued in accordance with this subpart, will be selected at the location and in the manner specified in the test order. If a manufacturer determines that the test engines or vehicles cannot be selected in the manner specified in the test order, an alternative selection procedure may be employed: *Provided,* That the manufacturer requests approval of the alternative procedure in advance of the start of test sample selection and that the Administrator approves the procedure.

(b) The manufacturer shall have assembled the test engines or vehicles of the configuration selected for testing using its normal mass production process for engines or vehicles to be distributed into commerce. During the audit, the manufacturer shall inform the Administrator of any change(s) implemented in its production processes, including quality control, which may reasonably be expected to affect the emissions of the vehicles or engines selected, between the time the manufacturer is notified of a test order and the time the manufacturer finishes selecting test vehicles or engines. In the case of heavy-duty engines, if the test engines are selected at a location where they do not have their operational and emission control systems installed, the test order will specify the manner and location for selection of components to complete assembly of the engines. The manufacturer shall assemble these components onto the test engines using normal assembly and quality control procedures as documented by the manufacturer.

(c) No quality control, testing, or assembly procedures will be used on the completed test engine or vehicle or any portion thereof, including parts and subassemblies, that has not been or will not be used during the production and assembly of all other engines or vehicles of that configuration, except, that the Administrator may approve a modification in the normal assembly procedures pursuant to paragraph (b) of this section.

(d) The test order may specify that EPA Enforcement Officers, rather than the manufacturer, will select the test engines or vehicles according to the method specified in the test order.

(e) The order in which test engines or vehicles are selected determines the order in which test results are to be used in applying the sampling plan in accordance with § 86.1010–84.

(f) The manufacturer shall keep on hand all untested engines or vehicles, if any, comprising the test sample until such time as a pass or fail decision is reached in accordance with § 86.1010–84(d). The manufacturer may ship any tested engine or vehicle which has not failed in accordance with § 86.1010–84(b). However, once the manufacturer ships any test engine or vehicle, it relinquishes the prerogative to conduct retests as provided in § 86.1008–84(i).

[45 FR 63772, Sept. 25, 1980, as amended at 48 FR 52208, Nov. 16, 1983]

§ 86.1008–90 Test procedures.

(a)(1)(i) For heavy-duty engines, the prescribed test procedure is the Federal Test Procedure, as described in subparts N, I, and P of this part.

(ii) For heavy-duty vehicles with a GVW of less than 14,000 pounds (6,400 kilograms), the prescribed test procedure is the Fuel Dispensing Spitback Test as described in 86.1246–96 of this

part. The test for fuel spitback is conducted as a stand-alone test, thus all references to the test sequence described in figure M96–1 of subpart M of this part can be ignored.

(iii) During the testing of heavy-duty diesel engines, the manufacturer shall decide for each engine, prior to the start of the initial cold cycle, whether the measurement of background particulate is required for the cold and hot cycles to be valid. The manufacturer may choose to have different requirements for the cold and hot cycles. If a manufacturer chooses to require the measurement of background particulate, failure to measure background particulate shall void the test cycle regardless of the test results. If a test cycle is void, the manufacturer shall retest using the same validity requirements of the initial test.

(2) For light-duty trucks, the prescribed test procedure is the Federal Test Procedure as described in subparts B, P, and/or C of this part. The manufacturer shall not perform the evaporative emission test procedures contained in subpart B of this part. The Administrator may, based on advance application by a manufacturer, approve optional test procedures for use in Selective Enforcement Audit testing.

(3) When testing light-duty trucks the following exceptions to the test procedures in subpart B are applicable:

(i) For mileage accumulation, the manufacturer may use test fuel meeting the specifications of mileage and service accumulation fuels of § 86.113. Otherwise, the manufacturer may use fuels other than those specified in this section only with the advance approval of the Administrator.

(ii) The manufacturer may measure the temperature of the test fuel at other than the approximate mid-volume of the fuel tank, as specified in § 86.131–96(a) with only a single temperature sensor, and may drain the test fuel from other than the lowest point of the tank, as specified in § 86.131–96(b), provided an equivalent method is used. Equivalency documentation shall be maintained by the manufacturers and shall be made available to the Administrator upon request.

(iii) The manufacturer may perform additional preconditioning on SEA test vehicles other than the preconditioning specified in § 86.132 only if the additional preconditioning had been performed on certification test vehicles of the same configuration.

(iv) If the Administrator elects to use the evaporative canister preconditioning procedure described in § 86.132–96(k), the manufacturer shall perform the heat build procedure 11 to 34 hours following vehicle preconditioning rather than according to the time period specified in § 86.133–90(a). All references in § 86.133–90 to an evaporative emission enclosure (SHED) and analyzing for HC during the heat build can be ignored.

(v) The manufacturer may substitute slave tires for the drive wheel tires on the vehicle as specified in paragraph (e) of § 86.135–90: *Provided*, that the slave tires are the same size.

(vi) If the Administrator elects to use the evaporative canister preconditioning procedure described in § 86.132–96(k), the cold start exhaust test described in § 86.137 shall follow the heat build procedure described in § 86.133–90 by not more than one hour.

(vii) In performing exhaust sample analysis under § 86.140.

(A) When testing diesel vehicles or methanol-fueled vehicles, the manufacturer shall allow a minimum of 20 minutes warm-up for the HC analyzer, and a minimum of 2 hours warm-up for the CO, CO_2 and NO_X analyzers. (Power is normally left on infrared and chemiluminescent analyzers. When not in use, the chopper motors of the infrared analyzers are turned off and the phototube high voltage supply to the chemiluminescent analyzers is placed in the standby position.)

(B) The manufacturer shall exercise care to prevent moisture from condensing in the sample collection bags.

(viii) The manufacturer need not comply with § 86.142, since the records required therein are provided under other provisions of subpart K of this part.

(ix) In addition to the requirements of subpart B of this part, the manufacturer shall prepare gasoline-fueled vehicles and methanol-fueled vehicles as follows prior to exhaust emission testing:

(A) The manufacturer shall inspect the fuel system to insure the absence

of any leaks of liquid or vapor to the atmosphere by applying a pressure of 14.5 + 0.5 inches of water to the fuel system, allowing the pressure to stabilize, and isolating the fuel system from the pressure source. Following isolation of the fuel system, pressure must not drop more than 2.0 inches of water in five minutes. If required, the manufacturer shall perform corrective action in accordance with § 86.1008 and report this action in accordance with § 86.1009.

(B) When performing this pressure check, the manufacturer shall exercise care to neither purge nor load the evaporative emission control system.

(C) The manufacturer shall not modify the test vehicle's evaporative emission control system by component addition, deletion, or substitution, except to comply with paragraph (a)(4)(ii) of this section if approved in advance by the Administrator.

(4) The Administrator, may on the basis of a written application by a manufacturer, prescribe minor test procedure variations from those set forth in paragraphs (a)(1) and (a)(2) of this section for any heavy-duty engine.

(5) When testing light-duty trucks, the following exceptions to the test procedures in subpart C of this part are applicable:

(i) The manufacturer may measure the temperature of the test fuel at other than the approximate mid-volume of the fuel tank as specified in § 86.231(a) and may drain the test fuel from other than the lowest point of the fuel tank as specified in § 86.231(b) provided an equivalent method is used. Equivalency documentation shall be maintained by the manufacturer and shall be made available to the Administrator upon request.

(ii) In performing exhaust sample analysis under § 86.240, the manufacturer shall exercise care to prevent moisture from condensing in the sample collection bags.

(iii) The manufacturer need not comply with § 86.242 since the records required therein are provided under other provisions of subpart K of this part.

(iv) In addition to the requirements of subpart C of this part, the manufacturer shall prepare gasoline-fueled vehicles as follows prior to exhaust emission testing.

(A) The manufacturer shall inspect the fuel system to ensure the absence of any leaks of liquid or vapor to the atmosphere by applying a pressure of 14.5±0.5 inches of water (3.6±0.1 kPa) in the fuel system allowing the pressure to stabilize and isolating the fuel system from the pressure sources. Following isolation of the fuel system, pressure must not drop more than 2.0 inches of water (0.5 kPa) in 5 minutes. If required, the manufacturer shall perform corrective action in accordance with paragraph § 86.1008(d) and report this action in accordance with paragraph § 86.1009(d).

(B) When performing this pressure check, the manufacturer shall exercise care to neither purge nor load the evaporative emission control system.

(C) The manufacturer shall not modify the test vehicle's evaporative emission control system by component addition, deletion, or substitution, except if approved in advance by the Administrator to comply with paragraph (a)(5)(i) of this section.

(b)(1) The manufacturer shall not adjust, repair, prepare, or modify the engines or vehicles selected for testing and shall not perform any emission tests on engines or vehicles selected for testing and shall not perform any emission tests on engines or vehicles selected for testing pursuant to the test order unless this adjustment, repair, preparation, modification, and/or tests are documented in the manufacturer's engine or vehicle assembly and inspection procedures and are actually performed or unless these adjustments and/or test are required or permitted under this subpart or are approved in advance by the Administrator.

(2) For 1984 and later model years the Administrator may adjust or cause to be adjusted any engine parameter which the Administrator has determined to be subject to adjustment for certification, Selective Enforcement Audit, and Production Compliance Audit testing in accordance with § 86.090–22(e)(1), to any setting within the physically adjustable range of that parameter, as determined by the Administrator in accordance with § 86.090–22(e)(3)(ii), prior to the performance of

any tests. However, if the idle speed parameter is one which the Administrator has determined to be subject to adjustment, the Administrator shall not adjust it to any setting which causes a lower engine idle speed than would have been possible within the physically adjustable range of the idle speed parameter if the manufacturer had accumulated 125 hours of service on the engine or 4,000 miles on the vehicle under paragraph (c) of this section, all other parameters being identically adjusted for the purpose of the comparison. The manufacturer may be requested to supply information to establish such an alternative minimum idle speed. The Administrator, in making or specifying these adjustments, may consider the effect of the deviation from the manufacturer's recommended setting on emissions performance characteristics as well as the likelihood that similar settings will occur on in-use heavy-duty engines or light-duty trucks. In determining likelihood, the Administrator may consider factors such as, but not limited to, the effect of the adjustment on engine or vehicle performance characteristics and surveillance information from similar in-use engines or vehicles.

(c) Prior to performing exhaust emission testing on an SEA test engine, the manufacturer may accumulate on each engine a number of hours of service equal to the greater of 125 hours or the number of hours the manufacturer accumulated during certification on the emission-data engine corresponding to the configuration specified in the test order. Prior to performing exhaust emission testing on an SEA test vehicle, the manufacturer may accumulate a number of miles equal to the greater of 4,000 miles or the number of miles the manufacturer accumulated during certification on the emission data vehicle corresponding to the configuration specified in the test order.

(1) Service or mileage accumulation must be performed in a manner using good engineering judgment to obtain emission results representative of normal production vehicles. This service or mileage accumulation must be consistent with the new vehicle break-in instructions contained in the applicable vehicle owner's manual, if any.

(2) The manufacturer shall accumulate service at a minimum rate of 16 hours per engine or mileage at a minimum rate of 300 miles per vehicle during each 24-hour period, unless otherwise provided by the Administrator.

(i) The first 24 hour period for service or mileage accumulation shall begin as soon as authorization checks, inspections and preparations are completed on each engine or vehicle.

(ii) The minimum service or mileage accumulation rate does not apply on weekends or holidays.

(iii) If the manufacturer's service or mileage accumulation target is less than the minimum rate specified (16 hours or 300 miles per day), then the minimum daily accumulation rate shall be equal to the manufacturer's service or mileage accumulation target.

(3) Service or mileage accumulation shall be completed on a sufficient number of test engines or vehicles during consecutive 24-hour periods to assure that the number of engines or vehicles tested per day fulfills the requirements of paragraph (g) of this section.

(d) The manufacturer shall not perform any maintenance on test vehicles or engines after selection for testing, nor shall the Administrator allow deletion of any test vehicle or engine from the test sequence, unless requested by the manufacturer, and approved by the Administrator before any test vehicle or engine maintenance or deletion.

(e) The manufacturer shall expeditiously ship test engines or vehicles from the point of selection to the test facility. If the test facility is not located at or in close proximity to the point of selection, the manufacturer shall assure that test engines or vehicles arrive at the test facility within 24 hours of selection: *Except*, that the Administrator may approve more time based upon a request by the manufacturer accompanied by a satisfactory justification.

(f) If an engine or vehicle cannot complete the service or mileage accumulation or emission test because of a malfunction, the manufacturer may request that the Administrator authorize the repair of that engine or vehicle or its deletion from the test sequence.

(g) Whenever a manufacturer conducts testing pursuant to a test order issued under this subpart, the manufacturer shall notify the Administrator within one working day of receipt of the test order which test facility will be used to comply with the test order. If no test cells are available at a desired facility, the manufacturer must provide alternate testing capability satisfactory to the Administrator.

(1) Heavy-duty engine manufacturers with projected sales for the United States market for that year of 30,000 or greater shall complete emission testing at their facility on a minimum of two engines per 24-hour period, including each voided test and each diesel engine smoke test.

(2) Heavy-duty engine manufacturers with projected sales for the United States market for that year of less than 30,000 shall complete emission testing at their facility on a minimum of one engine per 24-hour period, including each voided test and each diesel engine smoke test.

(3) Light-duty truck manufacturers shall complete emission testing at their facility on a minimum of four engines per 24-hour period, including each voided test.

(4) The Administrator may approve a lower daily rate of conducting emission tests based upon a request by a satisfactory justification.

(h) The manufacturer shall perform test engine or vehicle selection, shipping, preparation, service or mileage accumulation, and testing in such a manner as to assure that the audit is performed in an expeditious manner.

(i) The manufacturer may retest any engines or vehicles tested during a Selective Enforcement Audit once a fail decision for the audit has been reached in accordance with § 86.1010–84(d) based on the first test on each engine or vehicle: *Except*, that the Administrator may approve retesting at other times based upon a request by the manufacturer accompanied by a satisfactory justification. The manufacturer may test each engine or vehicle a total of three times. The manufacturer shall test each engine or vehicle the same number of times. The manufacturer may accumulate additional service or mileage before conducting a retest, subject to the provisions of paragraph (c) of this section.

[54 FR 14560, Apr. 11, 1989, as amended at 57 FR 31922, July 17, 1992; 58 FR 16046, Mar. 24, 1993; 62 FR 47123, Sept. 5, 1997]

§ 86.1008–96 Test procedures.

Section 86.1008–96 includes text that specifies requirements that differ from § 86.1008–90. Where a paragraph in § 86.1008–90 is identical and applicable to § 86.1008–96, this is indicated by specifying the corresponding paragraph and the statement ''[Reserved]. For guidance see § 86.1008–90.'' Where a corresponding paragraph of § 86.1008–90 is not applicable, this is indicated by the statement ''[Reserved].''

(a)(1)(i) For heavy-duty engines, the prescribed test procedure is the Federal Test Procedure, as described in subparts N, I, and P of this part.

(ii) During the testing of heavy-duty diesel engines, the manufacturer shall decide for each engine, prior to the start of the initial cold cycle, whether the measurement of background particulate is required for the cold and hot cycles to be valid. The manufacturer may choose to have different requirements for the cold and hot cycles. If a manufacturer chooses to require the measurement of background particulate, failure to measure background particulate shall void the test cycle regardless of the test results. If a test cycle is void, the manufacturer shall retest using the same validity requirements of the initial test.

(2) For light-duty trucks, the prescribed test procedures are the FTP as described in subparts B, C, and P of this part and the CST as described in subpart O of this part. The manufacturer may not perform the evaporative emission test procedure contained in subpart B. The Administrator may, based on advance application by a manufacturer, approve optional test procedures for use in Selective Enforcement Audit Testing.

(3) [Reserved]. For guidance see § 86.1008–90.

(4) When testing light-duty trucks the following exception to the test procedures in subpart O of this part is applicable: manufacturer need not comply with § 86.1442, since the records required therein are provided under other provisions of subpart K of this part.

(ii) In addition to the requirements of subpart O of this part the manufacturer must prepare vehicles as described in paragraphs (a)(4)(ii) (A) through (C) of this section prior to exhaust emission testing.

(A) The manufacturer must inspect the fuel system to insure the absence of any leaks of liquid or vapor to the atmosphere by applying a pressure of 14.5 ±0.5 inches of water to the fuel system, allowing the pressure to stabilize, and isolating the fuel system from the pressure source. Pressure must not drop more than 2.0 inches of water in five minutes. If required, the manufacturer performs corrective action in accordance with this section and must report this action in accordance with § 86.1009.

(B) When performing this pressure check, the manufacturer must exercise care to neither purge nor load the evaporative system.

(C) The manufacturer may not modify the test vehicle's evaporative emission control system by component addition, deletion, or substitution.

(5) [Reserved]. For guidance see § 86.1008–90.

(6) The Administrator may select and prescribe the sequence of any CSTs. Further, the Administrator may, on the basis of a written application by a manufacturer, prescribe minor test procedure variations from those set forth in paragraphs (a) (1) and (2) of this section for any heavy-duty engine or light-duty truck.

(b) through (i) [Reserved]. For guidance see § 86.1008–90.

[58 FR 58425, Nov. 1, 1993, as amended at 62 FR 47123, Sept. 5, 1997]

§ 86.1008–97 Test procedures.

Section 86.1008–97 includes text that specifies requirements that differ from those specified in §§ 86.1008–90 and 86.1008–96. Where a paragraph in § 86.1008–90 or § 86.1008–96 is identical and applicable to § 86.1008–97, this may be indicated by specifying the corresponding paragraph and the statement ''[Reserved]. For guidance see § 86.1008–90.'' or ''[Reserved]. For guidance see § 86.1008–96.''

(a)(1) [Reserved]. For guidance see § 86.1008–96.

(2) For light-duty trucks, the prescribed test procedures are the Federal Test Procedure, as described in subpart B and/or subpart R of this part, whichever is applicable, the idle CO test procedure as described in subpart P of this part, the cold temperature CO test procedure as described in subpart C of this part, and the Certification Short Test procedure as described in subpart O of this part. Where the manufacturer conducts testing based on the requirements specified in Chapter 1 or Chapter 2 of the California Regulatory Requirements Applicable to the National Low Emission Vehicle Program (October, 1996), the prescribed test procedures are the procedures cited in the previous sentence, or substantially similar procedures, as determined by the Administrator. The California Regulatory Requirements Applicable to the National Low Emission Vehicle Program are incorporated by reference (see § 86.1). For purposes of Selective Enforcement Audit testing, the manufacturer shall not be required to perform any of the test procedures in subpart B of this part relating to evaporative emission testing, except as specified in paragraph (a)(3) of this section. The Administrator may select and prescribe the sequence of any Certification Short Tests. Further, the Administrator may, on the basis of a written application by a manufacturer, approve optional test procedures other than those in subparts B, C, P, and O of this part for any motor vehicle which is not susceptible to satisfactory testing using the procedures in subparts B, C, P, and O of this part.

(3) When testing light-duty trucks the following exceptions to the test procedures in subpart B and/or subpart R of this part are applicable:

(i) For mileage accumulation, the manufacturer may use test fuel meeting the specifications for mileage and service accumulation fuels of § 86.113–

94, or, for vehicles certified to the National LEV standards, the specifications of § 86.1771. Otherwise, the manufacturer may use fuels other than those specified in this section only with the advance approval of the Administrator.

(ii) [Reserved]. For guidance see § 86.1008–90.

(iii) The manufacturer may perform additional preconditioning on Selective Enforcement Audit test vehicles other than the preconditioning specified in § 86.132, or § 86.1773 for vehicles certified to the National LEV standards, only if the additional preconditioning had been performed on certification test vehicles of the same configuration.

(a)(3)(iv) through (a)(3)(vii) [Reserved]. For guidance see § 86.1008–90.

(a)(3)(viii) The manufacturer need not comply with § 86.142 or § 86.1775, since the records required therein are provided under other provisions of this subpart.

(a)(3)(ix) [Reserved]. For guidance see § 86.1008–90.

(a)(4) [Reserved]. For guidance see § 86.1008–96.

(5) [Reserved]. For guidance see § 86.1008–90.

(6) [Reserved]. For guidance see § 86.1008–96.

(b) through (i) [Reserved]. For guidance see § 86.1008–90.

[62 FR 31238, June 6, 1997]

§ 86.1008–2001 Test procedures.

(a)(1)(i) For heavy-duty engines, the prescribed test procedure is the Federal Test Procedure as described in subparts N, I, and P of this part. The Administrator, may on the basis of a written application by a manufacturer, approve optional test procedures other than those in subparts N, I, and P of this part for any heavy-duty vehicle which is not susceptible to satisfactory testing using the procedures in subparts N, I, and P of this part.

(ii) For heavy-duty vehicles the prescribed test procedures are the Fuel Dispensing Spitback Test as described in § 86.1246–96 (for HDVs with a GVW of less than 14,000 pounds (6,400 kilograms)); this test for fuel spitback is conducted as a stand alone test, thus all references to the test sequence described in figure M96–1 of subpart M of this part can be ignored. Further, the Administrator may, on the basis of a written application by a manufacturer, approve optional test procedures other than those in subpart M of this part for any heavy-duty vehicle which is not susceptible to satisfactory testing using the procedures in subpart M of this part.

(iii) During the testing of heavy-duty diesel engines, the manufacturer shall decide for each engine, prior to the start of the initial cold cycle, whether the measurement of background particulate is required for the cold and hot cycles to be valid. The manufacturer may choose to have different requirements for the cold and hot cycles. If a manufacturer chooses to require the measurement of background particulate, failure to measure background particulate shall void the test cycle regardless of the test results. If a test cycle is void, the manufacturer shall retest using the same validity requirements of the initial test.

(2) For light-duty trucks, the prescribed test procedures are the Federal Test Procedure as described in subpart B and/or subpart R of this part, whichever is applicable, the idle CO test procedure as described in subpart P of this part, the cold temperature CO test procedure as described in subpart C of this part, and the Certification Short Test procedure as described in subpart O of this part. For purposes of Selective Enforcement Audit Testing, the manufacturer shall not be required to perform any of the test procedures in subpart B of this part relating to evaporative emission testing, other than refueling emissions testing, except as specified in paragraph (a)(3) of this section. The Administrator may select and prescribe the sequence of any CSTs. Further, the Administrator may, on the basis of a written application by a manufacturer, approve optional test procedures other than those in subparts B, C, P, O, and R of this part for any motor vehicle which is not susceptible to satisfactory testing using the procedures in subparts B, C, P, O, and R of this part.

(3) When testing light-duty trucks, the following exceptions to the test procedures in subpart B and/or subpart R of this part are applicable to Selective Enforcement Audit testing:

(i) For mileage accumulation, the manufacturer may use test fuel meeting the specifications for mileage and service accumulation fuels of § 86.113, or, for vehicles certified to the National LEV standards, the specifications of § 86.1771. Otherwise, the manufacturer may use fuels other than those specified in this section only with the advance approval of the Administrator.

(ii) The manufacturer may measure the temperature of the test fuel at other than the approximate mid-volume of the fuel tank, as specified in § 86.131–96(a) with only a single temperature sensor, and may drain the test fuel from other than the lowest point of the tank, as specified in § 86.131–96(b) and § 86.152–98(a), provided an equivalent method is used. Equivalency documentation shall be maintained by the manufacturer and shall be made available upon request.

(iii) The manufacturer may perform additional preconditioning on SEA test vehicles other than the preconditioning specified in § 86.132, or § 86.1773 for vehicles certified to the National LEV standards, only if the additional preconditioning was performed on certification test vehicles of the same configuration.

(iv) If the Administrator elects to use the evaporative/refueling canister preconditioning procedure described in § 86.132–96(k), the manufacturer shall perform the heat build procedure 11 to 34 hours following vehicle preconditioning rather than according to the time period specified in § 86.133–90(a). All references to an evaporative emission enclosure and analyzing for HC during the heat build can be ignored.

(v) The manufacturer may substitute slave tires for the drive wheel tires on the vehicle as specified in paragraph § 86.135–90(e): *Provided,* that the slave tires are the same size.

(vi) If the Administrator elects to use the evaporative/refueling canister preconditioning procedure described in § 86.132–96(k), the cold start exhaust emission test described in § 86.137–96 shall follow the heat build procedure described in § 86.133–90 by not more than one hour.

(vii) In performing exhaust sample analysis under § 86.140–94.

(A) When testing diesel vehicles, or methanol-fueled Otto-cycle vehicles, the manufacturer shall allow a minimum of 20 minutes warm-up for the HC analyzer, and for diesel vehicles, a minimum of two hours warm-up for the CO, CO_2. and NO_X analyzers. (Power is normally left on infrared and chemiluminescent analyzers. When not in use, the chopper motors of the infrared analyzers are turned off and the phototube high voltage supply to the chemiluminescent analyzers is placed in the standby position.)

(B) The manufacturer shall exercise care to prevent moisture from condensing in the sample collection bags.

(viii) The manufacturer need not comply with § 86.142, § 86.155, or § 86.1775 since the records required therein are provided under other provisions of this subpart K.

(ix) If a manufacturer elects to perform the background determination procedure described in paragraph (a)(3)(xi) of this section in addition to performing the refueling emissions test procedure, the elapsed time between the initial and final FID readings shall be recorded, rounded to the nearest second rather than minute as described in § 86.154–98(e)(8). In addition, the vehicle soak described in § 86.153–98(e) shall be conducted with the windows and luggage compartment of the vehicle open.

(x) The Administrator may elect to perform a seal test, described in § 86.153–98(b), of both integrated and non-integrated systems instead of the full refueling test. When testing non-integrated systems, a manufacturer may conduct the canister purge described in § 86.153–98(b)(1) directly following the preconditioning drive described in § 86.132–96(e) or directly following the exhaust emissions test described in § 86.137–96.

(xi) In addition to the refueling test, a manufacturer may elect to perform the following background emissions determination immediately prior to the refueling measurement procedure described in § 86.154–98, provided EPA is notified of this decision prior to the start of testing in an SEA.

(A) The SHED shall be purged for several minutes immediately prior to

the background determination. Warning: If at any time the concentration of hydrocarbons, of methanol, or of methanol and hydrocarbons exceeds 15,000 ppm C, the enclosure should be immediately purged. This concentration provides a 4:1 safety factor against the lean flammability limit.

(B) The FID (or HFID) hydrocarbon analyzer shall be zeroed and spanned immediately prior to the background determination. If not already on, the enclosure mixing fan and the spilled fuel mixing blower shall be turned on at this time.

(C) Place the vehicle in the SHED. The ambient temperature level encountered by the test vehicle during the entire background emissions determination shall be 80 °F ±3 °F. The windows and luggage compartment of the vehicle must be open and the gas cap must be secured.

(D) Seal the SHED. Immediately analyze the ambient concentration of hydrocarbons in the SHED and record. This is the initial background hydrocarbon concentration.

(E) Soak the vehicle for ten minutes ±1 minute.

(F) The FID (or HFID) hydrocarbon analyzer shall be zeroed and spanned immediately prior to the end of the background determination.

(G) Analyze the ambient concentration of hydrocarbons in the SHED and record. This is the final background hydrocarbon concentration.

(H) The total hydrocarbon mass emitted during the background determination is calculated according to § 86.156–98. To obtain a per-minute background emission rate, divide the total hydrocarbon mass calculated in this paragraph by the duration of the soak, rounded to the nearest second, described in paragraph (a)(3)(xi)(G) of this section.

(I) The background emission rate is multiplied by the duration of the refueling measurement obtained in paragraph (a)(3)(ix) of this section. This number is then subtracted from the total grams of emissions calculated for the refueling test according to § 86.156–98(a) to obtain the adjusted value for total refueling emissions. The final results for comparison with the refueling emission standard shall be computed by dividing the adjusted value for total refueling mass emissions by the total gallons of fuel dispensed in the refueling test as described in § 86.156–98(b).

(xii) In addition to the requirements of subpart B of this part, the manufacturer shall prepare gasoline-fueled and methanol-fueled vehicles as follows prior to emission testing:

(A) The manufacturer shall inspect the fuel system to ensure the absence of any leaks of liquid or vapor to the atmosphere by applying a pressure of 14.5±0.5 inches of water (3.6±0.1 Kpa) to the fuel system allowing the pressure to stabilize and isolating the fuel system from the pressure source. Following isolation of the fuel system, pressure must not drop more than 2.0 inches of water (0.5 Kpa) in five minutes. If required, the manufacturer shall perform corrective action in accordance with paragraph (d) of this section and report this action in accordance with § 86.1009–2001(d).

(B) When performing this pressure check, the manufacturer shall exercise care to neither purge nor load the evaporative or refueling emission control systems.

(C) The manufacturer may not modify the test vehicle's evaporative or refueling emission control systems by component addition, deletion, or substitution, except to comply with paragraph (a)(3)(ii) of this section if approved in advance by the Administrator.

(4) When testing light-duty trucks, the following exceptions to the test procedures in subpart C of this part are applicable to Selective Enforcement Audit testing:

(i) The manufacturer may measure the temperature of the test fuel at other than the approximate mid-volume of the fuel tank, as specified in § 86.131–90(a), and may drain the test fuel from other than the lowest point of the fuel tank as specified in § 86.131–90(b), provided an equivalent method is used. Equivalency documentation shall be maintained by the manufacturer and shall be made available to the Administrator upon request.

(ii) In performing exhaust sample analysis under § 86.140–94, the manufacturer shall exercise care to prevent

moisture from condensing in the sample collection bags.

(iii) The manufacturer need not comply with § 86.142–90 since the records required therein are provided under other provisions of this subpart K.

(iv) In addition to the requirements of subpart C of this part, the manufacturer shall prepare gasoline-fueled vehicles as follows prior to exhaust emission testing:

(A) The manufacturer shall inspect the fuel system to ensure the absence of any leaks of liquid or vapor to the atmosphere by applying a pressure of 14.5±0.5 inches of water (3.6±0.1 Kpa) to the fuel system allowing the pressure to stabilize and isolating the fuel system from the pressure source. Following isolation of the fuel system, pressure must not drop more than 2.0 inches of water (0.5 Kpa) in five minutes. If required, the manufacturer shall perform corrective action in accordance with paragraph (d) of this section and report this action in accordance with § 86.1009–2001(d).

(B) When performing this pressure check, the manufacturer shall exercise care to neither purge nor load the evaporative or refueling emission control system.

(C) The manufacturer shall not modify the test vehicle's evaporative or refueling emission control system by component addition, deletion, or substitution, except if approved in advance by the Administrator, to comply with paragraph (a)(4)(ii) of this section.

(5) When testing light-duty trucks, the exceptions to the test procedures in subpart O of this part applicable to Selective Enforcement Audit testing are listed in paragraphs (a)(5) (i) and (ii) of this section.

(i) The manufacturer need not comply with § 86.1442, since the records required therein are provided under provisions of this subpart K.

(ii) In addition to the requirements of subpart O of this part, the manufacturer must prepare vehicles as in paragraphs (a)(5)(ii) (A) through (C) of this section prior to exhaust emission testing.

(A) The manufacturer must inspect the fuel system to insure the absence of any leaks of liquid or vapor to the atmosphere by applying a pressure of 14.5±0.5 inches of water (3.6±0.1 Kpa) to the fuel system, allowing the pressure to stabilize, and isolating the fuel system from the pressure source. Pressure must not drop more than 2.0 inches of water (0.5 Kpa) in five minutes. If required, the manufacturer performs corrective action in accordance with this section and must report this action in accordance with § 86.1009–2001.

(B) When performing this pressure check, the manufacturer must exercise care to neither purge nor load the evaporative or refueling emission control system.

(C) The manufacturer may not modify the test vehicle's evaporative or refueling emission control system by component addition, deletion, or substitution.

(b)(1) The manufacturer shall not adjust, repair, prepare, or modify the vehicles selected for testing and shall not perform any emission tests on vehicles selected for testing pursuant to the test order unless this adjustment repair, preparation, modification, and/or tests are documented in the manufacturer's vehicle assembly and inspection procedures and are actually performed or unless these adjustments and/or tests are required or permitted under this subpart or are approved in advance by the Administrator.

(2) For 1984 and later model years the Administrator may adjust or cause to be adjusted any engine or vehicle parameter which the Administrator has determined to be subject to adjustment for certification, Selective Enforcement Audit testing, and Production Compliance Audit testing in accordance with § 86.090–22(c)(1), to any setting within the physically adjustable range of that parameter, as determined by the Administrator in accordance with § 86.090–22(e)(3)(ii), prior to the performance of any tests. However, if the idle speed parameter is one which the Administrator has determined to be subject to adjustment, the Administrator shall not adjust it to a setting which causes a lower engine idle speed than will be possible within the physically adjustable range of the idle speed parameter if the manufacturer had accumulated 125 hours of service

on the engine or 4,000 miles on the vehicle under paragraph (c) of this section, all other parameters being identically adjusted for the purpose of comparison. The manufacturer may be requested to supply information to establish such an alternative minimum idle speed. The Administrator, in making or specifying such adjustments, will consider the effect of the deviation from the manufacturer's recommended setting on emissions performance characteristics as well as the likelihood that similar settings will occur on in-use heavy-duty engines or light-duty trucks. In determining likelihood, the Administrator will consider factors such as, but not limited to, the effect of the adjustment on engine or vehicle performance characteristics and surveillance information from similar in-use vehicles.

(c) Prior to performing emission testing on an SEA test engine, the manufacturer may accumulate on each engine a number of hours of service equal to the greater of 125 hours or the number of hours the manufacturer accumulated during certification on the emission-data engine corresponding to the configuration specified in the test order. Prior to performing emission testing on an SEA test vehicle, the manufacturer may accumulate on each vehicle a number of miles equal to the greater of 4,000 miles, or the number of miles the manufacturer accumulated during certification on the emission-data vehicle corresponding to the configuration specified in the test order.

(1) Service or mileage accumulation must be performed in a manner using good engineering judgment to obtain emission results representative of normal production vehicles. This service or mileage accumulation must be consistent with the new vehicle break-in instructions contained in the applicable vehicle owner's manual, if any.

(2) The manufacturer shall accumulate service at a minimum rate of 16 hours per engine or mileage at a minimum rate of 300 miles per vehicle during each 24-hour period, unless otherwise provided by the Administrator.

(i) The first 24-hour period for service or mileage accumulation shall begin as soon as authorization checks, inspections and preparations are completed on each engine or vehicle.

(ii) The minimum service or mileage accumulation rate does not apply on weekends or holidays.

(iii) If the manufacturer's service or mileage accumulation target is less than the minimum rate specified (16 hours or 300 miles per day), then the minimum daily accumulation rate shall be equal to the manufacturer's service or mileage accumulation target.

(3) Service or mileage accumulation shall be completed on a sufficient number of test engines or vehicles during consecutive 24-hour periods to assure that the number of engines or vehicles tested per day fulfills the requirements of paragraph (g) of this section.

(d) The manufacturer shall not perform any maintenance on test vehicles or engines after selection for testing, nor shall the Administrator allow deletion of any test vehicle or engine from the test sequence, unless requested by the manufacturer, and approved by the Administrator before any test vehicle or engine maintenance or deletion.

(e) The manufacturer shall expeditiously ship test engines or vehicles from the point of selection to the test facility. If the test facility is not located at or in close proximity to the point of selection, the manufacturer shall assure that the test engines or vehicles arrive at the test facility within 24 hours of selection: *Except,* that the Administrator may approve more time based upon a request by the manufacturer accompanied by a satisfactory justification.

(f) If an engine or vehicle cannot complete the service or mileage accumulation or emission test because of a malfunction, the manufacturer may request that the Administrator authorize the repair of that engine or vehicle or its deletion from the test sequence.

(g) Whenever the manufacturer conducts testing pursuant to a test order issued under this subpart, the manufacturer shall notify the Administrator within one working day of receipt of the test order, which test facility will be used to comply with the test order and the number of available test cells at that facility. If no test cells are available at the desired facility, the

manufacturer must provide alternate testing capability satisfactory to the Administrator.

(1) Heavy-duty engine manufacturers with projected sales for the United States market for that year of 30,000 or greater shall complete emission testing at their facility on a minimum of two engines per 24-hour period, including each voided test and each diesel engine smoke test.

(2) Heavy-duty engine manufacturers with projected sales for the United States market for that year of less than 30,000 shall complete emission testing at their facility on a minimum of one engine per 24-hour period, including each voided test and each diesel engine smoke test.

(3) Light-duty truck and heavy-duty vehicle manufacturers shall perform a combination of tests pursuant to paragraph (a) of this section so that a minimum of four tests are performed per 24 hour period, including voided tests, for each available test cell.

(4) The Administrator may approve a longer period based upon a request by a manufacturer accompanied by satisfactory justification.

(h) The manufacturer shall perform test engine or vehicle selection, shipping, preparation, service or mileage accumulation, and testing in such a manner as to assure that the audit is performed in an expeditious manner.

(i) The manufacturer may retest any test vehicle or engine after a fail decision has been reached in accordance with § 86.1010–2001(d) based on the first test on each vehicle or engine; except that the Administrator may approve retests at other times during the audit based upon a request by the manufacturer accompanied by a satisfactory justification. The manufacturer may test each vehicle or engine a total of three times. The manufacturer shall test each vehicle or engine the same number of times. The manufacturer may accumulate additional service or mileage before conducting retests, subject to the provisions of paragraph (c) of this section.

[59 FR 16305, Apr. 6, 1994, as amended at 62 FR 31239, June 6, 1997; 62 FR 47123, Sept. 5, 1997]

§ 86.1008–2004 Test procedures.

Section 86.1008–2004 includes text that specifies requirements that differ from § 86.1008–2001. Where a paragraph in § 86.1008–2001 is identical and applicable to § 86.1008–2004, this may be indicated by specifying the corresponding paragraph and the statement ''[Reserved]. For guidance see § 86.1008–2001.''.

(a)(1)(i) For heavy-duty engines, the prescribed test procedure is the Federal Test Procedure as described in subparts N, I, and P of this part, except that 2004 and later model year engines shall not be subject to the test procedures specified in § 86.1380, and 2007 and later model year engines shall not be subject to the test procedures specified in §§ 86.1360(b)(2), 86.1360(f), 86.1370, and 86.1372. The Administrator may, on the basis of a written application by a manufacturer, approve optional test procedures other than those in subparts N, I, and P of this part for any heavy-duty vehicle which is not susceptible to satisfactory testing using the procedures in subparts N, I, and P of this part.

(a)(1)(ii) through (i) [Reserved]. For guidance see § 86.1008–2001.

[65 FR 59957, Oct. 6, 2000]

§ 86.1009–84 Calculation and reporting of test results.

(a) Initial test results are calculated following the Federal Test Procedure specified in § 86.1008–94(a). Round the initial test results to the number of decimal places contained in the applicable emission standard, expressed to one additional significant figure. Rounding shall be done in accordance with ASTM E 29–90, Standard Practice for Using Significant Digits in Test Data to Determine Conformance with Specifications. This procedure has been incorporated by reference (see § 86.1).

(b) Final test results for each test vehicle shall be calculated by summing the initial test results derived in paragraph (a) of this section for each test engine or vehicle, dividing by the number of tests conducted on the engine or vehicle, and rounding to the same number of decimal places contained in the applicable emission standard, expressed to one additional significant

figure. Rounding shall be done in accordance with ASTM E 29–90, Standard Practice for Using Significant Digits in Test Data to Determine Conformance with Specifications. This procedure has been incorporated by reference (see § 86.1).

(c) *Final deteriorated test results.* (1) The final deteriorated test results for each heavy-duty engine or light-duty truck tested according to subpart B, C, D, N, or P of this part are calculated by either adding or multiplying, as specified in subpart A of this part for the applicable engine family control system combination, the appropriate deterioration factor to the final test results for each vehicle or engine.

(2) The final deteriorated test results for each heavy-duty engine tested according to subpart I of this part are calculated by adding the appropriate deterioration factor, derived from the certification process for the engine family-control system combination and model year for the selected configuration to which the test engine belongs, to the final test results. If the deterioration factor computed during the certification process is less than zero, that deterioration factor will be zero.

(3) There are no deterioration factors for light-duty trucks tested in accordance with § 86.146–96 of subpart B of this part or for heavy-duty vehicles tested in accordance with § 86.1246–96 of subpart M of this part. Accordingly, for the Fuel Dispensing Spitback Test the term ''final deteriorated test results'' shall mean the final test results derived in paragraph (b) of this section for each test vehicle, rounded to the same number of significant figures contained in the applicable standard in accordance with ASTM E 29–90, Standard Practice for Using Significant Digits in Test Data to Determine Conformance with Specifications. This procedure has been incorporated by reference (see § 86.1).

(4) The final deteriorated test results are rounded to the same number of significant figures contained in the applicable standard in accordance with ASTM E 29–90, Standard Practice for Using Significant Digits in Test Data to Determine Conformance with Specifications. This procedure has been incorporated by reference (see § 86.1).

(d) Within five working days after completion of testing of all engines or vehicles pursuant to a test order, the manufacturer shall submit to the Administrator a report which includes the following information:

(1) The location and description of the manufacturer's exhaust emission test facilities which were utilized to conduct testing reported pursuant to this section;

(2) The applicable standards or compliance levels against which the engines or vehicles were tested;

(3) Deterioration factors for the engine family to which the selected configuration belongs;

(4) A description of the engine or vehicle and any emission-related component selection method used;

(5) For each test conducted,

(i) Test engine or vehicle description, including:

(A) Configuration and engine family identification,

(B) Year, make and build date,

(C) Engine or vehicle identification number, and

(D) Number of hours of service accumulated on engine or number of miles on vehicle prior to testing;

(ii) Location where service or mileage accumulation was conducted and description of accumulation procedure and schedule;

(iii) Test number, date, initial test results before and after rounding, final test results and final deteriorated test results for all exhaust emission tests, whether valid or invalid, and the reason for invalidation, if applicable;

(iv) A complete description of any modification, repair, preparation, maintenance, and/or testing which was performed on the test engine or vehicle and has not been reported pursuant to any other paragraph of this subpart and will not be performed on all other production engines or vehicles;

(v) Where an engine or vehicle was deleted from the test sequence by authorization of the Administrator, the reason for the deletion;

(vi) For all valid and invalid exhaust emission tests, carbon dioxide emission values for LDTs and brake-specific fuel consumption values for HDEs; and

(vii) Any other information the Administrator may request relevant to the determination as to whether the new heavy-duty engines or light-duty trucks being manufactured by the manufacturer do in fact conform with the regulations with respect to which the certificate of conformity was issued; and

(6) The following statement and endorsement:

This report is submitted pursuant to Sections 206 and 208 of the Clean Air Act. This Selective Enforcement Audit was conducted in complete conformance with all applicable regulations under 40 CFR part 86 *et seq.*, and the conditions of the test order. No emission-related changes to production processes or quality control procedures for the vehicle or engine configuration tested have been made between receipt of the test order and conclusion of the audit. All data and information reported herein is, to the best of

(Company Name)

knowledge, true and accurate. I am aware of the penalties associated with violations of the Clean Air Act and the regulations thereunder.

(Authorized Company Representative)

[45 FR 63772, Sept. 25, 1980, as amended at 48 FR 52209, Nov. 16, 1983; 50 FR 35387, Aug. 30, 1985; 57 FR 31923, July 17, 1992; 58 FR 16046, Mar. 24, 1993]

§ 86.1009–96 Calculation and reporting of test results.

Section 86.1009–96 includes text that specifies requirements that differ from § 86.1009–84. Where a paragraph in § 86.1009–84 is identical and applicable to § 86.1009–96, this is indicated by specifying the corresponding paragraph and the statement ''[Reserved]. For guidance see § 86.1009–84.'' Where a corresponding paragraph of § 86.1009–84 is not applicable, this is indicated by the statement ''[Reserved].''

(a) Initial test results are calculated following the test procedures specified in § 86.1008(a). Round these results to the number of decimal places contained in the applicable emission standard expressed to one additional significant figure. Rounding is done in accordance with ASTM E 29–90, Standard Practice for Using Significant Digits in Test Data to Determine Conformance with Specifications. This procedure has been incorporated by reference (see § 86.1).

(b) Final test results are calculated by summing the initial test results within a specific FTP, CST, or Cold Temperature CO Test Procedure derived in paragraph (a) of this section for each test engine or vehicle, dividing by the number of times that specific FTP, CST, or Cold Temperature CO Test Procedure has been conducted on the engine or vehicle, and rounding in accordance with ASTM E29–90 to the same number of decimal places contained in the applicable standard expressed to one additional significant figure. Rounding is done in accordance with ASTM E 29–90, Standard Practice for Using Significant Digits in Test Data to Determine Conformance with Specifications. This procedure has been incorporated by reference (see § 86.1).

(c) *Final deteriorated test results.* (1) The final deteriorated test results for each heavy-duty engine or light-duty truck tested according to subpart B, C, D, I, N, or P of this part are calculated by multiplying or adding the final test results by the appropriate deterioration factor, derived from the certification process for the engine family-control system combination and model year for the selected configuration to which the test engine or vehicle belongs. If the multiplicative deterioration factor as computed during the certification process is less than one, that deterioration factor is one. If the additive deterioration factor as computed during the certification process is less than zero, that deterioration factor will be zero.

(2) [Reserved]

(3)(i) There are no deterioration factors for light-duty vehicles tested in accordance with subpart O of this part. Accordingly, for the CST the term ''final deteriorated test results'' means the final test results derived in paragraph (b) of this section for each test vehicle.

(ii) There are no deterioration factors for light-duty trucks tested in accordance with § 86.146–96 or for heavy-duty vehicles tested in accordance with § 86.1246–96. Accordingly, for the Fuel Dispensing Spitback Test the term ''final deteriorated test results'' means

the final test results derived in paragraph (b) of this section for each test vehicle.

(4) The final deteriorated test results are rounded to the same number of significant figures contained in the applicable standard in accordance with ASTM E 29–90, Standard Practice for Using Significant Digits in Test Data to Determine Conformance with Specifications. This procedure has been incorporated by reference (see § 86.1).

(d) [Reserved]. For guidance see § 86.1009–84.

[58 FR 58425, Nov. 1, 1993]

§ 86.1009–97 Calculation and reporting of test results.

Section 86.1009–97 includes text that specifies requirements that differ from those specified in §§ 86.1009–84 and 86.1009–96. Where a paragraph in § 86.1009–84 or § 86.1009–96 is identical and applicable to § 86.1009–97, this may be indicated by specifying the corresponding paragraph and the statement ''[Reserved]. For guidance see § 86.1009–84.'' or ''[Reserved]. For guidance see § 86.1009–96.''.

(a) and (b) [Reserved]. For guidance see § 86.1009–96.

(c) *Final deteriorated test results.* (1) The final deteriorated test results for each heavy-duty engine or light-duty truck tested according to subpart B, C, D, I, N, P, or R of this part are calculated by first multiplying or adding, as appropriate, the final test results by or to the appropriate deterioration factor derived from the certification process for the engine family control system combination and model year to which the selected configuration belongs, and then by multiplying by the appropriate reactivity adjustment factor, if applicable. If the multiplicative deterioration factor as computed during the certification process is less than one, that deterioration factor will be one. If the additive deterioration factor as computed during the certification process is less than zero, that deterioration factor will be zero.

(c)(2) [Reserved]

(c)(3) through (c)(4) [Reserved]. For guidance see § 86.1009–96.

(d) [Reserved]. For guidance see § 86.1009–84.

[62 FR 31239, June 6, 1997]

§ 86.1009–2001 Calculation and reporting of test results.

(a) Initial test results are calculated following the Federal Test Procedure specified in § 86.1008–2001(a). Rounding is done in accordance with ASTM E 29–67 (reapproved 1980) (as referenced in § 86.094–28 (a)(4)(i)(B)(*2*)(*ii*) to the number of decimal places contained in the applicable emission standard expressed to one additional significant figure.

(b) Final test results are calculated by summing the initial test results derived in paragraph (a) of this section for each test vehicle or engine, dividing by the number of times that specific test has been conducted on the vehicle or engine, and rounding to the same number of decimal places contained in the applicable standard expressed to one additional significant figure. Rounding is done in accordance with ASTM E 29–67 (reapproved 1980) (as referenced in § 86.094–28(a)(4)(i)(B)(*2*)(*ii*)).

(c) *Final deteriorated test results.* (1) The final deteriorated test results for each light-duty truck, heavy-duty engine, or heavy-duty vehicle tested according to subpart B, C, D, I, M, N, P, or R of this part are calculated by first multiplying or adding, as appropriate, the final test results by or to the appropriate deterioration factor derived from the certification process for the engine or evaporative/refueling family and model year to which the selected configuration belongs, and then by multiplying by the appropriate reactivity adjustment factor, if applicable. For the purpose of this paragraph (c), if a multiplicative deterioration factor as computed during the certification process is less than one, that deterioration factor will be one. If an additive deterioration factor as computed during the certification process is less than zero, that deterioration factor will be zero.

(2) *Exceptions.* There are no deterioration factors for light-duty truck emissions obtained during testing in accordance with subpart O of this part or with § 86.146–96. Accordingly, for the CST and the fuel dispensing spitback test the term ''final deteriorated test

results'' means the final test results derived in paragraph (b) of this section for each test vehicle.

(3) The final deteriorated test results obtained in paragraph (c) (1) and (2) of this section are rounded to the same number of decimal places contained in the applicable emission standard. Rounding is done in accordance with ASTM E 29–67 (reapproved 1980) (as referenced in § 86.094–28(a)(4)(i)(B)(*2*)(*ii*)).

(d) Within five working days after completion of testing of all engines or vehicles pursuant to a test order, the manufacturer shall submit to the Administrator a report which includes the following information:

(1) The location and description of the manufacturer's emission test facilities which were utilized to conduct testing reported pursuant to this section.

(2) The applicable standards or compliance levels against which the engines or vehicles were tested.

(3) Deterioration factors for the selected configuration.

(4) A description of the engine or vehicle and any emission-related component selection method used.

(5) For each test conducted.

(i) Test engine or vehicle description including:

(A) Configuration, engine family, and evaporative/refueling family identification.

(B) Year, make, build date, and model of vehicle.

(C) Vehicle Identification Number.

(D) Miles accumulated on vehicle.

(ii) Location where mileage accumulation was conducted and description of accumulation schedule.

(iii) Test number, date initial test results, final results and final deteriorated test results for all valid and invalid exhaust emission tests, and the reason for invalidation, if applicable.

(iv) A complete description of any modification, repair, preparation, maintenance and/or testing which was performed on the test engine or vehicle and has not been reported pursuant to any other paragraph of this subpart and will not be performed on all other production engines or vehicles.

(v) Where an engine or vehicle was deleted from the test sequence by authorization of the Administrator, the reason for the deletion.

(vi) For all valid and invalid exhaust emission tests, carbon dioxide emission values for LDTs and brake-specific fuel consumption values for HDEs.

(vii) Any other information the Administrator may request relevant to the determination as to whether the new motor vehicles being manufactured by the manufacturer do in fact conform with the regulations with respect to which the certificate of conformity was issued.

(6) The following statement and endorsement:

This report is submitted pursuant to sections 206 and 208 of the Clean Air Act. This Selective Enforcement Audit was conducted in complete conformance with all applicable regulations under 40 CFR part 86 and the conditions of the test order. No emission related change(s) to production processes or quality control procedures for the engine or vehicle configuration tested have been made between receipt of this test order and conclusion of the audit. All data and information reported herein is, to the best of

_____

(Company Name)

knowledge, true and accurate. I am aware of the penalties associated with violations of the Clean Air Act and the regulations thereunder.

_____

(Authorized Company Representative)

[59 FR 16308, Apr. 6, 1994, as amended at 62 FR 31239, June 6, 1997]

§ 86.1010–96 Compliance with acceptable quality level and passing and failing criteria for Selective Enforcement Audits.

(a) The prescribed acceptable quality level is 40 percent.

(b) A failed engine or vehicle is one whose final deteriorated test results pursuant to § 86.1009(c), for one or more of the applicable pollutants, including fuel spitback, exceed the applicable emission standard or compliance level. For the CST as described in subpart O of this part, a vehicle fail determination is made if the final deteriorated test results for HC and/or CO emissions from any CST exceed the applicable emission standard.

(c) *Pass/fail criteria.* (1) The manufacturer must test heavy-duty engines, heavy duty vehicles, or light-duty

trucks comprising the test sample until a pass decision is reached for all pollutants, or a fail decision is reached for one pollutant. A pass decision is reached when the cumulative number of failed engines or vehicles, as defined in paragraph (b) of this section, for each pollutant is less than or equal to the pass decision number appropriate to the cumulative number of engines or vehicles tested. A fail decision is reached when the cumulative number of failed engines or vehicles for one or more pollutants is greater than or equal to the fail decision number appropriate to the cumulative number of engines or vehicles tested. The pass and fail decision numbers associated with the cumulative number of engines or vehicles tested are determined by use of the tables in appendix X to this part appropriate to the projected sales as made by the heavy-duty engine or heavy-duty vehicle manufacturer in its Application for Certification, or as made by the light-duty truck manufacturer as made in its report submitted under § 600.207–80(a)(2) of this chapter (Automobile Fuel Economy Regulations). In the tables in appendix X to this part, sampling plan ''stage'' refers to the cumulative number of engines or vehicles tested. Once a pass or fail decision has been made for a particular pollutant, the number of engines or vehicles whose final deteriorated test results exceed the emission standard or compliance level, if applicable, for that pollutant may not be considered any further for purposes of the audit.

(2) *CST criteria only*. A pass/fail decision is made based on the CST in its entirety rather than on a per pollutant basis. The manufacturer must test vehicles comprising the test sample until a pass or fail decision is reached for the CST. A pass decision is reached when the cumulative number of failed vehicles, as defined in paragraph (b) of this section, based on CST testing, is less than or equal to the pass decision number appropriate to the cumulative number of vehicles tested. A fail decision is reached when the cumulative number of failed vehicles based on CST testing is greater than or equal to the fail decision number appropriate to the cumulative number of vehicles tested. The pass and fail decision numbers associated with the cumulative number of vehicles tested are determined by use of the tables in appendix X to this part appropriate to the projected sales as made by the light-duty truck manufacturer as made in its report submitted under § 600.207–80(a)(2) of this chapter (Automobile Fuel Economy Regulations). In the tables in appendix X to this part, sampling plan ''stage'' refers to the cumulative number of engines or vehicles tested. Once a pass or fail decision has been made based on CST testing, the number of vehicles whose final deteriorated test results exceed any of the emission standards for any CST may not be considered any further for purposes of the audit.

(d) Passing or failing of a SEA occurs when the decision is made on the last engine or vehicle required to make a decision under paragraph (c) of this section.

(e) The Administrator may terminate testing earlier than required in paragraph (c) of this section.

[58 FR 58426, Nov. 1, 1993]

§ 86.1010–2001 Compliance with acceptable quality level and passing and failing criteria for Selective Enforcement Audits.

(a) The prescribed acceptable quality level is 40 percent.

(b) A failed vehicle or engine is one whose final deteriorated test results pursuant to § 86.1009–2001(c) exceed at least one of the applicable emission standards associated with the test procedures pursuant to § 86.1008–2001(a).

(c)(1) *Pass/fail criteria*. The manufacturer shall test light-duty trucks, heavy-duty engines, or heavy-duty vehicles comprising the test sample until a pass decision is reached for all of the pollutants associated with all of the test procedures pursuant to § 86.1008–2001(a) or a fail decision is reached for one of these pollutants. A pass decision is reached when the cumulative number of failed vehicles or engines, as defined in paragraph (b) of this section, for each pollutant is less than or equal to the fail decision number appropriate to the cumulative number of vehicles tested. A fail decision is reached when the cumulative number of failed vehicles or engines for one pollutant is

greater than or equal to the fail decision number appropriate to the cumulative number of vehicles tested. The pass and fail decision numbers associated with the cumulative number of vehicles tested are determined by use of the tables in appendix X of this part appropriate to the projected sales as made by the heavy-duty engine or heavy-duty vehicle manufacturer in its Application for Certification, or as made by the light-duty truck manufacturer in its report submitted under § 600.207–80(a)(2) of this chapter (Automobile Fuel Economy Regulations). In the tables in appendix X of this part, sampling plan ''stage'' refers to the cumulative number of vehicles or engines tested. Once a pass decision has been made for a particular pollutant associated with a particular test procedure pursuant to § 86.1008–2001(a), the number of vehicles or engines whose final deteriorated test results exceed the emission standard for that pollutant may not be considered any further for purposes of the audit.

(2) *CST criteria only*. For CST testing pursuant to subpart O, a pass or fail decision is determined according to the pass/fail criteria described in paragraph (c)(1) of this section, except that for each vehicle, the CST in its entirety is considered one pollutant.

(d) Passing or failing of an SEA audit occurs when the decision is made on the last vehicle or engine required to make a decision under paragraph (c) of this section.

(e) The Administrator may terminate testing earlier than required in paragraph (c) of this section.

[59 FR 16309, Apr. 6, 1994]

§ 86.1012–84 Suspension and revocation of certificates of conformity.

(a) The certificate of conformity is suspended with respect to any engine or vehicle failing pursuant to paragraph (b) of § 86.1010–84 effective from the time that testing of that engine or vehicle is completed.

(b) The Administrator may suspend the certificate of conformity for a configuration which does not pass an SEA, pursuant to paragraph § 86.1010–84(c), based on the first test or all tests conducted on each engine or vehicle. This suspension will not occur before ten days after failure to pass the audit.

(c)–(d) [Reserved]

(e) If the results of testing pursuant to these regulations indicate that engines or vehicles of a particular configuration produced at one plant of a manufacturer do not conform to the regulations with respect to which the certificate of conformity was issued, the Administrator may suspend the certificate of conformity with respect to that configuration for engines or vehicles manufactured by the manufacturer at all other plants.

(f) [Reserved]

(g) The Administrator shall notify the manufacturer in writing of any suspension or revocation of a certificate of conformity in whole or in part: *Except*, That the certificate is immediately suspended with respect to any failed engines or vehicles as provided for in paragraph (a) of this section.

(h) The Administrator may revoke a certificate of conformity for a configuration when the certificate has been suspended pursuant to paragraph (b), (c) or (e) of this section if the proposed remedy for the nonconformity, as reported by the manufacturer to the Administrator, is one requiring a design change or changes to the engine and/or emission control system as described in the Application for Certification of the affected configuration.

(i) Once a certificate has been suspended for a failed engine or vehicle as provided for in paragraph (a) of this section, the manufacturer shall take the following actions:

(1) Before the certificate is reinstated for that failed engine or vehicle,

(i) Remedy the nonconformity, and

(ii) Demonstrate that the engine or vehicle conforms to applicable standards or compliance levels by retesting the engine or vehicle in accordance with these regulations; and

(2) Submit a written report to the Administrator, after successful completion of testing on the failed engine or vehicle, which contains a description of the remedy and test results for each engine or vehicle in addition to other information that may be required by this regulation.

(j) Once a certificate for a failed configuration has been suspended pursuant

to paragraph (b), (c) or (e) of this section, the manufacturer shall take the following actions before the Administrator will consider reinstating the certificate:

(1) Submit a written report to the Administrator which identifies the reason for the noncompliance of the engines or vehicles, describes the proposed remedy, including a description of any proposed quality control and/or quality assurance measures to be taken by the manufacturer to prevent future occurrences of the problem, and states the date on which the remedies will be implemented; and

(2) Demonstrate that the engine or vehicle configuration for which the certificate of conformity has been suspended does in fact comply with these regulations by testing engines or vehicles selected from normal production runs of that engine or vehicle configuration, at the plant(s) or associated storage facilities specified by the Administrator, in accordance with the conditions specified in the initial test order. If the manufacturer elects to continue testing individual engines or vehicles after suspension of a certificate, the certificate is reinstated for any engine or vehicle actually determined to be in conformance with the applicable standards or compliance levels through testing in accordance with the applicable test procedures, provided that the Administrator has not revoked the certificate pursuant to paragraph (h) of this section.

(k) Once the certificate has been revoked for a configuration and the manufacturer desires to continue introduction into commerce of a modified version of that configuration, the following actions shall be taken before the Administrator may consider issuing a certificate for that modified configuration:

(1) If the Administrator determines that the proposed change(s) in engine or vehicle design may have an effect on emission performance deterioration or, in the case of light-duty trucks, on fuel economy, the Administrator shall notify the manufacturer, within five (5) working days after receipt of the report in paragraph (h) of this section, whether subsequent testing under this subpart will be sufficient to evaluate the proposed change or changes or whether additional testing will be required; and

(2) After implementing the change or changes intended to remedy the nonconformity, the manufacturer shall demonstrate that the modified engine or vehicle configuration does in fact conform with these regulations by testing engines or vehicles selected from normal production runs of that modified engine or vehicle configuration in accordance with the conditions specified in the initial test order. This testing will be considered by the Administrator to satisfy the testing requirements of § 86.078–32 or § 86.079–33 if the Administrator has so notifed the manufacturer. If the subsequent audit results in passing of the audit at the level of the standards or compliance levels, if applicable, the Administrator shall reissue or amend the certificate, as the case may be, to include that configuration, provided that the manufacturer has satisfied the testing requirements of paragraph (k)(1) of this section. If the subsequent audit is failed, the revocation remains in effect. Any design change approvals under this subpart are limited to the configuration affected by the test order.

(l) At any time subsequent to an initial suspension of a certificate of conformity for a test engine or vehicle pursuant to paragraph (a) of this section, but not later than fifteen (15) days or such other period as may be allowed by the Administrator after notification of the Administrator's decision to suspend or revoke a certificate of conformity in whole or in part pursuant to paragraphs (b), (c), (d), (e), or (h) of this section, a manufacturer may request a hearing as to whether the tests have been properly conducted or any sampling methods have been properly applied.

(m) After the Administrator suspends or revokes a certificate of conformity pursuant to this section or notifies a manufacturer of his intent to suspend, revoke or void a certificate of conformity under paragraph § 86.087–30(e), and prior to the commencement of a hearing under § 86.1014–84, if the manufacturer demonstrates to the Administrator's satisfaction that the decision

to suspend, revoke or void the certificate was based on erroneous information, the Administrator shall reinstate the certificate.

(n) To permit a manufacturer to avoid storing non-test engines or vehicles when conducting an audit of a configuration subsequent to suspension or revocation of the certificate of conformity for that configuration resulting from failure of an SEA, it may request that the Administrator conditionally reinstate the certificate for that configuration. The Administrator may reinstate the certificate subject to the condition that the manufacturer consents to recall all engines or vehicles of that configuration produced from the time the certificate is conditionally reinstated if the configuration fails the subsequent audit at the level of the standard and to remedy any nonconformity at no expense to the owner.

[45 FR 63772, Sept. 25, 1980, as amended at 48 FR 52209, Nov. 16, 1983; 50 FR 35387, Aug. 30, 1985]

§ 86.1012–97 Suspension and revocation of certificates of conformity.

(a) The certificate of conformity is immediately suspended with respect to any engine or vehicle failing pursuant to § 86.1010(b) effective from the time that testing of that engine or vehicle is completed.

(b)(1) *Selective Enforcement Audits.* The Administrator may suspend the certificate of conformity for a configuration that does not pass a Selective Enforcement Audit pursuant to § 86.1010(c) based on the first test, or all tests, conducted on each engine or vehicle. This suspension will not occur before ten days after failure to pass the audit.

(2) *California Assembly-Line Quality Audit Testing.* The Administrator may suspend the certificate of conformity for a 50-state engine family or configuration tested in accordance with procedures prescribed under § 86.1008 that the Executive Officer has determined to be in non-compliance with one or more applicable pollutants based on Chapter 1 or Chapter 2 of the California Regulatory Requirements Applicable to the National Low Emission Vehicle Program (October, 1996), if the results of vehicle testing conducted by the manufacturer do not meet the acceptable quality level criteria pursuant to § 86.1010. The California Regulatory Requirements Applicable to the National Low Emission Vehicle Program (October, 1996) are incorporated by reference (see § 86.1). A vehicle that is tested by the manufacturer in accordance with procedures prescribed under § 86.1008 and determined to be a failing vehicle pursuant to Chapter 1 or Chapter 2 of the California Regulatory Requirements Applicable to the National Low Emission Vehicle Program (October, 1996) will be treated as a failed vehicle described in § 86.1010(b), unless the manufacturer can show that the vehicle would not be considered a failed vehicle using the test procedures specified in § 86.1008. This suspension will not occur before ten days after the manufacturer receives written notification that the Administrator has determined the 50-state engine family or configuration exceeds one or more applicable federal standards.

(c)(1) *Selective Enforcement Audits.* If the results of engine or vehicle testing pursuant to the requirements of this subpart indicate that engines or vehicles of a particular configuration produced at more than one plant do not conform to the regulations with respect to which the certificate of conformity was issued, the Administrator may suspend the certificate of conformity with respect to that configuration for engines or vehicles manufactured by the manufacturer in other plants of the manufacturer.

(2) *California Assembly-Line Quality Audit Testing.* If the Administrator determines that the results of vehicle testing pursuant to Chapter 1 or Chapter 2 of the California Regulatory Requirements Applicable to the National Low Emission Vehicle Program (October, 1996) and the procedures prescribed in § 86.1008 indicate the vehicles of a particular 50-state engine family or configuration produced at more than one plant do not conform to applicable regulations with respect to which a certificate of conformity was issued, the Administrator may suspend, pursuant to paragraph (b)(2) of this section, the certificate of conformity with respect to that engine family or configuration for vehicles manufactured by

the manufacturer in other plants of the manufacturer. The California Regulatory Requirements Applicable to the National Low Emission Vehicle Program (October, 1996) are incorporated by reference (see § 86.1).

(d) The Administrator will notify the manufacturer in writing of any suspension or revocation of a certificate of conformity in whole or in part: Except, that the certificate is immediately suspended with respect to any failed engines or vehicles as provided for in paragraph (a) of this section.

(e)(1) *Selective Enforcement Audits*. The Administrator may revoke a certificate of conformity for a configuration when the certificate has been suspended pursuant to paragraph (b)(1) or (c)(1) of this section if the proposed remedy for the nonconformity, as reported by the manufacturer to the Administrator is one requiring a design change(s) to the engine and/or emission control system as described in the Application for Certification of the affected configuration.

(2) *California Assembly-Line Quality Audit Testing*. The Administrator may revoke a certificate of conformity for an engine family or configuration when the certificate has been suspended pursuant to paragraph (b)(2) or (c)(2) of this section if the proposed remedy for the nonconformity, as reported by the manufacturer to the Executive Officer and/or the Administrator, is one requiring a design change(s) to the engine and/or emission control system as described in the Application for Certification of the affected engine family or configuration.

(f) Once a certificate has been suspended for a failed engine or vehicle as provided for in paragraph (a) of this section, the manufacturer must take the following actions:

(1) Before the certificate is reinstated for that failed engine or vehicle—

(i) Remedy the nonconformity; and

(ii) Demonstrate that the engine or vehicle's final deteriorated test results conform to the applicable emission standards or family particulate emission limits, as defined in this part 86 by retesting the engine or vehicle in accordance with the requirements of this subpart.

(2) Submit a written report to the Administrator within thirty days after successful completion of testing on the failed engine or vehicle, which contains a description of the remedy and test results for the engine or vehicle in addition to other information that may be required by this subpart.

(g) Once a certificate has been suspended pursuant to paragraph (b) or (c) of this section, the manufacturer must take the following actions before the Administrator will consider reinstating such certificate:

(1) Submit a written report to the Administrator which identifies the reason for the noncompliance of the vehicles, describes the proposed remedy, including a description of any proposed quality control and/or quality assurance measures to be taken by the manufacturer to prevent the future occurrence of the problem, and states the date on which the remedies will be implemented.

(2) Demonstrate that the engine family or configuration for which the certificate of conformity has been suspended does in fact comply with the requirements of this subpart by testing engines or vehicles selected from normal production runs of that engine family or configuration at the plant(s) or the facilities specified by the Administrator, in accordance with:

(i) The conditions specified in the initial test order pursuant to § 86.1003 for a configuration suspended pursuant to paragraph (b)(1) or (c)(1) of this section; or

(ii) The conditions specified in a test order pursuant to § 86.1003 for an engine family or configuration suspended pursuant to paragraph (b)(2) or (c)(2) of this section.

(3) If the Administrator has not revoked the certificate pursuant to paragraph (e) of this section and if the manufacturer elects to continue testing individual engines or vehicles after suspension of a certificate, the certificate is reinstated for any engine or vehicle actually determined to have its final deteriorated test results in conformance with the applicable standards through testing in accordance with the applicable test procedures.

(4) In cases where the Administrator has suspended a certificate of conformity for a 50-state engine family or configuration pursuant to paragraph (b)(2) or (c)(2) of this section, manufacturers may request in writing that the Administrator reinstate the certificate of an engine family or configuration when, in lieu of the actions described in paragraphs (g) (1) and (2) of this section, the manufacturer has complied with Chapter 3 of the California Regulatory Requirements Applicable to the National Low Emission Vehicle Program (October, 1996), provided an Executive Order is in place for the engine family or configuration. The California Regulatory Requirements Applicable to the National Low Emission Vehicle Program (October, 1996) are incorporated by reference (see § 86.1).

(h) Once a certificate for a failed engine family or configuration has been revoked under paragraph (e) (1) or (2) of this section and the manufacturer desires to introduce into commerce a modified version of that engine family or configuration the following actions will be taken before the Administrator may issue a certificate for the new engine family or configuration:

(1) If the Administrator determines that the proposed change(s) in engine or vehicle design may have an effect on emission performance deterioration and/or fuel economy, he/she shall notify the manufacturer within 5 working days after receipt of the report in paragraph (g)(1) of this section or after receipt of information pursuant to paragraph (g)(4) of this section whether subsequent testing under this subpart will be sufficient to evaluate the proposed change(s) or whether additional testing will be required.

(2) After implementing the change(s) intended to remedy the nonconformity, the manufacturer shall demonstrate:

(i) If the certificate was revoked pursuant to paragraph (e)(1) of this section, that the modified configuration does in fact conform with the requirements of this subpart by testing engines or vehicles selected from normal production runs of that modified configuration in accordance with the conditions specified in the initial test order pursuant to § 86.1003. The Administrator shall consider this testing to satisfy the testing requirements of § 86.079–32 or § 86.079–33 if the Administrator had so notified the manufacturer. If the subsequent testing results in a pass decision pursuant to the criteria in § 86.1010(c), the Administrator shall reissue or amend the certificate, if necessary, to include that configuration: *Provided*, that the manufacturer has satisfied the testing requirements specified in paragraph (h)(1) of this section. If the subsequent audit results in a fail decision pursuant to the criteria in § 86.1010(c), the revocation remains in effect. Any design change approvals under this subpart are limited to the modification of the configuration specified by the test order.

(ii) If the certificate was revoked pursuant to paragraph (e)(2) of this section, that the modified engine family or configuration does in fact conform with the requirements of this subpart by testing vehicles selected from normal production runs of that modified engine family or configuration in accordance with the conditions specified in a test order pursuant to § 86.1003. The Administrator shall consider this testing to satisfy the testing requirements of § 86.079–32 or § 86.079–33 if the Administrator had so notified the manufacturer. If the subsequent testing results in a pass decision pursuant to § 86.1010(c), the Administrator shall reissue or amend the certificate as necessary: *Provided*, that the manufacturer has satisfied the testing requirements specified in paragraph (h)(1) of this section. If the subsequent testing results in a fail decision pursuant to § 86.1010(c), the revocation remains in effect. Any design change approvals under this subpart are limited to the modification of the engine family or configuration specified by the test order.

(3) In cases where the Administrator has revoked a certificate of conformity for a 50-state engine family or configuration pursuant to paragraph (e)(2) of this section, manufacturers may request in writing that the Administrator reissue the certificate for an engine family or configuration when, in lieu of the actions described in paragraphs (h) (1) and (2) of this section, the manufacturer has complied with Chapter 3 of the California Regulatory

Requirements Applicable to the National Low Emission Vehicle Program (October, 1996), provided an Executive Order is in place for the engine family or configuration. The California Regulatory Requirements Applicable to the National Low Emission Vehicle Program (October, 1996) are incorporated by reference (see § 86.1).

(i) through (k) [Reserved]

(l) At any time subsequent to an initial suspension of a certificate of conformity for a test engine or vehicle pursuant to paragraph (a) of this section, but not later than fifteen (15) days or such other period as may be allowed by the Administrator after notification of the Administrator's decision to suspend or revoke a certificate of conformity in whole or in part pursuant to paragraphs (b), (c), (d), (e), or (h) of this section, a manufacturer may request a hearing as to whether the tests have been properly conducted or any sampling methods have been properly applied.

(m) After the Administrator suspends or revokes a certificate of conformity pursuant to this section or notifies a manufacturer of his intent to suspend, revoke or void a certificate of conformity under paragraph § 86.087–30(e), and prior to the commencement of a hearing under § 86.1014, if the manufacturer demonstrates to the Administrator's satisfaction that the decision to suspend, revoke or void the certificate was based on erroneous information, the Administrator shall reinstate the certificate.

(n) To permit a manufacturer to avoid storing non-test engines or vehicles when conducting testing of an engine family or configuration subsequent to suspension or revocation of the certificate of conformity for that engine family or configuration pursuant to paragraph (b), (c), or (e) of this section, the manufacturer may request that the Administrator conditionally reinstate the certificate for that engine family or configuration. The Administrator may reinstate the certificate subject to the condition that the manufacturer consents to recall all engines or vehicles of that engine family or configuration produced from the time the certificate is conditionally reinstated if the engine family or configuration fails the subsequent testing and to remedy any nonconformity at no expense to the owner.

[62 FR 31240, June 6, 1997]

§ 86.1014–84 Hearings on suspension, revocation and voiding of certificate of conformity.

(a) *Applicability*. The procedures prescribed by this section apply whenever a manufacturer requests a hearing pursuant to § 86.087–30 (e)(6)(i), § 86.087–30(e)(7), or § 86.1012–84(1).

(b) *Definitions*. The following definitions are applicable to this section:

(1) *Hearing Clerk* shall mean the Hearing Clerk of the Environmental Protection Agency.

(2) *Manufacturer* means a manufacturer contesting a suspension or revocation order directed at the manufacturer.

(3) *Party* means the Agency and the manufacturer.

(4) *Presiding Officer* means an Administrative Law Judge appointed pursuant to 5 U.S.C. 3105 (see also 5 CFR part 930 as amended).

(5) *Environmental Appeals Board* shall mean the Board within the Agency described in § 1.25 of this title. The Administrator delegates authority to the Environmental Appeals Board to issue final decisions in appeals filed under this subpart. Appeals directed to the Administrator, rather than to the Environmental Appeals Board, will not be considered. This delegation of authority to the Environmental Appeals Board does not preclude the Environmental Appeals Board from referring an appeal or a motion filed under this subpart to the Administrator for decision when the Environmental Appeals Board, in its discretion, deems it appropriate to do so. When an appeal or motion is referred to the Administrator, all parties shall be so notified and the rules in this part referring to the Environmental Appeals Board shall be interpreted as referring to the Administrator.

(c) *Request for public hearing*. (1) If the manufacturer disagrees with the Administrator's decision to suspend, revoke or void a certificate or disputes the basis for an automatic suspension pursuant to § 86.1012–84(a), the manufacturer may request a public hearing

as described in this section. The manufacturer shall file with the Administrator a request for this hearing not later than fifteen (15) days after the Administrator's notification of his decision to suspend or revoke unless otherwise specified by the Administrator. The manufacturer shall simultaneously serve two copies of this request upon the Director of the Manufacturers Operations Division and file two copies with the Hearing Clerk. Failure of the manufacturer to request a hearing within the time provided constitutes a waiver of the right to a hearing. Subsequent to the expiration of the period for requesting a hearing as of right, the Administrator may, in his discretion and for good cause shown, grant the manufacturer a hearing to contest the suspension or revocation.

(2) A manufacturer shall include in the request for a public hearing—

(i) A statement as to which engine or vehicle configuration is to be the subject of the hearing;

(ii) A concise statement of the issues to be raised by the manufacturer at the hearing: *Provided, however,* That in the case of the hearing requested under § 86.1012–84(1), the hearing is restricted to the following issues:

(A) Whether tests have been properly conducted, specifically, Whether the tests were conducted in accordance with applicable regulations under this part and whether test equipment was properly calibrated and functioning; and

(B) Whether sampling plans have been properly applied, specifically, whether sampling procedures specified in appendix X were followed and whether there exists a basis for distinguishing engines or vehicles produced at plants other than the one from which engines or vehicles were selected for testing which would invalidate the Administrator's decision under § 86.1012–84(e);

(iii) A statement specifying reasons why the manufacturer believes it will prevail on the merits of each of the issues raised; and

(iv) A summary of the evidence which supports the manufacturer's position on each of the issues raised.

(3) A copy of all requests for public hearings will be kept on file in the Office of the Hearing Clerk and will be made available to the public during Agency business hours.

(d) *Summary decision.* (1) In the case of a hearing requested under § 86.1012–84(1), when it clearly appears from the data and other information contained in the request for a hearing that there is no genuine and substantial question of fact with respect to the issues specified in § 86.1014–84(c)(2)(ii), the Administrator shall enter an order denying the request for a hearing and reaffirming the original decision to suspend or revoke a certificate of conformity, if this decision has been made pursuant to § 86.1012–84(g) at any time prior to the decision to deny the request for a hearing.

(2) In the case of a hearing requested under § 86.087–30(e)(6)(i), to challenge a proposed suspension of a certificate of conformity for the reasons specified in § 86.087–30(e)(1)(i) or (e)(1)(ii), when it clearly appears from the data and other information contained in the request for the hearing that there is no genuine and substantial question of fact with respect to the issue of whether the refusal to comply with the provisions of a test order or any other requirement of § 86.1003–84 was caused by conditions and circumstances outside the control of the manufacturer, the Administrator shall enter an order denying the request for a hearing and suspending the certificate of conformity.

(3) Any order issued under paragraph (d) (1) or (2) of this section has the force and effect of a final decision of the Administrator, as issued pursuant to paragraph (w)(4) of this section.

(4) If the Administrator determines that a genuine and substantial question of fact does exist with respect to any of the issues referred to in paragraphs (d) (1) and (2) of this section, he shall grant the request for a hearing and publish a notice of public hearing in accordance with paragraph (h) of this section.

(e) *Filing and service.* (1) An original and two copies of all documents or papers required or permitted to be filed pursuant to this section must be filed with the Hearing Clerk. Filing is considered timely if mailed, as determined by the postmark, to the Hearing Clerk

within the time allowed by this section. If filing is to be accomplished by mailing, the documents must be sent to the address set forth in the notice of public hearing as described in paragraph (h) of this section.

(2) To the maximum extent possible, testimony will be presented in written form. Copies of written testimony will be served upon all parties as soon as practicable prior to the start of the hearing. A certificate of service will be provided on or accompany each document or paper filed with the Hearing Clerk. Documents to be served upon the Director of the Manufacturers Operations Division must be sent by registered mail to:

Director, Manufacturers Operations Division, U.S. Environmental Protection Agency, EN–340, 401 M St., SW., Washington, DC 20460.

Service by registered mail is complete upon mailing.

(f) *Time*. (1) In computing any period of time prescribed or allowed by this section, except as otherwise provided, the day of the act or event from which the designated period of time begins to run is not included. Saturdays, Sundays, and Federal legal holidays are included in computing the period allowed for the filing of any document or paper, except that when the period expires on a Saturday, Sunday, or Federal legal holiday, the period is extended to include the next following business day.

(2) A prescribed period of time within which a party is required or permitted to do an act is computed from the time of service, except that when service is accomplished by mail, three days will be added to the prescribed period.

(g) *Consolidation*. The Administrator or the Presiding Officer in his discretion may consolidate two or more proceedings to be held under this section for the purpose of resolving one or more issues whenever it appears that consolidation will expedite or simplify consideration of these issues. Consolidation does not affect the right of any party to raise issues that could have been raised if consolidation had not occurred.

(h) *Notice of public hearings*. Notice of a public hearing under this section is given by publication in the FEDERAL REGISTER and by such other means as the Administrator finds appropriate to provide notice to the public. To the extent possible hearings under this section will be scheduled to commence within fourteen (14) days of receipt of the application in paragraph (c) of this section.

(i) *Amicus curiae*. Persons not parties to the proceeding wishing to file briefs may do so by leave of the Presiding Officer granted on motion. A motion for leave must identify the interest of the applicant and state the reasons why the proposed amicus brief is desirable.

(j) *Presiding Officer*. The Presiding Officer shall conduct a fair and impartial hearing in accordance with 5 U.S.C. sections 554, 556 and 557 and take all necessary action to avoid delay in the disposition of the proceedings and to maintain order. He shall have all power consistent with Agency rule and with the Administrative Procedure Act necessary to this end, including the power:

(1) To administer oaths and affirmations;

(2) To rule upon offers of proof and exclude irrelevant or repetitious material;

(3) To regulate the course of the hearings and the conduct of the parties and their counsel therein;

(4) To hold conferences for simplification of the issues or any other proper purpose;

(5) To consider and rule upon all procedural and other motions appropriate to these proceedings;

(6) To require the submission of direct testimony in written form with or without affidavit whenever, in his opinion, oral testimony is not necessary for full and true disclosure of the facts;

(7) To enforce agreements and orders requiring access as authorized by law;

(8) To require the filing of briefs on any matter on which he is required to rule;

(9) To require any party or any witness, during the course of the hearing, to state his position on any issue;

(10) To take or cause depositions to be taken whenever the ends of justice would be served thereby;

(11) To make decisions or recommend decisions to resolve the disputed issues on the record of the hearing; and

(12) To issue, upon good cause shown, protective orders as described in paragraph (n) of this section.

(k) *Conferences.* (1) The Presiding Officer may hold conferences prior to or during any hearing. The Presiding Officer shall direct the Hearing Clerk to notify all parties of the time and location of any conference. At the discretion of the Presiding Officer, persons other than parties may attend. At a conference the Presiding Officer may:

(i) Obtain stipulations and admissions, receive requests, order depositions to be taken, identify disputed issues of fact and law, and require or allow the submission of written testimony from any witness or party;

(ii) Set a hearing schedule for as many of the following as he considers necessary:

(A) Oral and written statements;

(B) Submission of written direct testimony as required or authorized by the Presiding Officer;

(C) Oral direct and cross-examination of a witness where necessary as prescribed in paragraph (p) of this section; and

(D) Oral argument, if appropriate;

(iii) Identify matters of which official notice may be taken;

(iv) Consider limitation of the number of expert and other witnesses;

(v) Consider the procedure to be followed at the hearing; and

(vi) Consider any other matter that may expedite the hearing or aid in the disposition of the issue.

(2) The Presiding Officer shall summarize in writing the results of any conference, including all stipulations, if not transcribed, and shall make the summary part of the record.

(l) *Primary discovery (exchange of witness lists and documents).* (1) At a prehearing conference or within some reasonable time set by the Presiding Officer prior to the hearing, each party shall make available to the other parties the names of the expert and other witnesses the party expects to call, together with a brief summary of their expected testimony and a list of all documents and exhibits which the party expects to introduce into evidence. Thereafter, witnesses, documents, or exhibits may be added and summaries of expected testimony amended upon motion by a party.

(2) The Presiding Officer, may, upon motion by a party or other person, and for good cause shown, by order:

(i) Restrict or defer disclosure by a party of the name of a witness or a narrative summary of the expected testimony of a witness; and

(ii) Prescribe other appropriate measures to protect a witness.

(3) Any party affected by an action in paragraph (l)(2) of this section shall have an adequate opportunity, once he learns the name of a witness and obtains the narrative summary of his expected testimony, to prepare for the presentation of his case.

(m) *Other discovery.* (1) Except as provided by paragraph (m)(1) of this section, further discovery, under this paragraph is permitted only upon determination by the Presiding Officer:

(i) That this discovery will not in any way unreasonably delay the proceeding;

(ii) That the information to be obtained is not obtainable voluntarily; and

(iii) That the information has significant probative value. The Presiding Officer shall be guided by the procedures set forth in the Federal Rules of Civil Procedure, where practicable, and the precedents thereunder, except that no discovery will be undertaken except upon order of the Presiding Officer or upon agreement of the parties.

(2) The Presiding Officer shall order depositions upon oral questions only upon a showing of good cause and upon a finding that:

(i) The information sought cannot be obtained by alternative methods; or

(ii) There is a substantial reason to believe that relevant and probative evidence may otherwise not be preserved for presentation by a witness at the hearing.

(3) Any party to the proceeding desiring an order of discovery shall make a motion or motions therefor. The motion must include:

(i) The circumstances warranting the taking of the discovery;

(ii) The nature of the information expected to be discovered; and

(iii) The proposed time and place where it will be taken. If the Presiding

Officer determines the motion should be granted, he shall issue an order for the taking of the discovery together with the conditions and terms thereof.

(4) Failure to comply with an order issued pursuant to this paragraph may lead to the inference that the information to be discovered would be adverse to the person or party from whom the information was sought.

(n) *Protective orders, in camera proceedings.* (1) Upon motion by a part or by the person from whom discovery is sought, and upon a showing by the movant that the disclosure of the information to be discovered, or a particular part thereof (other than emission data), would result in methods or processes entitled to protection as trade secrets of the person being divulged, the Presiding Officer may enter a protective order with respect to this material. Any protective order will contain terms governing the treatment of the information which are appropriate under the circumstances to prevent disclosure outside the hearing: *Provided,* That the order states that the material will be filed separately from other evidence and exhibits in the hearing. Disclosure is limited to parties to the hearing, their counsel and relevant technical consultants, and authorized representatives of the United States concerned with carrying out the Act. Except in the case of the government, disclosure may be limited to counsel for parties who shall not disclose such information to the parties themselves. Except in the case of the government, disclosure to a party or his counsel is conditioned on execution of a sworn statement that no disclosure of the information will be made to persons not entitled to receive it under the terms of the protective order. (This provision is not necessary where government employees are concerned because disclosure by them is subject to the terms of 18 U.S.C. 1905.)

(2)(i) A party or person seeking a protective order may be permitted to make all or part of the required showing in camera. A record will be made of the in camera proceedings. If the Presiding Officer enters a protective order following a showing in camera, the record of the showing will be sealed and preserved and made available to the Agency or court in the event of appeal.

(ii) Attendance at any in camera proceeding may be limited to the Presiding Officer, the Agency, and the person or party seeking the protective order.

(3) Any party, subject to the terms and conditions of any protective order issues pursuant to paragraph (n)(1) of this section, desiring for the presentation of his case to make use of any in camera documents or testimony, shall make application to the Presiding Officer by motion setting forth the justification therefor. The Presiding Officer, in granting this motion, shall enter an order protecting the rights of the affected persons and parties and preventing unnecessary disclosure of this information, including the presentation of the information and oral testimony and cross-examination concerning it in executive session, as in his discretion is necessary and practicable.

(4) In the submittal of proposed findings, briefs, or other papers, counsel for all parties shall make a good faith attempt to refrain from disclosing the specific details of in camera documents and testimony. This shall not preclude references in these proposed findings, briefs, or other papers to the documents or testimony, including generalized statements based on their contents. To the extent that counsel considers it necessary to include specific details in their presentations, these details will be incorporated in separate proposed findings, briefs, or other paper marked ''confidential'', and wil become part of the in camera record.

(o) *Motions.* (1) All motions, except those made orally during the course of the hearing, must be in writing and state with particularity the grounds therefor, set forth the relief or order sought, and be filed with the Hearing Clerk and served upon all parties.

(2) Within the time fixed by the Environmental Appeals Board or the Presiding Officer, as appropriate, any party may serve and file an answer to the motion. The movant shall, if requested by the Environmental Appeals Board or the Presiding Officer, as appropriate, serve and file reply papers within the time set by the request.

(3) The Presiding Officer shall rule upon all motions filed or made prior to the filing of his decision or accelerated decision, as appropriate. The Environmental Appeals Board shall rule upon all motions filed prior to the appointment of a Presiding Officer and all motions filed after the filing of the decision of the Presiding Officer or accelerated decision. Oral argument of motions will be permitted only if the Presiding Officer or the Environmental Appeals Board, as appropriate, considers it necessary.

(p) *Evidence.* (1) The official transcripts and exhibits, together with all papers and requests filed in the proceeding, consitute the record. Immaterial or irrelevant part of an admissible document will be segregated and excluded so far as practicable. Documents or parts thereof subject to a protective order under pargarph (n) of this section wil be segregated. Evidence may be received at the hearing even though inadmissible under the rules of evidence applicable to judicial proceedings. The weight to be given evidence will be determined by its reliability and probative value.

(2) The Presiding Officer shall allow the parties to examine and cross-examine a witness to the extent that this examination and cross-examination is necessary for a full and true disclosure of the facts.

(3) Ruling of the Presiding Officer on the admissibility of evidence, the propriety of examination and cross-examination, and other procedural matters will appear in the record.

(4) Parties shall automatically be presumed to have taken exception to an adverse ruling.

(q) *Record.* (1) Hearings will be stenographically reported and transcribed and the original transcripts will be part of the record and the sole official transcript. Copies of the record will be filed with the Hearing Clerk and made available during Agency business hours for public inspection. Any thereof, except as provided in paragraph (n) of this section, shall be entitled to the same upon payment of the cost thereof.

(2) The official transcripts and exhibits, together with all paper and requests filed in the proceeding, constitute the record.

(r) *Proposed findings, conclusions.* (1) Within four (4) days of the close of the reception of evidence, or within such longer time as the Presiding Officer may fix, any party may submit for the consideration of the Presiding Officer proposed findings of fact, conclusions of law, and proposed order, together with reasons therefor and briefs in support thereof. These proposals will be in writing, be served upon all parties, and contain adequate references to the record and authorities relied upon.

(2) The record will show the Presiding Officer's ruling on the proposed findings and conclusions except when his order disposing of the proceeding otherwise informs the parties of the action taken by him thereon.

(s) *Decision of the Presiding Officer.* (1) Unless extended by the Environmental Appeals Board, the Presiding Officer shall issue and file with the Hearing Clerk his decision within fourteen (14) days (or within seven (7) days in the case of a hearing requested under § 86.1012–84(1)) after the period for filing proposed findings as provided for in paragraph (r) of this section has expired.

(2) The Presiding Officer's decision shall become the decision of the Environmental Appeals Board:

(i) When no notice of intention to appeal as described in paragraphs (t) and (u) of this section is filed, ten (10) days after issuance thereof, unless in the interim the Environmental Appeals Board shall have acted to review or stay the effective date of the decision; or

(ii) When a notice of intention to appeal is filed but the appeal is not perfected as required by paragraphs (t) or (u) of this section, five (5) days after the period allowed for perfection of an appeal has expired unless within that five (5) day period, the Environmental Appeals Board shall have acted to review or stay the effective date of the decision.

(3) The Presiding Officer's decision must include a statement of findings and conclusions, as well as the reasons or basis therefor, upon all the material issues of fact or law presented on the record and an appropriate rule or order. The decision must be supported

by substantial evidence and based upon a consideration of the whole record.

(4) At any time prior to the issuance of his decision, the Presiding Officer may reopen the proceeding for the reception of further evidence. Except for the correction of clerical errors, the jurisdiction of the Presiding Officer is terminated upon the issuance of his decision.

(t) *Appeal from the decision of the Presiding Officer.* (1) Any party to a proceeding may appeal the Presiding Officer's decision to the Environmental Appeals Board; *Provided,* That within ten (10) days after issuance of the Presiding Officer's decision the party files a notice of intention to appeal and an appeal brief within twenty (20) days of the decision.

(2) When an appeal is taken from the decision of the Presiding Officer, any party may file a brief with respect to the appeal. The party shall file the brief within fifteen (15) days of the date of the filing of the appellant's brief.

(3) Any brief filed pursuant to this paragraph will contain, in the order indicated, the following:

(i) A subject index of the matter in the brief, with page references, and a table of cases (alphabetically arranged), textbooks, statutes, and other material cited, with page references thereto:

(ii) A specification of the issues intended to be urged; provided, however, that in the case of a hearing requested under § 86.1012–84(l), the brief will be restricted to the issues specified in paragraph (c)(2)(ii) of this section;

(iii) The argument presenting clearly the points of fact and law relied upon in support of the position taken on each issue, with specific page references to the record and the legal or other material relied upon; and

(iv) A proposed order for the Environmental Appeals Board's consideration if different from the order contained in the Presiding Officer's decision.

(4) No brief in excess of 40 pages will be filed without leave of the Environmental Appeals Board.

(5) The Environmental Appeals Board may allow oral argument.

(u) *Summary appeal.* (1) In the case of a hearing requested under § 86.1012–84(l), any appeal taken from the decision of the Presiding Officer will be conducted under this subsection.

(2) Any party to the proceeding may appeal the Presiding Officer's decision to the Environmental Appeals Board by filing a notice of appeal within ten (10) days.

(3) The notice of appeal must be in the form of a brief and conform to the requirements of paragraph (t)(3) of this section.

(4) Within ten (10) days after a notice of appeal from the decision of the Presiding Officer is filed under this paragraph, any party may file a brief with respect to that appeal.

(5) No brief in excess of fifteen (15) pages will be filed without leave of the Environmental Appeals Board.

(v) *Review of the Presiding Officer's decision in the absence of appeal.* (1) If after the expiration of the period for taking an appeal as provided for by paragraph (t) or (u) of this section, no notice of intention to appeal the decision of the Presiding Officer has been filed, or if filed, not perfected, the Hearing Clerk shall so notify the Environmental Appeals Board.

(2) The Environmental Appeals Board, upon receipt of notice from the Hearing Clerk that no notice of intention to appeal the decision of the Presiding Officer has been filed, or if filed, not perfected pursuant to paragraph (t) or (u) of this section, may, on its own motion, within the time limits specified in paragraph (s)(2) of this section, review the decision of the Presiding Officer. Notice of the intention of the Environmental Appeals Board to review the decision of the Presiding Officer shall be given to all parties and shall set forth the scope of such review and the issues to be considered and shall make provision for filing of briefs.

(w) *Decision of appeal or review.* (1) Upon appeal from or review of the Presiding Officer's decision, the Environmental Appeals Board shall consider such parts of the record as are cited or as may be necessary to resolve the issues presented and in addition shall, to the extent necessary or desirable, exercise all the powers which it could have exercised if it had presided at the hearing.

(2) In rendering its decision, the Environmental Appeals Board shall adopt,

modify or set aside the findings, conclusions, and order contained in the decision of the Presiding Officer and shall set forth in its decision a statement of the reasons or basis for its action.

(3) In those cases where the Environmental Appeals Board determines that it should have further information or additional views of the parties as to the form and content of the rule or order to be issued, the Environmental Appeals Board, in its discretion, may withhold final action pending the receipt of such additional information or views, or may remand the case to the Presiding Officer.

(4) Any decision rendered under this paragraph which completes disposition of a case constitutes a final decision of the Environmental Appeals Board.

(x) *Reconsideration*. (1) Within twenty (20) days after issuance of the Environmental Appeals Board's decision, any party may file with the Environmental Appeals Board a petition for reconsideration of such decision, setting forth the relief desired and the grounds in support thereof. Any petition filed under this subsection must be confined to new questions raised by the decision or final order and upon which the petitioner had no opportunity to argue before the Presiding Officer or the Environmental Appeals Board; *Provided, however*, That in the case of a hearing requested under § 86.1012–84(1) such new questions shall be limited to the issues specified in paragraph (c)(2)(ii) of this section.

(2) Any party desiring to oppose this petition shall file an answer thereto within ten (10) days after the filing of the petition. The filing of a petition for reconsideration shall not operate to stay the effective date of the decision or order or to toll the running of any statutory time period affecting such decision or order unless specifically so ordered by the Environmental Appeals Board.

(y) *Accelerated decision, dismissal*. (1) The Presiding Officer, upon motion of any party or sua sponte, may at any time render an accelerated decision in favor of the Agency or the manufacturer as to all or any part of the proceeding, without further hearing or upon limited additional evidence such as affidavits which he may require, or dismiss any party with prejudice, for any of the following reasons:

(i) Failure to state a claim upon which relief can be granted, or direct or collateral estoppel;

(ii) The lack of any genuine issue of material fact, causing a party to be entitled to judgment as a matter of law; or

(iii) Such other reasons as are just, including specifically failure to obey a procedural order of the Presiding Officer.

(2) If, under this subsection, an accelerated decision is issued as to all the issues and claims joined in the proceeding, the decision will be treated for the purposes of these procedures as the decision of the Presiding Officer as provided in paragraph (s) of this section.

(3) If, under this subsection, judgment is rendered on less than all issues or claims in the proceeding, the Presiding Officer shall determine what material facts exist without substantial controversy and what material facts are actually and in good faith controverted. He shall thereupon issue an order specifying the facts which appear without substantial controversy, and the issues and claims upon which the hearing will proceed.

(z) *Conclusion of hearing*. (1) If, after the expiration of the period for taking an appeal as provided for by paragraphs (t) and (u) of this section, no appeal has been taken from the Presiding Officer's decision, and after the expiration of the period for review by the Environmental Appeals Board on its own motion as provided for by paragraph (v) of this section, the Environmental Appeals Board does not move to review such decision, the hearing is considered ended at the expiration of all periods allowed for the appeal and review.

(2) If an appeal of the Presiding Officer's decision is taken pursuant to paragraphs (t) and (u) of this section, or if, in the absence of this appeal, the Environmental Appeals Board moves to review the decision of the Presiding Officer pursuant to paragraph (v) of this section, the hearing is considered ended upon rendering of a final decision by the Environmental Appeals Board.

(aa) *Judicial review*. (1) The Administrator shall designate the General

Counsel, Environmental Protection Agency as the officer upon whom copy of any petition for judicial review must be served. This officer shall be responsible for filing in the court the record of which the order of the Environmental Appeals Board is based.

(2) Before forwarding the record to the court, the Agency shall advise the petitioner of costs of preparing it and as soon as payment to cover fees is made, shall forward the record to the court.

[45 FR 63772, Sept. 25, 1980, as amended at 50 FR 35387, Aug. 30, 1985; 57 FR 5332, Feb. 13, 1992]

§ 86.1014–97 Hearings on suspension, revocation and voiding of certificates of conformity.

Section 86.1014–97 includes text that specifies requirements that differ from those specified in § 86.1014–84. Where a paragraph in § 86.1014–84 is identical and applicable to § 86.1014–97, this may be indicated by specifying the corresponding paragraph and the statement ''[Reserved]. For guidance see § 86.1014–84''.

(a) through (c)(2)(ii) introductory text [Reserved]. For guidance see § 86.1014–84.

(c)(2)(ii)(A) Whether tests have been properly conducted, specifically, whether the tests were conducted in accordance with applicable regulations and whether test equipment was properly calibrated and functioning; and

(c)(2)(ii) (B) through (aa) [Reserved]. For guidance see § 86.1014–84.

[62 FR 31241, June 6, 1997]

§ 86.1015 Treatment of confidential information.

(a) Any manufacturer may assert that some or all of the information submitted pursuant to this subpart is entitled to confidential treatment as provided by 40 CFR part 2, subpart B.

(b) Any claim of confidentiality must accompany the information at the time it is submitted to EPA.

(c) To assert that information submitted pursuant to this subpart is confidential, a manufacturer must indicate clearly the items of information claimed confidential by marking, circling, bracketing, stamping, or otherwise specifying the confidential information. Furthermore, EPA requests, but does not require, that the submitter also provide a second copy of its submittal from which all confidential information has been deleted. If a need arises to publicly release nonconfidential information, EPA will assume that the submitter has accurately deleted the confidential information from this second copy.

(d) If a claim is made that some or all of the information submitted pursuant to this subpart is entitled to confidential treatment, the information covered by that confidentiality claim will be disclosed by the Environmental Appeals Board only to the extent and by means of the procedures set forth in part 2, subpart B, of this chapter.

(e) Information provided without a claim of confidentiality at the time of submission may be made available to the public by EPA without further notice to the submitter, in accordance with 40 CFR 2.204(c)(2)(i)(A).

[50 FR 34798, Aug. 27, 1985, as amended at 57 FR 5333, Feb. 13, 1992; 57 FR 30657, July 10, 1992]

Subpart L—Nonconformance Penalties for Gasoline-Fueled and Diesel Heavy-Duty Engines and Heavy-Duty Vehicles, Including Light-Duty Trucks

SOURCE: 50 FR 35388, Aug. 30, 1985, unless otherwise noted.

§ 86.1101–87 Applicability.

(a) The provisions of this subpart are applicable for 1987 and later model year gasoline-fueled and diesel heavy-duty engines and heavy-duty vehicles. These vehicles include light-duty trucks rated in excess of 6,000 pounds gross vehicle weight.

(b) References in this subpart to engine families and emission control systems shall be deemed to apply to durability groups and test groups as applicable for manufacturers certifying new light-duty trucks and Otto-cycle complete heavy-duty vehicles under the provisions of subpart S of this part.

[65 FR 59957, Oct. 6, 2000]

§ 86.1102–87 Definitions.

(a) The definitions in this section apply to this subpart.

(b) As used in this subpart, all terms not defined herein have the meaning given them in the Act.

Compliance level means the deteriorated pollutant emissions level at the 60th percentile point for a population of heavy-duty engines or heavy-duty vehicles subject to Production Compliance Audit testing pursuant to the requirements of this subpart. A compliance level for a population can only be determined for a pollutant for which an upper limit has been established in this subpart.

Configuration means a subdivision, if any, of a heavy-duty engine family for which a separate projected sales figure is listed in the manufacturer's Application for Certification and which can be described on the basis of emission control system, governed speed, injector size, engine calibration, or other parameters which may be designated by the Administrator, or a subclassification of light-duty truck engine family emission control system combination on the basis of engine code, inertia weight class, transmission type and gear ratios, rear axle ratio, or other parameters which may be designated by the Administrator.

NCP means a nonconformance penalty as described in section 206(g) of the Clean Air Act and in this subpart.

PCA means Production Compliance Audit as described in § 86.1106–87 of this subpart.

Subclass means a classification of heavy-duty engines of heavy-duty vehicles based on such factors as gross vehicle weight rating, fuel usage (gasoline-, diesel-, and methanol-fueled), vehicle usage, engine horsepower or additional criteria that the Administrator shall apply. Subclasses include, but are not limited to:

(i) Light-duty gasoline-fueled Otto cycle trucks (6,001–8,500 lb. GVW)

(ii) Light-duty methanol-fueled Otto cycle trucks (6,001–8,500 lb. GVW)

(iii) Light-duty petroleum-fueled diesel trucks (6,001–8,500 lb. GVW)

(iv) Light-duty methanol-fueled diesel trucks (6,001–8,500 lb. GVW)

(v) Light heavy-duty gasoline-fueled Otto cycle engines (for use in vehicles of 8,501–14,000 lb. GVW)

(vi) Light heavy-duty methanol-fueled Otto cycle engines (for use in vehicles of 8,501–14,000 lb. GVW)

(vii) Heavy heavy-duty gasoline-fueled Otto cycle engines (for use in vehicles of 14,001 lb and above GVW)

(viii) Heavy heavy-duty methanol-fueled Otto cycle engines (for use in vehicles of 14,001 lb. and above GVW)

(ix) Light heavy-duty petroleum-fueled diesel engines (see § 86.085–2(a)(1))

(x) Light heavy-duty methanol-fueled diesel engines (see § 86.085–2(a)(1))

(xi) Medium heavy-duty petroleum-fueled diesel engines (see § 86.085–2(a)(2))

(xii) Medium heavy-duty methanol-fueled diesel engines (see § 86.085–2(a)(2))

(xiii) Heavy heavy-duty petroleum-fueled diesel engines (see § 86.085–2(a)(3))

(xiv) Heavy heavy-duty methanol-fueled diesel engines (see § 86.085–2(a)(3))

(xv) Petroleum-fueled Urban Bus engines (see § 86.091–2)

(xvi) Methanol-fueled Urban Bus engines (see § 86.091–2).

For NCP purposes, all optionally certified engines and/or vehicles (engines certified in accordance with § 86.087–10(a)(3) and vehicles certified in accordance with § 86.085–1(b)) shall be considered part of, and included in the FRAC calculation of, the subclass for which they are optionally certified.

Test Sample means a group of heavy-duty engines or heavy-duty vehicles of the same configuration which have been selected for emission testing.

Upper limit means the emission level for a specific pollutant above which a certificate of conformity may not be issued or may be suspended or revoked.

[50 FR 35388, Aug. 30, 1985, as amended at 55 FR 46628, Nov. 5, 1990]

§ 86.1103–87 Criteria for availability of nonconformance penalties.

(a) EPA shall establish for each subclass of heavy-duty engines and heavy-duty vehicles (other than motorcycles), an NCP for a motor vehicle pollutant, when any new or revised emission

standard is more stringent than the previous standard for the pollutant, or when an existing standard for that pollutant becomes more difficult to achieve because of a new or revised standard, provided that EPA finds:

(1) That for such subclass of engines or vehicles, substantial work will be required to meet the standard for which the NCP is offered, and

(2) That there is likely to be a technological laggard.

(b) Substantial work, as used in paragraph (a)(1) of this section, means the application of technology not previously used in an engine or vehicle class or subclass, or the significant modification of existing technology or design parameters, needed to bring the vehicle or engine into compliance with either the more stringent new or revised standard or an existing standard which becomes more difficult to achieve because of a new or revised standard.

§ 86.1104–91 Determination of upper limits.

(a) The upper limit applicable to a pollutant emission standard for a subclass of heavy-duty engines or heavy-duty vehicles for which an NCP is established in accordance with § 86.1103–87, shall be the previous pollutant emission standard for that subclass.

(b) If no previous standard existed for the pollutant under paragraph (a) of this section, the upper limit will be developed by EPA during rulemaking.

(c) If a manufacturer participates in any of the emissions averaging, trading, or banking programs, and carries over certification of an engine family from the prior model year, the upper limit for that engine family shall be the family emission limit of the prior model year, unless the family emission limit is less than the upper limit determined in paragraph (a) of this section.

[55 FR 30629, July 26, 1990]

§ 86.1105–87 Emission standards for which nonconformance penalties are available.

(a)–(b) [Reserved]

(c) Effective in the 1991 model year, NCPs will be available for the following additional emission standards:

(1) [Reserved]

(2) Petroleum-fueled diesel heavy-duty engine oxides of nitrogen standard of 5.0 grams per brake horsepower-hour.

(i) For petroleum-fueled light heavy-duty diesel engines:

(A) The following values shall be used to calculate an NCP in accordance with § 86.1113–87(a):

(*1*) COC_{50}: $830.

(*2*) COC_{90}: $946.

(*3*) MC_{50}: $1,167 per gram per brake horsepower-hour.

(*4*) F: 1.2.

(B) The following factor shall be used to calculate the engineering and development component of the NCP in accordance with § 86.1113–87(h): 0.12.

(ii) For petroleum-fueled medium heavy-duty diesel engines:

(A) The following values shall be used to calculate an NCP in accordance with § 86.1113–87(a):

(*1*) COC_{50}: $905.

(*2*) COC_{90}: $1,453.

(*3*) MC_{50}: $1,417 per gram per brake horsepower-hour.

(*4*) F: 1.2.

(B) The following factor shall be used to calculate the engineering and development component of the NCP in accordance with § 86.1113–87(h): 0.11.

(iii) For petroleum-fueled heavy-duty diesel engines:

(A) The following values shall be used to calculate an NCP in accordance with § 86.1113–87(a):

(*1*) COC_{50}: $930.

(*2*) COC_{90}: $1,590.

(*3*) MC_{50}: $2,250 per gram per brake horsepower-hour.

(*4*) F: 1.2.

(B) The following factor shall be used to calculate the engineering and development component of the NCP in accordance with § 86.1113–87(h): 0.11.

(3) Petroleum-fueled diesel light-duty trucks (between 6,001 and 14,000 lbs GVW) particulate matter emission standard of 0.13 grams per vehicle mile.

(i) The following values shall be used to calculate an NCP in accordance with § 86.1113–87(a):

(A) COC_{50}: $711.

(B) COC_{90}: $1,396.

(C) MC_{50}: $2,960 per gram per brake horsepower-hour.

(D) F: 1.2.

(ii) The following factor shall be used to calculate the engineering and development component of the NCP in accordance with § 86.1113–87(h): 0.01.

(d) Effective in the 1993 model year, NCPs will be available for the following additional emission standard:

(1) Petroleum-fueled diesel bus engine (as defined in § 86.093–2) particulate emission standard of 0.10 grams per brake horsepower-hour.

(i) The following values shall be used to calculate an NCP for the standard set forth in § 86.093–11(a)(1)(iv)(A) in accordance with § 86.1113–87(a):

(A) COC_{50}: $4,020.

(B) COC_{90}: $4,535.

(C) MC_{50}: $22,971 per gram per brake horsepower-hour.

(D) F: 1.2.

(E) UL: 0.25 grams per brake horsepower-hour.

(ii) The following factor shall be used to calculate the engineering and development component of the NCP for the standard set forth in § 86.093–11(a)(1)(iv)(A) in accordance with § 86.1113–87(h): 0.02.

(2) [Reserved]

(e) The values of COC_{50}, COC_{90}, and MC_{50} in paragraphs (a) and (b) of this section are expressed in December 1984 dollars. The values of COC_{50}, COC_{90}, and MC_{50} in paragraphs (c) and (d) of this section are expressed in December 1989 dollars. The values of COC_{50}, COC_{90}, and MC_{50} in paragraph (f) of this section are expressed in December 1991 dollars. The values of COC_{50} COC_{90}, and MC_{50} in paragraphs (g) and (h) of this section are expressed in December 1994 dollars. The values of COC_{50}, COC_{90}, and MC_{50} in paragraph (i) of this section are expressed in December 2001 dollars. These values shall be adjusted for inflation to dollars as of January of the calendar year preceding the model year in which the NCP is first available by using the change in the overall Consumer Price Index, and rounded to the nearest whole dollar in accordance with ASTM E29–67 (reapproved 1980), Standard Recommended Practice for Indicating Which Places of Figures are to be Considered Significant in Specified Limiting Values. The method was approved by the Director of the Federal Register in accordance with 5 U.S.C. 552(a) and 1 CFR part 51. This document is available from ASTM International, 100 Barr Harbor Drive, P.O. Box C700, West Conshohocken, PA 19428–2959, and is also available for inspection as part of Docket A–91–06, located at the Central Docket Section, EPA, 401 M Street, SW., Washington, DC or at the National Archives and Records Administration (NARA). For information on the availability of this material at NARA, call 202–741–6030, or go to: *http://www.archives.gov/federal_register/code_of_federal_regulations/ibr_locations.html*. This incorporation by reference was approved by the Director of the Federal Register on January 13, 1992. These materials are incorporated as they exist on the date of the approval and a notice of any change in these materials will be published in the FEDERAL REGISTER.

(f) Effective in the 1994 model year, NCPs will be available for the following emission standards:

(1) Petroleum-fueled urban bus engine (as defined in § 86.091–2) particulate emission standard of 0.07 grams per brake horsepower-hour.

(i) The following values shall be used to calculate an NCP for the standard set forth in § 86.094–11(a)(1)(iv)(A) in accordance with § 86.1113–87(a):

(A) COC_{50}: $3292.

(B) COC_{90}: $10,014.

(C) MC_{50}: $109,733.

(D) F: 1.2.

(ii) The following factor shall be used to calculate the engineering and development component of the NCP for the standard set forth in § 86.094–11(a)(1)(iv)(A) in accordance with § 86.1113–87(h): 0.38.

(2) Petroleum-fueled diesel heavy-duty engine particulate matter emission standard of 0.10 grams per brake horsepower-hour.

(i) For petroleum-fueled light heavy-duty diesel engines:

(A) The following values shall be used to calculate an NCP in accordance with § 86.1113–87(a):

(*1*) COC_{50}: $772.

(*2*) COC_{90}: $1,325.

(*3*) MC_{50}: $8,178 per gram per brake horsepower-hour.

(*4*) F: 1.2.

(B) The following factor shall be used to calculate the engineering and development component of the NCP in accordance with § 86.1113–87(h): 0.081.

(ii) For petroleum-fueled medium heavy-duty diesel engines:

(A) The following values shall be used to calculate an NCP in accordance with § 86.1113–87(a):

(*1*) COC_{50}: $1,276.

(*2*) COC_{90}: $3,298.

(*3*) MC_{50}: $15,370 per gram per brake horsepower-hour.

(*4*) F: 1.2.

(B) The following factor shall be used to calculate the engineering and development component of the NCP in accordance with § 86.1113–87(h): 0.098.

(iii) For petroleum-fueled heavy heavy-duty diesel engines:

(A) The following values shall be used to calculate an NCP in accordance with § 86.1113–87(a):

(*1*) COC_{50}: $2,105.

(*2*) COC_{90}: $6,978.

(*3*) MC_{50}: $30,070 per gram per brake horsepower-hour.

(*4*) F: 1.2.

(B) The following factor shall be used to calculate the engineering and development component of the NCP in accordance with § 86.1113-87(h): 0.083.

(g) Effective in the 1996 model year, NCPs will be available for the following emission standard:

(1) Light-duty truck 3 diesel-fueled vehicle at full useful life (as defined in § 86.094–2) particulate matter emission standard of 0.10 g/mi.

(i) The following values shall be used to calculate an NCP for the standard set forth in § 86.094–9(a)(1)(ii) in accordance with § 86.1113–87(a):

(A) COC_{50}: $441.

(B) COC_{90}: $1,471.

(C) MC_{50}: $14,700 per gram per mile.

(D) F: 1.2.

(ii) The following factor shall be used to calculate the engineering and development component of the NCP for the standard set forth in § 86.094–9(a)(1)(ii) in accordance with § 86.1113–87(h): 0.093.

(2) Light-duty truck 3 diesel-fueled vehicle at full useful life (as defined in § 86.094–2) oxides of nitrogen emission standard of 0.98 g/mi.

(i) The following values shall be used to calculate an NCP for the standard set forth in § 86.094–9(a)(1)(ii) in accordance with § 86.1113–87(a):

(A) COC_{50}: $654.

(B) COC_{90}: $779.

(C) MC_{50}: $908 per gram per mile.

(D) F: 1.2.

(ii) The following factor shall be used to calculate the engineering and development component of the NCP for the standard set forth in § 86.094–9(a)(1)(ii) in accordance with § 86.1113–87(h): 0.082.

(3) 1996 Urban Bus (as defined in § 86.094–2) particulate matter emission standard of 0.05 g/BHp-hr.

(i) The following values shall be used to calculate an NCP for the standard set forth in § 86.094–9(a)(1)(ii) in accordance with § 86.1113–87(a):

(A) COC_{50}: $576.

(B) COC_{90}: $6,569.

(C) MC_{50}: $28,800 per gram per brake horsepower-hour.

(D) F: 1.2.

(ii) The following factor shall be used to calculate the engineering and development component of the NCP for the standard set forth in § 86.094–9(a)(1)(ii) in accordance with § 86.1113–87(h): 0.500.

(h) Effective in the 1998 model year, NCPs will be available for the following emission standard:

(1) Petroleum-fueled diesel heavy-duty engine oxides of nitrogen standard of 4.0 grams per brake horsepower-hour.

(i) For petroleum-fueled light heavy-duty diesel engines:

(A) The following values shall be used to calculate an NCP in accordance with § 86.1113–87(a):

(*1*) COC_{50}: $833.

(*2*) COC_{90}: $1,513.

(*3*) MC_{50}: $833 per gram per brake horsepower-hour.

(*4*) F: 1.2.

(B) The following factor shall be used to calculate the engineering and development component of the NCP for the standard set forth in § 86.094–9(a)(1)(ii) in accordance with § 86.1113–87(h): 0.039.

(ii) For petroleum-fueled medium heavy-duty diesel engines:

(A) The following values shall be used to calculate an NCP in accordance with § 86.1113–87(a):

(*1*) COC_{50}: $444.

(*2*) COC_{90}: $1,368.

(*3*) MC_{50}: $444 per gram per brake horsepower-hour.

(*4*) F: 1.2.

(B) The following factor shall be used to calculate the engineering and development component of the NCP for the standard set forth in § 86.094–9(a)(1)(ii) in accordance with § 86.1113–87(h): 0.043.

(iii) For petroleum-fueled heavy heavy-duty diesel engines:

(A) The following values shall be used to calculate an NCP in accordance with § 86.1113–87(a):

(*1*) COC_{50}: $1,086.

(*2*) COC_{90}: $2,540.

(*3*) MC_{50}: $1,086 per gram per brake horsepower-hour

(*4*) F: 1.2.

(B) The following factor shall be used to calculate the engineering and development component of the NCP for the standard set forth in § 86.094–9(a)(1)(ii) in accordance with § 86.1113–87(h): 0.039.

(2) [Reserved]

(i) Effective in the 2004 model year, NCPs will be available for the following emission standard:

(1) Diesel heavy-duty engine non-methane hydrocarbon plus oxides of nitrogen standard of 2.4 grams per brake horsepower-hour (or alternatively, 2.5 grams per brake horsepower-hour with a limit on non-methane hydrocarbon emissions of 0.5 grams per brake horsepower-hour), in § 86.004–11(a)(1)(i).

(i) For light heavy-duty diesel engines:

(A) The following values shall be used to calculate an NCP in accordance with § 86.1113–87(a):

(*1*) COC_{50}: $1,240.

(*2*) COC_{90}: $2,710.

(*3*) MC_{50}: $2,000 per gram per brake horsepower-hour.

(*4*) F: 1.3.

(*5*) UL: 4.5 grams per brake horsepower-hour; notwithstanding § 86.1104–91.

(B) The following factor shall be used to calculate the engineering and development component of the NCP for the standard set forth in § 86.004–11(a)(1)(i) in accordance with § 86.1113–87(h): 0.403.

(ii) For medium heavy-duty diesel engines:

(A) The following values shall be used to calculate an NCP in accordance with § 86.1113–87(a):

(*1*) COC_{50}: $2,740.

(*2*) COC_{90}: $4,930.

(*3*) MC_{50}: $1,400 per gram per brake horsepower-hour.

(*4*) F: 1.3.

(*5*) UL: 4.5 grams per brake horsepower-hour; notwithstanding § 86.1104–91.

(B) The following factor shall be used to calculate the engineering and development component of the NCP for the standard set forth in § 86.004–11(a)(1)(i) in accordance with § 86.1113–87(h): 0.197.

(iii) For heavy heavy-duty diesel engines:

(A) The following values shall be used to calculate an NCP in accordance with § 86.1113–87(a):

(*1*) COC_{50}: $6,810.

(*2*) COC_{90}: $12,210.

(*3*) MC_{50}: $5,600 per gram per brake horsepower-hour.

(*4*) F: 1.3.

(*5*) UL: 6.0 grams per brake horsepower-hour; notwithstanding § 86.1104–91.

(B) The following factor shall be used to calculate the engineering and development component of the NCP for the standard set forth in § 86.004–11(a)(1)(i) in accordance with § 86.1113–87(h): 0.090.

(iv) For diesel urban bus engines:

(A) The following values shall be used to calculate an NCP in accordance with § 86.1113–87(a):

(*1*) COC_{50}: $3,930.

(*2*) COC_{90}: $6,660.

(*3*) MC_{50}: $3,800 per gram per brake horsepower-hour.

(*4*) F: 1.3.

(*5*) UL: 4.5 grams per brake horsepower-hour; notwithstanding § 86.1104–91.

(B) The following factor shall be used to calculate the engineering and development component of the NCP for the standard set forth in § 86.004–11(a)(1)(i) in accordance with § 86.1113–87(h): 0.155.

(2) [Reserved]

[50 FR 53466, Dec. 31, 1985, as amended at 52 FR 47870, Dec. 16, 1987; 53 FR 43878, Oct. 31, 1988; 56 FR 64712, Dec. 12, 1991; 58 FR 15802, Mar. 24, 1993; 58 FR 68540, Dec. 28, 1993; 60 FR 33925, June 29, 1995; 61 FR 6949, 6953, Feb. 23, 1996; 67 FR 51477, Aug. 8, 2002; 69 FR 18803, Apr. 9, 2004]

§ 86.1106–87 Production compliance auditing.

For a model year in which upper limits for heavy-duty engine or heavy-duty vehicle emission standards for one

or more exhaust pollutants are specified in § 86.1105–87, a manufacturer may elect to conduct a Production Compliance Audit (PCA) for each engine or vehicle configuration satisfying the following conditions:

(a) Certification test results, pursuant to § 86.082–23, exceed the emission standard for a particular pollutant but do not exceed the upper limit established for that pollutant. In that event, the manufacturer will be offered a qualified certificate of conformity allowing for the introduction into commerce of the specified engine family, *Provided*, That:

(1) The manufacturer must agree to conduct a PCA of those engines or vehicles;

(2) PCA testing must be conducted on the same configurations that exceeded the standard in certification. In lieu of that requirement, the Administrator may approve testing of a greater or lesser number of configurations provided the manufacturer agrees to pay the NCP determined from the CL of each tested configuration for that configuration and for other non-tested configurations that have similar emission characteristics. If an acceptable showing of similar emission characteristics is not made, the highest CL of the configurations tested will apply to all non-tested configurations exceeding the standard.

(3) The selection of engines or vehicles for PCA testing must be initiated no later than five (5) days after the start of assembly-line production of the specified engine or vehicle configuration, unless that period is extended by the Administrator;

(4) The manufacturer must agree:

(i) To pay the NCP amount calculated as a result of PCA testing on each engine or vehicle, unless the manufacturer successfully challenges the Administrator's determination of the compliance level or penalty calculation or both under § 86.1115–87(c);

(ii) To recall any engines or vehicles introduced into commerce, without invoking the procedural requirements of section 207(c) of the Clean Air Act, if the compliance level for the engine or vehicle configuration of (a)(2) exceeds the upper limit as determined by the PCA;

(5) If the compliance level determined in the PCA is below the emission standard, no NCP will be offered, and all appropriate qualifications will be removed from the qualified certificate of conformity.

(b) An engine or vehicle configuration fails a Selective Enforcement Audit (SEA) under subpart K of 40 CFR part 86 with respect to the standard for a particular pollutant but does not fail with respect to the upper limit established for that pollutant, and no NCP has been previously assessed for that configuration, *Provided*, That:

(1) The manufacturer must submit a written report to the Administrator within five (5) days after failure to pass the audit containing the following:

(i) A statement that the manufacturer does not intend, at that time, to make any engine and/or emission control system design changes that may remedy the nonconformity; and

(ii) A request from the manufacturer to conduct the PCA, including the date the testing will begin;

(2) Failure to submit the report within five (5) days after the SEA failure will result in the forfeiture of the NCP option, unless a satisfactory justification for the delay is provided to the Administrator;

(3) The selection of any required engines or vehicles for PCA testing must be initiated no later than ten (10) days after the SEA failure unless extended by the Administrator; otherwise, the manufacturer may forfeit the option to elect an NCP;

(4) PCA testing must be conducted on the same configuration that failed the SEA;

(5) Test results from the SEA, together with any additional test results required during the PCA, will be used in establishing a compliance level for the configuration pursuant to § 86.1112–87(a); and

(6) The manufacturer, upon approval by the Administrator to conduct a PCA on a failed SEA engine or vehicle configuration, must agree:

(i) To pay the NCP amount calculated as a result of PCA testing on each engine or vehicle introduced into commerce after the tenth day of the SEA failure, unless the manufacturer

successfully challenges the Administrator's determination of the compliance level or penalty calculation or both under § 86.1115–87(c);

(ii) To recall any engines or vehicles introduced into commerce after the tenth day of the SEA failure, without invoking the procedural requirements of section 207(c) of the Clean Air Act, if the compliance level of the engine or vehicle configuration exceeds the upper limit as determined by the PCA.

(c) An engine or vehicle configuration, for which an NCP has been previously assessed for a particular pollutant, either passes an SEA with respect to the particular pollutant standard, fails an SEA with respect to the particular pollutant standard but not the previous compliance level, or fails an SEA with respect to the previous compliance level but not the associated upper limit, *Provided*, That:

(1) The manufacturer must submit a written statement to the Administrator within five (5) days of the conclusion of the SEA requesting a PCA, including the date the PCA testing will begin; otherwise, the manufacturer forfeits the option to establish a new compliance level;

(2) The selection of any required engines or vehicles for PCA testing must be initiated no later than ten (10) days after the conclusion of the SEA unless the period is extended by the Administrator; otherwise, the manufacturer forfeits the option to establish a new compliance level;

(3) PCA testing must be conducted on the same configuration tested during the SEA, and all conditions in the SEA test order must apply to the PCA;

(4) Test results for the SEA, together with any additional test results required during the PCA, will be used in establishing a new compliance level for the configuration pursuant to § 86.1112–87(a);

(5) The manufacturer must agree:

(i) To pay the NCP amount calculated as a result of PCA testing on each engine or vehicle introduced into commerce after the tenth day of the conclusion of the SEA, unless the manufacturer successfully challenges the Administrator's determination of the compliance level or penalty calculation or both under § 86.1115–87(c);

(ii) To recall any engines or vehicles introduced into commerce after the tenth day after the conclusion of the SEA, without invoking the procedural requirements of section 207(c) of the Clean Air Act, if the engine or vehicle configuration exceeds the upper limit as determined by the PCA;

(6) A previously assessed NCP will be terminated and no NCP will be established as a result of the new PCA if the compliance level is determined to be below the applicable emission standards.

(d) The implementation of a production running change that causes the emission level for a particular pollutant to be either above the emission standard but below the associated upper limit for a vehicle or engine configuration for which an NCP has not been previously assessed, or below the associated upper limit for a vehicle or engine configuration for which an NCP has been previously assessed, regardless of the previous compliance level. In that event, the manufacturer will be offered a qualified certificate of conformity allowing for the introduction into commerce of the engine or vehicle configuration resulting from the running change, *Provided*, That:

(1) The manufacturer must submit a written report to the Administrator outlining the reason for the running change and the date the manufacturer will begin PCA testing;

(2) The manufacturer must agree:

(i) To pay the NCP amount calculated as a result of PCA testing on each engine or vehicle, unless the manufacturer successfully challenges the Administrator's determination of compliance level or penalty calculation or both under § 86.1115–87(c);

(ii) To recall any engines or vehicles introduced into commerce, without invoking the procedural requirements of section 207(c) of the Clean Air Act, if the engine or vehicle configuration exceeds the upper limit as determined by the PCA;

(3) The selection of engines or vehicles for PCA testing must be initiated no later than five (5) days after the start of assembly line production of the engine or vehicle configuration resulting from the running change unless

that period is extended by the Administrator; and

(4) If the compliance level is determined to be below the applicable emission standard, a previously assessed NCP will be terminated, an NCP will not be established as a result of the PCA testing, and all qualifications will be removed from the qualified certificate of conformity.

(e) The following requirements are applicable to each PCA under this subpart.

(1) The manufacturer shall make the following documents available to EPA Enforcement Officers upon request;

(i) A properly filed and current application for certification, following the format prescribed by the EPA for the appropriate model year; and

(ii) A copy of the shop manual and dealer service bulletins for the configurations being tested.

(2) Only one mechanic at a time per engine or vehicle shall make authorized checks, adjustments, or repairs, unless a particular check, adjustment, or repair requires a second mechanic as indicated in the shop manual or dealer service bulletins.

(3) A mechanic shall not perform any check, adjustment, or repair without an Enforcement Officer present unless otherwise authorized.

(4) The manufacturer shall utilize only those tools and test equipment utilized by its dealers or those dealers using its engines when performing authorized checks, adjustments, or repairs.

[50 FR 35388, Aug. 30, 1985, as amended at 58 FR 68540, Dec. 28, 1993]

§ 86.1107–87 Testing by the Administrator.

(a) The Administrator may require that engines or vehicles of a specified configuration be selected in a manner consistent with the requirements of § 86.1110–87 and submitted to him at such place as he may designate for the purpose of conducting emission tests in accordance with § 86.1111–87 to determine whether engines or vehicles manufactured by the manufacturer conform with the regulations of this subpart.

(b)(1) Whenever the Administrator conducts a test on a test engine or vehicle or the Administrator and manufacturer each conduct a test on the same test engine or vehicle, the results of the Administrator's test will comprise the official data for that engine or vehicle.

(2) Whenever the manufacturer conducts all tests on a test engine or vehicle, the manufacturer's test data will be accepted as the official data, provided that if the Administrator makes a determination based on testing under paragraph (a) of this section that there is a substantial lack of agreement between the manufacturer's test results and the Administrator's test results, no manufacturer's test data from the manufacturer's test facility will be accepted for purposes of this subpart.

(c) If the Administrator determines that testing conducted under paragraph (a) of this section demonstrates a lack of agreement under paragraph (b)(2) of this section, the Administrator shall:

(1) Notify the manufacturer in writing of his determination that the manufacturer's test facility is inappropriate for conducting the tests required by this subpart and the reasons therefore; and

(2) Reinstate any manufacturer's data only upon a showing by the manufacturer that the data acquired under paragraph (a) of this section was erroneous and the manufacturer's data was correct.

(d) The manufacturer may request in writing that the Administrator reconsider his determination in paragraph (b)(2) of this section based on data or information which indicates that changes have been made to the test facility and that these changes have resolved the reasons for disqualification.

§ 86.1108–87 Maintenance of records.

(a) The manufacturer of any new gasoline-fueled or diesel heavy-duty engine or heavy-duty vehicle subject to any of the provisions of this subpart shall establish, maintain, and retain the following adequately organized and indexed records:

(1) *General records.* A description of all equipment used to test engines or vehicles in accordance with § 86.1111–87, pursuant to PCA testing under this subpart, specifically;

(i) If testing heavy-duty gasoline engines, the equipment requirements specified in 40 CFR part 1065, subparts B and C;

(ii) If testing heavy-duty diesel engines, the equipment requirements specified in 40 CFR part 1065, subparts B and C;

(iii) If testing light-duty gasoline-fueled trucks, the equipment requirements specified in §§ 86.106 (excluding all references to particulate emission testing) and 86.1506–84 of this part; and

(iv) If testing light-duty diesel trucks, the equipment requirements specified in § 86.106 (excluding all references to evaporative emission testing) of this part.

(2) *Individual records.* These records pertain to each Production Compliance Audit conducted pursuant to this subpart.

(i) The date, time, and location of each test;

(ii) The number of hours of service accumulated on the engine or the number of miles on the vehicle when the test began and ended;

(iii) The names of all supervisory personnel involved in the conduct of the Production Compliance Audit;

(iv) A record and description of any repair performed, giving the date and time of the repair, the reason for it, the person authorizing it, and the names of all personnel involved in the supervision and performance of the repair;

(v) The date when the engine or vehicle was shipped from the assembly plant or associated storage facility and when it was received at the testing facility;

(vi) A complete record of all emission tests performed pursuant to this subpart (except tests performed by EPA directly), including all individual worksheets and/or other documentation relating to each test, or exact copies thereof, specifically—

(A) If testing heavy-duty gasoline engines, the record requirements specified in 40 CFR 1065.695;

(B) If testing heavy-duty diesel engines, the record requirements specified in 40 CFR 1065.695;

(C) If testing light-duty gasoline fueled trucks, the record requirements specified in §§ 86.142 (excluding all references to diesel vehicles) and 86.1542–84; and

(D) If the testing light-duty diesel trucks, the record requirements specified in § 86.142; and

(vii) A brief description of any significant Production Compliance Audit events commencing with the test engine or vehicle selection process, but not described by any subparagraph under paragraph (a)(2) of this section, including such extraordinary events as engine damage during shipment or vehicle accident.

(3) The manufacturer shall record the test equipment description, pursuant to paragraph (a)(1) of this section, for each test cell that was used to perform emission testing under this subpart.

(b) The manufacturer shall retain all records required to be maintained under this subpart for a period of six (6) years after completion of all testing. Records may be retained as hard copy or reduced to microfilm, punch cards, etc., depending upon the manufacturer's record retention procedure, provided that in every case all the information contained in the hard copy is retained.

[50 FR 35388, Aug. 30, 1985, as amended at 70 FR 40437, July 13, 2005]

§ 86.1109–87 Entry and access.

(a) To allow the Administrator to determine whether a manufacturer is complying with the provisions of this subpart, EPA Enforcement Officers are authorized to enter any of the following (during operating hours and upon presentation of credentials):

(1) Any facility where any engine or vehicle to be introduced into commerce or any emission related component is manufactured, assembled, or stored;

(2) Any facility where any tests conducted pursuant to a PCA request or any procedures or activities connected with these tests are or were performed;

(3) Any facility where any engine or vehicle which is being tested, was tested, or will be tested is present; and

(4) Any facility where any record or other document relating to any of the above is located.

(b) Upon admission to any facility referred to in paragraph (a) of this section, EPA Enforcement Officers are authorized to perform the following inspection-related activities:

(1) To inspect and monitor any aspects of engine or vehicle manufacture, assembly, storage, testing and other procedures, and the facilities in which these procedures are conducted.

(2) To inspect and monitor any aspect of engine or vehicle test procedures or activities, including, but not limited to, monitoring engine or vehicle selection, preparation, service or mileage accumulation, preconditioning, repairs, emission test cycles, and maintenance; and to verify calibration of test equipment;

(3) To inspect and make copies of any records or documents related to the assembly, storage, selection and testing of an engine or vehicle; and

(4) To inspect and photograph any part or aspect of any engine or vehicle and any component used in the assembly thereof that is reasonably related to the purpose of the entry.

(c) EPA Enforcement Officers are authorized to obtain reasonable assistance without cost from those in charge of a facility to help them perform any function listed in this subpart and are authorized to request the manufacturer conducting the PCA to make arrangement with those in charge of a facility operated for its benefit to furnish reasonable assistance without cost to EPA, whether or not the manufacturer controls the facility.

(d) EPA Enforcement Officers are authorized to seek a warrant or court order authorizing the EPA Enforcement Officers to conduct activities related to entry and access as authorized in this section, as appropriate, to execute the functions specified in this section. EPA Enforcement Officers may proceed ex parte to obtain a warrant whether or not the Enforcement Officers first attempted to seek permission of the manufacturer conducting the PCA or the party in charge of the facilities in question to conduct activities related to entry and access as authorized in this section.

(e) A manufacturer that conducts a PCA shall permit EPA Enforcement Officers who present a warrant or court order as described in paragraph (d) of this section to conduct activities related to entry and access as authorized in this section and as described in the warrant or court order. The manufacturer shall cause those in charge of its facility or a facility operated for its benefit to permit EPA Enforcement Officers to conduct activities related to entry and access as authorized in this section pursuant to a warrant or court order whether or not the manufacturer controls the facility. In the absence of such a warrant or court order, EPA Enforcement Officers may conduct activities related to entry and access as authorized in this section only upon the consent of the manufacturer or the party in charge of the facilities in question.

(f) It is not a violation of this part or the Clean Air Act for any person to refuse to permit EPA Enforcement Officers to conduct activities related to entry and access as authorized in this section without a warrant or court order.

(g) A manufacturer is responsible for locating its foreign testing and manufacturing facilities in jurisdictions in which local foreign law does not prohibit EPA Enforcement Officers from conducting the entry and access activities specified in this section. EPA will not attempt to make any inspections which it has been informed that local foreign law prohibits.

(h) For purposes of this section, the following definitions are applicable:

(1) *Presentation of Credentials* means display of the document designating a person as an EPA Enforcement Officer.

(2) Where engine or vehicle storage areas or facilities are concerned, *operating hours* means all times during which personnel other than custodial personnel are at work in the vicinity of the area or facility and have access to it.

(3) Where facilities or areas other than those covered by paragraph (h)(2) of this section are concerned, *operating hours* means all times during which an assembly line is in operation, engine or vehicle assembly is taking place, testing repair, service accumulation, preparation or compilation of records is taking place, or any other procedure or activity related to engine or vehicle

manufacture, assembly or testing is being carried out in a facility.

(4) *Reasonable assistance* includes, but is not limited to, clerical, copying, interpreting and translating services, and making personnel of the facility being inspected available during their working hours on an EPA Enforcement Officer's request to inform the EPA Enforcement Officer of how the facility operates and to answer his or her questions. Any employee whom an EPA Enforcement Officer requests the manufacturer to cause to appear for questioning will be entitled to be accompanied, represented and advised by counsel.

§ 86.1110–87 Sample selection.

(a) Engines or vehicles comprising a test sample which are required to be tested pursuant to a PCA in accordance with this subpart will be selected at the location and in the manner specified by EPA. If a manufacturer determines that the test engines or vehicles cannot be selected in the manner specified by EPA, an alternative selection procedure may be employed, provided that the manufacturer requests approval of the alternative procedure in advance of the start of test sample selection and that the Administrator approves the procedure.

(b) The manufacturer shall have assembled the test engines or vehicles of the configuration selected for testing using its normal mass production processes for engines or vehicles to be distributed into commerce. In the case of heavy-duty engines, if the test engines are selected at a location where they do not have their operational and emission control systems installed, EPA will specify the manner and location for selection of components to complete assembly of the engines. The manufacturer shall assemble these components onto the test engines using normal assembly and quality control procedures as documented by the manufacturer.

(c) No quality control, testing, or assembly procedures will be used on the completed test engine or vehicle or any portion thereof, including parts and subassemblies, that will not be used during the production and assembly of all other engines or vehicles of that configuration.

(d) The EPA Enforcement Officers may specify that they, rather than the manufacturer, will select the test engines or vehicles.

(e) The order in which test engines or vehicles are selected determines the order in which test results are to be used in applying the PCA testing plan in accordance with § 86.1112–87.

(f) The manufacturer shall keep on hand all engines or vehicles comprising the test sample until such time as a compliance level is determined in accordance with § 86.1112–87(a) except that the manufacturer may ship any tested engine or vehicle which has not failed in accordance with § 86.1112–87(f)(1). However, once the manufacturer ships any test engine or vehicle, it relinquishes the prerogative to conduct retests as provided in § 86.1111–87(i).

§ 86.1111–87 Test procedures for PCA testing.

(a)(1) For heavy-duty engines, the prescribed test procedure for PCA testing is the Federal Test Procedure as described in subparts N, I, and P of this part.

(2) For heavy-duty vehicles, the prescribed test procedure for PCA testing is described in subpart M of this part.

(3) For light-duty trucks, the prescribed test procedure for PCA testing is the Federal Test Procedure as described in subparts B and P of this part.

(4) During the testing of heavy-duty diesel engines, the manufacturer shall decide for each engine, prior to the start of the initial cold cycle, whether the measurement of background particulate is required for the cold and hot cycles to be valid. The manufacturer may choose to have different requirements for the cold and hot cycles. If a manufacturer chooses to require the measurement of background particulate, failure to measure background particulate shall void the test cycle regardless of the test results. If a test cycle is void, the manufacturer shall retest using the same validity requirements of the initial test.

(5) When testing light-duty trucks, the following exceptions to the test procedures in subpart B are applicable:

(i) The manufacturer may use gasoline test fuel meeting the specifications of paragraph (a) of § 86.113 for mileage accumulation. Otherwise, the manufacturer may use fuels other than those specified in this section only with advance approval of the Administrator.

(ii) The manufacturer may measure the temperature of the test fuel at other than the approximate midvolume of the fuel tank, as specified in paragraph (a) of § 86.131, and may drain the test fuel from other than the lowest point of the fuel tank, as specified in paragraph (b) of § 86.131, with the advance approval of the Administrator.

(iii) The manufacturer may perform additional preconditioning on PCA test vehicles other than the preconditioning specified in § 86.132 only if the additional preconditioning has been performed on certification test vehicles of the same configuration.

(iv) The manufacturer shall perform the heat build procedure 11 to 34 hours following vehicle preconditioning rather than according to the time period specified in paragraph (a) of § 86.133.

(v) The manufacturer may substitute slave tires for the drive wheel tires on the vehicle as specified in paragraph (e) of § 86.135, provided that the slave tires are the same size as the drive wheel tires.

(vi) The cold start exhaust emission test described in § 86.137 shall follow the heat build procedure described in § 86.133 by not more than one hour.

(vii) In performing exhaust sample analysis under § 86.140:

(A) When testing diesel vehicles, the manufacturer shall allow a minimum of 20 minutes warm-up for the HC analyzer, and a minimum of 2 hours warm-up for the CO, CO_2 and NO_X analyzers. [Power is normally left on for infrared and chemiluminescent analyzers. When not in use, the chopper motors of the infrared analyzers are turned off and the phototube high voltage supply to the chemiluminescent analyzers is placed in the standby position.]

(B) The manufacturer shall exercise care to prevent moisture from condensing in the sample collection bags.

(viii) The manufacturer need not comply with § 86.142, since the records required therein are provided under other provisions of this subpart.

(ix) In addition to the requirements of subpart B of this part, the manufacturer shall prepare gasoline-fueled vehicles as follows prior to exhaust emission testing:

(A) The manufacturer shall inspect the fuel system to insure the absence of any leaks of liquid or vapor to the atmosphere by applying a pressure of 14.5 ±0.5 inches of water to the fuel system, allowing the pressure to stabilize, and isolating the fuel system from the pressure source. Following isolation of the fuel system, pressure must not drop more than 2.0 inches of water in 5 minutes. If required, the manufacturer shall perform corrective action in accordance with paragraph (d) of this section.

(B) When performing this pressure check, the manufacturer shall exercise care to neither purge nor load the evaporative emission control system.

(C) The manufacturer shall not modify the test vehicle's evaporative emission control system by component addition, deletion, or substitution, except to comply with paragraph (a)(4)(ii) of this section if approved in advance by the Administrator.

(b)(1) The manufacturer shall not adjust, repair, prepare, or modify the engines or vehicles selected for testing and shall not perform any emission tests on engines or vehicles selected for testing pursuant to a PCA request unless the adjustment, repair, preparation, modification, or tests are documented in the manufacturer's engine or vehicle assembly and inspection procedures and are actually performed on all engines or vehicles produced or unless these adjustments or tests are required or permitted under this subpart or are approved in advance by the Administrator.

(2) For 1984 and later model years the Administrator may adjust or cause to be adjusted any engine parameter which the Administrator has determined to be subject to adjustment for certification, Selective Enforcement Audit and Production. Compliance Audit testing in accordance with § 86.084–22(e)(1), to any setting within the physically adjustable range of that

parameter, as determined by the Administrator in accordance with § 86.084–2(e)(3)(ii), prior to the performance of any tests. However, if the idle speed parameter is one which the Administrator has determined to be subject to adjustment, the Administrator shall not adjust it to any setting which causes a lower engine idle speed than would have been possible within the physically adjustable range of the idle speed parameter if the manufacturer had accumulated 125 hours of service on the engine or 4,000 miles on the vehicle under paragraph (c) of this section, all other parameters being identically adjusted for the purpose of the comparison. The manufacturer may be requested to supply information to establish such an alternative minimum idle speed. The Administrator, in making or specifying these adjustments, may consider the effect of the deviation from the manufacturer's recommended setting on emissions performance characteristics as well as the likelihood that similar settings will occur on in-use heavy-duty engines or light-duty trucks. In determining likelihood, the Administrator may consider factors such as, but not limited to, the effect of the adjustment on engine or vehicle performance characteristics and surveillance information from similar in-use engines or vehicles.

(c) Prior to performing emission testing on a PCA test engine, the manufacturer may accumulate on each engine a number of hours of service equal to the greater of 125 hours or the number of hours the manufacturer accumulated during certification on the emission-data engine corresponding to the configuration tested during PCA. Prior to performing emission testing on a PCA test vehicle, the manufacturer may accumulate a number of miles equal to the greater of 4,000 miles or the number of miles the manufacturer accumulated during certification on the emission-data vehicle corresponding to the configuration tested during PCA. Service or mileage accumulation may be performed in any manner the manufacturer desires.

(d) No maintenance shall be performed on test engines or vehicles after selection for testing nor will any test engine or vehicle substitution or replacement be allowed, unless requested of and approved by the Administrator in advance of the performance of any maintenance or engine or vehicle substitution.

(e) The manufacturer shall expeditiously ship test engines or vehicles from the point of selection to the test facility or other location to meet any other requirements of this subpart. If the test facility is not located at or in close proximity to the point of selection, the manufacturer shall assure that test engines or vehicles arrive at the test facility within 24 hours of selection, except that the Administrator may approve more time based upon a request by the manufacturer accompanied by a satisfactory justification.

(f) If an engine or vehicle cannot complete the service or mileage accumulation or emission tests because of engine or vehicle malfunction, the manufacturer may request that the Administrator authorize the repair of the engine or vehicle. If the engine or vehicle cannot be repaired expeditiously, EPA may delete it from the test sequence.

(g)(1) Heavy-duty engine manufacturers with projected sales bound for the United States market for that year of 30,000 or greater, as made in their respective Applications for Certification, shall complete emission testing at their testing facility on a minimum of two engines per 24 hour period, including voided tests.

(2) Heavy-duty engine manufacturers with projected sales bound for the United States market for that year of less than 30,000, as made in their respective Applications for Certification, Shall complete emission testing at one engine per 24 hour period, including voided tests.

(3) Light-duty truck manufacturers shall complete emission testing on a minimum of four vehicles per 24 hour period, including voided tests.

(4) The Administrator may approve a longer period of time for conducting emission tests based upon a request by a manufacturer accompanied by a satisfactory justification.

(h) The manufacturer shall perform test engine or vehicle selection, shipping, preparation, service or mileage accumulation, and testing in such a

manner as to insure that the audit is performed in an expeditious manner.

(i) The manufacturer may retest any engines or vehicles tested during a Production Compliance Audit once a compliance level has been established in accordance with § 86.1112–87 based on the first test on each engine or vehicle. The Administrator may approve retesting at other times based upon a request by the manufacturer accompanied by a satisfactory justification. The manufacturer may test each engine or vehicle a total of three times. The manufacturer shall test each engine or vehicle the same number of times. The manufacturer may accumulate additional service or mileage before conducting a retest, subject to the provisions of paragraph (c) of this section.

[50 FR 35388, Aug. 30, 1985, as amended at 62 FR 47123, Sept. 5, 1997]

§ 86.1112–87 Determining the compliance level and reporting of test results.

(a) A manufacturer that has elected to conduct a PCA in accordance with § 86.1106–87 may establish the compliance level for a pollutant for any engine or vehicle configuration by using the primary PCA sampling plan or either of two optional reduced PCA sampling plans (the fixed reduced sampling plan or the sequential reduced sampling plan) described below. A manufacturer that uses either of the two optional reduced PCA sampling plans may elect to continue testing and establish a compliance level under the primary PCA sampling plan.

(1) A manufacturer that elects to conduct a PCA for a pollutant using the primary PCA sampling plan shall:

(i) Conduct emission tests on 24 engines or vehicles in accordance with § 86.1111–87 for the pollutants for which the PCA was initiated. If the PCA follows an SEA failure, the number of additional tests conducted shall be the difference between 24 and the number of engines or vehicles tested in the SEA. If 24 or more engines or vehicles were tested in the SEA, no additional tests shall be conducted; and

(ii) Rank the final deteriorated test results, as defined by paragraph (e) of this section, obtained for that pollutant in order from the lowest to the highest value. If the PCA follows an SEA failure, all SEA test results for that pollutant shall be included in this ranking.

(iii) The compliance level for that pollutant is the final deteriorated test result in the sequence determined from table 1 of appendix XII of these regulations.

(2) A manufacturer that elects to conduct a PCA for a pollutant using the fixed reduced PCA sampling plan shall:

(i) Select a sample size between 3 and 23 engines or vehicles. If the PCA follows an SEA failure, the sample size selected cannot be less than the number of engines or vehicles tested during the SEA; and

(ii) Conduct emission tests on the selected sample in accordance with § 86.1111–87 for the pollutants for which the PCA was initiated.

(iii) The compliance level for the pollutant is the result of the following equation, using the test results obtained in paragraph (a)(2)(ii) of this section and all SEA test results for that pollutant if the PCA follows an SEA failure:

$$CL = \bar{X} + Ks$$

where:

CL=The compliance level.

$\bar{X}$=The mean of the final deteriorated test results, as defined by paragraph (e) of this section.

K=A value that depends on the size of the test sample. See table 2 of appendix XII of this part for the value of K that corresponds to the size of the test sample.

s=The sample standard deviation.

The compliance level is rounded to the same number of significant figures contained in the applicable standard in accordance with ASTM E29–67.

(3) A manufacturer that elects to conduct a PCA for a pollutant using the sequential reduced PCA sampling plan shall perform the following:

(i) Select a sample size of 4, 8, 12, 16 or 20 engines or vehicles. If the PCA follows an SEA failure, the sample size selected cannot be less than the number of engines or vehicles tested during the SEA.

(ii) Conduct emission tests on the selected sample in accordance with

§ 86.1111–87 for the pollutants for which the PCA was initiated.

(iii) The compliance level for the pollutant is the result of the following equation, using the test results obtained in (a)(3)(ii) and all SEA test results for that pollutant if the PCA follows an SEA failure:

$$CL = \bar{X} + Ks$$

where:

CL=The compliance level.

$\bar{X}$=The mean of the final deteriorated test results, as defined by paragraph (e) of this section.

K=A value that depends on the size of the test sample. See table 3 of appendix XII of this part for the value of K that corresponds to the size of the test sample.

s=The sample standard deviation.

The compliance level is rounded to the same number of significant figures contained in the applicable standard in accordance with ASTM E29–67.

(iv) After calculating a compliance level in accordance with paragraph (a)(3)(iii) of this section, a manufacturer may elect to increase the sample size by 4 engines or vehicles, or a multiple thereof, up to the maximum, including SEA engines or vehicles if any, of 20. Upon that election, the manufacturer shall add the additional engines or vehicles to the sample and perform paragraphs (a)(3)(ii) and (a)(3)(iii) of this section. This election may be repeated if appropriate. A compliance level determined under this election shall replace a previously determined compliance level.

(b) A fail decision is reached with respect to the upper limit when the compliance level determined in paragraph (a) of this section exceeds the applicable upper limit.

(c) Initial test results are calculated following the Federal Test Procedure specified in § 86.1111–87(a).

(d) Final test results are calculated by summing the initial test results derived in paragraph (c) of this section for each test engine or vehicle, dividing by the number of tests conducted on the engine or vehicle, and rounding in accordance with ASTM E29–67 to the same number of decimal places contained in the applicable standard expressed to one additional significant figure.

(e) Final deteriorated test results. (1) The final deteriorated test results for each heavy-duty engine or light-duty truck tested according to subpart B, I, N, or P of this part are calculated by applying the final test results by the appropriate deterioration factor, derived from the certification process for the engine family control system combination and model year for the selected configuration to which the test engine or vehicle belongs. If the deterioration factor computed during the certification process is multiplicative and it is less than one, that deterioration factor will be one. If the deterioration factor computed during the certification process is additive and it is less than zero, that deterioration factor will be zero.

(2) The final deteriorated test results are rounded to the same number of significant figures contained in the applicable standard in accordance with ASTM E29–67.

(f) A failed engine or vehicle is one whose final deteriorated test results, for one or more of the applicable exhaust pollutants, exceed:

(1) The applicable emission standard, or

(2) The compliance level established in paragraph (b) of this section.

(g) Within five working days after completion of PCA testing of all engines or vehicles, the manufacturer shall submit to the Administrator a report which includes the following information:

(1) The location and description of the manufacturer's emission test facilities which were utilized to conduct testing reported pursuant to this section;

(2) The applicable standards against which the engines or vehicles were tested;

(3) Deterioration factors for the engine family to which the selected configuration belongs;

(4) A description of the engine or vehicle and any emission-related component selection method used;

(5) For each test conducted:

(i) Test engine or vehicle description, including;

(A) Configuration and engine family identification,

(B) Year, make and build date,

(C) Engine or vehicle identification number, and

(D) Number of hours of service accumulated on engine or number of miles on vehicle prior to testing;

(ii) Location where service or mileage accumulation was conducted and description of accumulation procedure and schedule;

(iii) Test number, date, initial test results before and after rounding, final test results and final deteriorated test results for all emission tests, whether valid or invalid, and the reason for invalidation, if applicable;

(iv) A complete description of any modification, repair, preparation, maintenance, and/or testing which was performed on the test engine or vehicle and has not been reported pursuant to any other paragraph of this subpart and will not be performed on all other production engines or vehicles; and

(v) Any other information the Administrator may request relevant to the determination as to whether the new heavy-duty engines or heavy-duty vehicles being manufactured by the manufacturer do in fact conform with the regulations of this subpart; and

(6) The following statement and endorsement:

This report is submitted pursuant to section 206 of the Clean Air Act. This Production Compliance Audit was conducted in complete conformance with all applicable regulations under 40 CFR part 86 et seq. All data and information reported herein is, to the best of (Company Name)_____'s knowledge, true and accurate. I am aware of the penalties associated with violations of the Clean Air Act and the regulations thereunder.

_____

(Authorized Company Representative)

§ 86.1113–87 Calculation and payment of penalty.

(a) The NCP for each engine or vehicle for which a compliance level has been determined under § 86.1112–87 is calculated according to the formula in paragraph (a)(1) or (a)(2) of this section depending on the value of the compliance level. Each formula contains an annual adjustment factor (AAF_i) which is defined in paragraph (a)(3) of this section. Other terms in the formulas are defined in paragraph (a)(4) of this section.

(1) If the compliance level (CL) is greater than the standard and less than or equal to X (e.g., point CL_1 in figure 1), then:

$$NCP_n = (PR_1)(CL - S)\left(\prod_{i=1}^{n} AAF_i\right)$$

where:

$PR_1 = (F)\ (MC_{50})$

(2) If the compliance level is greater than X and less than or equal to the upper limit as determined by § 86.1104–87 (e.g., point CL_2 in figure 1), then:

$$NCP_n = (COC_{50} + (PR_2)(CL - X))\left(\prod_{i=1}^{n} AAF_i\right)$$

where:

$$PR_2 = \frac{COC_{90} - COC_{50}}{UL - X}$$

(3) AAF_i has the following values:

(i) If $frac_{i-1} = 0$, then $AAF_i = 1 + I_{i-1}$

(ii) If $frac_{i-1} > 0$, then:

$$AAF_i = 1 + I_{i-1} + A_i\left[\frac{1}{1 - frac_{i-1}}\right]^i$$

Figure 1

Penalty vs. Compliance Level

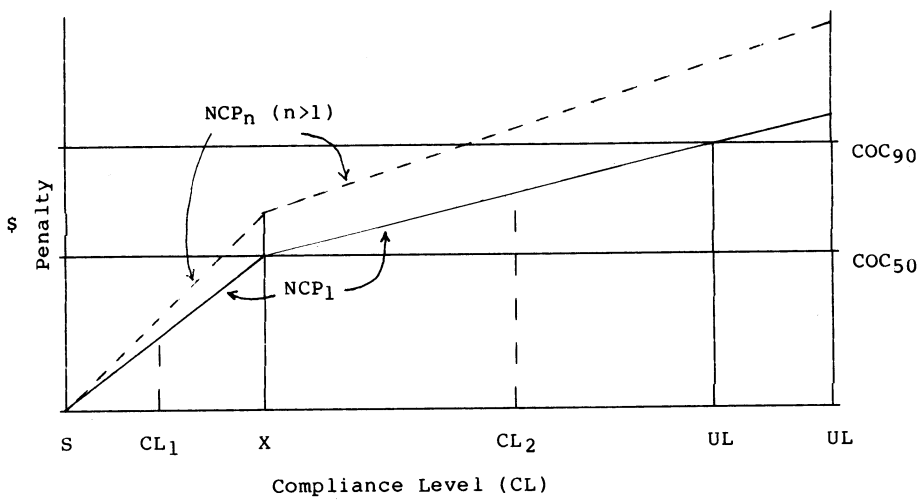

If $frac_{i-1}$ >0.50, then $frac_{i-1}$ will be set equal to 0.50.

(iii) AAF_1=1

(iv) In calculating the NCP for year n, the value $frac_{i-1}$ for i=n will include actual NCP usage through March 31 of model year n–1 and EPA's estimate of additional usage for the remainder of model year n-1 using manufacturer input. All manufacturers using NCPs must report by subclass actual NCP and non-NCP production numbers through March 31, an estimate of NCP and non-NCP production for the remainder of the model year, and the previous year's actual NCP and non-NCP production to EPA no later than April 30 of the model year. If EPA is unable to obtain similar information from manufacturers not using NCPs, EPA will use projected sales data from the manufacturers' application for certification in computing the total production of the subclass and the $frac_{i-1}$. The value of $frac_{i-1}$ will be corrected to reflect actual year-end usage of NCPs and a corrected AAF will be used to establish NCPs in future years. The correction of previous year's AAF will not affect the previous year's penalty.

(4) The terms in the above formulas have the following meanings and values, which may be determined separately for each subclass and pollutant for which an NCP is offered. The production of Federal and California designated engines or vehicles shall be combined for the purpose of this section in calculating the NCP for each engine or vehicle.

NCP_n=NCP for year n for each applicable engine or vehicle

CL=Compliance level for year n for applicable engines or vehicles

S=Emission standard

UL=Upper limit as determined by section 86.1104–87, except that, if the upper limit is determined by section 86.1104–87(c), the value of UL in paragraph (a)(2) of this section shall be the prior emission standard for that pollutant.

UL′=Upper limit as determined by section 86.1104–87(c). This value is not used in the above formulas.

X=Compliance level above the standard at which NCP_1 equals COC_{50}

$$X = \frac{COC_{50}}{(F)(MC_{50})} + S$$

PR_1=Penalty rate when $CL \leq X$
PR_2=Penalty rate when $X < CL \leq$ applicable upper limit

$$\prod_{i=1}^{n} AAF_i = \text{Running product, i.e., } (AAF_1) \times (AAF_2) \times \cdots \times (AAF_n)$$

i=An index representing a year. It represents the same year for both Federal and California designated engines or vehicles of the same production model year.

n=Index representing the number of model years for which the NCP has been available for an engine or vehicle subclass (i.e., n=1 for the first year that the NCP is available, and so on until n=n for the nth year that the NCP is available). The factor ''n'' is based on the model year the NCP is first available, as specified in section 86.1105–87 for the engine or vehicle subclass and pollutant for both Federal and California designated engines and vehicles.

COC_{50}=Estimate of the average total incremental cost to comply with the standard relative to complying with the upper limit.

COC_{90}=Estimate of the 90th percentile total incremental cost to comply with the standard relative to complying with the upper limit.

MC_{50}=Estimate of the average marginal cost of compliance (dollars per emission unit) with the standard.

F=Factor used to estimate the 90th percentile marginal cost based on the average marginal cost (the minimum value of F is 1.1, the maximum value of F is 1.3).

AAF_i=Annual adjustment factor for year i, $frac_{i-1}$=Fraction of engines or vehicles of a subclass using NCPs in previous year (year i-1).

A_i=Usage adjustment factor in year i: A_i=0.10 for i=2; A_i=0.08 for i<2.

I_i=Percentage increase in overall consumer price index in year i.

(5) The values of COC_{50}, COC_{90}, MC_{50} and F will be determined for each applicable subclass by EPA based on the cost data used by EPA in setting the applicable emission standard. However, where the rulemaking to establish a specific NCP occurs after the rulemaking to establish the standard, EPA may augment the data base used to establish the standard by including the best cost and emission performance data available to EPA during the specific NCP rulemaking.

(6) In calculating the NCP, appropriate values of the following predefined terms should be used: CL, S, UL, F, and A_i. For all other terms, unrounded values of at least five figures beyond the decimal point should be used in calculations leading up to the penalty amount. Any NCP calculated under paragraph (a) of this section will be rounded to the nearest dollar in accordance with ASTM E29–67.

(b) The NCP determined in paragraph (a) of this section is assessed against all those engines or vehicles of the nonconforming configuration or engine family produced at all assembly plants and distributed into commerce—

(1) Since the beginning of the model year in the case of a certification failure described by §86.1106–87(a).

(2) Beginning ten days after an SEA failure described by §86.1106–87 (b) or (c).

(3) Following implementation of a production running change described by §86.1106–87(d).

(c) The NCP will continue to be assessed during the model year, until such time, if any, that the configuration or engine family is brought into conformance with applicable emission standards.

(d) A manufacturer may carry over an NCP from a model year to the next model year. There is no limit to the number of years that carryover can continue. The amount of the penalty will increase each year according to paragraph (a) of this section.

(e) The Administrator shall notify the manufacturer in writing of the nonconformance penalty established under paragraph (a) of this section after the completion of the PCA under §86.1112–87.

(f) A manufacturer may request a hearing under §86.1115–87 as to whether

the compliance level (including a compliance level in excess of the upper limit) was determined in accordance with the procedures in § 86.1112–87(a) or whether the nonconformance penalty was calculated in accordance with the procedures in § 86.1113–87(a). If a nonconformance penalty has been established, such hearing must be requested within fifteen (15) days or such other period as may be allowed by the Administrator after the notification of the nonconformance penalty. If a manufacturer wishes to challenge a compliance level in excess of the upper limit, he must request a hearing within fifteen (15) days or such other period as may be allowed by the Administrator after the completion of the Production Compliance Audit.

(g)(1) Except as provided in paragraph (g)(2) of this section, the nonconformance penalty or penalties assessed under this subpart must be paid as follows:

(i) By the quarterly due dates, i.e., within 30 days of the end of each calendar quarter (March 31, June 30, September 30 and December 31), or according to such other payment schedule as the Administrator may approve pursuant to a manufacturer's request, for all nonconforming engines or vehicles produced by a manufacturer in accordance with paragraph (b) of this section and distributed into commerce for that quarter.

(ii) The penalty shall be payable to U.S. Environmental Protection Agency, NCP Fund, P.O. Box 360277M, Pittsburgh, PA 15251.

(2) When a manufacturer has requested a hearing under § 86.1115–87, it must pay the nonconformance penalty, and any interest, within ten days after the Presiding Officer renders his decision, unless the manufacturer first files a notice of intention to appeal to the Administrator pursuant to § 86.1115–87(t)(1), or, if an appeal of the Presiding Officer's decision is taken, within ten days after the Administrator renders his decision, unless the manufacturer first files a petition for judicial review.

(3) A manufacturer making payment under paragraph (g)(1) or (g)(2) of this section shall submit the following information by each quarterly due date to: Director, Manufacturers Operations Division, U.S. Environmental Protection Agency, 1200 Pennsylvania Ave., NW., Washington, DC 20460. This information shall be submitted even if a manufacturer has no NCP production in a given quarter.

(i) Corporate identification, identification and quantity of engines or vehicles subject to the NCP, certificate identification (number and date), NCP payment calculations and interest payment calculations, if applicable.

(ii) The following statement and endorsement:

This information is submitted pursuant to section 206 of the Clean Air Act. All information reported herein is, to the best of

_____'s
(Company name)

knowledge, true and accurate. I am aware of the penalties associated with violations of the Clean Air Act and the regulations thereunder.

_____
(Authorized Company Representative)

(4) The Administrator may verify the production figures or other documentation submitted under paragraph (g)(3) of this section.

(5)(i) Interest shall be assessed on any nonconformance penalty for which payment has been withheld under § 86.113–87(g) (1) or (2). Interest shall be calculated from the due date for the first quarterly NCP payment, as determined under § 86.1113–87(g)(1), until either the date on which the Presiding Officer or the Administrator renders the final decision of the Agency under § 86.1115–87 or the date when an alternate payment schedule (approved pursuant to § 86.1113–87(g)(1)) ends.

(ii) The combined principal plus interest on each quarterly NCP payment withheld pursuant to § 86.1113–87(g) (1) or (2) shall be calculated according to the formula:

QNCP(1 + R).25n

where:
QNCP=the quarterly NCP payment
R=the interest rate applicable to that quarter
n=the number of quarters for which the quarterly NCP payment is outstanding.

(iii) The number of quarters for which payment is outstanding for purposes of this paragraph shall be the number of quarterly NCP payment due

dates, as determined under § 86.1113–87(g)(1), which have elapsed throughout the duration of a hearing request, or alternate payment schedule.

(iv) The interest rate applicable to a quarter for purposes of this paragraph shall be the rate published by the Secretary of the Treasury pursuant to the Debt Collection Act of 1982 and effective on the date on which the NCP payment was originally due.

(6) A manufacturer will be refunded an overpayment, or be permitted to offset an overpayment by withholding a future payment, if approved in advance by the Administrator. The government shall pay no interest on overpayments.

(h) A manufacturer that certifies as a replacement for the nonconforming configuration, a configuration that is in conformance with applicable standards, and that performs a production compliance audit (PCA) in accordance with § 86.1112–87(a) that results in a compliance level below the applicable standard, will be eligible to receive a refund of a portion of the engineering and development component of the penalty. The engineering and development component will be determined by multiplying the base penalty amount by the engineering and development factor for the appropriate subclass and pollutant in § 86.1105–87. The amount refunded will depend on the model year in which the certification and PCA take place. In cases where payment of penalties have been waived by EPA in accordance with paragraph (g)(1)(iii) of this section, EPA will refund a portion of the engineering and development component. The proportionate refund to be paid by EPA will be based on the proportion of vehicles or engines of the nonconforming configuration for which NCPs were paid to EPA. The refund is calculated as follows:

$$R_{tot}=D_n \times F_{E\&D} \times NCP_1 \times Prod_{tot}$$

$$R_{Cal}=(Prod_{Cal}/Prod_{tot}) \times (R_{tot})$$

$$R_{EPA}=R_{tot}-R_{Cal}$$

Where:

n=index representing the number of model years for which the NCP has been available for an engine or vehicle subclass (i.e., n=1 for the first year that NCPs are available, . . . , n=n for the nth year the NCPs are available; same as ''n'' in paragraph (a)(4)).

D_n=discount factor depending on the number of model years (n) for which NCPs were available at the time of certification and PCA of the replacement configuration, and its value is as follows:

D_1=0.90
D_2=0.79
D_3=0.67
D_4=0.54
D_5=0.39
D_6=0.23
D_7=0.05
D_n=0.00 for n=8 or larger

$F_{E\&D}$=the engineering and development factor specified in section 86.1105–87 for the appropriate subclass and pollutant

NCP_1=the penalty for each engine or vehicle during the first (base) year the NCP is available as calculated in paragraph (a)

$Prod_{tot}$=total number of engines or vehicles produced in the subclass for which NCPs were paid to EPA or to the State of California

$Prod_{Cal}$=number of engines or vehicles in the subclass demonstrated to have been titled, registered or principally used in the State of California and for which NCPs were paid to the State of California under paragraph (g)(1)

R_{tot}=Total refund due to the manufacturer for the engineering and development component of the NCP

R_{Cal}=Refund due to the manufacturer from the State of California for the engineering and development component of the NCP

R_{EPA}=Refund due to the manufacturer from EPA for the engineering and development component of the NCP.

[50 FR 35388, Aug. 30, 1985, as amended at 50 FR 53467, Dec. 31, 1985; 53 FR 19134, May 26, 1988; 55 FR 46629, Nov. 5, 1990; 61 FR 51366, Oct. 2, 1996]

§ 86.1114–87 Suspension and voiding of certificates of conformity.

(a) The certificate of conformity is suspended with respect to any engine or vehicle failing pursuant to paragraph (f) of § 86.1112–87 effective from the time that a fail decision is made for that engine or vehicle.

(b) Once a certificate has been suspended for a failed engine or vehicle as provided for in paragraph (a) of this section, the manufacturer shall take the following actions:

(1) Before the certificate is reinstated for that failed engine or vehicle,

(i) Remedy the nonconformity, and

(ii) Demonstrate that the engine or vehicle conforms to the applicable standards or compliance levels by retesting the engine or vehicle in accordance with these regulations; and

(2) Submit a written report to the Administrator within five working days after successful completion of testing on the failed engine or vehicle, which contains a description of the remedy and test results for each engine or vehicle in addition to other information that may be required by this regulation.

(c) The Administrator may suspend the certificate of conformity if the manufacturer, after electing to conduct a PCA, fails to adhere to the requirements stated in § 86.1106–87(b)(3), (b)(6)(iii), (c)(2), or (c)(5)(iii).

(d) The Administrator may suspend the qualified certificate of conformity issued under the conditions specified in § 86.1106–87 if the manufacturer fails to adhere to the requirements stated in § 86.1106–87(a)(3), (a)(4)(iii), (d)(2)(iii), or (d)(3).

(e) The Administrator may suspend the certificate of conformity or the qualified certificate of conformity if the compliance level as determined in § 86.1112–87(a) is in excess of the upper limit.

(f) The Administrator may void the certificate of conformity if the compliance level as determined in § 86.1112–87(a) is in excess of the upper limit and the manufacturer fails to recall any engines or vehicles introduced into commerce pursuant to § 86.1106–87(a)(4)(ii), (b)(6)(ii), (c)(5)(ii) or (d)(2)(ii).

(g) The Administrator may void the certificate of conformity for those engines or vehicles for which the manufacturer fails to meet the requirements of § 86.1106–87(a)(4)(i), (b)(6)(i), (c)(5)(i), or (d)(2)(i).

(h) The Administrator shall notify the manufacturer in writing of any suspension or voiding of a certificate of conformity in whole or in part, except as provided for in paragraph (a) of this section.

(i) A certificate of conformity suspended or voided under paragaph (c), (d), (e), (f) or (g) of this section may be reinstated after a written request by the manufacturer and under such terms and conditions as the Administrator may require and after the manufacturer demonstrates compliance with applicable requirements.

(j) After the Administrator suspends or voids a certificate of conformity pursuant to this section or notifies a manufacturer of his intent to suspend or void a certificate of conformity under § 86.087–30(e), and prior to the commencement of a hearing, if any, under § 86.1115–87, if the manufacturer demonstrates to the Administrator's satisfaction that the decision to suspend or void the certificate was based on erroneous information, the Administrator shall reinstate the certificate.

§ 86.1115–87 Hearing procedures for nonconformance determinations and penalties.

(a) *Applicability*. The procedures prescribed by this section shall apply whenever a manufacturer requests a hearing pursuant to § 86.087–30(e)(6)(i), § 86.087–30(e)(7), or § 86.1113–87(f).

(b) *Definitions*. The following definitions shall be applicable to this section:

(1) *Hearing Clerk* shall mean the Hearing Clerk of the Environmental Protection Agency.

(2) *Manufacturer* means a manufacturer contesting a compliance level or penalty determination sent to the manufacturer.

(3) *Party* means the Agency and the manufacturer.

(4) *Presiding Officer* shall mean an Administrative Law Judge appointed pursuant to 5 U.S.C. 3105 (see also 5 CFR part 930 as amended).

(5) *Environmental Appeals Board* shall mean the Board within the Agency described in § 1.25 of this title. The Administrator delegates authority to the Environmental Appeals Board to issue final decisions in appeals filed under this subpart. Appeals directed to the Administrator, rather than to the Environmental Appeals Board, will not be considered. This delegation of authority to the Environmental Appeals Board does not preclude the Environmental Appeals Board from referring an appeal or a motion filed under this subpart to the Administrator for decision when the Environmental Appeals Board, in its discretion, deems it appropriate to do so. When an appeal or motion is referred to the Administrator, all parties shall be so notified and the rules in this part referring to the Environmental Appeals Board shall

be interpreted as referring to the Administrator.

(c) *Request for public hearing.* (1) A manufacturer may request a hearing pursuant to § 86.1113–87(f) if it disagrees with the Administrator's determination of compliance level or penalty calculation or both, or pursuant to § 86.085–30(e)(6)(i) or § 86.085–30(e)(7) if it disagrees with the Administrator's proposed suspension or voiding of a certificate of conformity. Requests for such a hearing shall be filed no later than 15 days:

(i) After receipt of the Administrator's notification of NCP, if the compliance level is in the allowable range of non-conformity, or

(ii) After completion of the Production Compliance Audit, if the compliance level exceeds the upper limit, or

(iii) After receipt of the Administrator's notification of a proposed suspension or voiding of a certificate of conformity if the hearing is requested pursuant to §§ 86.085–30(e)(6)(i) or 86.085–30(e)(7), unless otherwise specified by the Administrator. The manufacturer shall simultaneously serve two copies of this request upon the Director of the Manufacturers Operations Division and file two copies with the Hearing Clerk. Failure of the manufacturer to request a hearing within the time provided constitutes a waiver of the right to a hearing. Subsequent to the expiration of the period for requesting a hearing as of right, the Administrator may, in his discretion and for good cause shown, grant the manufacturer a hearing to contest the compliance level or penalty calculation.

(2) The request for a public hearing shall contain:

(i) A statement as to which vehicle or engine subclasses or configurations are to be the subject of the hearing;

(ii) A concise statement of the issues to be raised by the manufacturer at the hearing for each vehicle or engine subclass or configuration for which the manufacturer has requested the hearing. *Provided, however,* That in the case of a hearing requested under § 86.1113–87(f), the hearing shall be restricted to the following issues:

(A) Whether the compliance level was determined in accordance with the procedures in § 86.1112–87(a); or

(B) Whether the penalty was calculated in accordance with the procedures in § 86.1113–87(a).

(iii) A statement specifying reasons why the manufacturer believes it will prevail on the merits on each of the issues so raised; and

(iv) A summary of the evidence which supports the manufacturer's position on each of the issues so raised.

(3) A copy of all requests for public hearings shall be kept on file in the Office of the Hearing Clerk and shall be made available to the public during Agency business hours.

(d) *Summary decision.* (1) In the case of a hearing requested under § 86.1113–87(f) when it clearly appears from the data and other information contained in the request for a hearing that there is no genuine and substantial question of fact with respect to the issues specified in § 86.1115–87(c)(2)(ii), the Administrator will enter an order denying the request for a hearing, and reaffirming the original compliance level determination or penalty calculation.

(2) Any order issued under paragraph (d)(1) of this section shall have the force and effect of a final decision of the Administrator, as issued pursuant to paragraph (v)(4) of this section.

(3) If the Administrator determines that a genuine and substantial question of fact does exist with respect to any of the issues referred to in paragraph (d)(1) of this section, he shall grant the request for a hearing and publish a notice of public hearing in accordance with paragraph (h) of this section.

(e) *Filing and service.* (1) An original and two copies of all documents or papers required or permitted to be filed pursuant to this section shall be filed with the Hearing Clerk. Filing shall be deemed timely if mailed, as determined by the postmark to the Hearing Clerk within the time allowed by this section. If filing is to be accomplished by mailing, the documents shall be sent to the address set forth in the notice of public hearing as described in paragraph (h) of this section.

(2) To the maximum extent possible, testimony shall be presented in written form. Copies of written testimony shall be served upon all parties as soon as practicable prior to the start of the

hearing. A certificate of service shall be provided on or accompany each document or paper filed with the Hearing Clerk. Documents to be served upon the Director of the Manufacturers Operations Division shall be sent by registered mail to: Director, Manufacturers Operations Division, U.S. Environmental Protection Agency (EN–340F), 1200 Pennsylvania Ave., NW., Washington, DC 20460. Service by registered mail is complete upon mailing.

(f) *Time.* (1) In computing any period of time prescribed or allowed by this section, except as otherwise provided, the day of the act or event from which the designated period of time begins to run shall not be included. Saturdays, Sundays, and Federal legal holidays shall be included in computing any such period allowed for the filing of any document or paper, except that when such a period expires on a Saturday, Sunday, or Federal legal holiday, such period shall be extended to include the next following business day.

(2) A prescribed period of time within which a party is required or permitted to do an act shall be computed from the time of service, except that when service is accomplished by mail, three days shall be added to the prescribed period.

(g)(1) *Consolidation.* The Administrator of the Presiding Officer in his discretion may consolidate two or more proceedings to be held under this section for the purpose of resolving one or more issues whenever it appears that such consolidation will expedite or simplify consideration of such issues. Consolidation shall not affect the right of any party to raise issues that could have been raised if consolidation had not occurred.

(2) If a vehicle or engine is determined to be in nonconformity during certification testing under subpart A of this part, then the manufacturer may wait to challenge the determination until after production compliance auditing and calculation of his penalty and may consolidate challenges to the determination of nonconformity and the compliance level determination or the penalty calculation, without losing any rights he would otherwise have had.

(3) If a vehicle or engine is determined to be in nonconformity during selective enforcement auditing under subpart K of this part, then the manufacturer must wait to challenge the determination until after the compliance level determination and the penalty calculation, and must consolidate challenges to the determination of nonconformity and the compliance level determination or the calculation of the penalty.

(h) *Notice of public hearings.* (1) Notice of public hearing under this section shall be given by publication in the FEDERAL REGISTER and by such other means as the Administrator finds appropriate to provide notice to the public. To the extent possible, hearings under this section shall be scheduled to commence within 30 days of receipt of the application in paragraph (c) of this section.

(2) [Revised]

(i) *Amicus curiae.* Persons not parties to the proceeding wishing to file briefs may do so by leave of the Presiding Officer granted on motion. A motion for leave shall identify the interest of the applicant and shall state the reasons why the proposed amicus brief is desirable.

(j) *Presiding Officer.* The Presiding Officer shall have the duty to conduct a fair and impartial hearing in accordance with 5 U.S.C. 554, 556 and 557 and to take all necessary action to avoid delay in the disposition of the proceedings and to maintain order. He shall have all power consistent with Agency rules and with the Administrative Procedure Act necessary to this end, including the following:

(1) To administer oaths and affirmations;

(2) To rule upon offers of proof and exclude irrelevant or repetitious material;

(3) To regulate the course of the hearings and the conduct of the parties and their counsel therein;

(4) To hold conferences for simplification of the issues or any other proper purpose;

(5) To consider and rule upon all procedural and other motions appropriate in such proceedings;

(6) To require the submission of direct testimony in written form with or

without affidavit whenever, in the opinion of the Presiding Officer, oral testimony is not necessary for full and true disclosure of the facts;

(7) To enforce agreements and orders requiring access as authorized by law;

(8) To require the filing of briefs on any matter on which he is required to rule;

(9) To require any party or any witness, during the course of the hearing, to state his position on any issue;

(10) To take or cause depositions to be taken whenever the ends of justice would be served thereby;

(11) To make decisions or recommend decisions to resolve the disputed issues on the record of the hearing;

(12) To issue, upon good cause shown, protective orders as described in paragraph (n) of this section.

(k) *Conferences.* (1) At the discretion of the Presiding Officer, conferences may be held prior to or during any hearing. The Presiding Officer shall direct the Hearing Clerk to notify all parties of the time and location of such conference. At the discretion of the Presiding Officer, persons other than parties may attend. At a conference the Presiding Officer may:

(i) Obtain stipulations and admissions, receive requests and order depositions to be taken, identify disputed issues of fact and law, and require or allow the submission of written testimony from any witness or party;

(ii) Set a hearing schedule for as many of the following as are deemed necessary by the Presiding Officer:

(A) Oral and written statements;

(B) Submission of written direct testimony as required or authorized by the Presiding Officer;

(C) Oral direct and cross-examination of a witness where necessary as prescribed in paragraph (p) of this section; and

(D) Oral argument, if appropriate.

(iii) Identify matters of which official notice may be taken;

(iv) Consider limitation of the number of expert and other witnesses;

(v) Consider the procedure to be followed at the hearing; and

(vi) Consider any other matter that may expedite the hearing or aid in the disposition of the issue.

(2) The results of any conference including all stipulations shall, if not transcribed, be summarized in writing by the Presiding Officer and made part of the record.

(l) *Primary discovery (exchange of witness lists and documents).* (1) At a prehearing conference or within some reasonable time set by the Presiding Officer prior to the hearing, each party shall make available to the other parties the names of the expert and other witnesses the party expects to call, together with a brief summary of their expected testimony and list of all documents and exhibits which the party expects to introduce into evidence. Thereafter, witnesses, documents, or exhibits may be added and summaries of expected testimony amended upon motion by a party.

(2) The Presiding Officer may upon motion by a party or other person, and for good cause shown, by order

(i) Restrict or defer disclosure by a party of the name of a witness or a narrative summary of the expected testimony of a witness, and

(ii) Prescribe other appropriate measures to protect a witness. Any party affected by any such action shall have an adequate opportunity, once he learns the name of a witness and obtains the narrative summary of this expected testimony, to prepare for the presentation of this case.

(m) *Other discovery.* (1) Except as provided by paragraph (m)(1) of this section, further discovery under this paragraph shall be permitted only upon determination by the Presiding Officer:

(i) That such discovery will not in any way unreasonably delay the proceeding;

(ii) That the information to be obtained is not obtainable voluntarily; and

(iii) That such information has significant probative value. The Presiding Officer shall be guided by the procedures set forth in the Federal Rules of Civil Procedure, where practicable, and the precedents thereunder, except that no discovery shall be undertaken except upon order of the Presiding Officer or upon agreement of the parties.

(2) The Presiding Officer shall order depositions upon oral questions only

upon a showing of good cause and upon a finding that:

(i) The information sought cannot be obtained by alternative methods; or

(ii) There is a substantial reason to believe that relevant and probative evidence may otherwise not be preserved for presentation by a witness at the hearing.

(3) Any party to the proceeding desiring an order of discovery shall make a motion or motions therefor. Such a motion shall set forth:

(i) The circumstances warranting the taking of the discovery;

(ii) The nature of the information expected to be discovered; and

(iii) The proposed time and place where it will be taken. If the Presiding Officer determines the motion should be granted, he shall issue an order for the taking of such discovery together with the conditions and terms thereof.

(4) Failure to comply with an order issued pursuant to this paragraph may lead to the inference that the information to be discovered would be adverse to the person or party from whom the information was sought.

(n) *Protective orders, in camera proceedings.* (1) Upon motion by a party or by the person from whom discovery is sought, and upon a showing by the movant that the disclosure of the information to be discovered, or a particular part thereof (other than emission data), would result in methods or processes entitled to protection as trade secrets of the person being divulged, the Presiding Officer may enter a protective order with respect to such material. Any protective order shall contain such terms governing the treatment of the information as may be appropriate under the circumstances to prevent disclosure outside the hearing, *provided* that the order shall state that the material shall be filed separately from other evidence and exhibits in the hearing. Disclosure shall be limited to parties to the hearing, their counsel and relevant technical consultants, and authorized representatives of the United States concerned with carrying out the Act. Except in the case of the government, disclosure may be limited to counsel for parties who shall not disclose such information to the parties themselves. Except in the case of the government, disclosure to a party or his counsel shall be conditioned on execution of a sworn statement that no disclosure of the information will be made to persons not entitled to receive it under the terms of the protective order. (No such provision is necessary where government employees are concerned because disclosure by them is subject to the terms of 18 U.S.C. 1905.)

(2)(i) A party or person seeking a protective order may be permitted to make all or part of the required showing in camera. A record shall be made of such in camera proceedings. If the Presiding Officer enters a protective order following a showing in camera, the record of such showing shall be sealed and preserved and made available to the Agency or court in the event of appeal.

(ii) Attendance at any in camera proceeding may be limited to the Presiding Officer, representatives of the Agency, and the person or party seeking the protective order.

(3) Any party, subject to the terms and conditions of any protective order issued pursuant to paragraph (n)(1) of this section, that desires to make use of any in camera documents or testimony in the presentation of his case shall apply to the Presiding Officer by motion for permission to do so, and shall state the justification for the motion. The Presiding Officer, in granting any such motion, shall enter an order protecting the rights of the affected persons and parties as far as is practicable, and preventing unnecessary disclosure of such information and testimony concerning such information.

(4) In the submittal of proposed findings, briefs, or other papers, counsel for all parties shall make a good faith attempt to refrain from disclosing the specific details of in camera documents and testimony. This shall not preclude references in such proposed findings, briefs, or other papers to such documents or testimony. This shall not preclude references in such proposed findings, briefs, or other papers marked ''confidential,'' which shall become part of the in camera record.

(o) *Motions.* (1) All motions, except those made orally during the course of the hearing, shall be in writing and

shall state with particularity the grounds therefore, shall set forth the relief or order sought, and shall be filed with the Hearing Clerk and served upon all parties.

(2) Within such time as may be fixed by the Environmental Appeals Board or the Presiding Officer, as appropriate, any party may serve and file an answer to the motion. The movant shall, if requested by the Environmental Appeals Board or the Presiding Officer, as appropriate, serve and file reply papers, within the time set by the request.

(3) The Presiding Officer shall rule upon all motions filed or made prior to the filing of his decision or accelerated decision, as appropriate. The Environmental Appeals Board shall rule upon all motions filed prior to the appointment of a Presiding Officer and all motions filed after the filing of the decision of the Presiding Officer or accelerated decision. Oral argument of motions will be permitted only if the Presiding Officer or the Environmental Appeals Board, as appropriate, deems it necessary.

(p) *Evidence.* (1) The official transcripts and exhibits, together with all papers and requests filed in the proceeding, shall constitute the record. Immaterial or irrelevent parts of an admissible document shall be segregated and excluded so far as practicable. Documents or parts thereof subject to a protective order under paragraph (n) of this section shall be segregated. Evidence may be received at the hearing even though inadmissible under the rules of evidence applicable to judicial proceedings. The weight to be given evidence shall be determined by its reliability and probative value.

(2) The Presiding Officer shall allow the parties to examine and cross-examine a witness to the extent that such examination and cross-examination is necessary for a full and true disclosure of the facts.

(3) Rulings of the Presiding Officer on the admissibility of evidence, the propriety of examination and cross-examination and other procedural matters shall appear in the record.

(4) Parties shall automatically be presumed to have taken exception to an adverse ruling.

(q) *Record.* (1) Hearings shall be stenographically reported and transcribed and the original transcripts shall be part of the record. Copies of the records shall be filed with the Hearing Clerk and made available during Agency business hours for public inspection. Any person who wants a copy of the record of the hearing or any part thereof, except as provided in paragraph (n) of this section, shall be entitled to the same upon payment of the cost thereof.

(2) The official transcripts and exhibits, together with all papers and requests filed in the proceeding, shall constitute the record.

(r) *Proposed findings, conclusions.* (1) Within 30 days of the close of the reception of evidence, or within such longer time as may be fixed by the Presiding Officer, any party may submit for the consideration of the Presiding Officer proposed findings of fact, conclusions of law, and a proposed order, together with reasons therefore and briefs in support thereof. Such proposals shall be in writing, shall be served upon all parties, and shall contain adequate references to the record and authorities relied upon.

(2) The record shall show the Presiding Officer's ruling on the proposed findings and conclusions except when his order disposing of the proceeding otherwise informs the parties of the action taken by him.

(s) *Decision of the Presiding Officer.* (1) Unless extended by the Environmental Appeals Board, the Presiding Officer shall issue and file with the Hearing Clerk his decision within 30 days after the period for filing proposed findings has expired, as provided for in paragraph (c) of this section.

(2) The Presiding Officer's decision shall become the decision of the Environmental Appeals Board (i) 10 days after issuance thereof, if no notice of intention to appeal as described in paragraph (t) of this section is filed, unless in the interim the Environmental Appeals Board shall have taken action to review or stay the effective date of the decision; or (ii) 5 days after expiration of the period allowed by

paragraph (t)(1) of this section for perfection of an appeal, if a notice of intention to appeal is filed but the appeal is not perfected, unless within that 5 day period the Environmental Appeals Board shall have taken action to review or stay the effective date of the decision;

(3) The Presiding Officer's decision shall include a statement of findings and conclusions, as well as the reasons or basis therefore, upon all the material issues of fact or law presented on the record and an appropriate rule or order. Such decision shall be supported by substantial evidence and based upon a consideration of the whole record.

(4) At any time prior to the issuance of his decision, the Presiding Officer may reopen the proceeding for the reception of further evidence. Except for the correction of clerical errors, the jurisdiction of the Presiding Officer is terminated upon the issuance of his decision.

(t) *Appeal from the decision of the Presiding Officer.* (1) Any party to a proceeding may appeal the Presiding Officer's decision to the Environmental Appeals Board, *Provided,* That within 10 days after issuance of the Presiding Officer's decision such party files a notice of intention to appeal and an appeal brief within 20 days of such decision.

(2) When an appeal is taken from the decision of the Presiding Officer, any party may file a brief with respect to such appeal. The brief shall be filed within the same time limits as the appellant's brief.

(3) Any brief filed pursuant to this paragraph shall contain in the order indicated, the following:

(i) A subject index of the matter in the brief, with page references, and a table of cases (alphabetically arranged), textbooks, statutes, and other material cited, with page references thereto;

(ii) A specification of the issues intended to be appealed;

(iii) The argument, presenting clearly the points of fact and law relied upon in support of the position taken on each issue, with specific page references to the record and legal or other material relied upon; and

(iv) A proposed order for the Environmental Appeals Board's consideration if different from the order contained in the Presiding Officer's decision.

(4) No brief in excess of 15 pages shall be filed without leave of the Environmental Appeals Board.

(5) Oral argument will be allowed only in the discretion of the Environmental Appeals Board.

(u) *Review of the Presiding Officer's decision in absence of appeal.* (1) If, after the expiration of the period for taking an appeal as provided for by paragraph (t) of this section, no notice of intention to appeal the decision of the Presiding Officer has been filed, or if filed, not perfected, the Hearing Clerk shall so notify the Environmental Appeals Board.

(2) The Environmental Appeals Board, upon receipt of notice from the Hearing Clerk that no notice of intention to appeal has been filed, or if filed, not perfected pursuant to paragraph (t)(1) of this section, may, on its own motion, within 14 days after notice from the Hearing Clerk, review the decision of the Presiding Officer. Notice of the intention of the Environmental Appeals Board to review the decision of the Presiding Officer shall be given to all parties and shall set forth the scope of such review and the issues which shall be considered and shall make provisions for filing of briefs.

(v) *Decision of appeal or review.* (1) Upon appeal from or review of the Presiding Officer's the Environmental Appeals Board shall consider such parts of the record as are cited or as may be necessary to resolve the issues presented and in addition shall, to the extent necessary or desirable, exercise all the powers which it could have exercised if it had presided at the hearing.

(2) In rendering its decision, the Environmental Appeals Board shall adopt, modify, or set aside the findings, conclusions, and order contained in the decision of the Presiding Officer and shall set forth in its decision a statement of the reasons or bases for this action.

(3) In those cases where the Environmental Appeals Board determines that it should have further information or additional views of the parties as to the form and content of the rule or order to be issued, the Environmental

Appeals Board, in its discretion, may without final action pending the receipt of such additional information or views, or may remand the case to the Presiding Officer.

(4) Any decision rendered under this paragraph which completed disposition of a case shall be a final decision of the Environmental Appeals Board.

(w) *Reconsideration*. Any party may file with the Environmental Appeals Board a petition for reconsideration of such decision setting forth the relief desired and the grounds in support thereof. This petition must be filed within 20 days of the issuance of the Environmental Appeals Board's decision, and must be confined to new questions raised by the decision or final order and which the petitioner had no opportunity to argue before the Presiding Officer or the Environmental Appeals Board, unless otherwise specified by the Environmental Appeals Board. Subsequent to the expiration of the period for petitioning for reconsideration, the Environmental Appeals Board may, in its discretion and for good cause shown, grant the manufacturer a hearing to contest the compliance level or the penalty calculation even though such issues may have been raised in the previous proceeding. Any party desiring to oppose such a petition, shall file an answer thereto within 10 days after the filing of the petition. The filing of a petition for reconsideration shall not operate to stay the effective date of the decision or order or to toll the running of any statutory time period affecting such decision or order unless specifically so ordered by the Environmental Appeals Board.

(x) *Accelerated decision, dismissal*. (1) The Presiding Officer, upon motion of any party or sua sponte, may at any time render an accelerated decision in favor of the Agency or the manufacturer as to all or any part of the proceeding, without further hearing or upon such limited additional evidence such as affidavits as he may require, or dismiss any party with prejudice, for any of the following reasons:

(i) Failure to state a claim upon which relief can be granted, or direct or collateral estoppel;

(ii) The lack of any genuine issue of material fact, causing a party to be entitled to judgment as a matter of law; or

(iii) Such other and further reasons as are just, including specifically, failure to obey a procedural order of the Presiding Officer.

(2) If under this paragraph an accelerated decision is issued as to all the issues and claims joined in the proceeding, the decision shall be treated for the purposes of these procedures as the decision of the Presiding Officer, as provided in paragraph (s) of this section.

(3) If under this paragraph, judgment is rendered on less than all issues or claims in the proceeding, the Presiding Officer shall determine what material facts exist without substantial controversy and what material facts are actually and in good faith controverted. He shall thereupon issue an order specifying the facts which appear without substantial controversy, and the issues and claims upon which the hearing will proceed.

(y) *Conclusion of hearing*. (1) If, after the expiration of the period for taking an appeal as provided by paragraph (t) of this section, no appeal has been taken from the Presiding Officer's decision, and after the expiration of the period for review by the Environmental Appeals Board on its own motion as provided for by paragraph (u) of this section, the Environmental Appeals Board does not move to review such decision, the hearing will be deemed to have ended at the expiration of all periods allowed for such appeal and review.

(2) If an appeal of the Presiding Officer's decision is taken pursuant to paragraph (t) of this section, or if, in the absence of such appeal the Environmental Appeals Board moves to review the decision of the Presiding Officer pursuant to paragraph (u) of this section, the hearing will be deemed to have ended upon issuance of a final decision by the Environmental Appeals Board.

(z) *Judicial review*. (1) The Administrator hereby designates the General Counsel of the Environmental Protection Agency as the officer upon whom any copies for judicial review shall be served. Such officer shall be responsible for filing in the court the record

on which the order of the Environmental Appeals Board is based.

(2) [Reserved]

[50 FR 35388, Aug. 30, 1985, as amended at 50 FR 53467, Dec. 31, 1985; 55 FR 46630, Nov. 5, 1990; 57 FR 5333, Feb. 13, 1992]

§ 86.1116–87 Treatment of confidential information.

(a) Any manufacturer may assert that some or all of the information submitted pursuant to this subpart is entitled to confidential treatment as provided by 40 CFR part 2, subpart B.

(b) Any claim of confidentiality must accompany the information at the time it is submitted to EPA.

(c) To assert that information submitted pursuant to this subpart is confidential, a manufacturer must indicate clearly the items of information claimed confidential by marking, circling, bracketing, stamping, or otherwise specifying the confidential information. Furthermore, EPA requests, but does not require, that the submitter also provide a second copy of its submittal from which all confidential information has been deleted. If a need arises to publicly release nonconfidential information, EPA will assume that the submitter has accurately deleted the confidential information from this second copy.

(d) If a claim is made that some or all of the information submitted pursuant to this subpart is entitled to confidential treatment, the information covered by that confidentiality claim will be disclosed by the Environmental Appeals Board only to the extent and by means of the procedures set forth in part 2, subpart B, of this chapter.

(e) Information provided without a claim of confidentiality at the time of submission may be made available to the public by EPA without further notice to the submitter, in accordance with 40 CFR 2.204(c)(2)(i)(A).

[50 FR 34798, Aug. 27, 1985, as amended at 57 FR 5334, Feb. 13, 1992]

Subpart M—Evaporative Emission Test Procedures for New Gasoline-Fueled, Natural Gas-Fueled, Liquefied Petroleum Gas-Fueled and Methanol-Fueled Heavy-Duty Vehicles

AUTHORITY: Secs. 202, 206, 301, Clean Air Act as amended, 42 U.S.C. 7521, 7525, 7601.

SOURCE: 48 FR 1456, Jan. 12, 1983, unless otherwise noted.

§ 86.1201–90 Applicability.

(a) The provisions of this subpart are applicable to new gasoline-fueled, natural gas-fueled, liquefied petroleum gas-fueled and methanol-fueled heavy-duty vehicles.

(b) Provisions of this subpart apply to tests performed by both the Administrator and motor vehicle manufacturers.

(c) Test procedures and equipment other than those described in this subpart may be used by the vehicle manufacturer if shown to yield results which correlate with results yielded by those described in this subpart (with the reference driving schedule described in § 86.1215–85(a)) and if approved in advance by the Administrator.

[54 FR 14562, Apr. 11, 1989, as amended at 59 FR 48521, Sept. 21, 1994]

§ 86.1202–85 Definitions.

Applicable definitions in §§ 86.077–2, 86.078–2, 86.079–2, 86.080–2, 86.081–2, 86.082–2 and 86.085–2 apply to this subpart.

§ 86.1203–85 Abbreviations.

The abbreviations in § 86.079–3 apply to this subpart.

§ 86.1204 Section numbering.

The section numbering system set forth in § 86.104 applies to this subpart.

[59 FR 48521, Sept. 21, 1994]

§ 86.1205–90 Introduction; structure of subpart.

(a) This subpart describes the equipment required and the procedures to follow in order to determine evaporative emission levels from gasoline-

fueled, natural gas-fueled, liquefied petroleum gas-fueled and methanol-fueled heavy-duty vehicles.

(b) Three topics are addressed in this subpart. Sections 86.1206 through 86.1215 set forth specifications and equipment requirements; §§ 86.1216 through 86.1226 discuss calibration methods and frequency; test procedures and data requirements are listed in §§ 86.1227 through 86.1246.

[54 FR 14562, Apr. 11, 1989, as amended at 58 FR 16047, Mar. 24, 1993; 59 FR 48521, Sept. 21, 1994]

§ 86.1206–90 Equipment required; overview.

This subpart specifies procedures for testing of gasoline-fueled and methanol-fueled heavy-duty vehicles. Equipment required and specifications are as follows:

(a) *Evaporative emissions tests.* § 86.1207 specifies the necessary equipment.

(b) *Fuel, analytical gas, and driving schedule specifications.* Fuel specifications for emission testing and for service accumulation are specified in § 86.1213. Analytical gases are specified in § 86.1214. Both vehicle preconditioning for the diurnal loss test and vehicle operation prior to the hot soak loss test include operation on a chassis dynamometer. The driving cycle (EPA heavy-duty vehicle urban dynamometer driving schedule) is specified in § 86.1215.

[54 FR 14562, Apr. 11, 1989]

§ 86.1206–96 Equipment required; overview.

This subpart specifies procedures for testing of gasoline-fueled, natural gas-fueled, liquefied petroleum gas-fueled and methanol-fueled heavy-duty vehicles. Equipment required and specifications are as follows:

(a) *Evaporative emission tests.* Section 86.1207 specifies the necessary equipment.

(b) *Fuel, analytical gas, and driving schedule specifications.* Fuel specifications for emission testing and for service accumulation are specified in § 86.1213. Analytical gases are specified in § 86.1214. Evaporative testing requires vehicle operation on a chassis dynamometer. The driving cycle is specified in § 86.1215.

[58 FR 16047, Mar. 24, 1993, as amended at 59 FR 48521, Sept. 21, 1994; 65 FR 59957, Oct. 6, 2000]

§ 86.1207–90 Sampling and analytical system; evaporative emissions.

The following is a description of the components which will be used in evaporative emissions sampling systems for testing under this subpart.

(a) *Evaporative emission measurement enclosure.* The enclosure shall be readily sealable, rectangular in shape, with space for personnel access to all sides of the vehicle. When sealed, the enclosure shall be gas tight in accordance with § 86.1217. Interior surfaces must be impermeable and non-reactive to hydrocarbons and to methanol (if used for methanol-fueled vehicles). One surface should be of flexible, impermeable and non-reactive material to allow for minor volume changes, resulting from temperature changes. Wall design should promote maximum dissipation of heat, and if artificial cooling is used, interior surface temperatures shall not be less than 68 °F (20 °C).

(b) *Evaporative emission hydrocarbon and methanol analyzers.* (1) For gasoline and methanol-fueled vehicles a hydrocarbon analyzer utilizing the hydrogen flame ionization principle (FID) shall be used to monitor the atmosphere within the enclosure (a heated FID (HFID)(235°±15 °F (113±8 °C)) is recommended for methanol-fueled vehicles). Instrument bypass flow may be returned to the enclosure. The FID shall have a response time to 90 percent of final reading of less than 1.5 seconds, and be capable of meeting performance requirements expressed as a function of Cstd: where Cstd is the specific enclosure hydrocarbon level, in ppm, corresponding to the evaporative emission standard:

(i) Stability of the analyzer shall be better than 0.01 Cstd ppm at zero and span over a 15-minute period on all ranges used.

(ii) Repeatability of the analyzer, expressed as one standard deviation, shall be better than 0.005 Cstd ppm on all ranges used.

(2) For methanol-fueled vehicles, a methanol sampling and analyzing system is required in addition to the FID analyzer. The methanol sampling equipment shall consist of impingers for collecting the methanol sample and appropriate equipment for drawing the sample through the impingers. The analytical equipment shall consist of a gas chromatograph equipped with a flame ionization detector. (Note: For 1990 through 1994 model year methanol-fueled vehicles, a HFID, calibrated on methanol may be used in place of the HFID calibrated on propane plus the methanol impingers and associated analytical equipment.)

(3) The methanol sampling system described in paragraph (b)(2) of this section shall be designed such that, if a test vehicle emitted the maximum allowable level of methanol (based on all applicable standards) during any phase of the test, the measured concentration in the primary impinger would exceed either 25 mg/l or a concentration equal to 25 times the limit of detection for the GC analyzer, and such that the primary impinger collects at least 90 percent of the analyte in the samples. The remaining analyte shall be collected by the secondary impinger. The provisions of this paragraph apply to the design of sampling systems, not to individual tests.

(c) *Evaporative emission hydrocarbon and methanol data recording system.* (1) The electrical output of the FID used for measuring hydrocarbons (or hydrocarbons plus methanol as appropriate) shall be recorded at least at the initiation and termination of each diurnal or hot soak. The recording may be by means of a strip chart potentiometric recorder, by use of an on-line computer system or other suitable means. In any case, the recording system must have operational characteristics (signal to noise ratio, speed of response, etc.) equivalent to or better than those of the signal source being recorded, and must provide a permanent record of results. The record shall show a positive indication of the initiation and completion of each diurnal or hot soak along with the time elapsed between initiation and completion of each soak.

(2) For the methanol sample, permanent records shall be made of the following: the volumes of deionized water introduced into each impinger, the rate and time of sample collection and the chromatogram of the analyzed sample.

(d) *Tank fuel heating system.* The tank fuel heating system shall consist of a heat source and a temperature controller. A typical heat source is a 2,000 W heating pad. Other sources may be used as required by circumstances. The temperature controller may be manual, such as a variable voltage transformer, or may be automated. The heating system must not cause hot spots on the tank wetted surface which could cause local overheating of the fuel. Heat must not be applied to the vapor in the tank above the liquid fuel. The temperature controller must be capable of controlling the fuel tank temperature during the diurnal soak to within ±3 °F (±1.7 °C) of the following equation:

(1) $F = T_o + (0.4)t$

(2) *For SI units,* $C = T_o - (2/9)t$

Where:

F = Temperature in °F.

C = Temperature in °C.

t = Time since start of test in minutes.

T_o = Initial temperature in °F (or in °C for SI units).

(e) *Temperature recording system.* Strip chart recorder(s) or an automatic data processor shall be used to record enclosure ambient and vehicle fuel tank temperature at least once every minute. The temperature recorder or data processor shall have a time accuracy of ±15s, a time precision of ±15s and be capable of resolving temperature to ±0.75 °F (±0.42 °C). The temperature recording system (recorder and sensor) shall have an accuracy of ±3 °F (±1.7 °C). Two ambient temperature sensors, connected to provide one average output, shall be located in the enclosure. These sensors shall be located at the approximate vertical centerline of each side wall extending 4 inches (nominally) into the enclosure at a height of 3±0.5 ft (0.9±0.2 m). The vehicle fuel tank temperature sensor shall be located in the fuel tank so as to measure the temperature of the prescribed test fuel at the approximate mid-volume of the fuel. Manufacturers shall arrange that vehicles furnished

for testing at Federal certification facilities be equipped with iron-constantan Type J thermocouples for measurement of fuel tank temperature.

(f) *Purge blower*. One or more portable or fixed blowers shall be used to purge the enclosure. The blowers shall have sufficient flow capacity to reduce the enclosure hydrocarbon and/or methanol concentration from the test level to the ambient level between tests. Actual flow capacity will depend upon the time available between tests.

(g) *Mixing blower*. One or more blowers or fans with a total capacity of 250 to 750 cfm per 1,000 ft^3 of enclosure volume shall be used to mix the contents of the enclosure during evaporative emission testing. The mixing blower(s) shall be arranged such that a uniform concentration is maintained. No portion of the air stream shall be directed towards the vehicle.

[54 FR 14562, Apr. 11, 1989, as amended at 60 FR 34358, June 30, 1995]

§ 86.1207–96 Sampling and analytical systems; evaporative emissions.

(a) *Testing enclosures*—(1) *Diurnal emission test*. The enclosure shall be readily sealable, rectangular in shape, with space for personnel access to all sides of the vehicle. When sealed, the enclosure shall be gas tight in accordance with § 86.1217–96. Interior surfaces must be impermeable and nonreactive to hydrocarbons (and to methanol, if the enclosure is used for methanol-fueled vehicles). The temperature conditioning system shall be capable of controlling the internal enclosure air temperature to follow the prescribed temperature versus time cycle as specified in § 86.1233–96 and appendix II of this part, within an instantaneous tolerance of ±3.0 °F of the nominal temperature versus time profile throughout the test, and an average tolerance of 2.0 °F over the duration of the test (where the average is calculated using the absolute value of each measured deviation). The control system shall be tuned to provide a smooth temperature pattern that has a minimum of overshoot, hunting, and instability about the desired long-term ambient temperature profile. Interior surface temperatures shall not be less than 40 °F at any time during the diurnal emission test. To accommodate the volume changes due to enclosure temperature changes, either a variable-volume or fixed-volume enclosure may be used for diurnal emission testing:

(i) *Variable-volume enclosure*. The variable-volume enclosure expands and contracts in response to the temperature change of the air mass in the enclosure. Two potential means of accommodating the internal volume changes are moveable panel(s), or a bellows design, in which impermeable bag(s) inside the enclosure expand and contract in response to internal pressure changes by exchanging air from outside the enclosure. Any design for volume accommodation must maintain the integrity of the enclosure as specified in § 86.1217–96 over the specified temperature range. Any method of volume accommodation shall limit the differential between the enclosure internal pressure and the barometric pressure to a maximum value of ±2.0 inches of water. The enclosure shall be capable of latching to a fixed volume. A variable-volume enclosure must be capable of accommodating a ±7 percent change from its ''nominal volume'' (see § 86.1217–96(b)), accounting for temperature and barometric pressure variation during testing.

(ii) *Fixed-volume enclosure*. The fixed-volume enclosure shall be constructed with rigid panels that maintain a fixed enclosure volume, and meet the following requirements.

(A) The enclosure shall be equipped with a mechanism to maintain a fixed internal air volume. This may be accomplished either by withdrawing air at a constant rate and providing make-up air as needed, or by reversing the flow of air into and out of the enclosure in response to rising or falling temperatures. If inlet air is added continuously throughout the test, it should be filtered with activated carbon to provide a relatively low and constant hydrocarbon level. Any method of volume accommodation shall maintain the differential between the enclosure internal pressure and the barometric pressure to a maximum value of ±2.0 inches of water.

(B) The equipment shall be capable of measuring the mass of hydrocarbon and methanol (if the enclosure is used

for methanol-fueled vehicles) in the inlet and outlet flow streams with a resolution of 0.01 gram per hour. A bag sampling system may be used to collect a proportional sample of the air withdrawn from and admitted to the enclosure. Alternatively, the inlet and outlet flow streams may be continuously analyzed using an on-line FID analyzer and integrated with the flow measurements to provide a continuous record of the mass hydrocarbon and methanol removal.

(2) *Running loss test.* The enclosure shall be readily sealable, rectangular in shape, with space for personnel access to all sides of the vehicle. When sealed, the enclosure shall be gas tight in accordance with § 86.1217–96. The enclosure may be equipped with a personnel door, provided that the enclosure can still meet the requirements of § 86.1217–96 with the door installed. Interior surfaces must be impermeable and nonreactive to hydrocarbons and to methanol (if the enclosure is used for methanol-fueled vehicles). Interior surface temperatures shall not be less than 40 °F. If a running loss enclosure meets all the requirements of paragraph (a)(1) of this section, it may be used as a diurnal evaporative emission enclosure. The enclosure must contain a dynamometer that meets the requirements of § 86.1208. Provisions shall be made to remove exhaust gases from the enclosure. During the running loss test, ambient temperatures must be maintained at 95±5 °F (95±2 °F on average). An air or oxygen cylinder with an attached self-contained breathing apparatus may be provided for the vehicle operator. The air required for vehicle operation shall be provided by one of the following methods:

(i) The running loss enclosure may be equipped to supply air to the vehicle, at a temperature of 95±5 °F, from sources outside of the running loss enclosure directly into the operating engine's air intake system. Supplemental air requirements (e.g., for an air pump) shall be supplied by drawing air from the engine intake source.

(ii) If it is shown to yield equivalent or superior results, the running loss enclosure may be designed with an air makeup system that brings outside air into the enclosure to accommodate the aspiration needs of the engine and any auxiliary devices. The makeup air shall be monitored to establish the background hydrocarbon levels (or hydrocarbon and methanol, levels, if applicable) of the makeup air. A filter may be used to provide dry air with a stable concentration of background hydrocarbon. The makeup-air vent shall be readily sealable for calibration of the enclosure and other purposes. For calculation of running loss emissions, it may be assumed that the hydrocarbon and methanol concentration in the air consumed by the vehicle is the same as that of the rest of the air in the enclosure.

(3) *Hot soak test.* The hot soak test may be conducted by holding the vehicle in an enclosure that meets the requirements for either diurnal emission or running loss tests. The enclosure shall be configured to provide an internal enclosure ambient temperature of 95±10 °F for the first 5 minutes, and 95±5 °F (95±2 °F on average) for the remainder of the hot soak test.

(i) If the hot soak test is conducted in the same enclosure as the immediately preceding running loss test, interior surface temperatures shall not be below 70 °F for the last 55 minutes of the hot soak test.

(ii) If the hot soak test is not conducted in the same enclosure as the immediately preceding running loss test, interior surface temperatures shall not be below 70 °F for the duration of the hot soak test.

(b) *Evaporative emission hydrocarbon and methanol analyzers.* (1) For gasoline-, liquefied petroleum gas-, natural gas- and methanol-fueled vehicles a hydrocarbon analyzer utilizing the hydrogen flame ionization principle (FID) shall be used to monitor the atmosphere within the enclosure (a heated FID (HFID)(235°±15 °F (113±8 °C)) is recommended for methanol-fueled vehicles). Provided evaporative emission results are not affected, a probe may be used to detect or verify hydrocarbon sources during a running loss test. Instrument bypass flow may be returned to the enclosure. The FID shall have a response time to 90 percent of final reading of less than 1.5 seconds.

(2) For methanol-fueled vehicles, a methanol sampling and analyzing system is required in addition to the FID analyzer. The methanol sampling equipment shall consist of impingers for collecting the methanol sample and appropriate equipment for drawing the sample through the impingers. The analytical equipment shall consist of a gas chromatograph equipped with a flame ionization detector.

(3) The methanol sampling system described in paragraph (b)(2) of this section shall be designed such that, if a test vehicle emitted the maximum allowable level of methanol (based on all applicable standards) during any phase of the test, the measured concentration in the primary impinger would exceed either 25 mg/l or a concentration equal to 25 times the limit of detection for the GC analyzer, and such that the primary impinger collects at least 90 percent of the analyte in the samples. The remaining analyte shall be collected by the secondary impinger. The provisions of this paragraph apply to the design of sampling systems, not to individual tests.

(c) *Evaporative emission hydrocarbon and methanol data recording system.* (1) The electrical output of the FID used for measuring hydrocarbons (or hydrocarbons plus methanol, as appropriate) shall be recorded at least at the initiation and termination of each running loss and hot soak test, and at least at the initiation and termination of the enclosure sampling period(s) for the diurnal emission test, as described in § 86.1233. The recording may be taken by means of a strip chart potentiometric recorder, by use of an on-line computer system or other suitable means. In any case, the recording system must have operational characteristics (signal-to-noise ratio, speed of response, etc.) equivalent to or better than those of the signal source being recorded, and must provide a permanent record of results. The record shall show a positive indication of the initiation and completion of each hot soak, running loss, or diurnal emission test (including initiation and completion of sampling period(s)), along with the time elapsed during each soak.

(2) For the methanol sample, permanent records shall be made of the following: the volumes of deionized water introduced into each impinger, the rate and time of sample collection and the chromatogram of the analyzed sample.

(d) *Fuel temperature control system.* Fuel temperatures of the test vehicle shall be controlled, as specified in § 86.1234(g)(1)(xv), with the following combination of fans. The control system shall be tuned and operated to provide a smooth and continuous fuel temperature profile that is representative of the on-road temperature profile. The running loss test configuration should be designed to avoid heating or cooling the fuel tank's vapor space in a way that would cause vapor temperature behavior to be unrepresentative of the vehicle's on-road profile.

(1) A vehicle cooling fan shall discharge air to the front of the vehicle. The fan shall be a road-speed modulated fan that is controlled to a discharge velocity that follows the dynamometer roll speed, at least up to speeds of 30 mph, throughout the driving cycle. If a warning light or gauge indicates that the vehicle's engine coolant has overheated, subsequent test runs on the that vehicle must include a vehicle cooling fan that follows the dynamometer roll speed at all speeds throughout the test cycle. The fan may direct airflow to both the vehicle radiator air inlet(s) and the vehicle underbody.

(2) An additional fan may be used to discharge airflow from the front of the vehicle directly to the vehicle underbody to control fuel temperatures. Such a fan shall provide a total discharge airflow not to exceed 8,000 cfm.

(3) Additional fans may be used to route heating or cooling air directly at the bottom of the vehicle's fuel tank. The air supplied to the tank shall be between 85° and 160 °F, with a total discharge airflow not to exceed 4,000 cfm. For exceptional circumstances, manufacturers may direct up to 6,000 cfm at the bottom of the fuel tank with the advance approval of the Administrator.

(4) Direct fuel heating may be needed for canister preconditioning, as specified in § 86.1232(j)(2). Also, under exceptional circumstances in which airflow alone is insufficient to control fuel temperatures during the running loss

test, direct fuel tank heating may be used (see § 86.1234–96(g)(1)(xv)). The heating system must not cause hot spots on the tank wetted surface that could cause local overheating of the fuel. Heat must not be applied directly to the tank's vapor space, nor to the liquid-vapor interface.

(e) *Temperature recording system.* A strip chart potentiometric recorder, an on-line computer system, or other suitable means shall be used to record enclosure ambient temperature during all evaporative emission test segments, as well as vehicle fuel tank temperature during the running loss test. The recording system shall record each temperature at least once every minute. The recording system shall be capable of resolving time to ±15 s and capable of resolving temperature to ±0.75 °F (±0.42 °C). The temperature recording system (recorder and sensor) shall have an accuracy of ±3 °F (±1.7 °C). The recorder (data processor) shall have a time accuracy of ±15 s and a precision of ±15 s. Enclosures shall be equipped with two ambient temperature sensors, connected to provide one average output, located 3 feet above the floor at the approximate mid-length of each side wall of the enclosure and within 3 to 12 inches of each side wall. For diurnal emission testing, an additional temperature sensor shall be located underneath the vehicle to provide a temperature measurement representative of the air temperature under the fuel tank. For running loss testing, an ambient temperature sensor shall be located at the inlet to the fan that provides engine cooling. Manufacturers shall arrange that vehicles furnished for testing at federal certification facilities be equipped with temperature sensors for measurement of fuel tank temperatures. Vehicles shall be equipped with two temperature sensors installed to provide an average liquid fuel temperature. The temperature sensors shall be placed to measure the temperature at the mid-volume of the liquid fuel at a fill level of 40 percent of nominal tank capacity. An additional temperature sensor may be placed to measure vapor temperatures approximately at the mid-volume of the vapor space, though measurement of vapor temperatures is optional during the running loss test. In-tank temperature sensors are not required for the supplemental two-diurnal test sequence specified in § 86.1230–96.

(f) *Pressure recording system.* A strip chart potentiometric recorder, an on-line computer system, or other suitable means, shall be used to record the enclosure gage pressure for any testing in an enclosure, as well as the vehicle's fuel tank pressure during the running loss test and the outdoor driving procedure specified in § 86.1229–85(d). Fuel tank pressure measurement and recording equipment are optional during the running loss test. The recording system shall record each pressure at least once every minute. The recording system shall be capable of resolving time to ±15 s and capable of resolving pressure to ±0.1 inches of water. The pressure recording system (recorder and sensor) shall have an accuracy of ±1.0 inch of water. The recorder (data processor) shall have a time accuracy of ±15 s and a precision of ±15 s. The pressure transducer shall be installed to measure the pressure in the vapor space of the fuel tank.

(g) *Purge blower.* One or more portable or fixed blowers shall be used to purge the enclosure. The blowers shall have sufficient flow capacity to reduce the enclosure hydrocarbon and/or methanol concentration from the test level to the ambient level between tests. Actual flow capacity will depend upon the time available between tests.

(h) *Mixing blower.* Blowers or fans shall be used to mix the enclosure contents during evaporative emission testing. The inlets and outlets of the air circulation blower(s) shall be configured to provide a well dispersed air circulation pattern that produces effective internal mixing and avoids significant temperature or hydrocarbon stratification. Maintenance of uniform concentrations throughout the enclosure is important to the accuracy of testing.

(1) *Diurnal emission test.* Blowers or fans shall have a capacity of 0.8±0.2 cfm per cubic foot of the nominal enclosure volume for mixing in the enclosure. Additional fans may be used to maintain a minimum wind speed of 5 mph (8 km/h) under the fuel tank of the test vehicle.

(2) *Running loss test*. Blowers or fans shall have a total capacity of at least 1.0 cfm per cubic foot of the nominal enclosure volume.

(3) *Hot soak test*. Blowers or fans must have a capacity of 0.8±0.2 cfm per cubic foot of the nominal enclosure volume. Circulated air shall not be aimed directly at the vehicle.

(i) *Point-source running loss measurement facility*. Some system requirements pertain specifically to running loss testing by the point-source method, in which emissions from potential sources are collected and routed to a sampling system. Emissions are sampled with the same equipment and techniques as for exhaust emission measurement. The test environment must contain a dynamometer that meets the requirements of § 86.108. During the running loss test, ambient temperatures must be maintained at 95±5 °F (95±2 °F on average). An air or oxygen cylinder with an attached self-contained breathing apparatus may be provided for the vehicle operator.

(1) The running loss vapor vent collection system shall be configured to collect all running loss emissions from each of the discrete point sources that function as vehicle fuel system vapor vents, and transport the collected vapor emissions to a CFV- or PDP-based dilution and measurement system. The collection system shall consist of a collector at each vehicle vapor vent, lengths of heated sample line connecting each collector to the inlet of the heated sample pump, and lengths of heated sample line connecting the outlet of the heated sample pump to the inlet of the running loss fuel vapor sampling system. Up to 3 feet of unheated line connecting each of the vapor collectors to the heated sample lines shall be allowed. Each heated sample pump and its associated sample lines shall be maintained at a temperature between 175 °F and 200 °F to prevent condensation of fuel vapor in the sample lines. The heated sample pump(s) and its associated flow controls shall be configured and operated to draw a flow of ambient air into each collector at a flow rate of at least 0.67 cfm. The flow controls on each heated sampling system shall include an indicating flow meter that provides an alarm output to the data recording system if the flow rate drops below 0.67 cfm by more than 5 percent. The collector inlet for each discrete vapor vent shall be placed in proximity to the vent as necessary to capture any fuel vapor emissions without significantly affecting flow or pressure of the normal action of the vent. The collector inlets shall be designed to interface with the configuration and orientation of each specific vapor vent. For vapor vents that terminate in a tube or hose barb, a short length of tubing of an inside diameter larger throughout its length than the inside diameter of the vent outlet may be used to extend the vent into the mouth of the collector. For those vapor vent designs that are not compatible with such collector configurations, the vehicle manufacturer shall supply a collector that is configured to interface with the vapor vent design and that terminates in a fitting that is capable of capturing all vapor emitted from the vent. The Administrator may test for running losses by the point-source method without heating sample lines or pumps.

(2) The running loss fuel vapor sampling system shall be a CFV- or PDP-based dilution and measurement system that further dilutes the running loss fuel vapors collected by the vapor vent collection system(s) with ambient air, collects continuously proportional samples of the diluted running loss vapors and dilution air in sample bags, and measures the total dilute flow through the sampling system over each test interval. In practice, the system shall be configured and operated in a manner that is directly analogous to an exhaust emissions constant volume sampling system, except that the input flow to the system is the flow from the running loss vapor vent collection system(s) instead of vehicle exhaust flow. The system shall be configured and operated to meet the following requirements:

(i) The running loss fuel vapor sampling system shall be designed to measure the true mass of fuel vapor emissions collected by the running loss vapor vent collection system from the specified fuel vapor vents. The total volume of the mixture of running loss emissions and dilution air shall be

measured and a continuously proportioned sample of volume shall be collected for analysis. Mass emissions shall be determined from the sample concentration and total flow over the test period.

(ii) The PDP-CVS shall consist of a dilution air filter and mixing assembly, heat exchanger, positive-displacement pump, sampling system, and associated valves, pressure and temperature sensors. The PDP-CVS shall conform to the following requirements:

(A) The gas mixture temperature, measured at a point immediately ahead of the positive-displacement pump, shall be within ±10 °F of the designed operating temperature at the start of the test. The gas mixture temperature variation from its value at the start of the test shall be limited to ±10 °F during the entire test. The temperature measuring system shall have an accuracy and precision of ±2 °F.

(B) The pressure gauges shall have an accuracy and precision of ±1.6 inches of water (±0.4 kPa).

(C) The flow capacity of the CVS shall not exceed 350 cfm.

(D) Sample collection bags for dilution air and running loss fuel vapor samples shall be sufficient size so as not to impede sample flow.

(iii) The CFV sample system shall consist of a dilution air filter and mixing assembly, a sampling venturi, a critical flow venturi, a sampling system and assorted valves, and pressure and temperature sensors. The CFV sample system shall conform to the following requirements:

(A) The temperature measuring system shall have an accuracy and precision of ±2 °F and a response time of 0.100 seconds of 62.5 percent of a temperature change (as measured in hot silicone oil).

(B) The pressure measuring system shall have an accuracy and precision of ±1.6 inches of water (0.4 kPa).

(C) The flow capacity of the CVS shall not exceed 350 cfm.

(D) Sample collection bags for dilution air and running loss fuel vapor samples shall be of sufficient size so as not to impede sample flow.

(3) An on-line computer system or strip-chart recorder shall be used to record the following additional parameters during the running loss test sequence:

(i) CFV (if used) inlet temperature and pressure.

(ii) PDP (if used) inlet temperature, pressure, and differential pressure.

[58 FR 16047, Mar. 24, 1993, as amended at 59 FR 48521, Sept. 21, 1994; 60 FR 34358, June 30, 1995; 60 FR 43898, Aug. 23, 1995]

§ 86.1213–04 Fuel specifications.

The test fuels listed in § 86.1313–04 shall be used for evaporative emission testing.

[66 FR 5168, Jan. 18, 2001]

§ 86.1213–08 Fuel specifications.

The test fuels listed in 40 CFR part 1065, subpart H, shall be used for evaporative emission testing.

[70 FR 40437, July 13, 2005]

§ 86.1213–90 Fuel specifications.

(a) Gasoline having the following specifications will be used in emissions testing for gasoline-fueled vehicles.

Item	ASTM	Value
Octane, research, min	D2699	93
Sensitivity, min	.....	7.5
Lead (organic), g/U.S. gal	D3237	0.050[1]
(g/liter)	.....	(0.013)[1]
Distillation range:		
IBP, °F	D86	75–95
(°C)	.....	(23.9–35)
10 pct. point, °F	D86	120–135
(°C)	.....	(48.9–57.2)
50 pct. point, °F	D86	200–230
(°C)	.....	(93.3–110)
90 pct. point, °F	D86	300–325
(°C)	.....	(148.9–162.8)
EP, max. °F	D86	415
(°C)	.....	(212.8)
Sulphur, max. wt. pct	D1266	0.10
Phosphorous, max. g/U.S. gal	D3231	0.005
(g/liter)	.....	(0.0013)
RVP, psi	D323	8.7–9.2
(kPa)	.....	(60.0–63.4)
Hydrocarbon composition:		
Olefins, max. pct	D1319	10
Aromatics, max. pct	D1319	35
Saturates	D1319	[2]

[1] Maximum.
[2] Remainder.

(b)(1) Unleaded gasoline representative of commercial gasoline which will be generally available through retail outlets shall be used in service accumulation.

(2) The octane rating of the gasoline used shall be no higher than 1.0 Research octane number above the minimum recommended by the manufacturer and have a minimum sensitivity of 7.5 octane numbers, where sensitivity is defined as the Research octane number minus the Motor octane number.

(3) The Reid Vapor Pressure of the gasoline used shall be characteristic of the motor fuel used during the season in which the service accumulation takes place.

(c) Methanol fuel used in evaporative emission testing and in service accumulation of methanol-fueled vehicles shall be representative of commercially available methanol fuel and shall consist of at least 50 percent methanol (CH_3OH) by volume.

(1) Manufacturers shall recommend the methanol fuel to be used for testing and service accumulation in accordance with paragraph (c) of this section.

(2) The Administrator shall determine the methanol fuel to be used for testing and service accumulation.

(d) Other methanol fuels may be used for testing and service accumulation provided:

(1) They are commercially available, and

(2) Information, acceptable to the Administrator, is provided to show that only the designated fuel would be used in customer service, and

(3) Use of a fuel listed under paragraph (c)(2) of this section would have a detrimental effect on emissions or durability, and

(4) Written approval from the Administrator of the fuel specifications must be provided prior to the start of testing.

(e) The specification range of the fuels to be used under paragraphs (b), (c), and (d) of this section shall be reported in accordance with § 86.090–21(b)(3).

(f) *Mixtures of petroleum and methanol fuels for flexible fuel vehicles.* (1) Mixtures of petroleum and methanol fuels used for exhaust and evaporative emission testing and service accumulation for flexible fuel vehicles shall be within the range of fuel mixtures for which the vehicle was designed.

(2) Manufacturer testing and service accumulation may be performed using only those mixtures (mixtures may be different for exhaust testing, evaporative testing, and service accumulation) expected to result in the highest emissions, provided:

(i) The fuels which constitute the mixture will be used in customer service, and

(ii) Information, acceptable to the Administrator, is provided by the manufacturer to show that the designated fuel mixtures would result in the highest emissions, and

(iii) Written approval from the Administrator of the fuel specifications must be provided prior to the start of testing.

(3) The specification range of the fuels to be used under paragraph (f)(2) of this section shall be reported in accordance with § 86.090–21(b)(3).

[53 FR 476, Jan. 7, 1988, as amended at 54 FR 14563, Apr. 11, 1989]

§ 86.1213–94 Fuel specifications.

(a) *Gasoline fuel.* (1) Gasoline having the following specifications will be used in emissions testing for gasoline-fueled vehicles.

Item	ASTM	Value
Octane, research, min.	D2699	93
Sensitivity, min.	.....	7.5
Lead (organic) g/U.S. gal	D3237	[1] 0.050
(g/liter)	.....	[1] (0.013)
Distillation range:		
IBP °F	D86	75–95
(°C)	.....	(23.9–35)
10 pct. point °F	D86	120–135
(°C)	.....	(48.9–57.2)
50 pct. point °F	D86	200–230
(°C)	.....	(93.3–110)
90 pct. point °F	D86	300–325
(°C)	.....	(148.9–162.8)
EP, max. °F	D86	415
(°C)	.....	(212.8)
Sulphur, max. wt. pct.	D1266	0.10
Phosphorous, max. g/U.S. gal.	D3231	0.005
(g/liter)	.....	(0.0013)
RVP, psi.	D323	8.7–9.2
(kPa)	.....	(60.0–63.4)
Hydrocarbon composition:		
Olefins, max. pct.	D1319	10
Aromatics, max. pct.	D1319	35
Saturates	D1319	([2])

[1] Maximum.
[2] Remainder.

(2)(i) Unleaded gasoline representative of commercial gasoline which will be generally available through retail outlets shall be used in service accumulation.

(ii) The octane rating of the gasoline used shall be no higher than 1.0 Research octane number above the minimum recommended by the manufacturer and have a minimum sensitivity of 7.5 octane numbers, where sensitivity is defined as the Research octane number minus the Motor octane number.

(iii) The Reid Vapor Pressure of the gasoline used shall be characteristic of the motor fuel used during the season in which the service accumulation takes place.

(3) The specification range of the gasoline to be used under paragraphs (a)(1) and (a)(2) of this section shall be reported in accordance with § 86.094–21(b)(3).

(b) *Methanol fuel.* (1) Methanol fuel used in evaporative emission testing and in service accumulation of methanol-fueled vehicles shall be representative of commercially available methanol fuel and shall consist of at least 50 percent methanol (CH_3OH) by volume.

(i) Manufacturers shall recommend the methanol fuel to be used for testing and service accumulation.

(ii) The Administrator shall determine the methanol fuel to be used for testing and service accumulation.

(2) Other methanol fuels may be used for testing and service accumulation provided:

(i) They are commercially available;

(ii) Information, acceptable to the Administrator, is provided to show that only the designated fuel would be used in customer service; and

(iii) Use of a fuel listed under paragraph (b)(1) of this section would have a detrimental effect on emissions or durability; and

(iv) Written approval from the Administrator of the fuel specifications must be provided prior to the start of testing.

(3) The specification range of the methanol fuels to be used under paragraphs (b)(1) and (b)(2) of this section shall be reported in accordance with § 86.094–21(b)(3).

(c) *Mixtures of petroleum and methanol fuels for flexible fuel vehicles.* (1) Mixtures of petroleum and methanol fuels used for exhaust and evaporative emission testing and service accumulation for flexible fuel vehicles shall consist of the gasoline listed in paragraph (a) of this section and the methanol fuel listed in paragraph (b) of this section, and shall be within the range fuel mixtures for which the vehicle was designed as reported in accordance with § 86.94–21. The Administrator may use any fuel within this range for testing.

(2) The fuel mixtures used by the manufacturers shall be sufficient to demonstrate compliance over the full design range, and shall include:

(i) For emission testing:

(A) The petroleum fuel specified in paragraph (a) of this section;

(B) A methanol fuel representative of the methanol fuel expected to be found in use, as specified in paragraph (d) of this section; and

(C) A combination of the fuels specified in paragraphs (c)(2)(i)(A) and (B) of this section that represents the composition which results in the highest Reid Vapor Pressure for the mixture. The mixture shall contain between nine and thirteen percent methanol.

(ii) For service accumulation, an alternating combination of the fuels specified in paragraphs (a) and (b) of this section that, based on good engineering judgement, demonstrates the durability of the emission control system. The fuels may be used as a single mixture or alternated.

(iii) Or, other combinations for testing or service accumulation which demonstrate compliance with the standards over the entire design range of the vehicle, provided that written approval is obtained from the Administrator prior to the start of testing.

(3) The specification range of the fuels to be used under paragraph (c) of this section shall be reported in accordance with § 86.094–21.

(d) *Natural gas fuel.* (1) Natural gas fuel having the following specifications will be used in evaporative emission testing and in service accumulation of natural gas-fueled vehicles shall be commercially available natural gas fuel.

NATURAL GAS CERTIFICATION FUEL SPECIFICATIONS

Item		ASTM	Value
Methane	min. mole pct	D1945	89.0
Ethane	max. mole pct	D1945	4.5
C_3 and higher	max. mole pct	D1945	2.3

NATURAL GAS CERTIFICATION FUEL SPECIFICATIONS—Continued

Item		ASTM	Value
C_6 and higher	max. mole pct	D1945	0.2
Oxygen	max. mole pct	D1945	0.6
Inert gases:			
Sum of CO_2 and N_2	max. mole pct	D1945	4.0
Odorant [1]			

[1] The natural gas at ambient conditions must have a distinctive odor potent enough for its presence to be detected down to a concentration in air of not over 1/5 (one-fifth) of the lower limit of flammability.

(2) Natural gas fuel representative of commercial natural gas which will be generally available through retail outlets shall be used in service accumulation.

(3) Other natural gas fuels may be used for emission testing and service accumulation provided:

(i) They are commercially available;

(ii) Information, acceptable to the Administrator, is provided to show that only the designated fuel would be used in customer service; and

(iii) Written approval from the Administrator of the fuel specifications must be provided prior to the start of testing.

(4) The specification range of the fuels to be used under paragraphs (d)(1), (d)(2) and (d)(3) of this section shall be reported in accordance with § 86.094–21(b)(3).

(e) *Liquefied petroleum gas-fuel.* (1) Liquefied petroleum gas-fuel used in evaporative emission testing and in service accumulation of liquefied petroleum gas-fueled vehicles shall be commercially available liquefied petroleum gas-fuel.

(i) Manufacturers shall recommend the liquefied petroleum gas-fuel to be used for testing and service accumulation.

(ii) The Administrator shall determine the liquefied petroleum gas-fuel to be used for testing and service accumulation.

(2) Other liquefied petroleum gas fuels may be used for testing and service accumulation provided:

(i) They are commercially available;

(ii) Information, acceptable to the Administrator, is provided to show that only the designated fuel would be used in customer service; and

(iii) Written approval from the Administrator of the fuel specifications must be provided prior to the start of testing.

(3) The specification range of the fuels to be used under paragraphs (e)(1) and (e)(2) of this section shall be measured in accordance with ASTM D2163–91 and reported in accordance with § 86.094–21(b)(3).

[59 FR 48521, Sept. 21, 1994, as amended at 34359, June 30, 1995]

§ 86.1214–85 Analytical gases.

(a) *Analyzer gases.* (1) Gases for the hydrocarbon analyzer shall be:

(i) Single blends of propane using air as the diluent; and

(ii) Optionally, for response factor determination, single blends of methanol using air as the diluent.

(2) Fuel for the evaporative emission enclosure FID (or HFID for methanol-fueled vehicles) shall be a blend of 40 ±2 percent hydrogen with the balance being helium. The mixture shall contain less than 1 ppm equivalent carbon response. 98 to 100 percent hydrogen fuel may be used with advance approval by the Administrator.

(3) The allowable zero air impurity concentration shall not exceed 1 ppm equivalent carbon response.

(4) ''Zero grade air'' includes artificial ''air'' consisting of a blend of nitrogen and oxygen with oxygen concentrations between 18 and 21 mole percent.

(5) The use of proportioning and precision blending devices to obtain the required analyzer gas concentrations is allowable provided their use has been approved in advance by the Administrator.

(b) Calibration gases (not including methanol) shall be traceable to within one percent of NIST (formerly NBS) gas standards, or other gas standards which have been approved by the Administrator.

(c) Span gases (not including methanol) shall be accurate to within two percent of true concentration, where true concentration refers to NIST (formerly NBS) gas standards, or other gas standards which have been approved by the Administrator.

(d) Methanol in air gases used for response factor determination shall:

(1) Be traceable to within ±2 percent of NIST (formerly NBS) gas standards,

or other gas standards which have been approved by the Administrator; and

(2) Remain within ±2 percent of the labeled concentration. Demonstration of stability shall be based on a quarterly measurement procedure with a precision of ±2 percent (two standard deviations), or other method approved by the Administrator. The measurement procedure may incorporate multiple measurements. If the true concentration of the gas changes by more than two percent, but less than ten percent, the gas may be relabeled with the new concentration.

[48 FR 1456, Jan. 12, 1983, as amended at 60 FR 34359, June 30, 1995]

§ 86.1215–85 EPA heavy-duty vehicle (HDV) urban dynamometer driving schedule.

(a)(1) The EPA dynamometer driving schedule for heavy-duty vehicles is a 1060 second transient speed versus time cycle which is designed to simulate gasoline-fueled HDV operation in urban areas. A second by second listing of this schedule is given in appendix I(d) of this part. Thirty-three percent of the cycle is idle operation, and the average vehicle speed is 18.9 mph (30.4 km/hr). The Administrator will use this driving schedule when conducting evaporative emission tests, as described in § 86.1230–96.

(2) For evaporative emission testing of heavy-duty vehicles a manufacturer may optionally use the dynamometer driving schedule for light-duty vehicles and light-duty trucks specified in appendix I(a) of this part. This driving schedule may not be used for exhaust emissions testing of heavy-duty vehicles. If the manufacturer chooses to use this option, the Administrator will use this driving schedule when conducting evaporative emission tests, as described in § 86.1230–96.

(b) The driver should attempt to follow the target schedule as closely as possible. The speed tolerance at any given time for these schedules, or for a driver's aid chart approved by the Administrator, are as follows:

(1) The upper limit is 4 mph (6.4 km/h) higher than the highest point on the trace within 1 second of the given time.

(2) The lower limit is 4 mph (6.4 km/h) lower than the lowest point on the trace within 1 second of the given time.

(3)(i) Speed variations greater than the tolerances (such as may occur during gear changes or braking spikes) are acceptable, provided they occur for less than 2 seconds on any occasion and are clearly documented as to the time and speed at that point of the driving schedule.

(ii) When conducted to meet the requirements of § 86.1229, up to three additional occurrences of speed variations greater than the tolerance are acceptable, provided they occur for less than 15 seconds on any occasion, and are clearly documented as to the time and speed at that point of the driving schedule.

(4) Speeds lower than those prescribed are acceptable, provided the vehicle is operated at maximum available power during such occurrences.

[48 FR 1456, Jan. 12, 1983, as amended at 58 FR 16050, Mar. 24, 1993; 65 FR 59957, Oct. 6, 2000]

§ 86.1216–90 Calibrations; frequency and overview.

(a) Calibrations shall be performed as specified in § 86.1217 through § 86.1226.

(b) At least yearly or after any maintenance which could alter background emission levels, enclosure background emission measurements shall be performed.

(c) At least monthly or after any maintenance which could alter calibration, the following calibrations and checks shall be performed:

(1) Calibrate the hydrocarbon analyzer (see § 86.1221). Certain analyzers may require more frequent calibration depending on particular equipment and uses.

(2) Calibrate the dynamometer. If the dynamometer receives a weekly performance check (and remains within calibration) the monthly calibration need not be performed (see § 86.1218).

(3) Perform a hydrocarbon retention check and calibration on the evaporative emission enclosure (see § 86.1217).

(d) At least twice annually or after any maintenance perform a methanol retention check and calibration on the evaporative emission enclosure (see § 86.1217).

(e) Calibrate the methanol analyzer as often as required by the manufacturer or as necessary according to good practice.

[54 FR 14564, Apr. 11, 1989, as amended at 60 FR 34359, June 30, 1995]

§ 86.1217–90 Evaporative emission enclosure calibrations.

The calibration of the evaporative emission enclosure consists of three parts: Initial and periodic determination of enclosure background emissions (hydrocarbons and methanol); initial determination of enclosure internal volume; and periodic hydrocarbon and methanol retention check and calibration. Methanol measurements may be omitted when methanol-fueled vehicles will not be tested in the evaporative enclosure.

(a) *Initial and periodic determination of enclosure background emissions.* Prior to its introduction into service, annually thereafter, and after any repair which can affect the enclosure background emissions, the enclosure shall be checked to determine that it does not contain materials which will themselves emit hydrocarbons or methanol.[1] Proceed as follows:

(1) Zero and span (calibrate if required) the hydrocarbon analyzer.

(2) Purge the enclosure until a stable background hydrocarbon reading is obtained.

(3) Turn on the mixing blower (if not already on).

(4) Seal enclosure and measure background hydrocarbon concentration, background methanol, temperature, and barometric pressure. These are the initial readings C_{HCi}, C_{CH3OHi}, T_i, and P_{Bi}, for the enclosure background determination.

(5) Allow the enclosure to stand undisturbed without sampling for four hours.

(6) Measure the hydrocarbon and methanol concentration on the same FID. These are the final concentrations, C_{HCf} and C_{CH3OHf}. Also measure final temperature and barometric pressure.

(7) Calculate the mass change of methanol, hydrocarbons, and hydrocarbons plus methanol in the enclosure according to the equations in paragraph (d) of this section. The enclosure background emissions (hydrocarbons plus methanol) shall not be greater than 0.4g for the 4 hours.

(b) *Initial determination of enclosure internal volume.* Prior to its introduction into service the enclosure internal volume shall be determined by the following procedure.

(1) Carefully measure the internal length, width and height of the enclosure, accounting for irregularities (such as braces) and calculate the internal volume.

(2) Perform an enclosure calibration check according to paragraphs (c) (1) through (7) of this section.

(3) If the calculated mass does not agree within ±2 percent of the injected propane mass, then corrective action is required.

(c) *Hydrocarbon and methanol retention check and claibration.* The hydrocarbon and methanol retention check provides a check upon the calculated volume and also measures the leak rate. Prior to its introduction into service and at least monthly thereafter the enclosure leak rate shall be determined as follows:

(1) Zero and span (calibrate if required) the hydrocarbon analyzer.

(2) Purge the enclosure until a stable background hydrocarbon reading is obtained.

(3) Turn on the mixing blower (if not already on).

(4) Seal enclosure and measure background hydrocarbon concentration, background methanol, temperature, and barometric pressure. These are the initial readings C_{HCi}, C_{CH3OHi}, T_i and P_{Bi} for the enclosure calibration.

(5) Inject into the enclosure a known quantity of pure propane (4g is a convenient quantity) and a known quantity of pure methanol (4g is a convenient quantity) in gaseous form; i.e., at a temperature of at least 150–155 °F (65–68 °C). The propane and methanol may be measured by volume flow or by mass

[1] NOTE: When methanol as well as hydrocarbons are present in the evaporative enclosure, the HFID hydrocarbon concentration measurement includes the partial response of the HFID to methanol plus the hydrocarbons. Determination of the HFID response to methanol, § 86.1221, prior to its being placed in service is required for the determination of hydrocarbons.

measurement. The method used to measure the propane and methanol shall have an accuracy of ±0.5 percent of the measured value. (Less accurate methods may be used with the advanced approval of the Administrator.) The methanol and propane tests do not need to be conducted simultaneously.

(6) After a minimum of 5 minutes of mixing, analyze the enclosure atmosphere for hydrocarbon and methanol content, also record temperature and pressure. These measurements are the final readings for the enclosure calibration as well as the initial readings for the retention check.

(7) To verify the enclosure calibration, calculate the mass of propane and the mass of methanol using the measurements taken in steps (4) and (6). See paragraph (d) of this section. This quantity must be within ±2 percent of that measured in step 5 above. (For 1991–1995 calendar years, the difference may exceed ±2 percent for methanol, provided it does not exceed ±6 percent.)

(8) Allow the enclosure to remain sealed for a minimum of 4 hours, analyze the enclosure atmosphere for hydrocarbon and methanol content; record temperature and barometric pressure. These are the final readings for the hydrocarbon and methanol retention check.

(9) Calculate, using the equation in paragraph (d) of this section and the readings taken in step (8), the hydrocarbon and methanol mass. It may not differ by more than ±4 percent of the value in step (6). (For 1991–1995 calendar year methanol-fueled vehicles, the difference may exceed ±4 percent for methanol, provided it does not exceed ±6 percent.)

(d) *Calculations.* (1) The calculation of net methanol and hydrocarbon mass change is used to determine enclosure background and leak rate. It is also used to check the enclosure volume measurements. The methanol mass change is calculated from the initial and final methanol samples, temperature and pressure according to the following equation:

$$M_{CH3OH} = V \times \frac{T_{Ef}}{V_{Ef} \times T_{SHEDf}}\left[\left(C_{MS1f}AV_{1f}\right) + \left(C_{MS2f}AV_{2f}\right)\right] - \frac{T_{Ei}}{V_{Ei} \times T_{SHEDi}}\left[\left(C_{MS1i} \times AV_{1i}\right) + \left(C_{MS2i} \times AV_{2i}\right)\right]$$

Where:

(i) M_{CH3OH}=Methanol mass change, μg.

(ii) V=Enclosure volume, ft^3, as measured in paragraph (b)(1) of this section.

(iii) T_E=Temperature of sample withdrawn, °R.

(iv) V_E=Volume of sample withdrawn, ft^3.

(v) P_B=Barometric pressure at time of sampling, in. Hg.

(vi) C_{MS}=GC concentration of test sample.

(vii) AV=Volume of absorbing reagent in impinger.

(viii) i=Initial sample.

(ix) f=Final sample.

(x) 1=First impinger.

(xi) 2=Second impinger.

(2) The hydrocarbon mass change is calculated from the initial and final FID readings of hydrocarbon concentration, methanol concentration with FID response to methanol, temperature, and pressure according to the following equation:

$$M_{HC} = kV \times 10^{-4}\,\frac{\left(C_{HCf} - rC_{CH3OHf}\right)}{T_f} \times P_{Bf} - \frac{\left(C_{HCi} - rC_{CH3OHi}\right)}{T_i} \times P_{Bi}$$

Where:

(i) M_{HC}=Hydrocarbon mass change, g.

(ii) C_{HC}=FID hydrocarbon concentration as ppm carbon including FID response to methanol in the sample.

(iii) C_{CH_3OH}=Methanol concentration as ppm carbon.

$$= \frac{1.501 \times 10^{-3} \times T_e}{P_B \times V_E} \times \left[\left(C_{S1} \times AV_1 \right) + \left(C_{S2} \times AV_2 \right) \right]$$

(iv) V = Enclosure volume, ft^3 (m^3), as measured in paragraph (b)(1) of this section.

(v) r = FID response factor to methanol.

(vi) P_B = Barometric pressure, in. Hg (kPa).

(vii) T = Enclosure ambient temperature, °R(°K).

(viii) i = Indicates initial reading.

(ix) f = Indicates final reading.

(x) (A) k = 3.05

(B) *For SI units*, k = 17.60

NOTE: Hydrocarbon concentration is stated in ppm carbon, that is, ppm propane × 3. Expressions in parentheses are for SI units.

[54 FR 14564, Apr. 11, 1989, as amended at 60 FR 34359, June 30, 1995]

§86.1217–96 Evaporative emission enclosure calibrations.

The calibration of evaporative emission enclosures consists of three parts: initial and periodic determination of enclosure background emissions (hydrocarbons and methanol); initial determination of enclosure internal volume; and periodic hydrocarbon and methanol retention check and calibration. Methanol measurements may be omitted if methanol-fueled vehicles will not be tested in the evaporative enclosure. Alternate calibration methods may be used if shown to yield equivalent or superior results, and if approved in advance by the Administrator; specifically, more extreme temperatures may be used for determining calibration without affecting the validity of test results.

(a) *Initial and periodic determination of enclosure background emissions*. Prior to its introduction into service, annually thereafter, and after any repair that can affect the enclosure background emissions, the enclosure shall be checked to determine that it does not contain materials that will themselves emit hydrocarbons or methanol. When methanol as well as hydrocarbons are present in the evaporative enclosure, the HFID hydrocarbon concentration measurement includes the partial response of the HFID to methanol plus the hydrocarbons. Determination of the HFID response to methanol, §86.1221, prior to its being placed in service is required for the determination of hydrocarbons. Proceed as follows:

(1) Prepare the enclosure. (i) Variable-volume enclosures may be operated in either latched or unlatched volume configuration, as described in paragraph (b)(1) of this section. Ambient temperatures shall be maintained at 96±3 °F throughout the 4-hour period.

(ii) Fixed-volume enclosures may be operated with inlet and outlet flow streams either closed or open; if inlet and outlet flow streams are open, the air flowing into and out of the enclosure must be monitored in accordance with §86.107–96(a)(1)(ii)(B). Ambient temperatures shall be maintained at 96±3 °F throughout the 4-hour period.

(iii) For running loss enclosures ambient temperatures shall be maintained at 95±3 °F throughout the 4-hour period. For running loss enclosures designed with a vent for makeup air, the enclosure shall be operated with the vent closed.

(2) The enclosure may be sealed and the mixing fan operated for a period of up to 12 hours before the 4-hour background sampling period begins.

(3) Zero and span (calibrate if required) the hydrocarbon analyzer.

(4) Prior to the background determination, purge the enclosure until a stable background hydrocarbon reading is obtained.

(5) Turn on the mixing blower (if not already on).

(6) Seal enclosure and measure background hydrocarbon concentration,

background methanol, temperature, and barometric pressure. These are the initial readings C_{HCi}, C_{CH_3OHi}, and P_{Bi}, T_i for the enclosure background determination.

(7) Allow the enclosure to stand undisturbed for four hours.

(8) Measure the hydrocarbon concentration on the same FID and the methanol level. These are the final concentrations, C_{HCf} and C_{CH_3OHf}. Also measure final temperature and barometric pressure.

(9) Calculate the mass change of methanol, hydrocarbons, and hydrocarbons plus methanol in the enclosure according to the equations in paragraph (d) of this section.

(i) *Diurnal enclosures*. The enclosure background emissions (hydrocarbons plus methanol) shall not be greater than 0.05g for the 4 hours.

(ii) *Running loss enclosures*. The enclosure background emissions (hydrocarbons plus methanol) shall not be greater than 0.2 grams for the 4 hours.

(b) *Initial determination of enclosure internal volume*. Prior to its introduction into service the enclosure internal volume shall be determined by the following procedure:

(1) Carefully measure the internal length, width and height of the enclosure, accounting for irregularities (such as braces) and calculate the internal volume. For variable-volume enclosures, latch the enclosure to a fixed volume when the enclosure is held at a constant temperature; this nominal volume shall be repeatable within ±0.5 percent of the reported value.

(2)–(3) [Reserved]

(c) *Hydrocarbon and methanol (organic gas) retention check and calibration*. The hydrocarbon and methanol (if the enclosure is used for methanol-fueled vehicles) retention check provides a check upon the calculated volume and also measures the leak rate. The enclosure leak rate shall be determined prior to its introduction into service, following any modifications or repairs to the enclosure that may affect the integrity of the enclosure, and at least monthly thereafter. If six consecutive monthly retention checks are successfully completed without corrective action, the enclosure leak rate may be determined quarterly thereafter as long as no corrective action is required.

(1) An enclosure to be used for the diurnal emission test (see § 86.1233–96) shall be calibrated according to the following procedure. Calibration for hydrocarbon and methanol may be conducted simultaneously or in sequential test runs.

(i) Zero and span (calibrate if required) the hydrocarbon analyzer.

(ii) Purge the enclosure until a stable background hydrocarbon reading is obtained.

(iii) Turn on the mixing blowers (if not already on).

(iv) [Reserved]

(v) Turn on the ambient temperature control system (if not already on) and adjust it for an initial temperature of 96 °F (36 °C). On variable-volume enclosures, latch the enclosure to the appropriate volume position for the set temperature. On fixed-volume enclosures close the outlet and inlet flow streams.

(vi) When the enclosure stabilizes at 96±3 °F (36±2 °C), seal the enclosure and measure background hydrocarbon concentration, background methanol, temperature, and barometric pressure. These are the initial readings C_{HCi}, C_{CH_3OHi}, T_i, and P_{Bi} for the enclosure calibration.

(vii) Inject into the enclosure 2 to 6 grams of pure methanol at a temperature of at least 150 °F (65 °C) and/or 2 to 6 grams of pure propane. The injected quantity may be measured by volume flow or by mass measurement. The method used to measure the quantity of methanol and propane shall have an accuracy of ±0.2 percent of the measured value (less accurate methods may be used with the advance approval of the Administrator).

(viii) After a minimum of 5 minutes of mixing, analyze the enclosure atmosphere for hydrocarbon and methanol content, also record temperature and pressure. These measurements are the final readings for the enclosure calibration as well as the initial readings for the retention check.

(ix) To verify the enclosure calibration, calculate the mass of propane and the mass of methanol using the measurements taken in paragraphs (c)(1)(vi) and (viii) of this section. See paragraph (d) of this section. This quantity must

be within ±2 percent of that measured in paragraph (c)(1)(vii) of this section. (For calendar years through 1995, the difference may exceed ±2 percent for methanol, provided it does not exceed ±6 percent.)

(x) For variable-volume enclosures, unlatch the enclosure from the nominal volume configuration. For fixed-volume enclosures, open the outlet and inlet flow streams.

(xi) Start cycling the ambient temperature from 96 °F to 72 °F and back to 96 °F over a 24-hour period, according to the profile specified in § 86.1233–96 and appendix II of this part, within 15 minutes of sealing the enclosure.

(xii) At the completion of the 24-hour cycling period, analyze the enclosure atmosphere for hydrocarbon and methanol content; determine the net withdrawn methanol (in the case of diurnal emission testing with fixed-volume enclosures); record temperature and barometric pressure. These are the final readings for the hydrocarbon and methanol retention check. The final hydrocarbon and methanol mass, calculated in paragraph (d) of this section, shall be within 3 percent of that determined in paragraph (c)(1)(viii) of this section. (For calendar years through 1995, the difference may exceed ±3 percent for methanol, provided it does not exceed ±6 percent.)

(2) An enclosure to be used for the running loss test (see § 86.1234–96) shall meet the calibration and retention requirements of § 86.1217–90(c).

(3) Enclosures calibrated according to the procedures specified in either paragraph (c)(1) or (c)(2) of this section may be used for hot soak testing (see § 86.1238).

(4) The Administrator, upon request, may waive the requirement to comply with ±2 percent methanol recovery tolerance, and/or the ±3 percent retention tolerance and instead require compliance with higher tolerances (not to exceed ±6 percent for recoveries and ±8 for retention), provided that:

(i) The Administrator determines that compliance with these specified tolerances is not practically feasible; and

(ii) The manufacturer makes information available to the Administrator which indicates that the calibration tests and their results are consistent with good laboratory practice, and that the results are consistent with the results of calibration testing conducted by the Administrator.

(d) *Calculations.* (1) The calculation of net methanol and hydrocarbon mass change is used to determine enclosure background and leak rate. It is also used to check the enclosure volume measurements. The methanol mass change is calculated from the initial and final methanol samples, the net withdrawn methanol (in the case of diurnal emission testing with fixed-volume enclosures), and initial and final temperature and pressure according to the following equation:

$$M_{CH_3OH} = V_n \times \left[\frac{(C_{MS1f} \times AV_{1f}) + (C_{MS2f} \times AV_{2f})}{V_{E_f}}\right] - \left[\frac{(C_{MS1i} \times AV_{1i}) + (C_{MS2i} \times AV_{2i})}{V_{E_i}}\right] + (M_{CH_3OH,out} - M_{CH_3OH,in})$$

Where:

(i) M_{CH3OH}=Methanol mass change, μg.

(ii) V=Enclosure volume, ft³, as measured in paragraph (b)(1) of this section.

(iii) [Reserved]

(iv) [Reserved]

(v) V_E=Volume of sample withdrawn, ft³. Sample volumes must be corrected for differences in temperature to be consistent with determination of V_n, prior to being used in the equation.

(vi) P_B=Barometric pressure at time of sampling, in. Hg.

(vii) C_{MS}=GC concentration of test sample.

(viii) AV=Volume of absorbing reagent in impinger.

(ix) i=Initial sample.

(x) f=Final sample.

(xi) 1=First impinger.

(xii) 2=Second impinger.

(xiii) $M_{CH3OH,out}$=mass of methanol exiting the enclosure, in the case of

fixed-volume enclosures for diurnal emission testing, μg.

(xiv) $M_{CH3OH,in}$=mass of methanol entering the enclosure, in the case of fixed-volume enclosures for diurnal emission testing, μg.

(2) The hydrocarbon mass change is calculated from the initial and final FID readings of hydrocarbon concentration, methanol concentration with FID response to methanol, temperature, and pressure according to the following equation:

$$M_{HC} = kV \times 10^{-4} \frac{\left(C_{HCf} - rC_{CH3OHf}\right)}{T_f} \times P_{BF} - \frac{\left(C_{HCi} - rC_{CH3OHi}\right)}{T_i} \times PBi$$

Where:

(i) M_{HC}=Hydrocarbon mass change, g.

(ii) C_{HC}=FID hydrocarbon concentration as ppm carbon including FID response to methanol in the sample.

(iii) C_{CH3OH}=Methanol concentration as ppm carbon

$$= \frac{1.501 \times 10^{-3} \times T_e}{P_B \times V_E} \times \left[\left(C_{S1} \times AV_1\right) + \left(C_{S2} \times AV_2\right)\right]$$

(iv) V=Enclosure volume ft^3 (m^3), as measured in paragraph (b)(1) of this section.

(v) r=FID response factor to methanol.

(vi) P_B=Barometric pressure, in. Hg. (kPa).

(vii) T=Enclosure ambient temperature, R(K).

(viii) i=Indicates initial reading.

(ix) f=Indicates final reading.

(x)(A) k=3.05.

(B) For SI units, k=17.60.

(xi) $M_{HC,out}$=mass of hydrocarbon exiting the enclosure, in the case of fixed-volume enclosures for diurnal emission testing, g.

(xii) $M_{HC,in}$=mass of hydrocarbon entering the enclosure, in the case of fixed-volume enclosures for diurnal emission testing, g.

(3) For variable-volume enclosures, defined in § 86.1207(a)(1)(i), the following simplified form of the hydrocarbon mass change equation may be used:

$$M_{HC} = \left(\frac{kP_B V_n \times 10^{-4}}{T}\right) \times \left[\left(C_{HC_f} - rC_{CH_3OH_f}\right) - \left(C_{HC_i} - rC_{CH_3OH_i}\right)\right]$$

(e) *Calibration of equipment for point-source testing of running losses.* For the point-source method, the running loss fuel vapor sampling system shall be calibrated as a CVS system, as specified in § 86.119, with the additional specification that the vapor sampling system verification be conducted as follows:

(1) The following ''gravimetric'' technique can be used to verify that the vapor sampling system and analytical instruments can accurately measure a mass of gas that has been injected into the system. If the vapor sampling system will be used only in the testing of petroleum-fueled engines, system verification may be performed using propane. If the vapor sampling system

will be used with methanol-fueled vehicles as well as petroleum-fueled vehicles, the system verification performance check must include a methanol check in addition to the propane check. (Verification can also be accomplished by constant flow metering using critical flow orifice devices.)

(i) Obtain a small cylinder that has been charged with pure propane gas. Obtain another small cylinder that has been charged with pure methanol if the system will be used for methanol-fueled vehicle testing. Since this cylinder will be heated to 150–155 °F, care must be taken to ensure that the liquid volume of methanol placed in the cylinder does not exceed approximately one-half of the total volume of the cylinder.

(ii) Determine a reference cylinder weight to the nearest 0.01 grams.

(iii) Operate the vapor sampling system in the normal manner and release a known quantity of pure propane into the most frequently used fuel vapor collector during the sampling period (approximately 5 minutes).

(iv) Continue to operate the vapor sampling system in the normal manner and release a known quantity of pure methanol into the system during the sampling period (approximately 5 minutes).

(v) The calculations of § 86.1244 are performed in the normal way, except in the case of propane. The density of propane (17.30 g/ft^3/carbon atom (0.6109 kg/m^3/carbon atom)) is used in place of the density of exhaust hydrocarbons. In the case of methanol, the density of 37.71 g/ft^3 (1.332 kg/m^3) is used.

(vi) The gravimetric mass is subtracted from the vapor sampling system measured mass and then divided by the gravimetric mass to determine the percent accuracy of the system.

(vii) The cause for any discrepancy greater than ±2 percent must be found and corrected.

(2) This procedure shall be conducted in the point-source running loss test environment with the collector installed in a vehicle in the normal test configuration. The fuel of the test vehicle shall either be diesel, or it shall be kept under 100 °F (38 °C). Two to six grams of pure propane and two to six grams of pure methanol shall be injected into the collector while the vehicle is operated over one Heavy-Duty Vehicle Urban Dynamometer Driving Schedule, as described in § 86.1215 and appendix I of this part. The propane and methanol injections shall be conducted at the ambient temperature of 95±5 °F (35±3 °C).

[58 FR 16050, Mar. 24, 1993, as amended at 60 FR 34360, June 30, 1995; 60 FR 43900, Aug. 23, 1995]

§ 86.1218–85 Dynamometer calibration.

(a) The dynamometer shall be calibrated at least once each month or performance verified at least once each week and then calibrated as required. The calibration shall consist of the manufacturer's recommended calibration procedure plus a determination of the dynamometer frictional power absorption. If the dynamometer is to be used for driving only the reference (transient) schedule, the frictional power absorption needs to be determined only at 50.0 mph (80.5 km/hr). If the dynamometer is to be used for driving the steady-state cycle, the frictional power absorption needs to be determined through the range of 15 to 50 mph. One method for determining dynamometer frictional power absorption at 50.0 mph (80.5 km/hr) is described below. The same general method can be used at other speeds. Other methods may be used if shown to yield equivalent results. The measured absorbed road power includes the dynamometer friction as well as the power absorbed by the power absorption unit. The dynamometer is driven above the test speed range. The device used to drive the dynamometer is then disengaged from the dynamometer and the roll(s) is (are) allowed to coastdown. The kinetic energy of the system is dissipated by the dynamometer. This method neglects the variations in roll bearing friction due to the drive axle weight of the vehicle. In the case of dynamometers with paired rolls, the inertia and power absorption of the free (rear) roll may be neglected if its inertia is less than 3.0 percent of the total equivalent inertia required for vehicle testing.

(1) Devise a method to determine the speed of the roll(s) to be measured for

power absorption. A fifth wheel, revolution pickup, or other suitable means may be used.

(2) Place a vehicle on the dynamometer or devise another method of driving the dynamometer.

(3) If the dynamometer is capable of simulating more than a single inertia mass, engage the inertial flywheel or other inertial simulation system for the most common vehicle mass category for which the dynamometer is used. In addition, other vehicle mass categories may be calibrated, if desired.

(4) Drive the dynamometer up to 50 mph (80.5 km/hr).

(5) Record indicated road power.

(6) Drive the dynamometer up to 60 mph (96.9 km/hr).

(7) Disengage the device used to drive the dynamometer.

(8) Record the time for the dynamometer roll(s) to coastdown from 55.0 mph (88.5 km/hr) to 45.0 mph (72.4 km/hr).

(9) Adjust the power absorption unit to a different level.

(10) Repeat steps (4) to (8) above sufficient times to cover the range of road power used.

(11) Calculate absorbed road power (HP_d). (See paragraph (c) of this section.)

(12) Plot indicated road load power at 50 mph (80.5 km/hr) versus road load power at 50 mph (80.5 km/hr).

(b) The performance check consists of conducting a dynamometer coastdown and comparing the coastdown time to that recorded during the last calibration. If the coastdown times differ by more than 1 second or by 5 percent of the time recorded during the last calibration, whichever is greater, a new calibration is required.

(c) Calculations. The road load power actually absorbed by each roll assembly (or roll-inertia weight assembly) of the dynamometer is calculated from the following equation:

$$HP_d = (1/2)\ (W/32.2)\ (V_1^2 - V_2^2)/550t$$

Where:

HP_d = Power, horsepower (kilowatts)
W = Equivalent inertia, lb (kg)
V_1 = Initial velocity, ft/s (m/s) (55 mph = 88.5 km/h = 80.67 ft/s = 24.58 m/s)
V_2 = Final velocity, ft/s (m/s) (45 mph = 72.4 km/h = 66 ft/s = 20.11 m/s)
t = Elapsed time for rolls to coast from 55 mph to 45 mph (88.5 to 72.4 km/hr).

(Expressions in parenthesis are for SI units). When the coastdown is from 55 to 45 mph (88.5 to 72.4 km/hr) the above equation reduces to:

$$HP_d = 0.06073\ (W/t)$$

For SI units:

$$HP_d = 0.09984\ (W/t)$$

The total road load power actually absorbed by the dynamometer is the sum of the absorbed road load power of each roll assembly.

§ 86.1221–90 Hydrocarbon analyzer calibration.

The FID hydrocarbon analyzer shall receive the following initial and periodic calibrations.

(a) *Initial and periodic optimization of detector response.* Prior to its introduction into service and at least annually thereafter, the FID hydrocarbon analyzer shall be adjusted for optimum hydrocarbon response. (The HFID used with methanol-fueled vehicles shall be operated at 235° ±15 °F (113° ±8 °C)). Analyzers used with gasoline-fuel and liquefied petroleum gas-fuel shall be optimized using propane. Analyzers used with natural gas-fuel may be optimized using methane, or if calibrated using propane the FID response to methane shall be determined and applied to the FID hydrocarbon reading. Alternate methods yielding equivalent results may be used, if approved in advance by the Administrator.

(1) Follow the manufacturer's instructions or good engineering practice for instrument startup and basic operating adjustment using the appropriate FID fuel and zero-grade air.

(2) Optimize on the most common operating range. Introduce into the analyzer a propane (or methane as appropriate) in air mixture with a propane (or methane as appropriate) concentration equal to approximately 90 percent of the most common operating range.

(3) Select an operating FID fuel flow rate that will give near maximum response and least variation in response with minor fuel flow variations.

(4) To determine the optimum air flow, use the FID fuel flow setting determined above and vary air flow.

(5) After the optimum flow rates have been determined, record them for future reference.

(b) *Initial and periodic calibration.* Prior to its introduction into service and monthly thereafter the FID hydrocarbon analyzer shall be calibrated on all normally used instrument ranges, and, if applicable, the methanol response factor shall be determined (paragraph (c) of this section). Use the same flow rate as when analyzing sample.

(1) Adjust analyzer to optimize performance.

(2) Zero the hydrocarbon analyzer with zero-grade air.

(3) Calibrate on each normally used operating range with propane in air (or methane in air as appropriate) calibration gases having nominal concentrations of 15, 30, 45, 60, 75 and 90 percent of that range. For each range calibrated, if the deviation from a least squares best-fit straight line is two percent or less of the value at each data point, concentration values may be calculated by use of a single calibration factor for that range. If the deviation exceeds two percent at any point, the best-fit non-linear equation which represents the data to within two percent of each test point shall be used to determine concentration.

(c) *FID response factor to methanol.* When the FID analyzer is to be used for the analysis of hydrocarbon samples containing methanol, the methanol response factor of the analyzer shall be established. The methanol response factor shall be determined at several concentrations in the range of concentrations in the exhaust sample, using either bag samples or gas bottles meeting the requirements of § 86.114.

(1) The bag sample of methanol for analysis in the FID, if used, shall be prepared using the apparatus shown in Figure M90–1. A known volume of methanol is injected, using a microliter syringe, into the heated mixing zone (250 °F (121 °C) of the apparatus. The methanol is vaporized and swept into the sample bag with a known volume of zero grade air measured by a gas flow meter with an accuracy of ±2 percent.

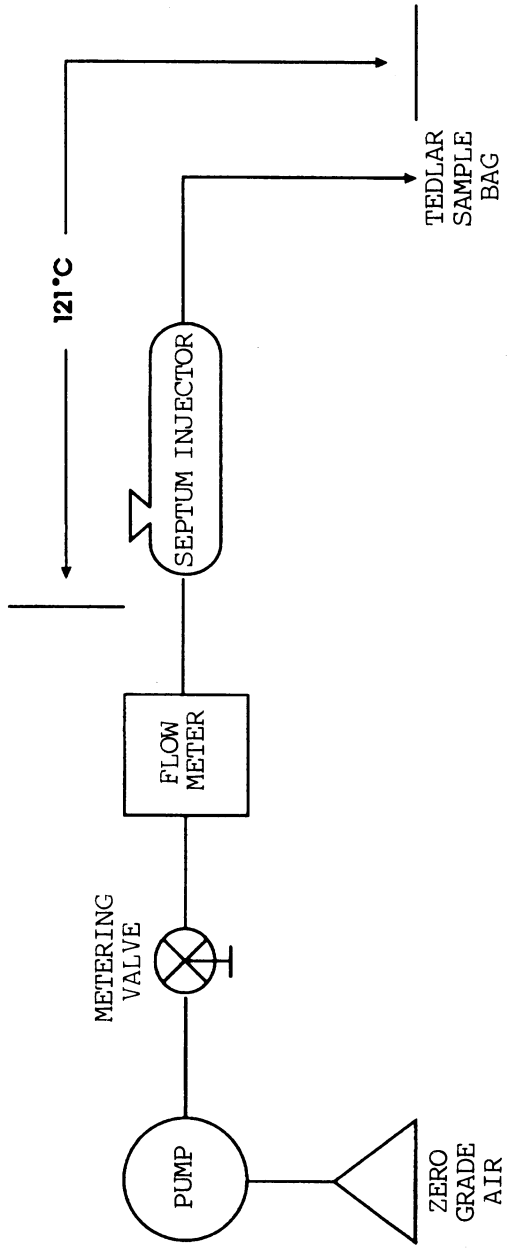

FIGURE M90-1 APPARATUS FOR PREPARATION OF FID METHANOL RESPONSE CALIBRATION MIX

(2) The bag sample is analyzed using the FID.

(3) The FID response factor, r, is calculated as follows:

$$r = FID_{ppm}/SAM_{ppm}$$

Where:

(i) r = FID response factor.

(ii) FID_{ppm} = FID reading in ppmC.

(iii) SAMppm=methanol concentration in the sample bag, or gas bottle, in ppmC. SAMppm for sample bags:

$$= \frac{0.02406 \times \text{Fuel injected} \times \text{Fuel density}}{\text{Air volume} \times \text{Mol. Wt. } CH_3OH}$$

Where:

(iv) 0.02406 = Volume of one mole at 29.92 in Hg and 68 °F, m^3.

(v) Fuel injected = Volume of methanol injected, ml.

(vi) Fuel density = Density of methanol, 0.7914 g/ml.

(vii) Air volume = Volume of zero grade air, m^3.

(viii) Mol. Wt. CH_3OH = 32.04.

(d) The gas chromatograph used in the analysis of methanol samples shall be calibrated at least monthly following manufacturers' recommended procedures (certain equipment may require more frequent calibration based on use and good engineering judgment).

(e) *FID response factor to methane.* When the FID analyzer to be used for the analysis of natural gas-fueled vehicle hydrocarbon samples has been calibrated using propane, the methane response factor of the analyzer shall be established. To determine the total hydrocarbon FID response to methane, known methane in air concentrations traceable to National Institute of Standards and Technology (NIST) shall be analyzed by the FID. Several methane concentrations shall be analyzed by the FID in the range of concentrations in the exhaust sample. The total hydrocarbon FID response to methane is calculated as follows:

r_{CH4} = FIDppm/SAMppm

Where:

(1) r_{CH4} = FID response factor to methane.

(2) FIDppm = FID reading in ppmC.

(3) SAMppm = the known methane concentration in ppmC.

[54 FR 14566, Apr. 11, 1989, as amended at 59 FR 48523, Sept. 21, 1994; 60 FR 34361, June 30, 1995]

§ 86.1226–85 Calibration of other equipment.

Other test equipment used for testing shall be calibrated as often as required by the manufacturer or as necessary according to good practice.

§ 86.1227–90 Test procedures; overview.

(a) The overall test consists of prescribed sequences of fueling, parking, and operating conditions. Vehicles are tested only for evaporative emissions.

(b) The evaporative emission test (gasoline-fueled and methanol-fueled vehicles) is designed to determine hydrocarbon and/or methanol evaporative emissions as a consequence of diurnal temperature fluctuation, urban driving and hot soaks during engine-off periods. It is associated with a series of events representative of heavy-duty vehicle operation, which result in hydrocarbon and/or methanol vapor losses. The test procedure is designed to measure:

(1) Diurnal breathing losses resulting from daily temperature changes, measured by the enclosure technique;

(2) Running losses from suspected sources (if indicated by engineering analysis or vehicle inspection) resulting from a simulated trip on a chassis dynamometer, measured by carbon traps; and

(3) Hot soak losses which result when the vehicle is parked and the hot engine is turned off, measured by the enclosure technique.

(c) Background concentrations are measured for all species for which emissions measurements are made. For evaporative testing, this requires measuring initial concentrations. (When testing methanol-fueled vehicles, manufacturers may choose not to measure background concentrations of methanol, and then assume that the concentrations are zero during calculations.)

[54 FR 14568, Apr. 11, 1989, as amended at 60 FR 34363, June 30, 1995]

§ 86.1227–96 Test procedures; overview.

(a) The overall test consists of prescribed sequences of fueling, parking, and operating conditions. Vehicles are tested only for evaporative emissions.

(b) The evaporative emission test (gasoline-fueled, natural gas-fueled, liquefied petroleum gas-fueled, and methanol-fueled vehicles) is designed

to determine hydrocarbon and/or methanol evaporative emissions as a consequence of diurnal temperature fluctuation urban driving and hot soaks during engine-off periods. It is associated with a series of events representative of heavy-duty vehicle operation, which result in hydrocarbon and/or methanol vapor losses. The test procedure is designed to measure:

(1) Diurnal emissions resulting from daily temperature changes (as well as relatively constant resting losses), measured by the enclosure technique (see § 86.1233);

(2) Running losses resulting from a simulated trip on a chassis dynamometer, measured by the enclosure or point-source technique (see § 86.1234; this test is not required for gaseous-fueled vehicles); and

(3) Hot soak losses, which result when the vehicle is parked and the hot engine is turned off, measured by the enclosure technique (see § 86.1238).

(c) Background concentrations are measured for all species for which emissions measurements are made. For evaporative testing, this requires measuring initial concentrations. (When testing methanol-fueled vehicles, manufacturers may choose not to measure background concentrations of methanol, and then assume that the concentrations are zero during calculations.)

[58 FR 16052, Mar. 24, 1993, as amended at 59 FR 48523, Sept. 21, 1994; 60 FR 34363, June 30, 1995]

§ 86.1228–85 Transmissions.

(a) All test conditions, except as noted, shall be run in a manner representative of in-use operation, and where appropriate, according to the manufacturer's recommendation to the ultimate purchaser.

(b) Except for the first idle mode, idle modes less than one minute in length shall be run with automatic transmissions in ''Drive'' and the wheels braked; manual transmissions shall be in gear with the clutch disengaged, except first idle. The first idle mode and idle modes longer than one minute in length shall be run with automatic transmissions in ''Neutral,'' and manual transmissions shall be in ''Neutral'' with the clutch engaged (clutch may be disengaged for engine start-up).

(c) The vehicle shall be driven with minimum accelerator pedal movement to maintain the desired operation.

(d) Accelerations shall be driven smoothly according to the manufacturer's recommendation to the ultimate purchaser. For manual transmissions, the operator shall accomplish each shift with minimum time. If the vehicle cannot accelerate at the specified rate, the vehicle shall be operated at maximum available power until the vehicle speed reaches the value prescribed for that time in the driving schedule.

(e) For those deceleration modes which decelerate to zero, manual transmission clutches shall be depressed when the speed drops below 15 mph (24.1 km/hr), when engine roughness is evident, or when engine stalling is imminent.

§ 86.1229–85 Dynamometer load determination and fuel temperature profile.

(a) Flywheels, electrical or other means of simulating inertia shall be used. The value of equivalent inertia weight shall be within 250 pounds of the loaded vehicle weight (LVW). Loaded vehicle weight is defined as follows:

(1) For test vehicles which have an actual weight less than 0.5 × (GVWR),

LVW = 0.5 × (Gross Vehicle Weight Rating)

(2) For test vehicles which have an actual weight (As tested) greater than 0.5 × (GVWR),

LVW = Actual Weight of Test Vehicle,

(b) *Power absorption unit adjustment.* (1) The power absorption unit shall be adjusted to reproduce road load power at 50 mph true speed. The indicated road load power setting shall take into account the dynamometer friction. The relationship between road load (absorbed) power and indicated road load power for a particular dynamometer shall be determined by the procedure outlined in § 86.1218–85 or other suitable means.

(2) The road load power used shall be determined from the following equation:

$$RLP = 0.67(H - 0.75)W = 0.00125[LVW - (N \times DW)]$$

Where:

RLP = Road Load Power at 50 mph (horsepower).
H = Vehicle overall maximum height (feet).
W = Vehicle overall maximum width (feet).
LVW = Loaded vehicle weight (pounds).
DW = Vehicle weight supported by the dynamometer (pounds).
N = Number of dynamometer rolls supporting a tire.

or the manufacturer may determine the road load power by an alternate procedure (including coastdown). Such alternate procedures shall exhibit good engineering judgement and shall be subject to review upon request by the Administrator. For vehicles which the manufacturer chooses to certify by the optional light-duty truck certification provision (§ 86.082–1(b)), the evaporative emission test procedure (and standard) will be that specified by the light-duty truck regulations.

(c) [Reserved]

(d) *Fuel temperature profile*—(1) *General requirements*. (i) To be tested for running losses, as specified in § 86.1234, a vehicle must have a fuel temperature profile. The following procedure is used to generate the fuel temperature profile, which serves as a target for controlling fuel temperatures during the running loss test. This profile represents the fuel temperature change that occurs during on-road driving. If a vehicle has more than one fuel tank, a profile shall be established for each tank. Manufacturers may also simultaneously generate a profile for vapor temperatures.

(ii) If a manufacturer uses a vehicle model to develop a profile to represent multiple models, the vehicle model selected must have the greatest expected fuel temperature increase during driving of all those models it represents. Also, manufacturers must select test vehicles with any available vehicle options that increase fuel temperatures during driving (for example, any feature that limits underbody airflow).

(iii) Manufacturers may conduct testing to develop fuel temperature profiles in a laboratory setting, subject to approval by the Administrator. The laboratory facility should simulate outdoor testing to reproduce fuel and vapor temperature behavior over the specified driving schedule. The design of the laboratory facility should include consideration of any parameters that may affect fuel temperatures, such as solar loading, pavement heat, and relative wind velocities around and underneath the test vehicle. Indoor testing to develop the fuel temperature profiles must be conducted with little or no vehicle-specific adjustment of laboratory parameters. Manufacturers would need to maintain an ongoing demonstration of correlation between laboratory and outdoor measurement of fuel temperatures. Specifically, fuel temperatures and pressures from indoor driving should be at least as high as measured when driving outdoors according to the procedures described in this section.

(iv) Small-volume manufacturers, as defined in § 86.094–14(b)(1), may use an alternate method for generating fuel temperature profiles, subject to the approval of the Administrator.

(v) The Administrator may conduct testing to establish any vehicle's temperature profiles or to verify compliance with fuel tank pressure requirements.

(2) *Vehicle instrumentation*. (i) The vehicle must be equipped with temperature sensors and pressure transducers, as described in § 86.1207–96(e) and (f), and a driver's aid, which shall be configured to provide the test driver with the desired vehicle speed vs. time trace and the actual vehicle speed.

(ii) A computer, data logger, or strip chart data recorder shall record the following parameters at a minimum during the test run:

(A) Desired speed;

(B) Actual speed;

(C) Instantaneous average liquid fuel temperature (T_{liq}); and

(D) Vapor space pressure (the Administrator may omit measurement of fuel tank pressure).

(iii) The data recording system described in paragraph (d)(2)(ii) of this section shall be capable of resolving time to ±1 s, capable of resolving temperature to ±2 °F, capable of resolving pressure to ±1.0 inch of water, and capable of resolving speed to ±1 mph. The temperature and pressure signals shall be recorded at intervals of up to 1

minute; speed signals shall be recorded at intervals of up to 1 second.

(3) *Ambient conditions.* The procedure shall be run under the following ambient conditions. Conditions should be representative of sunny summer days.

(i) Starting ambient temperature ($T_{amb,o}$) shall be at least 95 °F, steady or increasing (no more than 2 °F drop) during the procedure. Ambient temperature shall be measured and recorded in regular intervals of at least once every 5 minutes. Measure ambient temperature with the following requirements (based on Federal Standard for Siting Meteorological Sensors at Airports, FCM-S4–1987). The sensors shall be mounted 5±1 feet (1.5±0.3 meters) above ground level. The sensors shall be protected from radiation from the sun, sky, earth, and any other surrounding objects, but at the same time be adequately ventilated. The sensors shall be installed in such a position as to ensure that measurements are representative of the free air circulation in the locality and not influenced by artificial conditions such as large buildings, cooling towers, and expanses of concrete and tarmac. Keep any grass and vegetation within 100 feet (30 meters) of the sensor clipped to a height of about 10 inches (25 centimeters) or less.

(ii) Wind conditions shall be calm to light with maximum wind speed of 15 mph. In the case of temporary gusting, wind speeds between 15 and 25 mph may occur for up to 5 percent of the total driving time without invalidating the data collection. Wind speed shall be measured and recorded in regular intervals of at least once per minute. Measure wind speed with the following requirements (based on *Federal Standard for Siting Meteorological Sensors at Airports,* FCM-S4-1987). The site should be relatively level, but small gradual slopes are acceptable. The sensor shall be mounted 30 to 33 feet (9 to 10 meters) above the average ground height within a radius of 500 feet (150 meters). The sensor height shall not exceed 33 feet, except as necessary to be at least 15 feet (5 meters) above the height of any obstruction (e.g. vegetation, buildings, etc.) within a 500 foot (150 meter) radius. An object is considered to be an obstruction if the included lateral angle from the sensor to the ends of the object is 10 degrees or more.

(iii) Road surface temperature shall be at least 125 °F throughout the driving period. Pavement temperature shall be measured and recorded in regular intervals of at least once per minute. The track temperature may be measured with an embedded sensor, a portable temperature probe, or an infrared pyrometer that can provide an accuracy of ±2 °F. Temperatures must be measured on a surface representative of the surface where the vehicle is driven.

(iv) Conditions shall be sunny or mostly sunny with a maximum cloud cover of 25 percent.

(v) Reported cloud cover, wind speed, and ambient temperature should be consistent with that reported by the nearest weather station; the Administrator may request justification of any discrepancy.

(4) *Profile determination procedure.* (i) Drain the fuel tank(s) and fill with test fuel to the ''tank fuel volume'' defined in § 86.082–2. The test fuel should meet the specifications of § 86.1213, except that fuel with a lower volatility may be used, subject to Administrator approval. Manufacturers using a lower volatility fuel must generate a vapor temperature profile for demonstrating compliance with the limit on fuel tank pressure during the running loss test (see § 86.1234–96).

(ii) The vehicle shall be moved to the location where the data is to be collected. It may be driven a maximum distance of 5 miles and may also be transported by other means. The vehicle shall be stabilized by one of the following methods:

(A) The vehicle shall be parked for a minimum of 12 hours in an open area on a surface that is representative of the test road, without any artificial heating or cooling of the fuel. The orientation of the front of the vehicle during parking (e.g., N, SW, etc.) shall be documented.

(B) The vehicle may be soaked in a temperature-controlled environment to stabilize fuel temperatures. Before starting the drive, the vehicle shall be stabilized with fuel temperatures 95±3 °F for at least one hour. The fuel temperature may not exceed 98 °F at any

time before the beginning of the driving schedule, during which only whole-vehicle heating and cooling may be used to control fuel temperatures. If a manufacturer uses the provisions of paragraph (d)(7)(v) of this section to establish a lower initial fuel temperature for the running loss test, the fuel in the test vehicle may not be stabilized at a temperature higher than the newly established initial fuel temperature.

(iii) Once the ambient conditions specified in paragraph (d)(3) of this section are met and the vehicle has been stabilized according to paragraph (d)(4)(ii) of this section, the vehicle's engine may be started. The vehicle's air conditioning system (if so equipped) shall be set to the ''normal'' air conditioning mode and adjusted to the minimum discharge air temperature and high fan speed. Vehicles equipped with automatic temperature controlled air conditioning systems shall be set to operate in ''automatic'' temperature and fan modes with the system set at 72 °F.

(iv) The vehicle may be operated at minimum throttle for a period up to 60 seconds prior to the start of the driving schedule, as necessary to move from the parking location onto the road surface. The driver's aid shall be started and the vehicle operated over the driving cycle specified in § 86.1234–96(b) with the transmission operated in the same manner as specified in § 86.128–79. The data recording system shall provide a record of the required parameters over the entire period of driving.

(5) *Records required*. In addition to the vehicle data recording, the following parameters shall be documented for the determination of the fuel temperature profile:

(i) Date and time of vehicle fueling;

(ii) Odometer reading at vehicle fueling;

(iii) Date and time vehicle was parked, parking location and orientation;

(iv) Odometer reading at parking;

(v) Date and time engine was started;

(vi) Time of initiation of the first driving cycle;

(vii) Time of completion of the driving cycle;

(viii) Ambient temperatures throughout the period of driving (T_{amb});

(ix) Wind speed throughout the period of driving;

(x) Track surface temperatures throughout the period of driving cycle (T_{sur});

(xi) Percent cloud cover during the period of driving; and

(xii) Ambient temperature, wind speed, and percent cloud cover reported by the nearest weather station for the time corresponding most closely to the period of driving.

(6) *Fuel tank pressure*. Tank pressure shall not exceed 10 inches of water at any time during the temperature profile determination unless a pressurized system is used and the manufacturer demonstrates that vapor would not be vented to the atmosphere upon fuel cap removal.

(7) *Calculation of temperature profiles*. (i) The traces from the driving schedule shall be verified to meet the speed tolerance requirements of § 86.1215. The following conditions shall be verified:

(A) $T_{amb,i} \geq T_{amb,o} - 2$ °F.

Where,

(*1*) i=instantaneous measurement throughout the drive; and

(*2*) o=initial measurement at the start of the specified driving schedule.

(B) $T_{amb,o} \geq 95$ °F.

(C) $T_{sur,i} - T_{amb,i} \geq 30$ °F.

(D) $W_{max} \leq 15$ mph.

(ii) Failure to comply with any of these requirements shall result in invalidation of the data and require that the procedure be repeated, beginning with the fuel drain at paragraph (d)(4)(i) of this section.

(iii) If all these requirements are met, the following calculations shall be performed to determine a profile for liquid fuel temperatures and, if applicable, for vapor temperatures: $T_{i,profile} = T_i - T_o$.

Where:

(A) $T_{i,profile}$=the series of temperatures that comprise the relative temperature profile.

(B) T_i=the series of observed liquid fuel or vapor temperatures during the drive.

(C) T_o=the liquid fuel or vapor temperature observed at the start of the specified driving schedule.

(iv) The relative temperature profile consists of the set of temperatures at each 1-minute interval. If temperatures are sampled more frequently than once per minute, the temperature data points may represent a rolling average of temperatures sampled for up to one-minute intervals. If multiple valid test runs are conducted for any model, then all the collected data shall be used to calculate a composite profile, based on the average temperatures at each point. The absolute temperature profile is determined by adding 95 °F (35 °C) to each point of the relative profile. Other methodologies for developing corrected liquid fuel and vapor space temperature profiles may be used if demonstrated to yield equivalent results and approved in advance by the Administrator.

(v) Manufacturers may use a lower initial fuel temperature for the running loss test, if approved in advance by the Administrator. To demonstrate the need for such an adjustment, manufacturers would be expected to determine the maximum fuel temperature experienced by a vehicle during an extended park or after driving one UDDS cycle when exposed to the ambient conditions described in paragraph (d)(3) of this section. To use this provision, manufacturers would have to show maximum fuel temperatures no greater than 92 °F.

[48 FR 1456, Jan. 12, 1983, as amended at 48 FR 52210, Nov. 16, 1983; 58 FR 16053, Mar. 24, 1993; 60 FR 43901, Aug. 23, 1995; 65 FR 59957, Oct. 6, 2000]

§ 86.1230–85 Test sequence; general requirements.

The test sequence shown in Figure M85–1 show the steps encountered as the test vehicle undergoes the test procedure. Ambient temperature levels encountered by the test vehicle throughout the test sequence shall not be less than 68° F (20° C) nor more than 86° F (30° C). The vehicle shall be approximately level during all phases of the test sequence to prevent abnormal fuel distribution.

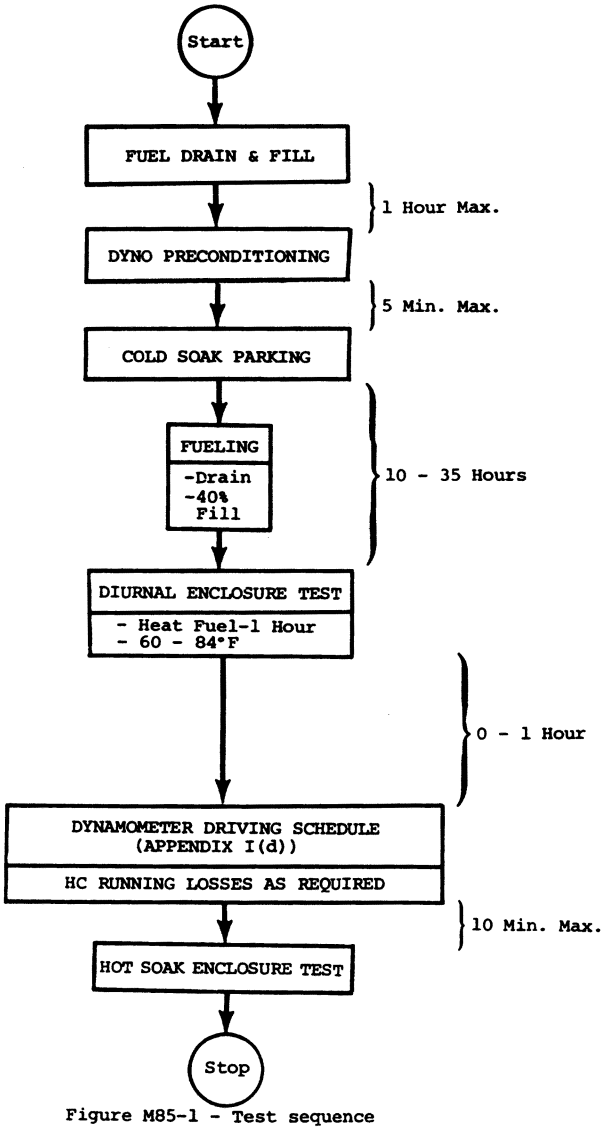

Figure M85-1 - Test sequence

[48 FR 1456, Jan. 12, 1983, as amended at 48 FR 52210, Nov. 16, 1983]

§ 86.1230–96 Test sequence; general requirements.

(a)(1) *Gasoline- and methanol-fueled vehicles.* The test sequence shown in figure M96–1 of this section shows the steps encountered as the test vehicle undergoes the procedures subsequently described to determine conformity with the standards set forth. The full three-diurnal sequence depicted in figure M96–1 tests vehicles for all sources

of evaporative emissions. The supplemental two-diurnal test sequence is designed to verify that vehicles sufficiently purge their evaporative canisters during the dynamometer run. Sections 86.1232–96, 86.1233–96 and 86.1238–96 describe the separate specifications of the supplemental two-diurnal test sequence.

(2) *Gaseous-fueled vehicles*. The test sequence shown in figure M96–1 of this section shows the steps encountered as the test vehicle undergoes the procedures subsequently described to determine conformity with the standards set forth, with the exception that the fuel drain and fill and precondition canister steps are not required for gaseous-fueled vehicles. In addition, the supplemental two-diurnal test and the running loss test are not required.

(b) The vehicle test for fuel spitback during fuel dispensing is conducted as a stand-alone test (see § 86.1246). This test is not required for gaseous-fueled vehicles.

(c) Ambient temperature levels encountered by the test vehicle shall be not less than 68 °F nor more than 86 °F, unless otherwise specified. If a different ambient temperature is specified for soaking the vehicle, the soak period may be interrupted once for up to 10 minutes to transport the vehicle from one soak area to another, provided the ambient temperature experienced by the vehicle is never below 68 °F. The temperatures monitored during testing must be representative of those experienced by the test vehicle.

(d) The vehicle shall be approximately level during all phases of the test sequence to prevent abnormal fuel distribution.

(e) If tests are invalidated after collection of emission data from previous test segments, the test may be repeated to collect only those data points needed to complete emission measurements. Compliance with emission standards may be determined by combining emission measurements from different test runs. If any emission measurements are repeated, the new measurements supersede previous values.

Federal Test Procedure

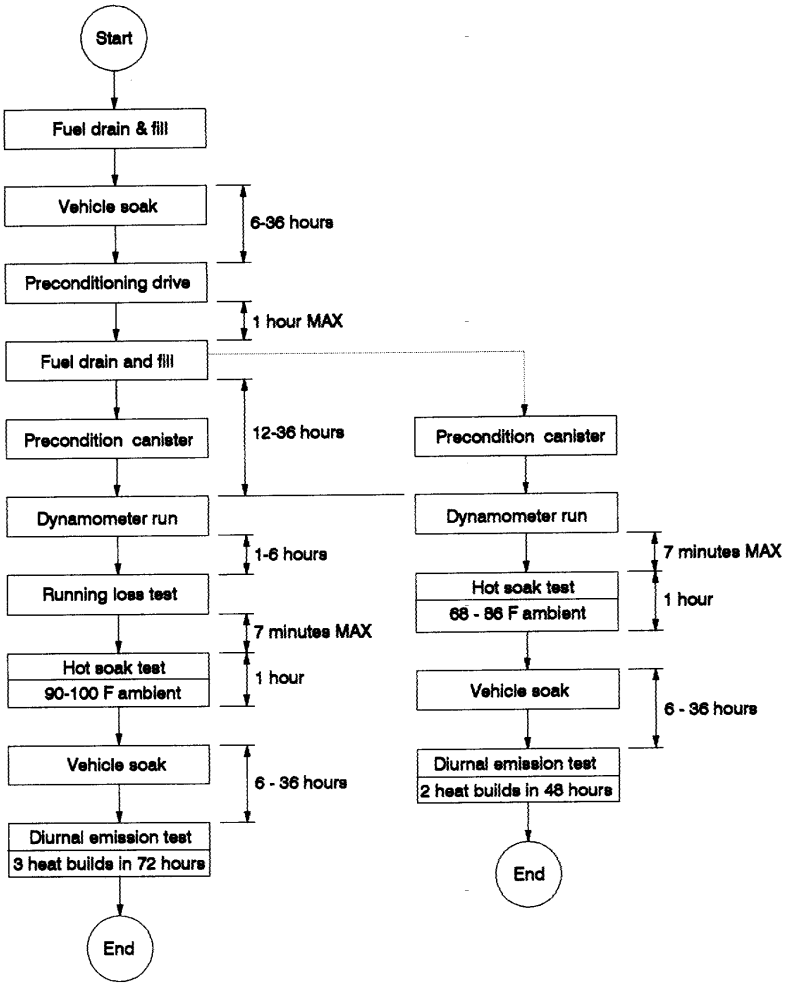

Figure M96-1 Test sequence

[58 FR 16054, Mar. 24, 1993, as amended at 59 FR 48524, Sept. 21, 1994; 60 FR 43902, Aug. 23, 1995]

§ 86.1231–90 Vehicle preparation.

(a) Prepare the fuel tank(s) for recording the temperature of the prescribed test fuel at the approximate mid-volume of the fuel when the tank is 40 percent full.

(b) Provide additional fittings and adapters, as required, to accommodate a fuel drain at the lowest point possible in the tank(s) as installed on the vehicle.

(c)(1) Any vapor storage device which absorbs HC vapors and/or CH_3OH vapors and subsequently releases them to the engine induction system during vehicle operation shall be subjected to a minimum of 30 load-purge cycles or the equivalent thereof (4,000 miles or more of actual in-use vehicle service accumulation shall be considered equivalent). One load-purge cycle shall be accomplished by conducting one of the following procedures:

(i) *Vehicle Procedure.* Park a fully-warm vehicle (a vehicle that has been driven for at least 15 minutes) for a time period of at least 3 hours. Fill the fuel tank(s) to the prescribed ''tank fuel volume'' with specified test fuel (§ 86.1213) at room temperature. Then drive the vehicle through at least one cycle of the HDV reference (transient) urban dynamometer driving schedule.

(ii) *Laboratory Procedure.* Flow vapors (gasoline or methanol, as appropriate) into a pre-purged vapor storage device until at least 10 percent of the input HC or CH_3OH mass flow rate is passing through the device. Purge the device with a volume of air which is at least as great as, and which has a temperature no higher than that which would be drawn through the device if it were installed on the test vehicle and the vehicle was operated according to the HDV reference (transient) urban dynamometer driving schedule. The vapor flow rate, the method used to generate the vapors, the air flow rate, and the air temperature shall be recorded. If pre-blended gas is used, then the composition and characteristics of the gas shall be recorded.

(2) Ten load-purge cycles accumulated immediately prior to testing shall be conducted according to the method in paragraph (c)(1)(i) of this section. The preceding 20 cycles (minimum) shall be conducted according to either of the methods in paragraph (c)(1) (i) or (ii) of this section.

[54 FR 14568, Apr. 11, 1989]

§ 86.1231–96 Vehicle preparation.

(a) For gasoline- and methanol-fueled vehicles prepare the fuel tank(s) for recording the temperature of the prescribed test fuel, as described in § 86.1207–96(e).

(b) Provide additional fittings and adapters, as required, to accommodate a fuel drain at the lowest point possible in the tank(s) as installed on the vehicle.

(c) For preconditioning that involves loading the evaporative emission canister(s) with butane, provide valving or other means as necessary to allow purging and loading of the canister(s).

(d) For vehicles to be tested for running loss emissions, prepare the fuel tank(s) for measuring and recording the temperature and pressure of the fuel tank as specified in § 86.1207–96 (e) and (f). Measurement of vapor temperature is optional during the running loss test. If vapor temperature is not measured, fuel tank pressure need not be measured.

(e) For vehicles to be tested for running loss emissions, prepare the exhaust system by sealing or plugging all detectable sources of exhaust gas leaks. The exhaust system shall be tested or inspected to ensure that detectable exhaust hydrocarbons are not emitted into the running loss enclosure during the running loss test.

[58 FR 16056, Mar. 24, 1993, as amended at 60 FR 43904, Aug. 23, 1995]

§ 86.1232–90 Vehicle preconditioning.

(a) The vehicle shall be moved to the test area and the following operations performed:

(1) The fuel tank(s) shall be drained through the provided fuel tank(s) drain(s) and filled to the prescribed ''tank fuel volume'' with the specified test fuel, § 86.1213. For the above operations the evaporative emission control system shall neither be abnormally purged nor abnormally loaded.

(2) Within one hour of being fueled the vehicle shall be placed, either by being driven or pushed, on a dynamometer and operated through one HDV

urban dynamometer driving schedule (see § 86.1215). A test vehicle may not be used to set dynamometer horsepower.

(3) The Administrator may choose to conduct additional preconditioning to insure that the evaporative emissions control system is stabilized. The additional preconditioning shall consist of an initial one hour minimum soak and one, two or three driving cycles of the dynamometer driving schedule, as described in paragraph (a)(2) of this section, each followed by a soak of at least one hour with engine off, engine compartment cover closed and cooling fan off. The vehicle may be driven off the dynamometer for the soak period which follows each driving cycle.

(b) After completion of preconditioning the vehicle shall be driven off the dynamometer and parked. The engine shall be turned off within five minutes of completion of preconditioning. The vehicle may be pushed to its parking location after its engine has been turned off.

[54 FR 14568, Apr. 11, 1989]

§ 86.1232–96 Vehicle preconditioning.

(a) Fuel tank cap(s) of gasoline- and methanol-fueled vehicles shall be removed during any period that the vehicle is parked outdoors awaiting testing, to prevent unusual loading of the canisters. During this time care must be taken to prevent entry of water or other contaminants into the fuel tank. During storage in the test area while awaiting testing, the fuel tank cap(s) may be in place. The vehicle shall be moved into the test area and the following operations performed.

(b)(1) *Gasoline- and methanol-fueled vehicles.* Drain the fuel tank(s) and fill with test fuel, as specified in § 86.1213, to the ''tank fuel volume'' defined in § 86.082–2. The fuel cap(s) shall be installed within one minute after refueling.

(2) *Gaseous-fueled vehicles.* Vehicle fuel tanks are to be filled with fuel that meets the specifications in § 86.113. Fuel tanks shall be filled to a minimum of 75% of service pressure for natural gas-fueled vehicles or a minimum of 75% of available fill volume for liquefied petroleum gas-fueled vehicles. Prior draining of the fuel tanks is not called for if the fuel in the tanks already meets the specifications in § 86.113.

(c) Gasoline- and methanol-fueled vehicles shall be soaked for at least 6 hours after being refueled. Gaseous-fueled vehicles shall be soaked for at least 1 hour after being refueled. Following this soak period, the test vehicle shall be placed, either by being driven or pushed, on a dynamometer and operated through one driving schedule, specified in § 86.1215 and appendix I of this part. Once a test vehicle has completed the refueling and vehicle soak steps specified in paragraphs (b) and (c) of this section, these steps may be omitted in subsequent testing with the same vehicle and the same fuel specifications, provided the vehicle remains under laboratory ambient temperature conditions for at least 6 hours before starting the next test. In such cases, each subsequent test shall begin with the preconditioning drive specified in this paragraph. The test vehicle may not be used to set dynamometer horsepower.

(d) [Reserved]

(e) The Administrator may choose to conduct additional preconditioning to ensure that the evaporative emissions control system is stabilized. The additional preconditioning shall consist of an initial one hour minimum soak and one, two or three driving cycles of the dynamometer driving schedule, as described in paragraph (c) of this section, each followed by a soak of at least one hour with engine off, engine compartment cover closed and cooling fan off. The vehicle may be driven off the dynamometer for the soak period that follows each driving cycle.

(f)(1) *Gasoline- and methanol-fueled vehicles.* After completion of the preconditioning drive, the vehicle shall be driven off the dynamometer. The vehicle's fuel tank(s) shall be drained and then filled with test fuel, as specified in § 86.1213, to the ''tank fuel volume'' defined in § 86.082–2. The vehicle shall be refueled within 1 hour after completion of the preconditioning drive. The fuel cap(s) shall be installed within 1 minute after refueling. The vehicle shall be parked within five minutes after refueling.

(2) *Gaseous-fueled vehicles.* After completion of the preconditioning drive,

the vehicle shall be driven off the dynamometer. Vehicle fuel tanks shall be refilled with fuel that meets the specifications in § 86.1213. Fuel tanks shall be filled to a minimum of 75% of service pressure for natural gas-fueled vehicles or a minimum of 75% of available fill volume for liquefied petroleum gas-fueled vehicles. Prior draining of the fuel tanks is not called for if the fuel in the tanks already meets the specifications in § 86.1213. The vehicle shall be parked within five minutes after refueling, or, in the absence of refueling, within five minutes after completion of the preconditioning drive.

(g) The vehicle shall be soaked for not less than 12 hours nor more than 36 hours between the end of the refueling event and the beginning of the cold start exhaust emission test.

(h) During the soak period for the three-diurnal test sequence described in § 86.1230–96, evaporative canisters, if the vehicle is so equipped, shall be preconditioned according to the following procedure. For vehicles with multiple canisters in a series configuration, the set of canisters must be preconditioned as a unit. For vehicles with multiple canisters in a parallel configuration, each canister must be preconditioned separately. If production evaporative canisters are equipped with a functional service port designed for vapor load or purge steps, the service port shall be used during testing to precondition the canister. In addition, for model year 1998 and later vehicles equipped with refueling canisters, these canisters shall be preconditioned for the three-diurnal test sequence according to the procedure in paragraph (j)(1) of this section. If a vehicle is designed to actively control evaporative or refueling emissions without a canister, the manufacturer shall devise an appropriate preconditioning procedure, subject to the approval of the Administrator.

(1)(i) Prepare the evaporative emission canister for the canister purging and loading operation. The canister shall not be removed from the vehicle, unless access to the canister in its normal location is so restricted that purging and loading can only reasonably be accomplished by removing the canister from the vehicle. Special care shall be taken during this step to avoid damage to the components and the integrity of the fuel system. A replacement canister may be temporarily installed during the soak period while the canister from the test vehicle is preconditioned.

(ii) The canister purge shall be performed with ambient air of humidity controlled to 50±25 grains per pound of dry air. This may be accomplished by purging the canister in a room that is conditioned to this level of absolute humidity. The flow rate of the purge air shall be maintained at a nominal flow rate of 0.8 cfm and the duration shall be determined to provide a total purge volume flow through the canister equivalent to 300 canister bed volume exchanges. The bed volume is based on the volume of adsorbing material in the canister.

(iii) The evaporative emission canister shall then be loaded by sending to the canister an amount of commercial grade butane vapors equivalent to 1.5 times its nominal working capacity. The canister shall be loaded with a mixture composed of 50 percent butane and 50 percent nitrogen by volume at a rate of 15±2 grams butane per hour. If the canister loading at that rate takes longer than 12 hours, a manufacturer may determine a new rate, based on completing the canister loading in no less than 12 hours. The new rate may be used for all subsequent canister loading according to paragraph (h) of this section. The time of initiation and completion of the canister loading shall be recorded.

(iv) The determination of a canister's nominal working capacity shall be based on the average capacity of no less than five canisters that are in a stabilized condition.

(A) For stabilization, each canister must be loaded no less than 10 times and no more than 100 times to 2-gram breakthrough with a 50/50 mixture by volume of butane and nitrogen, at a rate of 15 grams butane per hour. Each canister loading step must be preceded by canister purging with 300 canister bed volume exchanges at 0.8 cfm.

(B) For determining working capacity, each canister must first be purged with 300 canister bed volume exchanges at 0.8 cfm. The working capacity of each canister shall be established by

determining the mass of butane required to load the canister from the purged state so that it emits 2 grams of hydrocarbon vapor; the canister must be loaded with a 50/50 mixture by volume of butane and nitrogen, at a rate of 15 grams butane per hour.

(2) For methanol-fueled and flexible-fueled vehicles, canister preconditioning shall be performed with a fuel vapor composition representative of that which the vehicle would generate with the fuel mixture used for the current test. Manufacturers shall develop a procedure to precondition the evaporative canister, if the vehicle is so equipped, for the different fuel. The procedure shall represent a canister loading equivalent to that specified in paragraph (h)(1) of this section and shall be approved in advance by the Administrator.

(i) [Reserved]

(j) For the supplemental two-diurnal test sequence described in § 86.1230–96, one of the following methods shall be used to precondition evaporative canisters during the soak period specified in paragraph (g) of this section. For vehicles with multiple canisters in a series configuration, the set of canisters must be preconditioned as a unit. For vehicles with multiple canisters in a parallel configuration, each canister must be preconditioned separately. In addition, for model year 1998 and later vehicles equipped with refueling canisters, these canisters shall be preconditioned for the supplemental two-diurnal test sequence according to the procedure in paragraph (j)(1) of this section. Canister emissions are measured to determine breakthrough. Breakthrough is here defined as the point at which the cumulative quantity of hydrocarbons emitted is equal to 2 grams.

(1) *Butane loading to breakthrough.* The following procedure provides for emission measurement in an enclosure. Breakthrough may also be determined by measuring the weight gain of an auxiliary evaporative canister connected downstream of the vehicle's canister, in which case, the following references to the enclosure can be ignored. The auxiliary canister shall be well purged prior to loading. If production evaporative canisters are equipped with a functional service port designed for vapor load or purge steps, the service port shall be used during testing to precondition the canister.

(i) Prepare the evaporative/refueling emission canister for the canister loading operation. The canister shall not be removed from the vehicle, unless access to the canister in its normal location is so restricted that purging and loading can only reasonably be accomplished by removing the canister from the vehicle. Special care shall be taken during this step to avoid damage to the components and the integrity of the fuel system. A replacement canister may be temporarily installed during the soak period while the canister from the test vehicle is preconditioned.

(ii) The evaporative emission enclosure shall be purged for several minutes. WARNING: If at any time the concentration of hydrocarbons, of methanol, or of methanol and hydrocarbons exceeds 15,000 ppm C the enclosure should be immediately purged. This concentration provides at least a 4:1 safety factor against the lean flammability limit.

(iii) The FID hydrocarbon analyzer shall be zeroed and spanned immediately prior to the canister loading procedure.

(iv) If not already on, the evaporative enclosure mixing fan shall be turned on at this time.

(v) Place the vehicle in a sealed enclosure and measure emissions with a FID.

(vi)(A) For gasoline-fueled vehicles, load the canister with a mixture composed of 50 percent butane and 50 percent nitrogen by volume at a rate of 40 grams butane per hour.

(B) For methanol-fueled and flexible-fueled vehicles, canister preconditioning shall be performed with a fuel vapor composition representative of that which the vehicle would generate with the fuel mixture used for the current test. Manufacturers shall develop a procedure to precondition the evaporative canister, if the vehicle is so equipped, for the different fuel.

(vii) As soon as the canister reaches breakthrough, the vapor source shall be shut off.

(viii) Reconnect the evaporative emission canister and restore the vehicle to its normal operating condition.

(2) *Load with repeated diurnal heat builds to breakthrough.* The following procedure provides for emission measurement in an enclosure. Breakthrough may also be determined by measuring the weight gain of an auxiliary evaporative canister connected downstream of the vehicle's canister, in which case, the following references to the enclosure can be ignored. The auxiliary canister shall be well purged with dry air prior to loading.

(i) The evaporative emission enclosure shall be purged for several minutes. WARNING: If at any time the concentration of hydrocarbons, of methanol, or of methanol and hydrocarbons exceeds 15,000 ppm C the enclosure should be immediately purged. This concentration provides at least a 4:1 safety factor against the lean flammability limit.

(ii) The FID hydrocarbon analyzer shall be zeroed and spanned immediately prior to the diurnal heat builds.

(iii) If not already on, the evaporative enclosure mixing fan shall be turned on at this time.

(iv) The fuel tank(s) of the prepared vehicle shall be drained and filled with test fuel, as specified in § 86.1213, to the ''tank fuel volume'' defined in § 86.082–2. The average temperature of the dispensed fuel shall be 60±12 °F (16±7 °C). The fuel tank cap(s) shall be installed within 1 minute after refueling.

(v) Within one hour of being refueled, the vehicle shall be placed, with the engine shut off, in the evaporative emission enclosure. The fuel tank temperature sensor shall be connected to the temperature recording system. A heat source, specified in § 86.1207–90(d), shall be properly positioned with respect to the fuel tank(s) and connected to the temperature controller.

(vi) The temperature recording system shall be started.

(vii) The fuel may be artificially heated to the starting diurnal temperature.

(viii) When the fuel temperature reaches at least 69 °F (21 °C), immediately turn off purge blower (if not already off); close and seal enclosure doors; and initiate measurement of the hydrocarbon level in the enclosure.

(ix) When the fuel temperature reaches 72±2 °F (22±1 °C), start the diurnal heat build.

(x) The fuel shall be heated in such a way that its temperature change conforms to the following function to within ±4 °F (±3 °C):

$F = T_o + 0.4t$; or

for SI units,

$C = T_o + (2/9)t$.

Where,

F=fuel temperature, °F;
C=fuel temperature, °C;
t=time since beginning of test, minutes; and
T_o=initial temperature in °F (°C for SI units).

(xi) As soon as breakthrough occurs or when the fuel temperature reaches 96 °F (36 °C), whichever occurs first, the heat source shall be turned off, the enclosure doors shall be unsealed and opened, and the vehicle fuel tank cap(s) shall be removed. If breakthrough has not occurred by the time the fuel temperature reaches 96 °F (36 °C), the heat source shall be removed from the vehicle, the vehicle shall be removed (with engine still off) from the evaporative emission enclosure and the entire procedure outlined in paragraph (j)(2) of this section shall be repeated until breakthrough occurs.

(xii) After breakthrough occurs, the fuel tank(s) of the prepared vehicle shall be drained and filled with test fuel, as specified in § 86.1213, to the ''tank fuel volume'' defined in § 86.082–2. The fuel shall be stabilized to a temperature within 3 °F of the lab ambient before beginning the driving cycle for the dynamometer run.

(k) The Administrator may conduct the vehicle preparation and preconditioning for measurement of fuel economy or exhaust emissions according to the procedures specified in §§ 86.1232–90 and 86.1233–90, in lieu of the procedures specified in this section.

(l) Vehicles to be tested for exhaust emissions only shall be processed according to §§ 86.1235 through 86.1237. Vehicles to be tested for evaporative emissions shall be processed in accordance with the procedures in §§ 86.1233 through 86.1238, starting with § 86.1235.

(m) Vehicles to be tested for evaporative emissions with the supplemental two-diurnal test sequence described in § 86.1230–96, shall proceed according to §§ 86.1235 through 86.1237, followed by the supplemental hot soak test (see § 86.1238–96(k)) and the supplemental diurnal emission test (see § 86.1233–96(p)).

(n) With prior approval of the Administrator, manufacturers may use an alternative canister loading method in lieu of the applicable canister loading method described in the provisions of § 86.1232–96(h), § 86.1232–96 (j)(1) and § 86.1232–96 (j)(2), provided the alternative method is shown to be equivalent or result in a more fully loaded canister (a canister that has adsorbed an equal or greater amount of hydrocarbon vapors) than the applicable canister loading method required by the provisions of paragraphs (h), (j)(1), and (j)(2) of this section. Additionally, the Administrator may conduct confirmatory certification testing and in-use testing using the alternative canister loading method used by the manufacturer to test applicable certification and/or in-use vehicles or one of the methods outlined in the provisions of paragraphs (h), (j)(1), and (j)(2) of this section.

[58 FR 16056, Mar. 24, 1993, as amended at 59 FR 48524, Sept. 21, 1994; 60 FR 43904, Aug. 23, 1995; 65 FR 59958, Oct. 6, 2000; 70 FR 72928, Dec. 8, 2005]

§ 86.1233–90 Diurnal breathing loss test.

(a) Following vehicle preparation and vehicle preconditioning procedures described in §§ 86.1231 and 86.1232, the diurnal test shall start not less than 10 or more than 35 hours after the end of the preconditioning procedure. The start of vehicle operation shall follow the end of the diurnal test within one hour.

(b) The evaporative emissions enclosure shall be purged for several minutes immediately prior to the test.

NOTE: If at any time the concentration of hydrocarbons, or of methanol, or of hydrocarbons and methanol exceeds 15,000 ppm C the enclosure should be immediately purged. This concentration provides a 4:1 safety factor against the lean flammability limit.

(c) The FID hydrocarbon analyzer shall be zeroed and spanned immediately prior to the test.

(d) Impingers charged with known volumes of pure deionized water shall be placed in the methanol sampling system (methanol-fueled vehicles only).

(e) If not already on, the evaporative enclosure mixing fan(s) shall be turned on at this time.

(f) For vehicles with multiple tanks, the largest tank shall be designated as the primary tank and shall be heated in accordance with the procedures described in paragraph (m) of this section. All other tanks shall be designated as auxiliary tanks and shall undergo a similar heat build such that the fuel temperature shall be within 3 °F (1.6 °C) of the primary tank.

(g) Immediately prior to the diurnal breathing loss test, the fuel tank(s) of the prepared vehicle shall be drained and recharged with the specified test fuel as defined in § 86.1213 to the prescribed ''tank fuel volume'', as defined in § 86.078–2. The temperature of the fuel prior to its delivery to the fuel tank shall be between 45 °F and 60 °F (7.2 °C and 16 °C). The fuel tank cap(s) is not installed until the diurnal heat build begins.

(h) The test vehicle, with the engine shut off, shall be moved into the evaporative emission enclosure, the test vehicle windows and any storage compartments shall be opened, the fuel tank temperature sensor shall be connected to the temperature recording system, and, if required, the heat source shall be properly positioned with respect to the fuel tank(s) and/or connected to the temperature controller.

(i) The temperature recording system shall be started.

(j) The fuel may be artificially heated to the starting diurnal temperature, 60 °F±2 °F (16 °C±1.1 °C).

(k) When the fuel temperature recording system reaches at least 58 °F (14 °C), immediately:

(1) Install fuel tank cap(s).

(2) Turn off purge blowers, if not already off at this time.

(3) Close and seal enclosure doors.

(l) When the fuel temperature recording system reaches 60 °F ±2 °F (16 °C ±1.1 °C) immediately:

(1) Analyze enclosure atmosphere for hydrocarbons and record. This is the

initial (time = 0 minutes) hydrocarbon concentration, C_{HCi} (*see* § 86.1243).

(2) Simultaneously with initiation of the hydrocarbon analysis, initiate collection of the methanol sample by drawing a sample from the enclosure through the sampling system for four minutes. This is the initial methanol measurement from which methanol concentration C_{CH3OHi} and mass are calculated. Remove impingers and replace with freshly charged clean impingers which will be used to collect the final methanol sample.

(3) Record barometric pressure reading. This is the initial (time = 0 minutes) barometric pressure, P_{bi} (*see* § 86.1243).

(4) Record enclosure ambient temperature. This is the initial (time = 0 minutes) enclosure ambient temperature, T_i (*see* § 86.1243).

(5) Start diurnal heat build and record time. This commences the 60±2 minute test period.

(m) The fuel shall be heated in such a way that its temperature change conforms to the following function to within ±3 °F (±1.6 °C):

(1) $F = T_o + 0.4t$

(2) *For SI units,* $C = T_o + (2/9)t$

Where:

F = fuel temperature, °F.
C = fuel temperature, °C.
t = heating time, minutes.
T_o = initial temperature in °F (or in °C for SI units).

After 60±2 minutes of heating, the fuel temperature rise shall be 240±1 °F (13.30±0.5 °C).

(n) The FID hydrocarbon analyzer shall be zeroed and spanned immediately prior to the end of the diurnal test.

(o)(1) The end of the diurnal breathing loss test occurs 60±2 minutes after the heat build begins (paragraph (k)(4) of this section). Analyze the enclosure atmosphere for hydrocarbon and record. This is the final (time = 60 minutes) hydrocarbon concentration, C_{HCf} (*see* § 86.1234). The time (or elapsed time) of this analysis shall be recorded.

(2) Simultaneously with the start of the hydrocarbon analysis, initiate collection of the methanol sample. Sample for four minutes. This is the final methanol sample.

(3) *Alternate method for methanol sampling.* Since sample times of longer than four minutes may be necessary in order to collect an adequate and representative sample of methanol at the end of a test (when SHED concentrations are usually increasing rapidly), it may be necessary to rapidly collect the methanol sample in a bag and then bubble the bag sample through the impingers at the specified flow rate. The time elapsed between collection of the bag sample and flowing through the impingers should be minimized in order to prevent any losses. This alternative must be adopted if the four minute sample period is inadequate to collect a sample of sufficient concentration to allow accurate GC analysis.

(4) Record barometric pressure reading. This is the final (time = 60 minutes) barometric pressure, P_{bf} (*see* § 86.1243).

(5) Record enclosure ambient temperature. This is the final (time = 60 minutes) enclosure ambient temperature, T_f (*see* § 86.1243).

(p) The heat source shall be turned off and the enclosure doors unsealed.

(q) The heat source shall be moved away from the vehicle, if required, and/or disconnected from the temperature controller, the fuel tank temperature sensor shall be disconnected from the temperature recording system, and the test vehicle windows and any storage compartments may be closed. The vehicle shall be either driven or pushed out of the evaporative emission enclosure.

[54 FR 14568, Apr. 11, 1989]

§ 86.1233–96 Diurnal emission test.

(a)(1) The diurnal emission test for gasoline-, methanol- and gaseous-fueled vehicles consists of three 24-hour test cycles following the hot soak test. Emissions are measured for each 24-hour cycle, with the highest emission level used to determine compliance with the standards specified in subpart A of this part. The Administrator may truncate a test after any 24-hour cycle without affecting the validity of the collected data. Sampling of emissions from the running loss and hot soak tests is not required as preparation for the diurnal emission test. The diurnal

emission test may be conducted as part of either the three-diurnal test sequence or the supplemental two-diurnal test sequence, as described in § 86.1230–96.

(2) For the full three-diurnal test sequence, the diurnal emission test outlined in paragraphs (b) through (o) of this section follows the high-temperature hot soak test concluded in § 86.1238–96(j).

(3) For the supplemental two-diurnal test sequence, the diurnal emission test outlined in paragraph (p) of this section follows the alternate hot soak test specified in § 86.1238–96(k). This test is not required for gaseous-fueled vehicles.

(b) The test vehicle shall be soaked for not less than 6 hours nor more than 36 hours between the end of the hot soak test and the start of the diurnal emission test. For at least the last 6 hours of this period, the vehicle shall be soaked at 72±3 °F. The temperature tolerance may be waived for up to 10 minutes to allow purging of the enclosure or transporting the vehicle into the enclosure at the beginning of the diurnal emission test.

(c) The test vehicle shall be exposed to ambient temperatures cycled according to the profile specified in § 86.1233 and appendix II of this part.

(1) Temperatures measured with the underbody temperature sensor shall follow the profile with a maximum deviation of 3 °F at any time and an average temperature deviation not to exceed 2 °F, where the average deviation is calculated using the absolute value of each measured deviation. In addition, the temperature from the sidewall temperature sensors shall follow the profile with a maximum deviation of 5 °F at any time.

(2) Ambient temperatures shall be measured at least every minute. Temperature cycling shall begin when time=0 minutes, as specified in paragraph (i)(5) of this section.

(d) The diurnal enclosure shall be purged for several minutes prior to the test. WARNING: If at any time the concentration of hydrocarbons, of methanol or of methanol and hydrocarbons exceeds 15,000 ppm C the enclosure should be immediately purged. This concentration provides at least a 4:1 safety factor against the lean flammability limit.

(e) The test vehicle, with the engine shut off and the test vehicle windows and luggage compartment(s) opened, shall be moved into the diurnal enclosure.

(f)–(g) [Reserved]

(h) Prior to sampling for emissions and throughout the period of cycled ambient temperatures, the mixing fan(s) shall circulate the air at a rate of 0.8±0.2 cfm per cubic foot of ambient volume. The mixing fan(s), plus any additional fans if needed, shall also maintain a minimum wind speed of 5 mph (8 km/hr) under the fuel tank of the test vehicle. The Administrator may adjust fan speed and location to ensure sufficient air circulation around the fuel tank. The wind speed requirement may be satisfied by consistently using a fan configuration that has been demonstrated to maintain a broad 5-mph air flow in the vicinity of the vehicle's fuel tank, subject to verification by the Administrator.

(i) Emission sampling may begin as follows:

(1) The FID (or HFID) hydrocarbon analyzer shall be zeroed and spanned immediately prior to the sampling.

(2) Impingers charged with known volumes of pure deionized water shall be placed in the methanol sampling system (methanol-fueled vehicles only).

(3) Turn off purge blowers (if not already off).

(4) Close and seal enclosure doors (if not already closed and sealed).

(5) Within 10 minutes of closing and sealing the doors, analyze enclosure atmosphere for hydrocarbons and record. This is the initial (time=0 minutes) hydrocarbon concentration, C_{HCi}, required in § 86.1243. Hydrocarbon emissions may be sampled continuously during the test period.

(6) Analyze the enclosure atmosphere for methanol, if applicable, and record. The methanol sampling must start simultaneously with the initiation of the hydrocarbon analysis and continue for 4.0±0.5 minutes. This is the initial methanol concentration, C_{CH_3OHi}, required in § 86.1243. Record the time elapsed during this analysis. If the 4-minute sample period is inadequate to

collect a sample of sufficient concentration to allow accurate GC analysis, rapidly collect the methanol sample in a bag and then bubble the bag sample through the impingers at the specified flow rate. The time elapsed between collection of the bag sample and flow through the impingers should be minimized to prevent any losses. If the test is conducted in a fixed-volume enclosure that allows airflow into and out of the enclosure, the effect of makeup air dilution must be factored into the analysis.

(j) If testing indicates that a vehicle design may result in fuel temperature responses during enclosure testing that are not representative of in-use summertime conditions, the Administrator may adjust air circulation and temperature during the test as needed to ensure that the test sufficiently duplicates the vehicle's in-use experience.

(k) The FID (or HFID) hydrocarbon analyzer shall be zeroed and spanned immediately prior to the end of each emission sampling period.

(l) Fresh impingers shall be installed in the methanol collection system immediately prior to the end of each emission measurement, if applicable.

(m) The end of the first, second, and third emission sampling period shall occur 1440±6, 2880±6, 4320±6 minutes, respectively, after the beginning of the initial sampling, as specified in paragraph (i)(5) of this section.

(1) At the end of each emission sampling period, analyze the enclosure atmosphere for hydrocarbons and record. This is the final hydrocarbon concentration, C_{HCf}, required in § 86.1243. The emission measurement at the end of each period becomes the initial hydrocarbon concentration, C_{HCi}, of the next emission sampling period.

(2) Analyze the enclosure atmosphere for methanol, if applicable, and record. The methanol sampling must start simultaneously with the initiation of the hydrocarbon analysis and continue for 4.0±0.5 minutes. This is the final (time=1440 minutes) methanol concentration, C_{CH_3OHf}, required in § 86.1243. Record the time elapsed during this analysis. If the 4-minute sample period is inadequate to collect a sample of sufficient concentration to allow accurate GC analysis, rapidly collect the methanol sample in a bag and then bubble the bag sample through the impingers at the specified flow rate. The time elapsed between collection of the bag sample and flow through the impingers should be minimized to prevent any losses. If the test is conducted in a fixed-volume enclosure that allows airflow into and out of the enclosure, the effect of makeup air dilution must be factored into the analysis.

(n) At the end of the temperature cycling period the enclosure doors shall be unsealed and opened, the test vehicle windows and luggage compartments may be closed and the test vehicle, with the engine shut off, shall be removed from the enclosure.

(o) This completes the full three-diurnal evaporative emission test sequence described in § 86.1230–96.

(p) For the supplemental two-diurnal test sequence described in § 86.1230–96, the following steps shall be performed in lieu of the steps described in paragraphs (b) through (n) of this section.

(1) For the supplemental two-diurnal test sequence, the test vehicle shall be soaked for not less than 6 hours nor more than 36 hours between the end of the hot soak test described in § 86.1238–96(k), and the start of the two-diurnal emission test. For at least the last 6 hours of this period, the vehicle shall be soaked at 72±3 °F.

(2) The vehicle shall be tested for diurnal emissions according to the procedures specified in paragraphs (c) through (n) of this section, except that the test includes only two 24-hour periods. Therefore the end of the first and second emission sampling periods shall occur 1440±6 and 2880±6 minutes, respectively, after the initial sampling.

(3) This completes the supplemental two-diurnal test sequence for evaporative emission measurement.

[58 FR 16057, Mar. 24, 1993; 59 FR 48524, Sept. 21, 1994, as amended at 60 FR 43905, Aug. 23, 1995]

§ 86.1234–96 Running loss test.

(a) *Overview*. Gasoline- and methanol-fueled vehicles are to be tested for running loss emissions during simulated high-temperature urban driving; this test is not required for gaseous-fueled vehicles. During operation, tank temperatures are controlled according to a

prescribed profile to simulate in-use conditions. If the vehicle is determined to have exceeded the standard before the end of the running loss test, the test may be terminated without invalidating the data. The test can be run either in a sealed enclosure or with the point-source method, as specified in paragraph (g) of this section. Measurement of vapor temperature is optional during the running loss test; however, if testing by the Administrator shows that a vehicle has exceeded an emission standard without measurement of vapor temperatures, the manufacturer may, utilizing its own resources, conduct subsequent testing on that vehicle to determine if the exceedance is attributable to inadequate control of vapor temperatures.

(b) *Driving schedule.* Conduct the running loss test by operating the test vehicle through three driving schedules (see § 86.1215 and appendix I of this part). Fifteen seconds after the engine starts, place the transmission in gear. Twenty seconds after the engine starts, begin the initial vehicle acceleration of the driving schedule. The transmission shall be operated according to the specifications of § 86.1228 during the driving cycles.

(c) *Dynamometer operation.* (1) The exhaust from the vehicle must be routed outside the test cell or enclosure. Exhaust gases may, but need not, be collected and sampled.

(2) Provisions of § 86.1235–85(c) shall apply.

(3) Practice runs over the prescribed driving schedule may not be performed at test point.

(4) Provisions of § 86.1235–85 (e) and (f) shall apply.

(5) If the dynamometer horsepower must be adjusted manually, it shall be set within 1 hour prior to the running loss test phase. The test vehicle shall not be used to make this adjustment. Dynamometers using automatic control of preselectable power settings may be set any time prior to the beginning of the emissions test.

(6) Dynamometer roll or shaft revolutions shall be used to determine the actual driving distance for the running loss test, D_{RL}, required in § 86.1243. The revolutions shall be measured on the same roll or shaft used for measuring the vehicle's speed.

(7) Provisions of § 86.1235–85(i) shall apply.

(8) The test run may be stopped if a warning light or gauge indicates that the vehicle's engine coolant has overheated.

(d) *Engine starting and restarting.* (1) Provisions of § 86.1236–85(a) shall apply.

(2) If the vehicle does not start after the manufacturer's recommended cranking time (or 10 continuous seconds in the absence of a manufacturer's recommendation), cranking shall cease for the period recommended by the manufacturer (or 10 seconds in the absence of a manufacturer's recommendation). This may be repeated for up to three start attempts. If the vehicle does not start after three attempts, the reason for failure to start shall be determined. If failure to start is an operational error, the vehicle shall be rescheduled for testing, starting with the soak period immediately preceding the running loss test.

(3) If failure to start is caused by a vehicle malfunction, corrective action of less than 30 minutes duration may be taken (according to § 86.090–25), and the test continued, provided that the ambient conditions to which the vehicle is exposed are maintained at 95±5 °F (35±3 °C). When the engine starts, the timing sequence of the driving schedule shall begin. If failure to start is caused by vehicle malfunction and the vehicle cannot be started, the test shall be voided, the vehicle removed from the dynamometer, and corrective action may be taken according to § 86.090–25. The reason for the malfunction (if determined) and the corrective action taken shall be reported to the Administrator.

(4) Provisions of § 86.1236–85(b) shall apply.

(e) *Pressure checks.* No pressure checks of the evaporative system shall be allowed. Under no circumstances will any changes/repairs to the evaporative emissions control system be allowed.

(f) *Temperature stabilization.* Immediately after the hot transient exhaust emission test, the vehicle shall be soaked in a temperature controlled area for a maximum of 6 hours until

the fuel temperature is stabilized. The fuel may be heated or cooled to stabilize fuel temperatures, but the fuel heating rate must not exceed 5 °F in any 1-hour interval during the soak period. A manufacturer may use a faster heating rate or a longer period for stabilizing fuel temperatures if the needed heating cannot be easily accomplished in the 6-hour period, subject to Administrator approval.

(1) Fuel temperatures must be held at 95±3 °F for at least one hour before the start of the running loss test.

(2) If a vehicle's fuel temperature profile has an initial temperature lower than 95 °F, as described in § 86.1229–85(d)(7)(v), the fuel in the test vehicle must be stabilized to within 3 °F of that temperature for at least one hour before the start of the running loss test.

(g) *Running loss test.* The running loss test may be conducted either by the enclosure method, or by the point-source method.

(1) *Enclosure method.* (i) The running loss enclosure shall be purged for several minutes immediately prior to the test. WARNING: If at any time the concentration of hydrocarbons, of methanol, or of methanol and hydrocarbons exceeds 15,000 ppm C the enclosure should be immediately purged. This concentration provides at least a 4:1 safety factor against the lean flammability limit.

(ii) The FID hydrocarbon analyzer shall be zeroed and spanned immediately prior to the test.

(iii) If not already on, the running loss enclosure mixing fan(s) shall be turned on at this time. Throughout the test, the mixing fan(s) shall circulate the air at a rate of at least 1.0 cfm per cubic foot of ambient volume.

(iv) The test vehicle, with the engine off, shall be moved onto the dynamometer in the running loss enclosure. The vehicle engine compartment cover shall be unlatched, but closed as much as possible, allowing for the air intake equipment specified in paragraph (g)(1)(vii) of this section. The vehicle engine compartment cover may be closed if alternate routing is found for the air intake equipment. Any windows, doors, and luggage compartments shall be closed. A window may be opened to direct cooling air into the passenger compartment of the vehicle, if the vehicle is not equipped with its own air conditioning.

(v) Fans shall be positioned as described in §§ 86.1207–96 (d) and (h).

(vi) The vehicle air conditioning system (if so equipped) shall be set to the ''normal'' air conditioning mode and adjusted to the minimum discharge air temperature and high fan speed. Vehicles equipped with automatic temperature controlled air conditioning systems shall be set to operate in ''automatic'' temperature and fan modes with the system set at 72 °F.

(vii) Connect the air intake equipment to the vehicle, if applicable. This connection shall be made to minimize leakage.

(viii) The temperature and pressure recording systems shall be started. Measurement of vapor temperature is optional during the running loss test. If vapor temperature is not measured, fuel tank pressure need not be measured.

(ix) Turn off purge blowers (if not already off).

(x) The temperature of the liquid fuel shall be monitored and recorded at least every 15 seconds with the temperature recording system specified in § 86.1207–96(e).

(xi) Close and seal the enclosure doors.

(xii) When the ambient temperature is 95±5 °F (35±3 °C) and the fuel has been stabilized according to paragraph (f) of this section, the running loss test may begin. Measure the initial ambient temperature and pressure.

(A) Analyze enclosure atmosphere for hydrocarbons and record. This is the initial (time=0 minutes) hydrocarbon concentration, C_{HCi}, required in § 86.1243. Hydrocarbon emissions may be sampled continuously during the test period.

(B) Analyze the enclosure atmosphere for methanol, if applicable, and record. The methanol sampling must start simultaneously with the initiation of the hydrocarbon analysis and continue for 4.0±0.5 minutes. This is the initial (time=0 minutes) methanol concentration, C_{CH_3OHi}, required in § 86.1243. Record the time elapsed during this analysis. If the 4-minute sample period

is inadequate to collect a sample of sufficient concentration to allow accurate GC analysis, rapidly collect the methanol sample in a bag and then bubble the bag sample through the impingers at the specified flow rate. The time elapsed between collection of the bag sample and flow through the impingers should be minimized to prevent any losses.

(xiii) Start the engine and begin operation of the vehicle over the drive cycle specified in paragraph (b) of this section.

(xiv) The ambient temperature shall be maintained at 95±5 °F (95±2 °F on average) during the running loss test, measured at the inlet to the cooling fan in front of the vehicle; it shall be recorded at least every 60 seconds.

(xv) The fuel temperature during the dynamometer drive shall be controlled to match the fuel tank temperature profile determined in § 86.1229. Measured fuel temperatures must be within ±3 °F of the target profile throughout the test run. Vapor temperatures, if measured, must be within ±5 °F of the target profile during the first 4186 seconds of the running loss test, and within ±3 °F for the remaining 120 seconds of the test run. For any vehicle complying with the test standards, vapor temperatures may be higher than the specified tolerances without invalidating test results. For testing by the Administrator, vapor temperatures may be lower than the specified tolerances without invalidating test results. If the test vehicle has more than one fuel tank, the temperatures for both fuel tanks shall follow the target profiles determined in § 86.1229. The control system shall be tuned and operated to provide smooth and continuous tank temperature profiles that are representative of the on-road profiles.

(xvi) Tank pressure shall not exceed 10 inches of water at any time during the running loss test unless a pressurized system is used and the manufacturer demonstrates that vapor would not be vented to the atmosphere upon fuel cap removal. A vehicle may exceed the pressure limit for temporary periods during the running loss test, up to 10 percent of the total driving time, provided that the vehicle has demonstrated conformance with the pressure limit during the entire outdoor driving period specified in § 86.1229. Measurement of fuel tank pressures will be considered valid only if vapor temperatures are measured and controlled to the tolerances specified in paragraph (g)(1)(xv) of this section.

(xvii) The FID (or HFID) hydrocarbon analyzer shall be zeroed and spanned immediately prior the end of the test.

(xviii) Fresh impingers shall be installed in the methanol collection system immediately prior to the end of the test, if applicable.

(xix) The running loss test ends with the completion of the third 2-minute idle period.

(xx) At the end of the running loss test:

(A) Analyze the enclosure atmosphere for hydrocarbons and record. This is the final hydrocarbon concentration, C_{HCf}, required in § 86.1243.

(B) Analyze the enclosure atmosphere for methanol, if applicable, and record. The methanol sampling must start prior to the end of the test and continue for 4.0±0.5 minutes. The methanol sampling must be completed within 2 minutes after the end of the running loss test. This is the final methanol concentration, C_{CH_3OHf}, required in § 86.1243. Record the time elapsed during this analysis. If the 4-minute sample period is inadequate to collect a sample of sufficient concentration to allow accurate GC analysis, rapidly collect the methanol sample in a bag and then bubble the bag sample through the impingers at the specified flow rate. The time elapsed between collection of the bag sample and flow through the impingers should be minimized to prevent any losses.

(C) Turn off all the fans specified in § 86.1207–96(d). Also, the time that the vehicle's engine compartment cover is open for removal of air intake equipment, if applicable, shall be minimized to avoid loss of heat from the engine compartment.

(xxi) Turn off any CVS apparatus (if not already turned off).

(2) *Point-source method.* (i) The test vehicle, with the engine off, shall be moved onto the dynamometer. The vehicle engine compartment cover and any windows, doors, and luggage compartments shall be closed.

(ii) Fans shall be positioned as described in §§ 86.1235–85(b) and 86.1207–96(d).

(iii) The running loss vapor vent collection system shall be properly positioned at the potential fuel vapor vents or leaks of the vehicle's fuel system. Typical vapor vents for current fuel systems are the ports of the evaporative emission canister and the pressure relief vent of the fuel tank (typically integrated into the fuel tank cap).

(iv) The running loss vapor vent collection system may be connected to a PDP-CVS or CFV-CVS bag collection system. Otherwise, running loss vapors shall be sampled continuously with analyzers meeting the requirements of § 86.1207–96(b).

(v) Fans shall be positioned as described in § 86.1207–96(d).

(vi) The vehicle air conditioning system (if so equipped) shall be set to the ''normal'' air conditioning mode and adjusted to the minimum discharge air temperature and high fan speed. Vehicles equipped with automatic temperature controlled air conditioning systems shall be set to operate in ''automatic'' temperature and fan modes with the system set at 72 °F.

(vii) The temperature and pressure recording systems shall be started. Measurement of vapor temperature is optional during the running loss test. If vapor temperature is not measured, fuel tank pressure need not be measured.

(viii) The temperature of the liquid fuel shall be monitored and recorded at least every 15 seconds with the temperature recording system specified in § 86.1207–96(e).

(ix) When the ambient temperature is 95±5 °F (35±3 °C) and the fuel tank temperature is 95±3 °F the running loss test may begin.

(x) The ambient temperature shall be maintained at 95±5 °F (95±2 °F on average) during the running loss test, measured at the inlet to the cooling fan in front of the vehicle; it shall be recorded at least every 60 seconds.

(xi) Fuel temperatures shall be controlled according to the specifications of paragraph (g)(1)(xv) of this section.

(xii) The tank pressure requirements described in paragraph (g)(1)(xvi) of this section apply also to running loss testing by the point source method.

(xiii) The running loss test ends with completion of the third 2-minute idle period.

(xiv) If emissions are collected in bags, the sample bags must be analyzed within 20 minutes of their respective sample collection phases, as described in § 86.137–94(b)(15). The results of the analysis are used in § 86.1243 to calculate the mass of hydrocarbons emitted.

(xv) At the end of the running loss test, turn off all the fans specified in § 86.1207–96(d).

(3) With prior approval of the Administrator, manufacturers may use an alternative running loss test procedure, provided the alternative test procedure is shown to yield equivalent or superior emission results (in terms of quality control, accuracy and repeatability) for the running loss, hot soak and diurnal portions of the three diurnal-plus-hot-soak test sequence. Additionally, the Administrator may conduct certification and in-use testing using the test procedures outlined in paragraph (g)(1) of this section, paragraph (g)(2) of this section or the alternative running loss test procedure as approved for a specific vehicle.

(h) Following the completion of the running loss drive, the vehicle may be tested for hot soak emissions as specified in § 86.1238–96.

[58 FR 16059, Mar. 24, 1993, as amended at 59 FR 48524, Sept. 21, 1994; 60 FR 43905, Aug. 23, 1995; 65 FR 59958, Oct. 6, 2000; 70 FR 72928, Dec. 8, 2005]

§ 86.1235–85 Dynamometer procedure.

(a) The dynamometer run consists of one HDV urban dynamometer driving schedule cycle starting within one hour after completion of the diurnal loss test. This run includes engine startup (with all accessories turned off) and operation over the driving schedule.

(b) During dynamometer operation, one or more cooling fans shall be positioned so as to direct cooling air to the vehicle in an appropriate manner. The engine compartment cover shall be closed. If, however, the manufacturer can show that the engine compartment cover must be open to provide a test representative of field operation, the

Administrator will allow the engine cover to be open. In the case of vehicles with front engine compartments, the fan(s) shall be squarely positioned within 12 inches of the vehicle. In the case of vehicles with rear engine compartments (or if special designs make the above impractical), the cooling fan(s) shall be placed in a position to provide sufficient air to maintain vehicle cooling. The fan capacity shall normally not exceed 10,600 (cfm (5.0 m^3/s)). If, however, the manufacturer can show that during field operation the vehicle receives additional cooling, and that such additional cooling is needed to provide a representative test, the fan capacity may be increased or additional fans used.

(c) The vehicle speed as measured from the dynamometer rolls shall be used.

(d) Practice runs over the prescribed driving schedule may be performed at test points, provided emissions are not measured, for the purpose of finding the minimum throttle action to maintain the proper speed-time relationship, or to permit test procedure adjustments.

NOTE: When using two-roll dynamometers a truer speed-time trace may be obtained by minimizing the rocking of the vehicle in the rolls. The rocking of the vehicle changes the tire rolling radius on each roll. This rocking may be minimized by restraining the vehicle horizontally (or nearly so) by using a cable and winch, or chain.

(e) Drive wheel tires shall be inflated to the maximum gauge pressure recommended to the ultimate purchaser. If drive wheel tires have a maximum recommended inflation gauge pressure of less than 45 psi (310 kPa), they may be inflated up to a gauge pressure of 45 psi (310 kPa) in order to prevent tire damage. The drive wheel tire pressure shall be recorded with the test results.

(f) If the dynamometer has not been operated during the 2-hour period immediately preceding the test it shall be warmed up for 15 minutes by operating at 30 mph (48 km/h) using a non-test vehicle or as recommended by the dynamometer manufacturer.

(g) If the dynamometer horsepower must be adjusted manually, the power shall be set within 1 hour prior to dynamometer operation preceding the hot soak test. The test vehicle shall not be used to make the adjustment.

(h) If the dynamometer horsepower is selected by automatic control, the power may be set anytime prior to the beginning of the driving cycle.

(i) Multiple drive axle vehicles will be tested in one axle drive mode of operation. Full time multiple drive axle vehicles will have all but one axle temporarily disengaged by the vehicle manufacturer. Multiple drive axle vehicles which can be manually shifted to a one axle drive mode will be tested in the one axle drive mode of operation, unless this would pose a safety hazard, in which case all but one axle will be temporarily disengaged by the vehicle manufacturer.

§ 86.1235–96 Dynamometer procedure.

Section 86.1235–96 includes text that specifies requirements that differ from § 86.1235–85. Where a paragraph in § 86.1235–85 is identical and applicable to § 86.1235–96, this may be indicated by specifying the corresponding paragraph and the statement ''[Reserved]. For guidance see § 86.1235–85.''

(a) The dynamometer run consists of one dynamometer driving schedule cycle (see § 86.1215 and appendix I of this part) starting not less than 12 nor more than 36 hours after completion of the drive specified in § 86.1232–96. This run includes engine startup (with all accessories turned off) and operation over the driving schedule.

(b) through (i) [Reserved]. For guidance see § 86.1235–85.

[58 FR 16060, Mar. 24, 1993, as amended at 65 FR 59958, Oct. 6, 2000]

§ 86.1236–85 Engine starting and restarting.

(a) *Starting.* (1) The engine shall be started (including choke operation) according to the manufacturers recommended starting procedures in the owner's manual. The initial idle period shall begin when the engine starts.

(2) The operator may use the choke, accelerator pedal, etc., where necessary to keep the engine running.

(3) If the manufacturer's operating instructions in the owner's manual do not specify a warm engine starting procedure, the engine shall be started by depressing the accelerator pedal about

half way and cranking the engine until it starts.

(4) If the vehicle does not start after the manufacturer's recommended cranking time (or 10 continuous seconds in the absence of a manufacturer's recommendation), cranking shall cease for the period recommended by the manufacturer (or 10 seconds in the absence of a manufacturer's recommendation). This may be repeated for up to three start attempts. If the vehicle does not start after three attempts, the reason for failure to start shall be determined. If failure to start is an operational error, the vehicle shall be rescheduled for the dynamometer run. If failure to start is caused by a vehicle malfunction, corrective action of less than 30 minutes duration may be taken, and the test continued. When the engine starts, the driving schedule timing sequence shall begin. If failure to start is caused by vehicle malfunction and the vehicle cannot be started, the test shall be voided, the vehicle removed from the dynamometer, and corrective action may be taken. The reasons for the malfunction (if determined) and the corrective action taken shall be recorded.

(b) *Stalling*. (1) If the engine stalls during an idle period, the engine shall be restarted immediately and the driving schedule continued. If the engine cannot be started soon enough to allow the vehicle to follow the next acceleration as prescribed, the driving schedule indicator shall be stopped. When the vehicle restarts, the driving schedule indicator shall be reactivated.

(2) If the engine stalls during some operating mode other than idle, the driving schedule indicator shall be stopped, the vehicle shall then be restarted and accelerated to the speed required at that point in the driving schedule and the driving schedule continued. During acceleration to this point, shifting shall be performed in accordance with § 86.1228–85.

(3) If the vehicle will not restart within one minute, the test shall be voided, the vehicle removed from the dynamometer, corrective action taken, and the vehicle rescheduled for testing. The reason for the malfunction (if determined) and the corrective action taken shall be recorded.

[48 FR 1456, Jan. 12, 1983, as amended at 58 FR 16060, Mar. 24, 1993]

§ 86.1237–85 Dynamometer runs.

(a) The vehicle shall be either driven or pushed onto the dynamometer; however, if driven, the period of engine operation between the end of the diurnal loss test and beginning of the hot soak preparation run shall not exceed 3 minutes, and the vehicle shall be driven at minimum throttle. The dynamometer run shall follow the diurnal heat build by not more than one hour. The vehicle shall be stored prior to dynamometer operation in such a manner that it is not exposed to precipitation (e.g., rain or dew).

(b) The following steps shall be taken for the dynamometer run:

(1) Place drive wheels of vehicle on the dynamometer.

(2) Position the cooling fan(s).

(3) Attach an exhaust tube to the vehicle tailpipe(s).

(4) Start the engine.

(5) Turn on the cooling fan(s).

(6) Operate the vehicle according to the dynamometer driving schedule (§ 86.1215–85).

(7) At the end of the last deceleration, disconnect the exhaust tube from the vehicle tailpipe(s) and drive vehicle from the dynamometer.

§ 86.1237–96 Dynamometer runs.

Section 86.1237–96 includes text that specifies requirements that differ from § 86.1237–85. Where a paragraph in § 86.1237–85 is identical and applicable to § 86.1237–96, this may be indicated by specifying the corresponding paragraph and the statement ''[Reserved]. For guidance see § 86.1237–85.''

(a) The vehicle shall be either driven or pushed onto the dynamometer; however, if driven, the total time of engine operation during the 12 to 36 hour soak period shall not exceed 3 minutes, and the vehicle shall be driven at minimum throttle. The vehicle shall be stored prior to dynamometer operation in such a manner that it is not exposed to precipitation (e.g., rain or dew).

(b) [Reserved]. For guidance see § 86.1235–85.

[58 FR 16061, Mar. 24, 1993]

§ 86.1238–90 Hot soak test.

The one-hour hot-soak evaporative emission test shall be conducted immediately following one cycle of the dynamometer driving schedule.

(a) Prior to the completion of the dynamometer cycle, the evaporative emission enclosure shall be purged for several minutes.

(b) The FID hydrocarbon analyzer shall be zeroed and spanned immediately prior to the test.

(c) Fresh impingers shall be installed in the methanol sample collection system immediately prior to the start of the test, if applicable.

(d) If not already on, the evaporative enclosure mixing fan(s) shall be turned on at this time.

(e) Upon completion of the dynamometer run the exhaust tube shall be disconnected from the vehicle tailpipe(s), the cooling fan(s) shall be moved, and the vehicle shall be disconnected from the dynamometer and driven at minimum throttle to the vehicle entrance of the enclosure.

(f) The vehicle's engine must be stopped before any part of the vehicle enters the enclosure. The vehicle may be pushed or coasted into the enclosure.

(g) The test vehicle windows and any storage compartments shall be opened, if not already open.

(h) The temperature recording system shall be started and the time of engine shut off shall be noted on the evaporative emissions hydrocarbon data recording system.

(i) The enclosure doors shall be closed and sealed within two minutes of engine shutdown and within seven minutes after the end of the exhaust emission test. The steps after the end of the driving cycle should be done as quickly as possible to minimize the time needed to start the hot soak test.

(j) The 60±0.5 minute hot soak begins when the enclosure doors are sealed. The enclosure atmosphere shall be analyzed and recorded. This is the initial (time = 0 minutes) hydrocarbon concentration, C_{HCi}, for use in calculating evaporative losses (*see* § 86.1243). The ''zero'' time methanol sample shall be collected starting at the same time as the hydrocarbon analysis is started. Sampling shall continue for four minutes.

(k) The test vehicle shall be permitted to soak for a period of one hour in the enclosure.

(l) The FID hydrocarbon analyzer shall be zeroed and spanned immediately prior to the end of the test.

(m) Fresh impingers shall be installed in the methanol collection system immediately prior to the end of the test, if applicable.

(n) At the end of the 60±0.5 minute test period, the enclosure atmosphere shall again be analyzed (as described in § 86.1238–90(j) and the time recorded. This is the final (time = 60 minutes) hydrocarbon concentration, C_{HCf} and the final methanol level for use in calculating evaporative losses (*see* § 86.1243). This operation completes the evaporative emission measurement procedure.

(o) *Alternate method for methanol sampling.* Since sample times of longer than four minutes may be necessary in order to collect an adequate and representative sample of methanol at the end of a test (when SHED concentrations are usually increasing rapidly), it may be necessary to rapidly collect the methanol sample in a bag and then bubble the bag sample through the impingers at the specified flow rate. The time elapsed between collection of the bag sample and flowing through the impingers should be minimized in order to prevent any losses. This alternative must be adopted if the four minute sample period is inadequate to collect a sample of sufficient concentration to allow accurate GC analysis.

[54 FR 14569, Apr. 11, 1989, as amended at 58 FR 16061, Mar. 24, 1993; 60 FR 43906, Aug. 23, 1995]

§ 86.1238–96 Hot soak test.

(a)(1) *Gasoline- and methanol-fueled vehicles.* For gasoline- and methanol-fueled vehicles, the hot soak test shall be conducted immediately following the running loss test. However, sampling of emissions from the running loss test is not required as preparation for the hot soak test.

(2) *Gaseous-fueled vehicles.* Since gaseous-fueled vehicles are not required to perform a running loss test, the hot soak test shall be conducted within seven minutes after completion of the hot start exhaust test.

(b) The hot soak test may be conducted in the running loss enclosure as a continuation of that test or in a separate enclosure.

(1) If the hot soak test is conducted in the running loss enclosure, the driver may exit the enclosure after the running loss test. If exiting, the driver should use the personnel door described in § 86.1207–96(a)(2), exiting as quickly as possible with a minimum disturbance to the system. The final hydrocarbon and methanol concentration for the running loss test, measured in § 86.1234–96(g)(1)(xx), shall be the initial hydrocarbon and methanol concentration (time=0 minutes) C_{HCi} and C_{CH_3OHi}, for the hot soak test.

(2) If the vehicle must be moved to a different enclosure, the following steps must be taken:

(i) The enclosure for the hot soak test shall be purged for several minutes prior to completion of the running loss test. WARNING: If at any time the concentration of hydrocarbons, of methanol, or of methanol and hydrocarbons exceeds 15,000 ppm C the enclosure should be immediately purged. This concentration provides at least a 4:1 safety factor against the lean flammability limit.

(ii) The FID hydrocarbon analyzer shall be zeroed and spanned immediately prior to the test.

(iii) Fresh impingers shall be installed in the methanol sample collection system immediately prior to the start of the test, if applicable.

(iv) If not already on, the mixing fan(s) shall be turned on at this time. Throughout the hot soak test, the mixing fan(s) shall circulate the air at a rate of 0.8±0.2 cfm per cubic foot of the nominal enclosure volume.

(v) Begin sampling as follows:

(A) Analyze the enclosure atmosphere for hydrocarbons and record. This is the initial (time = 0 minutes) hydrocarbon concentration, C_{HCi}, required in § 86.1243. Hydrocarbon emissions may be sampled continuously during the test period.

(B) Analyze the enclosure atmosphere for methanol, if applicable, and record. The methanol sampling must start simultaneously with the initiation of the hydrocarbon analysis and continue for 4.0±0.5 minutes. This is the initial (time=0 minutes) methanol concentration, C_{CH_3OHi}, required in § 86.1243. Record the time elapsed during this analysis. If the 4-minute sample period is inadequate to collect a sample of sufficient concentration to allow accurate GC analysis, rapidly collect the methanol sample in a bag and then bubble the bag sample through the impingers at the specified flow rate. The time elapsed between collection of the bag sample and flow through the impingers should be minimized to prevent any losses.

(vi) The vehicle engine compartment cover shall be closed (if not already closed), the cooling fan shall be moved, the vehicle shall be disconnected from the dynamometer and any sampling system, and then driven at minimum throttle to the enclosure for the hot soak test. These steps should be done as quickly as possible to minimize the time needed to start the hot soak test.

(vii) The vehicle's engine must be stopped before any part of the vehicle enters the enclosure.

(viii) The vehicle shall enter the enclosure; the enclosure doors shall be closed and sealed within 2 minutes of engine shutdown and within seven minutes after the end of the running loss test.

(ix) The test vehicle windows and any luggage compartments shall be opened (if not already open). The vehicle engine compartment cover shall be closed (if not already closed).

(c) [Reserved]

(d) The temperature recording system shall be started and the time of engine shutoff shall be noted on the evaporative emission hydrocarbon data recording system.

(e) For the first 5 minutes of the hot soak test, the ambient temperature shall be maintained at 95±10 °F. For the remainder of the hot soak test, the ambient temperature shall be maintained at 95±5 °F (95±2 °F on average).

(f) The 60±0.5 minute hot soak begins when the enclosure doors are sealed (or when the running loss test ends, if the

hot soak test is conducted in the running loss enclosure).

(g) The FID (or HFID) hydrocarbon analyzer shall be zeroed and spanned immediately prior to the end of the test.

(h) Fresh impingers shall be installed in the methanol collection system immediately prior to the end of the test, if applicable.

(i) [Reserved]

(j) At the end of the 60±0.5 minute test period:

(1) Analyze the enclosure atmosphere for hydrocarbons and record. This is the final (time=60 minutes) hydrocarbon concentration, C_{HCf}, required in § 86.1243.

(2) Analyze the enclosure atmosphere for methanol and record, if applicable. The methanol sampling must start simultaneously with the initiation of the hydrocarbon analysis and continue for 4.0±0.5 minutes. This is the final (time=60 minutes) methanol concentration, C_{CH_3OHf}, required in § 86.1243. Record the time elapsed during this analysis. If the 4-minute sample period is inadequate to collect a sample of sufficient concentration to allow accurate GC analysis, rapidly collect the methanol sample in a bag and then bubble the bag sample through the impingers at the specified flow rate. The time elapsed between collection of the bag sample and flow through the impingers should be minimized to prevent any losses.

(k) For the supplemental two-diurnal test sequence (see § 86.1230–96), the hot soak test described in § 86.1238–90 shall be conducted immediately following the dynamometer run. This test requires ambient temperatures between 68° and 86 °F at all times. The equipment and calibration specifications of §§ 86.1207–90 and 86.1207–90 may apply for this testing. Enclosures meeting the requirements of §§ 86.1207–96 and 86.1217–96 may also be used. This hot soak test is followed by two consecutive diurnal heat builds, described in § 86.1233–96(p).

(l) If the vehicle is to be tested for diurnal emissions, follow the procedure outlined in § 86.1233–96.

[58 FR 16061, Mar. 24, 1993, as amended at 59 FR 48524, Sept. 21, 1994; 60 FR 43906, Aug. 23, 1995]

§ 86.1242–90 Records required.

The following information shall be recorded with respect to each test:

(a) Test number.

(b) System or device tested (brief description).

(c) Date and time of day for each part of the test schedule.

(d) Instrument operator.

(e) Driver or operator.

(f) Vehicle: ID number; Manufacturer; Model Year; Engine family; Evaporative emissions family; Basic engine description (including displacement, number of cylinders, and catalyst usage); Engine maximum power rating and rated speed; Fuel system (including number of carburetors, number of carburetor barrels, fuel injection type, fuel tank(s) capacity and location, and number and size (volume and working capacity)) of evaporative control canisters, Engine code; Gross vehicle weight rating; Actual curb weight at zero miles; Actual road load at 50 mph; Transmission configuration; Axle ratio; Vehicle line; Odometer reading; Idle rpm; and Drive wheel tire pressure, as applicable.

(g) Indicated road load power absorption at 50 mph (80 km/hr) and dynamometer serial number. As an alternative to recording the dynamometer serial number, a reference to a vehicle test cell number may be used, provided the test cell records show the pertinent information.

(h) All pertinent instrument information such as tuning, gain, serial number, detector number and range. As an alternative, a reference to a vehicle test cell number may be used, with the advance approval of the Administrator, provided test cell calibration records show the pertinent instrument information.

(i) Recorder charts: Identify zero, span and enclosure gas sample traces.

(j) Test cell barometric pressure and ambient temperature.

NOTE: A central laboratory barometer may be used: *Provided,* That individual test cell barometric pressures are shown to be within ±0.1 percent of the barometric pressure at the central barometer location.

(k) Fuel temperatures as prescribed.

(l) *For methanol-fueled vehicles:* (1) Volume of sample passed through the

methanol sampling system and the volume of deionized water in each impinger.

(2) The concentration of the GC analyses of the test samples (methanol).

(m) *For natural gas-fueled vehicles.* Composition, including all carbon containing compounds; e.g. CO_2. of the natural gas-fuel used during the test. C_1 and C_2 compounds shall be individually reported. C_3 and heavier hydrocarbons, and C_6 and heavier hydrocarbons may be reported as a group.

(n) *For liquefied petroleum gas-fueled vehicles.* Composition of the liquefied petroleum gas-fuel used during the test. Each hydrocarbon compound present, through C_4 compounds, shall be individually reported. C_5 and heavier hydrocarbons may be reported as a group.

[54 FR 14570, Apr. 11, 1989, as amended at 59 FR 48524, Sept. 21, 1994; 60 FR 34363, June 30, 1995]

§ 86.1243–90 Calculations; evaporative emissions.

(a) The calculation of the net hydrocarbon, methanol and hydrocarbon plus methanol mass change in the enclosure is used to determine the diurnal and hot soak mass emissions. The mass changes are calculated from initial and final hydrocarbon and methanol concentrations in ppm carbon, initial and final enclosure ambient temperatures, initial and final barometric pressures, and net enclosure volume using the following equations:

(1) For methanol:

$$M_{CH3OH} = V_n \times \frac{T_{Ef}}{\left(V_E \times T_{SHEDf}\right)} \times \left[\left(C_{MS1f} \times AV_{1f}\right) + \left(C_{MS2f} \times AV_{2f}\right)\right] - \frac{T_{Ei}}{\left(V_E \times T_{SHEDi}\right)} \times \left[\left(C_{MS1i} \times AV_{1i}\right) + \left(C_{MS2i} \times AV_{2i}\right)\right]$$

Where:

(i) M_{CH3OH}=Methanol mass change, μg.

(ii) V_n=Net enclosure volume, ft^3, as determined by subtracting 50 ft^3 (1.42 m^3) (volume of vehicle with trunk and windows open) from the enclosure volume. A manufacturer may use the measured volume of the vehicle (instead of the nominal 50 ft^3) with advance approval by the Administrator: *Provided*, the measured volume is determined and used for all vehicles tested by that manufacturer.

(iii) T_E=Temperature of sample withdrawn, °R.

(iv) V_E=Volume of sample withdrawn, ft^3.

(v) T_{SHED}=Temperature of SHED, °R

(vi) P_B=Barometric pressure at time of sampling, in. Hg.

(vii) C_{MS}=GC concentration of sample.

(viii) AV=Volume of absorbing reagent in impinger.

(ix) i=Initial sample.

(x) f=Final sample.

(xi) 1=First impinger.

(xii) 2=Second impinger.

(2) For hydrocarbons:

$$M_{HC} = \left(kV_n \times 10^{-4}\right)\frac{\left(C_{HCf} - rC_{CH3OHf}\right)P_{Bf}}{T_f} - \frac{\left(C_{HCi} - rC_{CH3OHi}\right)P_{Bi}}{T_i}$$

Where:

(i) M_{HC}=Hydrocarbon mass change, g.

(ii) C_{HC}=FID hydrocarbon concentration as ppm carbon including FID response to methanol in the sample.

(iii) C_{CH23OH}=Methanol concentration as ppm carbon.

$$= \frac{1.501 \times 10^{-3} \times T}{P_B \times V_E} \times \left[\left(C_{S1} \times AV_1 \right) + \left(C_{S2} \times AV_2 \right) \right]$$

(iv) V_n = Net enclosure volume ft³ (m³), as determined by subtracting 50 ft³ (1.42 m³) (volume of vehicle with trunk and windows open) from the enclosure volume. A manufacturer may use the measured volume of the vehicle (instead of the nominal 50 ft³) with advance approval by the Administrator: *Provided*, the measured volume is determined and used for all vehicles tested by that manufacturer.

(v) r = FID response factor to methanol.

(vi) P_B = Barometric pressure, in Hg (kPa).

(vii) T = Enclosure temperature, °R(°K).

(viii) i = initial reading.

(ix) f = final reading.

(x) 1 = First impinger.

(xi) 2 = Second impinger.

(xii)(A) k = 0.208 (12 = H/C).

(B) *For SI units*, k = 1.2 (12 = H/C).

Where:

(xiii) H/C = hydrogen carbon ratio.

(A) H/C = 2.33 for diurnal emissions.

(B) H/C = 2.2 for hot soak emissions.

(3) For total evaporative emissions:

Total Evaporative Emissions =

$$\left(M_{HC} + \frac{14.3594 \times 10^6}{32.042} M_{CH_3OH} \right) + \left(M_{HC} + \frac{14.2284 \times 10^6}{33.042} M_{CH_3OH} \right) g.$$

(b) The final reported results shall be computed by summing the individual evaporative emission results determined for the diurnal breathing-loss test, running-loss test and the hot-soak test.

[54 FR 14570, Apr. 11, 1989, as amended at 60 FR 34363, June 30, 1995]

§ 86.1243–96 Calculations; evaporative emissions.

(a) The following equations are used to calculate the evaporative emissions from gasoline- and methanol-fueled vehicles, and for gaseous-fueled vehicles.

(b) Use the measurements of initial and final concentrations to determine the mass of hydrocarbons and methanol emitted. For testing with pure gasoline, methanol emissions are assumed to be zero.

(1) For enclosure testing of diurnal, hot soak, and running loss emissions:

(i) Methanol emissions:

$$M_{CH_3OH} = V_n \times \left[\frac{\left(C_{MS1f} \times AV_{1f} \right) + \left(C_{MS2f} \times AV_{2f} \right)}{V_{E_f}} \right] - \left[\frac{\left(C_{MS1i} \times AV_{1i} \right) + \left(C_{MS2i} \times AV_{2i} \right)}{V_{E_i}} \right] + \left(M_{CH_3OH,out} - M_{CH_3OH,in} \right)$$

Where:

(A) M_{CH23OH}=Methanol mass change, μg.

(B) VF_n=Net enclosure volume, ft³, as determined by subtracting 50 ft³ (1.42 m³) (volume of vehicle with trunk and windows open) from the enclosure volume. A manufacturer may use the

measured volume of the vehicle (instead of the nominal 50 ft³) with advance approval by the Administrator: Provided, the measured volume is determined and used for all vehicles tested by that manufacturer.

(C) [Reserved]

(D) V_E=Volume of sample withdrawn, ft³. Sample volumes must be corrected for differences in temperature to be consistent with determination of V_n, prior to being used in the equation.

(E) [Reserved]

(F) AC_{MS}=GC concentration of sample.

(G) AV=Volume of absorbing reagent in impinger.

(H) P_B=Barometric pressure at time of sampling, in. Hg.

(I) i=Initial sample.

(J) f=Final sample.

(K) 1=First impinger.

(L) 2=Second impinger.

(M) $M_{CH3OH,out}$=mass of methanol exiting the enclosure, in the case of fixed volume enclosures for diurnal emission testing, µg,

(N) $M_{CH3OH,in}$=mass of methanol entering the enclosure, in the case of fixed volume enclosures for diurnal emission testing, µg,

(ii) Hydrocarbon emissions:

$$M_{HC} = \left(kV_n \times 10^{-4}\right) \times \left(\frac{\left(C_{HC_f} - rC_{CH_3OH_f}\right)P_{B_f}}{T_f} - \frac{\left(C_{HC_i} - rC_{CH_3OH_i}\right)P_{B_i}}{T_i} \right) + M_{HC,out} - M_{HC,in}$$

Where,

(A) M_{HC}=Hydrocarbon mass change, g.

(B) C_{HC}=FID hydrocarbon concentration as ppm carbon including FID response to methanol (or methane, as applicable) in the sample.

(C) C_{CH3OH}=Methanol concentration as ppm carbon.

$$= \frac{1.501 \times 10^{-3} \times T}{P_B \times V_E} \times \left[\left(C_{S1} \times AV_1\right) + \left(C_{S2} \times AV_2\right)\right]$$

(D) V_n=Net enclosure volume ft³ (m³) as determined by subtracting 50 ft³ (1.42 m³) (volume of vehicle with trunk and windows open) from the enclosure volume. A manufacturer may use the measured volume of the vehicle (instead of the nominal 50 ft³) with advance approval by the Administrator, provided the measured volume is determined and used for all vehicles tested by that manufacturer.

(E) r=FID response factor to methanol.

(F) P_B=Barometric pressure, in Hg (Kpa).

(G) T=Enclosure temperature, °R(°K).

(H) i=initial reading.

(I) f=final reading.

(J) 1=First impinger.

(K) 2=Second impinger.

(L) Assuming a hydrogen to carbon ratio of 2.3:

(*1*) k=2.97; and

(*2*) For SI units, k=17.16.

(M) $M_{HC,out}$=mass of hydrocarbons exiting the enclosure, in the case of fixed-volume enclosures for diurnal emission testing, g.

(N) $M_{HC,in}$=mass of hydrocarbons entering the enclosure, in the case of fixed-volume enclosures for diurnal emission testing, g.

(iii) For variable-volume enclosures, defined in § 86.1207(a)(1)(i), the following simplified form of the hydrocarbon mass change equation may be used:

$$M_{HC} = \left(\frac{kP_B V_n \times 10^{-4}}{T}\right) \times \left[\left(C_{HC_f} - rC_{CH_3OH_f}\right) - \left(C_{HC_i} - rC_{CH_3OH_i}\right)\right]$$

(2) For running loss testing by the point-source method, the mass emissions of each test phase are calculated below, then summed for a total mass emission for the running loss test. If emissions are continuously sampled, the following equations can be used in integral form.

(i) Methanol emissions:

$$M_{CH_3OH} = \rho_{CH_3OH}\, V_{mix} \times \left(C_{CH_3OH,rl} - C_{CH_3OH,d}\right)$$

Where,

(A) M_{CH_3OH}=methanol mass change, μg.

(B) ρ_{CH_3OH}= 37.71 g/ft^3, density of pure vapor at 68 °F.

(C) V_{mix}=total dilute sample volume, in ft^3, calculated as appropriate for the collection technique used.

(D) $C_{CH_3OH,rl}$=methanol concentration of diluted running loss sample, in ppm carbon equivalent.

(E) $C_{CH_3OH,d}$=methanol concentration of dilution air, in ppm carbon equivalent.

(ii) Hydrocarbon emissions:

$$M_{HC} = \rho_{HC}\, V_{mix} \times 10^{-6}\left(C_{CH,rl} - C_{HC,d}\right)$$

Where,

(A) M_{HC}=hydrocarbon mass change, g.

(B) ρ_{HC}= 16.88 g/ft^3, density of pure vapor at 68 °F (for hydrogen to carbon ratio of 2.3).

(C) V_{mix}=total dilute sample volume, in ft^3, calculated as appropriate for the collection technique used.

(D) $C_{HC,rl}$=hydrocarbon concentration of diluted running loss sample, in ppm carbon equivalent.

(E) $C_{HC,d}$=hydrocarbon concentration of dilution air, in ppm carbon equivalent.

(c) Calculate the adjusted total mass emissions for each test segment.

(1)
$$M_{DI} = \left(M_{HC} + \frac{14.3594}{32.042} \times 10^{-6} M_{CH_3OH}\right)_{DI}$$

where M_{DI}=mass emissions from the diurnal emission test (see § 86.1233), g.

(2)
$$M_{HS} = \left(M_{HC} + \frac{14.2284}{32.042} \times 10^{-6} M_{CH_3OH}\right)_{HS}$$

where M_{HS}=mass emissions from the hot soak test (see § 86.1238), g.

(3)
$$M_{RL} = \left(M_{HC} + \frac{14.2284}{32.042} \times 10^{-6} M_{CH_3OH} \right)_{RL}$$

where M_{RL}=mass emissions from the running loss test (see § 86.1234), g.

(d)(1) For the full three-diurnal test sequence, there are two final results to report:

(i) The sum of the adjusted total mass emissions for the diurnal and hot soak tests (M_{DI}+M_{HS}); and

(ii) The adjusted total mass emissions for the running loss test, on a grams per mile basis=M_{RL}/D_{RL}, where D_{RL}=miles driven for the running loss test (see § 86.1234–96(c)(6)).

(2) For the supplemental two-diurnal test sequence, there is one final result to report: the sum of the adjusted total mass emissions for the diurnal and hot soak tests (M_{DI}+M_{HS}), described in §§ 86.1233–96(p) and 86.1238–96(k), respectively.

[58 FR 16062, Mar. 24, 1993, as amended at 59 FR 48525, Sept. 21, 1994; 60 FR 34364, June 30, 1995; 60 FR 43906, Aug. 23, 1995]

§ 86.1246–96 Fuel dispensing spitback procedure.

(a) The vehicle is fueled at a rate of 10 gal/min to test for fuel spitback emissions. All liquid fuel spitback emissions that occur during the test are collected in a bag made of a material impermeable to hydrocarbons or methanol. The bag shall be designed and used so that liquid fuel does not spit back onto the vehicle body, adjacent floor, etc., and it must not impede the free flow of displaced gasoline vapor from the orifice of the filler pipe. The bag must be designed to permit passage of the dispensing nozzle through the bag. If the bag has been used for previous testing, sufficient time shall be allowed for the bag to dry out. The dispensing nozzle shall be a commercial model, not equipped with vapor recovery hardware.

(b) Ambient temperature levels encountered by the test vehicle shall be not less than 68 °F nor more than 86 °F. The temperatures monitored during testing must be representative of those experienced by the test vehicle. The vehicle shall be approximately level during all phases of the test sequence to prevent abnormal fuel distribution.

(c) Measure and record the mass of the bag to be used for collecting spitback emissions to the nearest 0.01 gram.

(d) Drain the fuel tank(s) and fill with test fuel, as specified in § 86.1213, to 10 percent of the reported nominal fuel tank capacity. The fuel cap(s) shall be installed immediately after refueling.

(e) The vehicle shall be soaked at 80±6 °F (27±3 °C) for a minimum of six hours, then placed, either by being driven or pushed, on a dynamometer and operated through one dynamometer driving schedule (specified in § 86.1215 and appendix I of this part). The test vehicle may not be used to set the dynamometer horsepower.

(f) Following the preconditioning drive, the vehicle shall be moved or driven at minimum throttle to the refueling area.

(g) All areas in proximity to the vehicle fuel fill orifice and the dispenser nozzle itself shall be completely dry of liquid fuel.

(h) The fuel filler neck shall be snugly fitted with the vented bag to capture any fuel emissions. The fuel nozzle shall be inserted through the bag into the filler neck of the test vehicle to its maximum penetration. The plane of the nozzle's handle shall be perpendicular to the floor of the laboratory.

(i) The fueling procedure consists of dispensing fuel through a nozzle, interrupted by a series of automatic shutoffs. A minimum of 3 seconds shall elapse between any automatic shutoff and subsequent resumption of dispensing. Dispensing may not be manually terminated, unless the test vehicle

has already clearly failed the test. The vehicle shall be fueled according to the following procedure:

(1) The fueling operation shall be started within 4 minutes after the vehicle is turned off and within 8 minutes after completion of the preconditioning drive. The average temperature of the dispensed fuel shall be 65±5 °F (18±3 °C).

(2) The fuel shall be dispensed at a rate of 9.8±0.3 gallons/minute (37.1±1.1 *l*/min) until the automatic shutoff is activated.

(3) If the automatic shutoff is activated before the nozzle has dispensed an amount of fuel equal to 70 percent of the tank's nominal capacity, the dispensing may be resumed at a reduced rate. Repeat as necessary until the nozzle has dispensed an amount of fuel equal to at least 70 percent of the tank's nominal capacity.

(4) Once the automatic shutoff is activated after the nozzle has dispensed an amount of fuel equal to 70 percent of the tank's nominal capacity, the fuel shall be dispensed at a rate of 5±1 gallons/minute (19±4 ℓ/min) for all subsequent dispensing. Dispensing shall be restarted two additional times.

(5) If the nozzle has dispensed an amount of fuel less than 85 percent of the tank's nominal capacity after the two additional dispensing restarts, dispensing shall be resumed, and shall continue through as many automatic shutoffs as necessary to achieve this level. This completes the fueling procedure.

(j) Withdraw the nozzle from the vehicle and the bag, holding the tip of the nozzle upward to avoid any dripping into the bag.

(k) Within 1 minute after completion of the fueling event, the bag shall be folded to minimize the vapor volume inside the bag. The bag shall be folded as quickly as possible to prevent evaporation of collected emissions.

(l) Within 5 minutes after completion of the fueling event, the mass of the bag and its contents shall be measured and recorded (consistent with paragraph (c) of this section). The bag shall be weighed as quickly as possible to prevent evaporation of collected emissions.

[58 FR 16063, Mar. 24, 1993, as amended at 60 FR 43906, Aug. 23, 1995; 65 FR 59958, Oct. 6, 2000]

Subpart N—Emission Regulations for New Otto-Cycle and Diesel Heavy-Duty Engines; Gaseous and Particulate Exhaust Test Procedures

AUTHORITY: Secs. 202, 206, 207, 208, 301(a), Clean Air Act as amended 42 U.S.C. 7521, 7524, 7541, 7542, and 7601.

SOURCE: 48 FR 52210, Nov. 16, 1983, unless otherwise noted.

§ 86.1301 Scope; applicability.

This subpart specifies gaseous emission test procedures for Otto-cycle and diesel heavy-duty engines, and particulate emission test procedures for diesel heavy-duty engines, as follows:

(a) For model years 1990 through 2003, manufacturers must use the test procedures specified in § 86.1305–90.

(b) For model years 2004 through 2009, manufacturers may use the test procedures specified in § 86.1305–2004 or § 86.1305–2010. For any EPA testing before the 2010 model year, EPA will use the manufacturer's selected procedures for mapping engines, generating duty cycles, and applying cycle-validation criteria. For any other parameters, EPA may conduct testing using either of the specified procedures.

(c) For model years 2010 and later, manufacturers must use the test procedures specified in § 86.1305–2010.

(d) As allowed under subpart A of this part, manufacturers may use carryover data from previous model years to demonstrate compliance with emission standards, without regard to the provisions of this section.

[70 FR 40438, July 13, 2005]

§ 86.1302–84 Definitions.

The definitions in § 86.084–2 apply to this subpart.

§ 86.1303–84 Abbreviations.

The abbreviations in § 86.084–3 apply to this subpart.

§ 86.1304 Section numbering; construction.

(a) *Section numbering*. The model year of initial applicability is indicated by the section number. The digits following the hyphen designate the first model year for which a section is applicable. The section continues to apply to subsequent model years unless a later model year section is adopted. (Example: § 86.13xx–2004 applies to the 2004 and subsequent model years. If a § 86.13xx–2007 is promulgated it would apply beginning with the 2007 model year; § 86.13xx–2004 would apply to model years 2004 through 2006.)

(b) A section reference without a model year suffix refers to the section applicable for the appropriate model year.

[65 FR 59958, Oct. 6, 2000. Redesignated and amended at 70 FR 40438, July 13, 2005]

§ 86.1305–90 Introduction; structure of subpart.

(a) This subpart describes the equipment required and the procedures to follow in order to perform exhaust emission tests on Otto-cycle and diesel heavy-duty engines. Subpart A sets forth the testing requirements and test intervals necessary to comply with EPA certification procedures.

(b) Four topics are addressed in this subpart. Sections 86.1306 through 86.1315 set forth specifications and equipment requirements; §§ 86.1316 through 86.1326 discuss calibration methods and frequency; test procedures are listed in §§ 86.1327 through 86.1341; calculation formula are found in § 86.1342; and data requirements are found in § 86.1344.

[54 FR 14571, Apr. 11, 1989]

§ 86.1305–2004 Introduction; structure of subpart.

(a) This subpart describes the equipment required and the procedures to follow in order to perform exhaust emissions tests on Otto-cycle and diesel-cycle heavy duty engines. Subpart A of this part sets forth the emission standards and general testing requirements to comply with EPA certification procedures.

(b) This subpart contains five key sets of requirements, as follows: specifications and equipment needs (§§ 86.1306 through 86.1314); calibration methods and frequencies (§§ 86.1316 through 86.1326); test procedures (§§ 86.1327 through 86.1341 and §§ 86.1360 through 86.1380); calculation formulas (§§ 86.1342 and 86.1343); and data requirements (§ 86.1344).

[65 FR 59958, Oct. 6, 2000]

§ 86.1305–2010 Introduction; structure of subpart.

(a) This subpart specifies the equipment and procedures for performing exhaust-emission tests on Otto-cycle and diesel-cycle heavy-duty engines. Subpart A of this part sets forth the emission standards and general testing requirements to comply with EPA certification procedures.

(b) Use the applicable equipment and procedures for spark-ignition or compression-ignition engines in 40 CFR part 1065 to determine whether engines meet the duty-cycle emission standards in subpart A of this part. Measure the emissions of all regulated pollutants as specified in 40 CFR part 1065. Use the duty cycles and procedures specified in § 86.1333–2007, § 86.1360–2007, and § 86.1362–2007. Adjust emission results from engines using aftertreatment technology with infrequent regeneration events as described in § 86.004–28.

(c) The provisions in § 86.1370–2007 and § 86.1372–2007 apply for determining whether an engine meets the applicable not-to-exceed emission standards.

(d) Measure smoke using the procedures in subpart I of this part for evaluating whether engines meet the smoke standards in subpart A of this part.

(e) Use the fuels specified in 40 CFR part 1065 to perform valid tests, as follows:

(1) For service accumulation, use the test fuel or any commercially available fuel that is representative of the fuel that in-use engines will use.

(2) For diesel-fueled engines, use the ultra low-sulfur diesel fuel specified in 40 CFR part 1065 for emission testing.

(f) You may use special or alternate procedures to the extent we allow them under 40 CFR 1065.10.

(g) This subpart applies to you as a manufacturer, and to anyone who does testing for you.

[70 FR 40438, July 13, 2005]

§ 86.1306–07 Equipment required and specifications; overview.

Section 86.1306–07 includes text that specifies requirements that differ from § 86.1306–96. Where a paragraph in § 86.1306–96 is identical and applicable to § 86.1306–07, this may be indicated by specifying the corresponding paragraph and the statement ''[Reserved]. For guidance see § 86.1306–96.''.

(a) and (b) [Reserved]. For guidance see § 86.1306–96.

(c)(1) Upon request, the Administrator may allow a manufacturer to use some of the test equipment allowed for model year 2006 and earlier engines instead of the test equipment required for model year 2007 and later engines, provided that good engineering judgment indicates that it would not adversely affect determination of compliance with the applicable emission standards of this part.

(2) A manufacturer may use the test equipment required for model year 2007 and later engines for earlier model year engines, provided that good engineering judgment indicates that it would not adversely affect determination of compliance with the applicable emission standards of this part.

(d) Approval of alternate test system. (1) If on the basis of the information described in paragraph (d)(5) of this section, the Administrator determines that an alternate test system would consistently and reliably produce emission test results that are at least equivalent to the results produced using the test systems described in this subpart, he/she shall approve the alternate system for optional use instead of the test systems described in this subpart.

(2) Any person may submit an application for approval of an alternate test system.

(3) In approving an alternate test system, the Administrator may approve it for general use, or may approve it conditionally.

(4) The Administrator may revoke the approval on the basis of new information that indicates that the alternate test system is not equivalent. However, revocation of approval must allow manufacturers sufficient lead-time to change the test system to an approved system. In determining the amount of lead-time that is required, the Administrator will consider relevant factors such as:

(i) The ease with which the test system can be converted to an approved system.

(ii) The degree to which the alternate system affects the measured emission rates.

(iii) Any relevant conditions included in the approval.

(5) The application for approval must include:

(i) *An explanation of the theoretical basis of the alternate system.* This technical description should explain why the detection principle of the alternate system would provide equivalent results to the detection principle of the prescribed system for the full range of emission properties being measured. This description may include equations, figures, and references. For example, a NO_X measurement application should theoretically relate the alternate detection principle to the chemiluminescent detection principle of detecting nitric oxide for a typical range of NO to NO_2 ratios. A PM measurement application should explain the principle(s) by which the alternate system quantifies PM mass independent of PM composition, and how it is impacted by semi-volatile and volatile species= phase distributions. For any proportioning or integrating system, the application should compare the alternate system's theoretical response to the prescribed system's response.

(ii) *A technical description of the alternate system.* This section shall detail all of the hardware and software included in the alternate system. Dimensioned drawings, flow-charts, schematics, and component specifications shall be included. Any data manipulation (*i.e.* calculations) that the system performs shall be presented in this section.

(iii) *A description of the procedures used to operate the system including the level of training that an operator must have to achieve acceptable results.* This

section of the application shall describe all of the installation, calibration, operation, and maintenance procedures in a step-by-step format. Note that empirical calibration with respect to another prescribed or approved measurement system is not acceptable. Calibration should be performed with NIST traceable standards, or equivalent national standards. Diagrams, schematics, and other graphics may be used to enhance the description.

(iv) *A comparison of results from the alternate system and from the prescribed system (or other system approved by the Administrator).* The two systems must be calibrated independently to NIST traceable standards or equivalent national standards for this comparison. While other statistical analyses may be acceptable, it is recommended that the comparison be based on a minimum of 7 collocated and simultaneous tests. This comparison shall be performed over the ''hot-start'' portion of the FTP test cycle. If the comparison is paired, it must demonstrate that the alternate system passes a two-sided, paired t-test described in this paragraph. If the test is unpaired, it must demonstrate that the alternate system passes a two-sided, unpaired t-test described in this paragraph. Other statistical criteria may be set by the Administrator. The average of these tests for the reference system must return results less than or equal to the applicable emissions standard. The t-test is performed as follows, where ''n'' equals the number of tests:

(A) Calculate the average of the alternate system results; this is A_{avg}.

(B) Calculate the average of the results of the system to which the alternate system was referenced; this is R_{avg}.

(C) For an unpaired comparison, calculate the ''n−1'' standard deviation for the alternate and reference averages; these are A_{sd} and R_{sd} respectively. A_{sd} must be less than or equal to R_{sd}. If A_{sd} is greater than R_{sd}, the Administrator will not approve the application.

(D) For an unpaired comparison, calculate the t-value:

$$t_{unpaired} = (A_{avg} - R_{avg})/((A_{sd}^2 + R_{sd}^2)/n)^{1/2}$$

(E) For a paired comparison, calculate the ''n−1'' standard deviation (squared) of the differences, d_i, between the paired results, where ''i'' represents the ith test of n number of tests:

$$S_D^2 = (Sd_i^2 - ((Sd_i)^2/n))/(n-1)$$

(F)(*1*) For a paired comparison, calculate the t-value:

$$t_{paired} = (A_{avg} - R_{avg})/(S_D^2/n)^{1/2}$$

(*2*) The absolute value of t must be less than the critical t value, t_{crit} at a 90% confidence interval for ''n−1'' degrees of freedom. The following table lists 90% confidence interval t_{crit} values for n−1 degrees of freedom:

90% Confidence interval critical t values vs. n−1 degrees of freedom for a two-sided, paired t−test

n −1	t_{crit}
6	1.94
7	1.89
8	1.86
9	1.83
10	1.81
11	1.80
12	1.78
13	1.77
14	1.76
15	1.75
16	1.75
17	1.74
18	1.73
19	1.73
20	1.72

[66 FR 5168, Jan. 18, 2001]

§ 86.1306–90 Equipment required and specifications; overview.

(a) *Exhaust emission tests.* All engines subject to this subpart are tested for exhaust emissions. Petroleum-fueled, natural gas-fueled, liquefied petroleum gas-fueled and methanol-fueled, Otto-cycle and diesel engines are tested identically with the exception of the systems used to measure hydrocarbon, nitrogen oxide, methanol, formaldehyde and particulate; petroleum-fueled diesel engines require a heated, continuous hydrocarbon detector and a continuous nitrogen oxide detector (§ 86.1310); methanol-fueled engines require a heated hydrocarbon detector, a methanol detector and a formaldehyde detector; either a heated or a non-heated continuous hydrocarbon detector may be used with natural gas-fueled and liquefied petroleum gas-fueled diesel engines; gasoline-fueled, natural gas-fueled, liquefied petroleum gas-fueled and methanol-fueled Otto-cycle

engines are not tested for particulate emissions (§ 86.1309). Necessary equipment and specifications appear in §§ 86.1308, 86.1309, 86.1310 and 86.1311.

(b) *Fuel, analytical gas, and engine cycle specifications.* Fuel specifications for exhaust emission testing are specified in § 86.1313. Analytical gases are specified in § 86.1314. The EPA heavy-duty transient engines cycles for use in exhaust testing are described in § 86.1333 and specified in appendix I to this part.

[54 FR 14572, Apr. 11, 1989, as amended at 59 FR 48525, Sept. 21, 1994]

§ 86.1306–96 Equipment required and specifications; overview.

(a) *Exhaust emission tests.* All engines subject to this subpart are tested for exhaust emissions. Petroleum-, natural gas-, liquefied petroleum gas-, and methanol-fueled Otto-cycle and diesel engines are tested identically with two exceptions. First, the systems used to measure hydrocarbon, nitrogen oxide, methanol, formaldehyde and particulate depend on the type of engine being tested; petroleum-fueled diesel engines require a heated, continuous hydrocarbon detector and a heated, continuous nitrogen oxide detector (see § 86.1310); methanol-fueled engines require a heated hydrocarbon detector, a methanol detector and a formaldehyde detector; either a heated or non-heated continuous hydrocarbon detector may be used with natural gas-fueled and liquefied petroleum gas-fueled diesel engines; gasoline-fueled, natural gas-fueled, liquefied petroleum gas-fueled and methanol-fueled Otto-cycle engines are not tested for particulate emissions (see § 86.1309). Second, if a gasoline-fueled and methanol-fueled engine is to be used in a vehicle equipped with an evaporative canister, the test engine must have a loaded evaporative canister attached for the exhaust emission test. Necessary equipment and specifications appear in §§ 86.1308, 86.1309, 86.1310 and 86.1311.

(b) *Fuel, analytical gas, and engine cycle specifications.* Fuel specifications for exhaust emission testing are specified in § 86.1313. Analytical gases are specified in § 86.1314. The EPA heavy-duty transient engine cycles for use in exhaust testing are described in § 86.1333 and specified in appendix I to this part.

[58 FR 16064, Mar. 24, 1993, as amended at 59 FR 48525, Sept. 21, 1994]

§ 86.1308–84 Dynamometer and engine equipment specifications.

(a) *Engine dynamometer.* The engine dynamometer system must be capable of controlling engine torque and rpm simultaneously over transient cycles. The transient torque and rpm schedules described in § 86.1333–84 and specified in appendix I ((f)(i), (2), and (3)) must be followed within the accuracy requirements specified in § 86.1341–84. In addition to these general requirements, the engine or dynamometer readout signals for speed and torque shall meet the following accuracy specifications:

(1) Engine speed readout shall be accurate to within ±2 percent of the absolute standard value, as defined in paragraph (d) of this section.

(2) Engine flywheel torque readout shall be accurate to either within ±3 percent of the NBS ''true'' value torque (as defined in paragraph (e) of this section), or the following accuracies:

(i) ±2.5 ft-lbs. of the NBS ''true'' value if the full scale value is 550 ft-lbs. or less.

(ii) ±5 ft-lbs. of the NBS ''true'' value if the full scale value is 1050 ft-lbs. or less.

(iii) ±10 ft.-lbs., of the NBS ''true'' value if the full scale value is greater than 1050 ft.-lbs.

(3) *Option:* Internal dynamometer signals (i.e., armature current, etc.) may be used for torque measurement provided that it can be shown that the engine flywheel torque during the test cycle conforms to the accuracy specifications in paragraph (a) of this section. Such a measurement system must include compensation for increased or decreased flywheel torque due to the armature inertia during accelerations and decelerations in the test cycle.

(b) *Cycle verification equipment.* In order to verify that the test engine has followed the test cycle correctly, the dynamometer or engine readout signals for speed and torque must be collected in a manner that allows a statistical correlation between the actual engine performance and the test cycle (See § 86.1341–84). Normally this collection

process would involve conversion of analog dynamometer or engine signals into digital values for storage in a computer. The conversion of dynamometer or engine values (computer or other) that are used to evaluate the validity of engine performance in relation to the test cycle shall be performed in a manner such that:

(1) Speed values used for cycle evaluation are accurate to within 2 percent of the dynamometer or engine flywheel torque readout value.

(2) Engine flywheel torque values used for cycle evaluation are accurate to within 2 percent of the dynamometer or engine flywheel torque readout value.

(c) *Option:* For some systems it may be more convenient to combine the tolerances in paragraphs (a) and (b) of this section. This is permitted if the root mean square method (RMS) is used. The RMS values would then refer to accuracy in relationship to absolute standard or to NBS ''true'' values.

(1) Speed values used for cycle evaluation shall be accurate to within ±2.8 percent of the absolute standard values, as defined in paragraph (d) of this section.

(2) Engine flywheel torque values used for cycle evaluation shall be accurate to within ±3.6 percent of NBS ''true'' values, as determined in paragraph (e) of this section.

(d) *Speed calibration equipment.* A 60-tooth (or greater) wheel in combination with a common mode rejection frequency counter is considered an absolute standard for engine or dynamometer speed.

(e) *Torque calibration equipment.* Two techniques are allowed for torque calibration. Alternate techniques may be used if shown to yield equivalent accuracies. The NBS ''true'' value torque is defined as the torque calculated by taking the product of an NBS traceable weight or force and a sufficiently accurate horizontal lever arm distance, corrected for the hanging torque of the lever arm.

(1) The lever-arm dead-weight technique involves the placement of known weights at a known horizontal distance from the center of rotation of the torque measuring device. The equipment required is:

(i) *Calibration weights.* A minimum of six calibration weights for each range of torque measuring device used are required. The weights must be approximately equally spaced and each must be traceable to NBS weights. Laboratories located in foreign countries may certify calibration weights to local government bureau standards. Certification of weight by state government Bureau of Weights and Measures is acceptable. Effects of changes in gravitational constant at the test site may be accounted for if desired.

(ii) *Lever arm.* A lever arm with a minimum length of 24 inches is required. The horizontal distance from the centerline of the engine torque measurement device to the point of weight application shall be accurate to within ±0.10 inches. The arm must be balanced, or the hanging torque of the arm must be known to within ±0.1 ft-lbs.

(2) The transfer technique involves the calibration of a master load cell (i.e., dynamometer case load cell). This calibration can be done with known calibration weights at known horizontal distances, or by using a hydraulically actuated precalibrated master load cell. This calibration is then transferred to the flywheel torque measuring device. The technique involves the following steps:

(i) A master load cell shall be either precalibrated or be calibrated per paragraph (e)(1)(i) of this section with known weights traceable to NBS, and used with the lever arm(s) specified in paragraph (e)(2)(ii) of this section. The dynamometer should be either running or vibrated during this calibration to minimize static hysteresis.

(ii) A lever arm(s) with a minimum length of 24 inches is (are) required. The horizontal distances from the centerline of the master load cell, to the centerline of the dynamometer, and to the point of weight or force application shall be accurate to within ±0.10 inches. The arm(s) must be balanced or the net hanging torque of the arm(s) must be known to within ±0.1 ft.-lbs.

(iii) Transfer of calibration from the case or master load cell to the flywheel torque measuring device shall be performed with the dynamometer operating at a constant speed. The flywheel

torque measurement device readout shall be calibrated to the master load cell torque readout at a minimum of six loads approximately equally spaced across the full useful ranges of both measurement devices. (Note that good engineering practice requires that both devices have approximately equal useful ranges of torque measurement.) The transfer calibration shall be performed in a manner such that the accuracy requirements of paragraph (a)(2) of this section for the flywheel torque measurement device readout be met or exceeded.

(3) Other techniques may be used if shown to yield equivalent accuracy.

(f) *Diesel engines only*. If direct measurement of mass fuel consumption is chosen as an option in lieu of dilute exhaust CO_2 measurement, the fuel measurement device shall be accurate to within ±2 percent of actual mass fuel flow.

[48 FR 52210, Nov. 16, 1983, as amended at 49 FR 48142, Dec. 10, 1984; 52 FR 47870, Dec. 16, 1987]

§ 86.1309–90 Exhaust gas sampling system; Otto-cycle and non-petroleum-fueled engines.

(a)(1) *General*. The exhaust gas sampling system described in this paragraph is designed to measure the true mass of gaseous emissions in the exhaust of either gasoline-fueled, natural gas-fueled, liquefied petroleum gas-fueled or methanol-fueled engines. In the CVS concept of measuring mass emissions, two conditions must be satisfied; the total volume of the mixture of exhaust and dilution air must be measured, and a continuously proportioned volume of sample must be collected for analysis. Mass emissions are determined from the sample concentration and total flow over the test period.

(2) *Engine exhaust to CVS duct*. For methanol-fueled engines, reactions of the exhaust gases in the exhaust duct connected to the dilution tunnel (for the purposes of this paragraph, the exhaust duct excludes the length of pipe representative of the vehicle exhaust pipe) shall be minimized. This may be accomplished by:

(i) Using a duct of unrestricted length maintained at a temperature below 599 °F (315 °C). (Cooling capabilities as required); or

(ii) Using a smooth wall duct less than five feet long with no required heating (a maximum of two short flexible connectors are allowed under this option); or

(iii) Omitting the duct and performing the exhaust gas dilution function at the engine exhaust manifold, immediately after exhaust aftertreatment systems, or after a length of pipe representative of the vehicle exhaust pipe; or

(iv) Partial dilution of the exhaust gas prior to entering the dilution tunnel, which lowers the duct temperature below 599 °F (315 °C).

(3) *Positive displacement pump*. The Positive Displacement Pump Constant Volume Sampler (PDP-CVS), Figure N90–1 satisfies the first condition by metering at a constant temperature and pressure through the pump. The total volume is measured by counting the revolutions made by the calibrated positive displacement pump. The proportional samples for the bag sample, the methanol sample (Figure N90–2), and the formaldehyde sample (Figure N90–3), as applicable are achieved by sampling at a constant flow rate. For methanol-fueled engines, the sample lines for the methanol and formaldehyde samples are heated to prevent condensation. (Note: For 1990 through 1994 model year methanol-fueled engines, methanol and formaldehyde sampling may be omitted provided the bag sample (hydrocarbons and methanol) is analyzed using a HFID calibrated with methanol.)

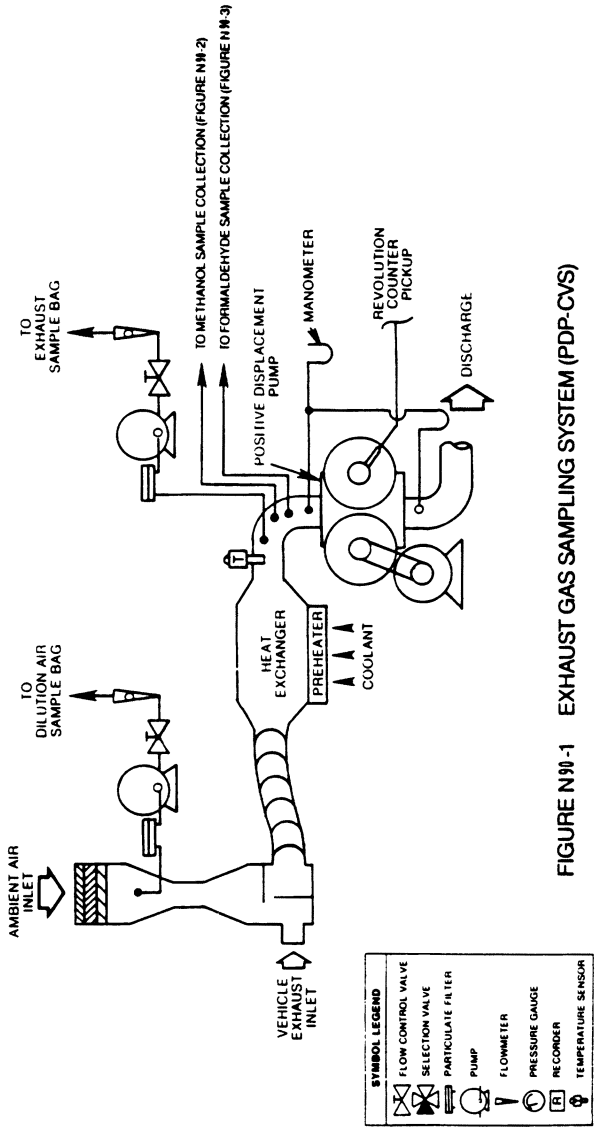

FIGURE N90-1 EXHAUST GAS SAMPLING SYSTEM (PDP-CVS)

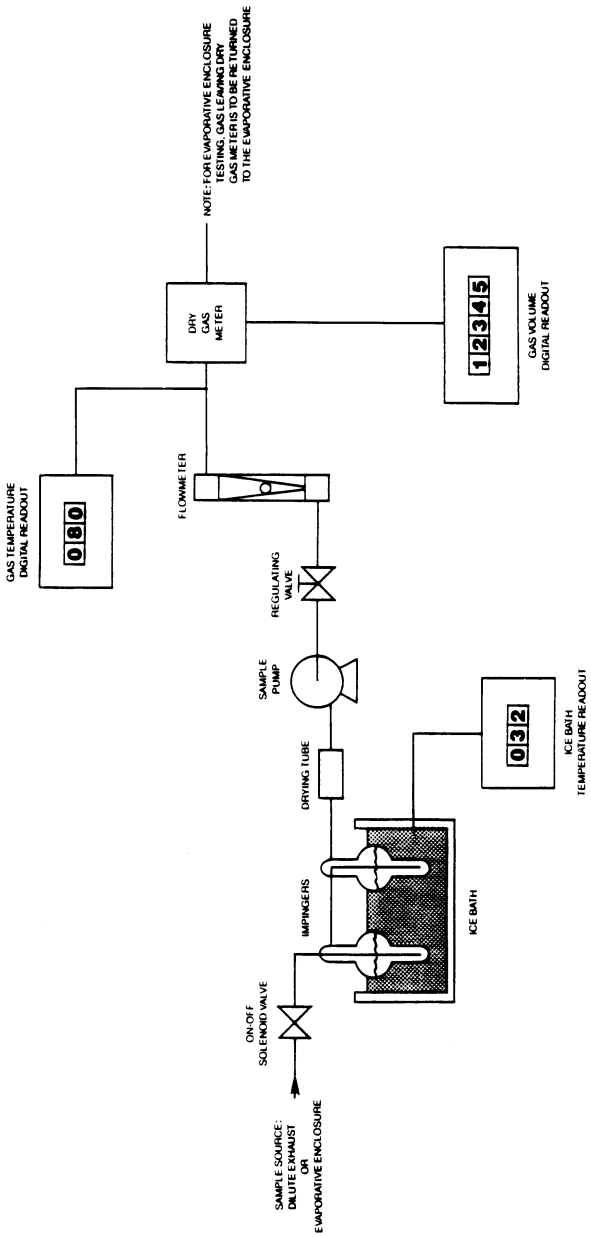

FIGURE N90-2 METHANOL SAMPLE COLLECTION FLOW SYSTEM

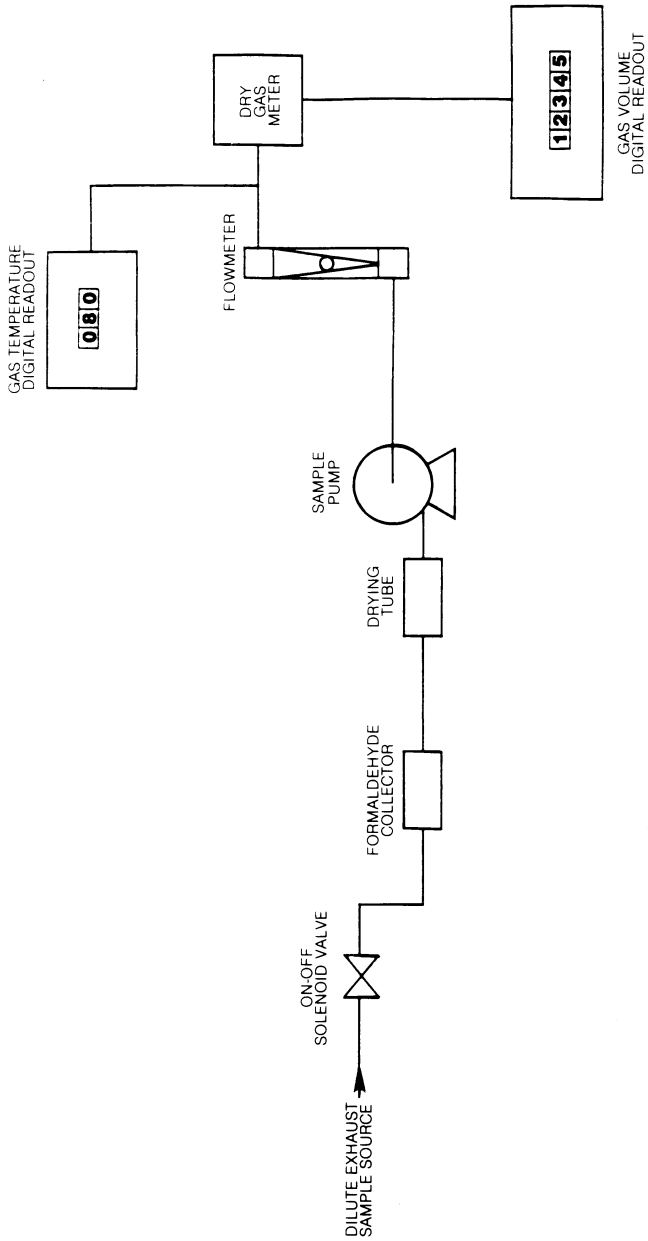

FIGURE N90-3 FORMALDEHYDE SAMPLE COLLECTION FLOW SCHEMATIC

(4) *Critical flow venturi.* The operation of the Critical Flow Venturi Constant Volume Sampler (CFV-CVS), Figure N90–4 is based upon the principles of fluid dynamics associated with critical flow. The CFV system is commonly called a constant volume system (CVS) even though the flow varies. It would

be more proper to call the critical flow venturi (CFV) system a constant proportion sampling system since proportional sampling throughout temperature excursions is maintained by use of a small CFVs in the sample lines. For engines requiring measurement of methanol and/or formaldehyde, one line supplies sample for the bag sample, another line supplies sample for the methanol sample, and a third line supplies sample for the formaldehyde sample. The lines for the methanol and formaldehyde samples are heated to prevent condensation with care being taken to ensure that the CFVs of the sample probes are not heated. (Note: For 1990 through 1994 model year methanol-fueled engines, methanol and formaldehyde sampling may be omitted provided the bag sample (hydrocarbons and methanol) is analyzed using a HFID calibrated with methanol. The variable mixture flow rate is maintained at choked flow, which is inversely proportional to the square root of the gas temperature, and is computed continuously. Since the pressure and temperature are the same at all venturi inlets, the sample volume is proportional to the total volume.)

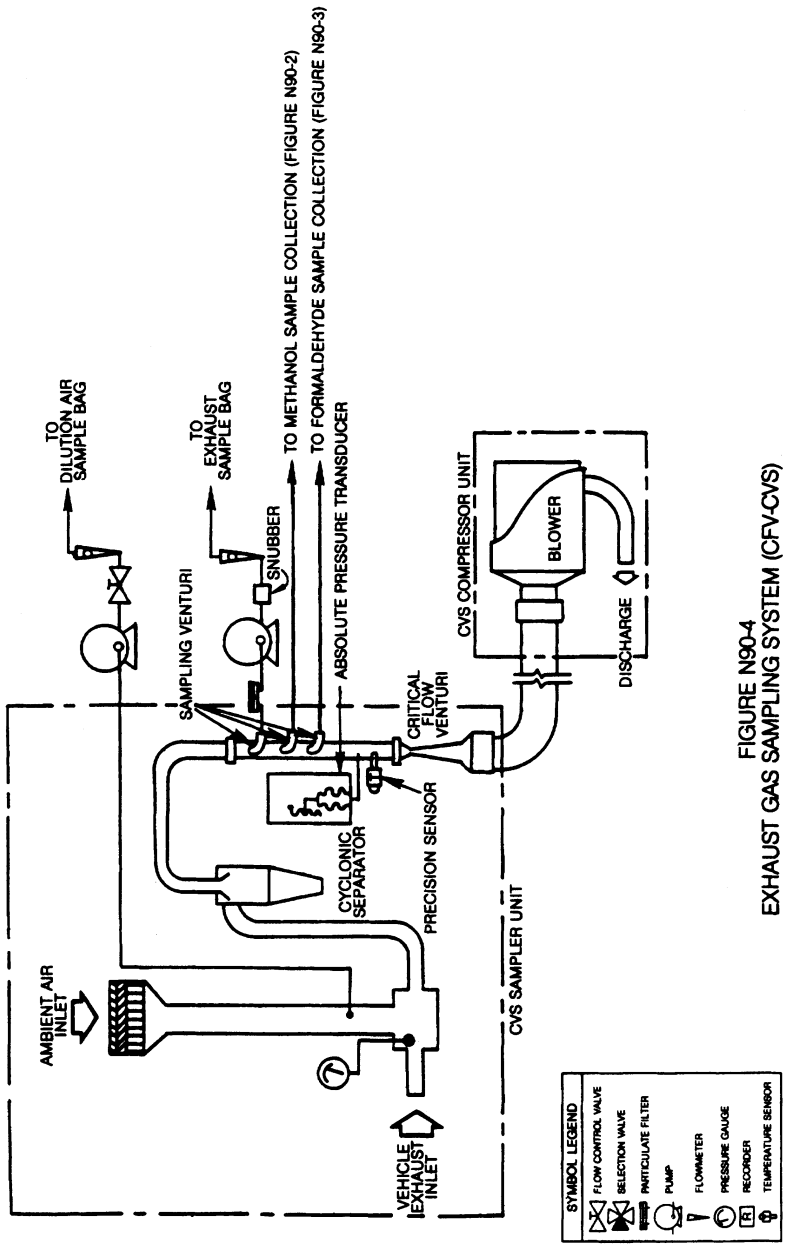

FIGURE N90-4
EXHAUST GAS SAMPLING SYSTEM (CFV-CVS)

(5) *Electronic Flow Control.* The Electronic Flow Control Critical Flow Venturi Constant Volume Sampler (EFC-CFV-CVS) is identical to the CFV-CVS system, except that it uses electronic mass flow meters to maintain proportional sampling for methanol and

formaldehyde. The flow rate of the exhaust plus dilution air and the sample flow rate are measured electronically. Proportionality is maintained by electronically controlled metering valves in the methanol and formaldehyde sample lines. Control of the valves is based on the electronic response of the flow meters. It is recommended that total flow sample volumes be measured by separate flow meters. For methanol-fueled engines, one line supplies sample for the bag sample, another line supplies sample for the methanol sample, and a third line supplies sample for the formaldehyde sample. The sample lines for methanol and for formaldehyde may both draw samples from a single static probe. The lines for the methanol and formaldehyde samples are heated to prevent condensation.

(6) *Other systems*. Other sampling and/or analytical systems including the systems described in § 86.1310 for petroleum-fueled diesel engines may be used if shown to yield equivalent results, and if approved in advance by the Administrator.

(7) Since various configurations can produce equivalent results, exact conformance with these drawings is not required. Additional components such as instruments, valves, solenoids, pumps and switches may be used to provide additional information and coordinate the functions of the component systems. Other components such as snubbers, which are not needed to maintain accuracy on some systems, may be excluded if their exclusion is based upon good engineering judgment.

(b) *Component description*, PDP-CVS. The PDP-CVS, Figure N90–1, consists of a dilution air filter and mixing assembly, heat exchanger, positive displacement pump, sampling systems (see Figure N90–2 for methanol sampling system and Figure N90–3 for formaldehyde sampling system) including sampling lines which are heated to prevent condensation in the case of the methanol-fueled engine, and associated valves, pressure and temperature sensors. The temperature of the sample lines shall be more than 5 °F (3 °C) above the maximum dew point of the mixture and less than 250 °F (121 °C). (It is recommended the they be maintained at 235 ±15 °F (113 ±8 °C)). Heating of the sample lines may be omitted, provided the methanol and formaldehyde sample collection systems are close coupled to the probes thereby preventing loss of sample due to cooling and resulting condensation in the sample lines. The PDP-CVS shall conform to the following requirements:

(1) Exhaust system backpressure must not be artificially lowered by the CVS or dilution air inlet system. Measurements to verify this should be made in the raw exhaust immediately upstream of the inlet to the CVS. (For diesel engines, this measurement should be made immediately upstream of the backpressure set device.) This verification requires the continuous measurement and comparison of raw exhaust static pressure observed during a transient cycle, both with and without the operating CVS. Static pressure measured with the operating CVS system shall remain within ±5 inches of water (1.2 kPa) of the static pressure measured without connection to the CVS, at identical moments in the test cycle. (Sampling systems capable of maintaining the static pressure to within ±1 inch of water (0.25 kPa) will be used by the Administrator if a written request substantiates the need for this closer tolerance.) This requirement is essentially a design specification for the CVS/dilution air inlet system, and should be performed as often as good engineering practice dictates (*e.g.*, after installation of an uncharacterized CVS, addition of an unknown inlet restriction on the dilution air, etc.).

(2) The gas mixture temperature, measured at a point immediately ahead of the positive displacement pump and after the heat exchanger, shall be maintained within ±10 °F (±5.6 °C) of the average operating temperature observed during the test. (The average operating temperature may be estimated from the average operating temperature from similar tests.) The temperature measuring system (sensors and readout) shall have an accuracy and precision of ±3.4 °F (1.9 °C).

(3) The pressure gauges shall have an accuracy and precision of ±3 mm Hg (0.4 kPa).

(4) The flow capacity of the CVS shall be large enough to eliminate water

condensation in the system. This is especially critical for methanol-fueled engines and may also be of concern with natural gas- and liquefied petroleum gas-fueled engines; see ''Calculation of Emissions and Fuel Economy When Using Alternative Fuels,'' EPA 460/3–83–009. Dehumidifying the dilution air before entering the CVS is allowed. Heating is also allowed, provided:

(i) The air (or air plus exhaust gas) temperature does not exceed 250 °F, or 125 °F if particulate emissions are measured;

(ii) Calculation of the CVS flow rate necessary to prevent water condensation is based on the lowest temperature encountered in the CVS prior to sampling. (It is recommended that the CVS system be insulated when heated dilution air is used.);

(iii) The dilution ratio is sufficiently high to prevent condensation in bag samples as they cool to room temperature.

(5) Sample collection bags for dilution air and exhaust samples shall be of sufficient size so as not to impede sample flow. A single dilution air sample, covering the total test period, may be collected for the determination of methanol and formaldehyde background (where applicable).

(6) The methanol sample collection system and the formaldehyde sample collection system shall each be of sufficient capacity so as to collect samples of adequate size for analysis without significant impact on the volume of dilute exhaust passing through the PDP. The systems shall also comply with the following requirements that apply to the design of the systems, not to individual tests:

(i) The methanol system shall be designed such that, if a test engine emitted the maximum allowable level of methanol (based on all applicable standards) during the first phase of the test, the measured concentration in the primary impinger would exceed either 25 mg/l or a concentration equal to 25 times the limit of detection for the GC analyzer.

(ii) The formaldehyde system shall be designed such that, if a test engine emitted formaldehyde at a rate equal to twenty percent of the maximum allowable level of THCE (i.e., 0.2 g/Bhp-hr for a 1.1 g/Bhp-hr THCE standard), or the maximum formaldehyde level allowed by a specific formaldehyde standard, whichever is less, during the first phase of the test, the concentration of formaldehyde in the DNPH solution of the primary impinger, or solution resulting from the extraction of the DNPH cartridge, shall exceed either 2.5 mg/l or a concentration equal to 25 times the limit of detection for the HPLC analyzer.

(iii) The methanol and formaldehyde systems shall be designed such that the primary impinger collects at least 90 percent of the analyte in the samples. The remaining analyte shall be collected by the secondary impinger. Sampling systems shall be identical for all phases.

(c) *Component description, CFV.* The CFV sample system, Figure N90–4, consists of a dilution air filter (optional) and mixing assembly, cyclone particulate separator (optional), unheated sampling venturies for the bag, methanol and formaldehyde samples, as applicable, heated sample lines to prevent condensation in the case of the methanol-fueled engine, critical flow venturi, and associated valves, pressure and temperature sensors. The temperature of the sample lines shall be more than 5 °F (3 °C) above the maximum dew point of the mixture and less than 250 °F (121 °C). (It is recommended the they be maintained at 235 ±15 °F (113 ±8 °C)). Heating of the sample lines may be omitted, provided the methanol and formaldehyde sample collection systems are close coupled to the probes thereby preventing loss of sample due to cooling and resulting condensation in the sample lines. The CFV sample system shall conform to the following requirements:

(1) Static pressure variations in the raw exhaust shall conform to the specifications detailed in paragraph (b)(1) of this section.

(2) The temperature measuring system (sensors and readout) shall have an accuracy and precision of ±3.4 °F (±1.9 °C). The temperature measuring system used in a CVS without a heat exchanger shall have a response time of 1.50 seconds to 62.5 percent of a temperature change (as measured in hot silicone oil). There is no response time

requirement for a CVS equipped with a heat exchanger.

(3) The pressure measuring system (sensors and readout) shall have an accuracy and precision of ±3 mm Hg (0.4 kPa).

(4) The flow capacity of the CVS shall be large enough to eliminate water condensation in the system. This is especially critical for methanol-fueled engines and may also be of concern with natural gas- and liquefied petroleum gas-fueled engines; see ''Calculation of Emissions and Fuel Economy When Using Alternative Fuels,'' EPA 460/3–83–009. Dehumidifying the dilution air before entering the CVS is allowed. Heating is also allowed, provided:

(i) The air (or air plus exhaust gas) temperature does not exceed 250 °F, or 125 °F if particulate emissions are measured.

(ii) Calculation of the CVS flow rate necessary to prevent water condensation is based on the lowest temperature encountered in the CVS prior to sampling. (It is recommended that the CVS system be insulated when heated dilution air is used.)

(iii) The dilution ratio is sufficiently high to prevent condensation in bag samples as they cool to room temperature.

(5) Sample collection bags for dilution air and exhaust samples shall be of sufficient size so as not to impede sample flow. A single dilution air sample, covering the total test period, may be collected for the determination of methanol and formaldehyde background (where applicable).

(6) The methanol sample collection system and the formaldehyde sample collection system shall each be of sufficient capacity so as to collect samples of adequate size for analysis without significant impact on the volume of dilute exhaust passing through the CFV. The systems shall also comply with the following requirements that apply to the design of the systems, not to individual tests:

(i) The methanol system shall be designed such that, if a test engine emitted the maximum allowable level of methanol (based on all applicable standards) during the first phase of the test, the measured concentration in the primary impinger would exceed either 25 mg/l or a concentration equal to 25 times the limit of detection for the GC analyzer.

(ii) The formaldehyde system shall be designed such that, if a test engine emitted formaldehyde at a rate equal to twenty percent of the maximum allowable level of THCE (i.e., 0.2 g/Bhp-hr for a 1.1 g/Bhp-hr THCE standard), or the maximum formaldehyde level allowed by a specific formaldehyde standard, whichever is less, during the first phase of the test, the concentration of formaldehyde in the DNPH solution of the primary impinger, or solution resulting from the extraction of the DNPH cartridge, shall exceed either 2.5 mg/l or a concentration equal to 25 times the limit of detection for the HPLC analyzer.

(iii) The methanol and formaldehyde systems shall be designed such that the primary impinger collects at least 90 percent of the analyte in the samples. The remaining analyte shall be collected by the secondary impinger. Sampling systems shall be identical for all phases of the test.

(d) *Component description, EFC-CFV.* The EFC-CFV sample system, is identical to the CFV system described in paragraph (c) of this section, with the addition of electronic flow controllers, metering valves, separate flow meters to totalize sample flow volumes (optional), for methanol and formaldehyde samples. Both samples may be drawn from a single static probe. The EFC sample system shall conform to the following requirements:

(1) All of the requirements of paragraph (c) of this section.

(2) The ratio of sample flow to CVS flow must not vary by more ±5 percent from the setpoint of the test.

(3) The sample flow totalizers shall meet the accuracy specifications of § 86.1320. Total sample flow volumes may be obtained from the flow controllers, with advance approval of the Administrator, provided that they can be shown to meet the accuracy specifications of § 86.1320.

[54 FR 14572, Apr. 11, 1989, as amended at 59 FR 48525, Sept. 21, 1994; 60 FR 34364, June 30, 1995; 66 FR 5169, Jan. 18, 2001]

§ 86.1310–90 Exhaust gas sampling and analytical system; diesel engines.

(a) *General.* The exhaust gas sampling system described in this paragraph is designed to measure the true mass of both gaseous and particulate emissions in the exhaust of petroleum-fueled, natural gas-fueled, liquefied petroleum gas-fueled and methanol-fueled heavy-duty diesel engines. This system utilizes the CVS concept (described in § 86.1309) of measuring the combined mass emissions of HC, CH_3OH and HCHO from methanol-fueled engines and CO, CO_2 and particulate from all fuel types. A continuously integrated system is required for THC (petroleum-fueled, natural gas-fueled, and liquefied petroleum gas-fueled engines) and NO_X (all engines) measurement, and is allowed for all CO and CO_2 measurements plus the combined emissions of CH_3OH, HCHO, and HC from methanol-fueled engines. Where applicable, separate sampling systems are required for methanol and for formaldehyde. The mass of gaseous emissions is determined from the sample concentration and total flow over the test period. The mass of particulate emissions is determined from a proportional mass sample collected on a filter and from the sample flow and total flow over the test period. As an option, the measurement of total fuel mass consumed over a cycle may be substituted for the exhaust measurement of CO_2. General requirements are as follows:

(1) This sampling system requires the use of a PDP-CVS and a heat exchanger, a CFV-CVS (or an EFC-CFV-CVS) with either a heat exchanger or electronic flow compensation. Figure N90–5 is a schematic drawing of the PDP system. Figure N90–6 is a schematic drawing of the CFV-CVS system.

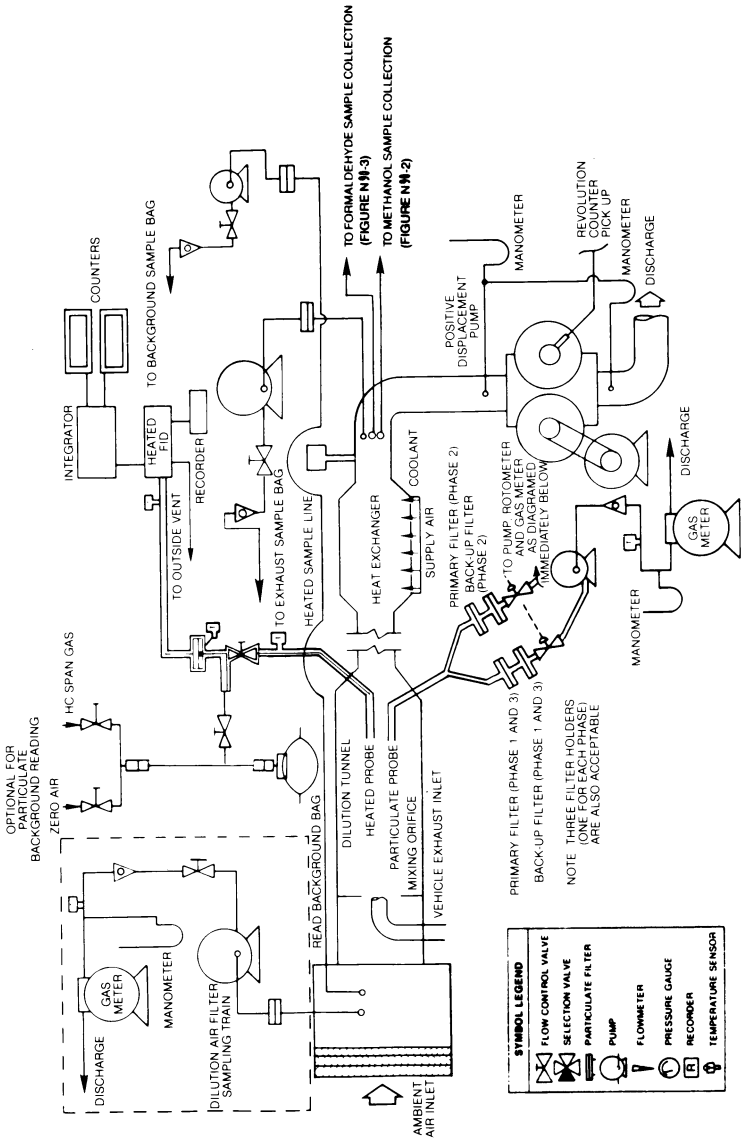

FIGURE N86-5
GASEOUS AND PARTICULATE EMISSIONS SAMPLING SYSTEM (PDP-CVS)

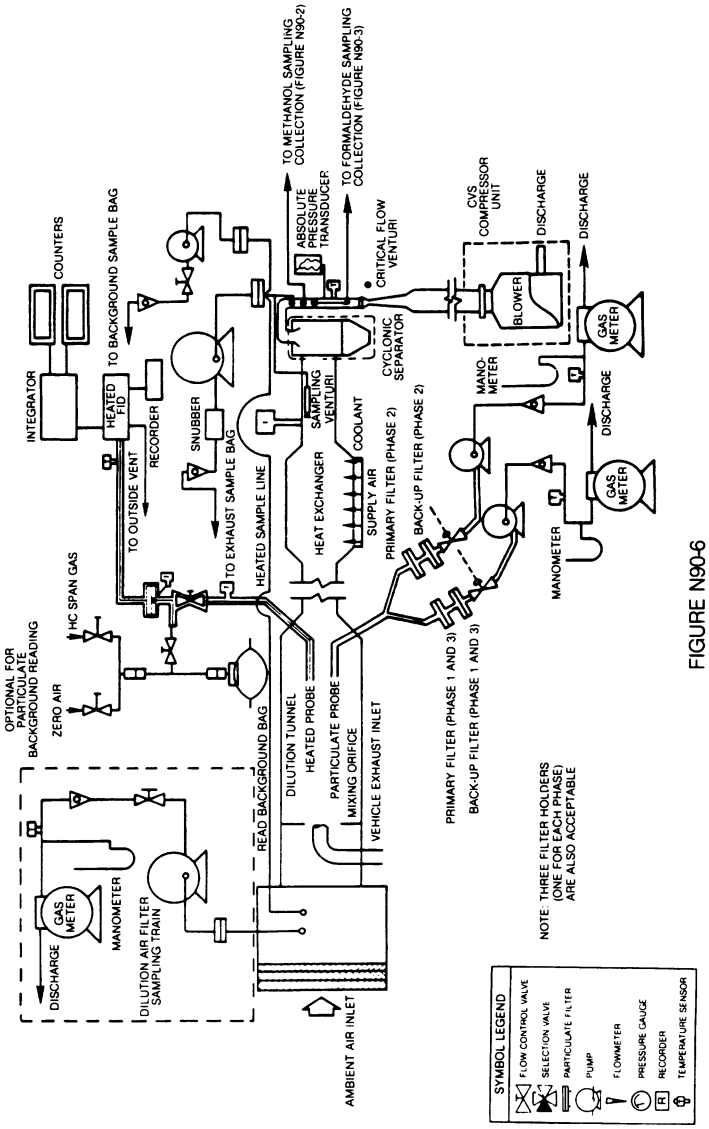

FIGURE N90-6
GASEOUS AND PARTICULATE EMISSIONS SAMPLING SYSTEM (CFV-CVS)

(2) The HC analytical system for petroleum-fueled diesel engines requires a heated flame ionization detector (HFID) and heated sample system (375 ±20 °F (191 ±11 °C)). For natural gas-fueled and liquefied petroleum gas-fueled diesel engines either a heated flame ionization detector and heated sample system as required for petroleum fuel or a non-heated flame ionization detector may be used.

(3) Methanol-fueled engines require the use of a heated flame ionization detector (HFID) (235°±15 °F (113°±8 °C)) for hydrocarbon analysis. With a heated FID, the hydrocarbon analysis can be made on the bag sample and the methanol and formaldehyde analyses are

performed on the samples collected for these purposes (Figures N90–2 and N90–3).

NOTE: For 1990 through 1994 model year methanol-fueled engines, methanol and formaldehyde sampling may be omitted provided the hydrocarbon plus methanol analyses are performed using a FID calibrated on methanol.

(4) For methanol-fueled engines, cooling or reaction of the exhaust gases in the exhaust duct connected to the dilution tunnel (for the purposes of this paragraph, the exhaust duct excludes the length of pipe representative of the vehicle exhaust pipe) shall be minimized. This may be accomplished by:

(i) Using a duct of unrestricted length maintained at a temperature below 599 °F (315 °C). (Heating and possibly cooling capabilities as required); or

(ii) Using a smooth wall duct less than five feet long with no required heating (a maximum of two short flexible connectors are allowed under this option); or

(iii) Omitting the duct and performing the exhaust gas dilution function at the engine exhaust manifold or immediately after exhaust aftertreatment systems, or after a length of pipe representative of the vehicle exhaust pipe; or

(iv) Partial dilution of the exhaust gas prior to entering the dilution tunnel, which lowers the duct temperature below 599 °F (315 °C).

(5) Heated sample lines are required for the methanol and formaldehyde samples (care must be taken to prevent heating of the sample probes unless compensation for varying flow rate is made). The sample collection lines shall be heated to a temperature more than 5 °F (3 °C) above the maximum dew point of the mixture, but below 250 °F (121 °C).

(6) The CO and CO_2 analytical system requires:

(i) Bag sampling (§ 86.1309) and analytical (§ 86.1311) capabilities, as shown in Figure N90–5 (or Figure N90–6), or

(ii) Continuously integrated measurement of diluted CO and CO_2 meeting the minimum requirements and technical specifications contained in paragraph (b)(5) of this section. Unless compensation for varying flow is made, a constant flow system must be used to ensure a representative sample.

(7) The NO_X analytical system requires a continuously integrated measurement of diluted NO_X meeting the minimum requirements and technical specifications contained in paragraph (b)(5) of this section. Unless compensation for varying flow is made, a constant flow system must be used to ensure a representative sample.

(8) The mass of particulate in the exhaust is determined via filtration. The particulate sampling system requires dilution of the exhaust in either one or two steps to a temperature never greater than 125 °F (51.7 °C) at the primary sample filter. A backup filter provides a confirmation of sufficient filtering efficiency.

(9) Since various configurations can produce equivalent results, exact conformance with these drawings is not required. Additional components such as instruments, valves, solenoids, pumps, and switches may be used to provide additional information and coordinate the functions of the component systems. Other components, such as snubbers, which are not needed to maintain accuracy on some systems, may be excluded if their exclusion is based upon good engineering judgment.

(10) Other sampling and/or analytical systems may be used if shown to yield equivalent results and if approved in advance by the Administrator.

(b) *Component description.* The components necessary for exhaust sampling shall meet the following requirements:

(1) *Exhaust dilution system.* The PDP-CVS shall conform to all of the requirements listed for the exhaust gas PDP-CVS in § 86.1309(b). The CFV-CVS shall conform to all of the requirements listed for the exhaust gas CFV-CVS in § 86.1309(c). The EFC-CFV-CVS shall conform to all of the requirements listed for the exhaust gas EFC-CVS in § 86.1309(d). In addition, the CFV-CVS and EFC–CFV-CVS must conform to the following requirements:

(i) The flow capacity of the CVS must be sufficient to maintain the diluted exhaust stream at or below the temperatures required for the measurement of particulate and hydrocarbon emission noted below and at, or above, the temperatures where condensation

of water in the exhaust gases could occur. This may be achieved by either of the following two methods:

(A) *Single-dilution method.* The flow capacity of the CVS must be sufficient to maintain the diluted exhaust stream at a temperature of 125 °F (51.7 °C) or less, at the sampling zone in the primary dilution tunnel and as required to prevent condensation at any point in the dilution tunnel. Direct sampling of the particulate material may then take place (Figure N90–5).

(B) *Double-dilution method.* The flow capacity of the CVS must be sufficient to maintain the diluted exhaust stream in the primary dilution tunnel at a temperature of 375 °F (191 °C) (250 °F (121 °C) for methanol fueled engines) or less at the sampling zone and as required to prevent condensation at any point in the dilution tunnel. Gaseous emission samples may be taken directly from this sampling point. An exhaust sample must then be taken at this point to be diluted a second time for use in determining particulate emissions. The secondary dilution system must provide sufficient secondary dilution air to maintain the double-diluted exhaust stream at a temperature of 125 °F (51.7 °C) or less immediately before the primary particulate filter in the secondary dilution tunnel.

(ii) For the CFV-CVS or EFC-CFV-CVS, either a heat exchanger or electronic flow compensation (which also includes the particulate sample flows) is required (see Figure N90–6).

(iii) For the CFV-CVS or EFC-CFV-CVS when a heat exchanger is used, the gas mixture temperature, measured at a point immediately ahead of the critical flow venturi, shall be within ±20 °F (±11 °C) of the average operating temperature observed during the test with the simultaneous requirement that condensation does not occur. The temperature measuring system(sensors and readout) shall have an accuracy and precision of ±3.4 °F (1.9 °C). For systems utilizing a flow compensator to maintain proportional sampling, the requirement for maintaining constant temperature is not necessary.

(iv) The primary dilution air and secondary dilution air (if applicable):

(A) Shall have a temperature of 77°±9 °F (25°±5 °C). For the first 10 seconds this specification is 77°±20 °F (25°±11 °C).

(B) May be filtered at the dilution air inlet.

(C) Primary dilution air may be sampled to determine background particulate levels, which can then be subtracted from the values measured in the diluted exhaust stream. The primary dilution air shall be sampled at the inlet to the primary dilution tunnel, if unfiltered, or downstream of any primary dilution air conditioning devices, if used.

(2) [Reserved]

(3) *Continuous HC measurement system.* (i) The continuous HC sample system (as shown in Figure N90–7 or N90–8) uses an ''overflow'' zero and span system. In this type of system, excess zero or span gas spills out of the probe when zero and span checks of the analyzer are made. The ''overflow'' system may also be used to calibrate the HC analyzer per § 86.1321(b), although this is not required.

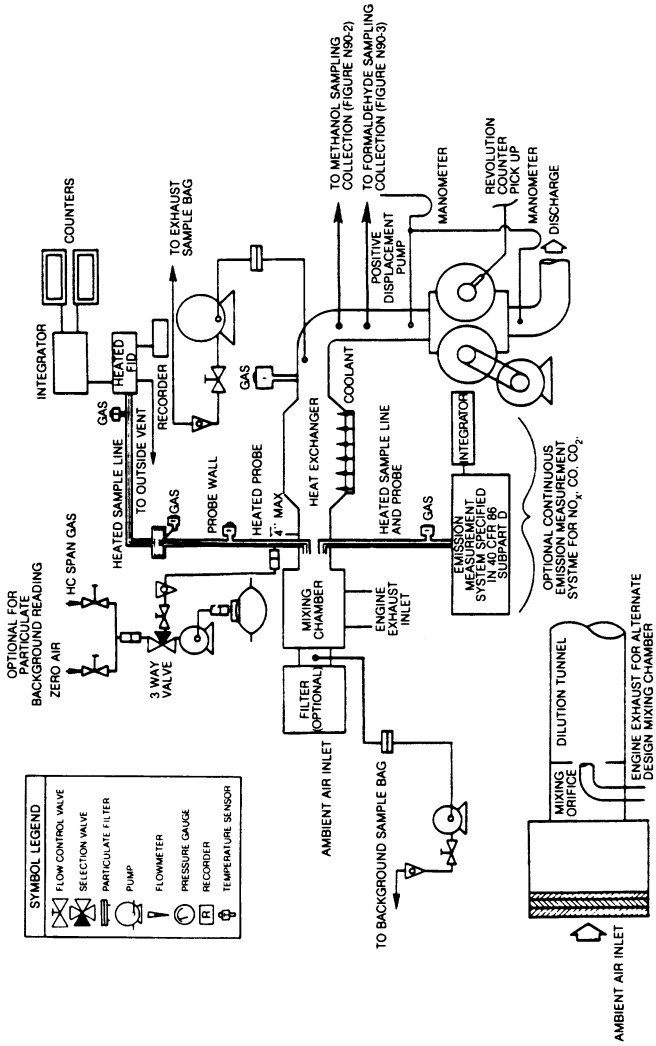

FIGURE N90-7 GASEOUS EMISSIONS SAMPLING SYSTEM (PDP-CVS)

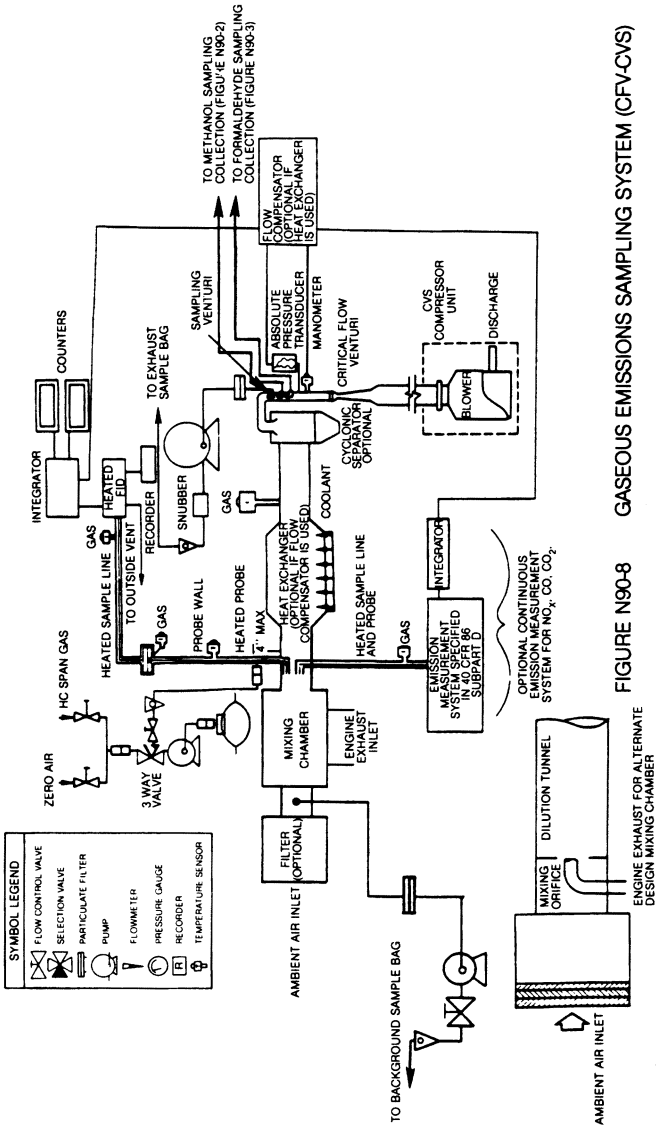

FIGURE N90-8 GASEOUS EMISSIONS SAMPLING SYSTEM (CFV-CVS)

(ii) No other analyzers may draw a sample from the continuous HC sample probe, line or system, unless a common sample pump is used for all analyzers and the sample line system design reflects good engineering practice.

(iii) The overflow gas flow rates into the sample line shall be at least 105 percent of the sample system flow rate.

(iv) The overflow gases shall enter the heated sample line as close as practicable to the outside surface of the CVS duct or dilution tunnel.

(v) The continuous HC sampling system shall consist of a probe (which must raise the sample to the specified temperature) and, where used, a sample transfer system (which must maintain

the specified temperature). The continuous hydrocarbon sampling system (exclusive of the probe) shall:

(A) Maintain a wall temperature of 464K ±11K (191 °C ±11 °C) as measured at every separately controlled heated component (i.e., filters, heated line sections), using permanent thermocouples located at each of the separate components.

(B) Have a wall temperature of 464K ±11K (191 °C ±11 °C) over its entire length. The temperature of the system shall be demonstrated by profiling the thermal characteristics of the system at initial installation and after any major maintenance performed on the system. The temperature profile of the HC sampling system shall be demonstrated by inserting thermocouple wires (typically Teflon® coated for ease of insertion) into the sampling system assembled in-situ where possible, using good engineering judgement. The wire should be inserted up to the HFID inlet. Stabilize the sampling system heaters at normal operating temperatures. Withdraw the wires in increments of 5 cm to 10 cm (2 inches to 4 inches) including all fittings. Record the stabilized temperature at each position. The system temperature will be monitored during testing at the locations and temperature described in § 86.1310–90(b)(v)(A). Comment: It is understood that profiling of the sample line can be done under flowing conditions also as required with the probe.

(C) Maintain a gas temperature of 464K ±11K (191 °C ±11 °C) immediately before the heated filter and HFID. These gas temperatures will be determined by a temperature sensor located immediately upstream of each component.

(vi) The continuous hydrocarbon sampling probe shall:

(A) Be defined as the first 25.4 cm (10 in) to 76.2 cm (30 in) of the continuous hydrocarbon sampling system.

(B) Have a 0.483 cm (0.19 in) minimum inside diameter.

(C) Be installed in the primary dilution tunnel at a point where the dilution air and exhaust are well mixed (i.e., approximately 10 tunnel diameters downstream of the point where the exhaust enters the dilution tunnel).

(D) Be sufficiently distant (radially) from other probes and the tunnel wall so as to be free from the influence of any wakes or eddies.

(E) Increase the gas stream temperature to 464K ±11K (191 °C ±11 °C) by the exit of the probe. The ability of the probe to accomplish this shall be demonstrated at typical sample flow rates using the insertion thermocouple technique at initial installation and after any major maintenance. Compliance with the temperature specification shall be demonstrated by monitoring during each test the temperature of either the gas stream or the wall of the sample probe at its terminus.

(vii) The response time of the continuous measurement system shall be no greater than:

(A) 1.5 seconds from an instantaneous step change at the port entrance to the analyzer to within 90 percent of the step change.

(B) 20 seconds from an instantaneous step change at the entrance to the sample probe or overflow span gas port to within 90 percent of the step change. Analysis system response time shall be coordinated with CVS flow fluctuations and sampling time/test cycle offsets if necessary.

(C) For the purpose of verification of response times, the step change shall be at least 60 percent of full-scale chart deflection.

(4) *Primary-dilution tunnel.* (i) The primary dilution tunnel shall be:

(A) Small enough in diameter to cause turbulent flow (Reynolds Number greater than 4000) and of sufficient length to cause complete mixing of the exhaust and dilution air;

(B) At least 18 inches (46 cm) in diameter with a single-dilution system or at least 8 inches (20 cm) in diameter with a double-dilution system;

(C) Constructed of electrically conductive material which does not react with the exhaust components; and

(D) Electrically grounded.

(ii) The temperature of the diluted exhaust stream inside of the primary dilution tunnel shall be sufficient to prevent water condensation.

(iii) The engine exhaust shall be directed downstream at the point where it is introduced into the primary dilution tunnel.

(5) *Continuously integrated NO_X, CO, and CO_2 measurement systems.* (i) The sample probe shall:

(A) Be in the same plane as the continuous HC probe, but shall be sufficiently distant (radially) from other probes and the tunnel wall so as to be free from the influences of any wakes or eddies.

(B) Heated and insulated over the entire length, to prevent water condensation, to a minimum temperature of 131 °F (55 °C). Sample gas temperature immediately before the first filter in the system shall be at least 131 °F (55 °C).

(ii) The continuous NO_X, CO, or CO_2 sampling and analysis system shall conform to the specifications of 40 CFR part 86, subpart D, with the following exceptions and revisions:

(A) The system components required to be heated by subpart D need only be heated to prevent water condensation, the minimum component temperature shall be 131 °F (55 °C).

(B) The system response defined in § 86.329–79 shall be no greater than 20 seconds. Analysis system response time shall be coordinated with CVS flow fluctuations and sampling time/test cycle offsets, if necessary.

(C) Alternative NO_X measurement techniques outlined in § 86.346–79 are not permitted for NO_X measurement in this subpart.

(D) All analytical gases shall conform to the specifications of § 86.1314.

(E) Any range on a linear analyzer below 155 ppm shall have and use a calibration curve conforming to § 86.330–79.

(F) The measurement accuracy requirements specified in § 86.338–79 are superseded by those specified in § 86.1338.

(iii) The chart deflections or voltage output of analyzers with non-linear calibration curves shall be converted to concentration values by the calibration curve(s) specified in subpart D (§ 86.330–79) before flow correction (if used) and subsequent integration takes place.

(6) *Particulate sampling system.* The particulate collection system must be configured in either of two ways. The single-dilution method collects a proportional sample from the primary tunnel, and then passes this sample through the collection filter. The double-dilution method collects a proportional sample from the primary tunnel, and then transfers this sample to a secondary dilution tunnel where the sample is further diluted; the double-diluted sample is then passed through the collection filter. Proportionality (i.e., mass flow ratio) between the primary tunnel flow rate and the sample flow rate must be maintained within ±5 percent. The requirements for these two systems are:

(i) *Single dilution method.* (A) The particulate sample probe shall be:

(*1*) Installed facing upstream at a point where the dilution air and exhaust air are well mixed (*i.e.*, on the primary tunnel centerline, approximately 10 tunnel diameters downstream of the point where the exhaust enters the primary dilution tunnel).

(*2*) Sufficiently distant (radially) from other sampling probes so as to be free from the influence of any wakes or eddies produced by the other probes.

(*3*) 0.5 in. (1.3 cm) minimum inside diameter.

(*4*) The distance from the sampling tip to the filter holder shall be at least 5 probe diameters for filters located inside the primary dilution tunnel, and not more than 40 inches (102 cm) for filters located outside the primary dilution tunnel.

(*5*) Designed to minimize the deposition of particulate in the probe (*i.e.*, bends should be as gradual as possible, protrusions (due to sensors, etc.) should be smooth and not sudden, etc.).

(B) The particulate sample pump(s) shall be located sufficiently distant from the dilution tunnel so that the inlet gas temperature is maintained at a constant temperature (±5 °F (±2.8 °C)) if flow compensation is not used.

(C) The gas meters or flow instrumentation shall be located sufficiently distant from the tunnel so that the inlet gas temperature remains constant (±5 °F (±2.8 °C)) if flow compensation is not used.

(D) Other sample flow handling and/or measurement systems may be used if shown to yield equivalent results and if approved in advance by the Administrator.

(ii) *Double-dilution method.* (A) The particulate sample transfer tube shall be configured and installed so that:

(*1*) The inlet faces upstream in the primary dilution tunnel at a point where the primary dilution air and exhaust are well mixed (*i.e.*, on the primary tunnel centerline, approximately 10 tunnel diameters downstream of the point where the exhaust enters the primary dilution tunnel).

(*2*) The particulate sample exits on the centerline of the secondary tunnel and points downstream.

(B) The particulate sample transfer tube shall be:

(*1*) Sufficiently distant (radially) from other sampling probes (in the primary dilution tunnel) so as to be free from the influence of any wakes or eddies produced by the other probes.

(*2*) 0.5 in (1.3 cm) minimum inside diameter.

(*3*) No longer than 36 in (91 cm) from inlet plane to exit plane.

(*4*) Designed to minimize the deposition of particulate during transfer (*i.e.*, bends should be as gradual as possible, protrusions (due to sensors, etc.) should be smooth and not sudden, etc.).

(*5*) Constructed of electrically conductive material which does not react with the exhaust components, and electrically grounded.

(C) The secondary dilution air shall be at a temperature of 77°±9 °F (25°±5 °C). For the first 10 seconds this specification is 77°±20 °F (25°±11 °C).

(D) The secondary-dilution tunnel shall be:

(*1*) 3.0 inches (7.6 cm) minimum inside diameter.

(*2*) Of sufficient length so as to provide a residence time of at least 0.25 seconds for the double-diluted sample.

(*3*) Constructed of electrically conductive material which does not react with the exhaust components, and electrically grounded.

(E) Additional dilution air must be provided so as to maintain a sample temperature of 125 °F (51.7 °C) or less immediately before the primary sample filter.

(F) The primary filter holder shall be located within 12.0 in (30.5 cm) of the exit of the secondary dilution tunnel.

(G) Other sample flow handling and/or measurement systems may be used if shown to yield equivalent results and if approved in advance by the Administrator.

(7) *Particulate sampling filters.* (i) Fluorocarbon-coated glass fiber filters or fluorocarbon-based (membrane) filters are required.

(ii) Particulate filters must have a minimum diameter of 70 mm (60 mm stain diameter). Larger diameter filters are acceptable.

(iii) The dilute exhaust will be simultaneously sampled by a pair of filters (one primary and one back-up filter) during the cold-start test and by a second pair of filters during the hot-start test. The back-up filter holder shall be located no more than 4 inches (10 cm) downstream of the primary filter holder. The primary and back-up filters shall not be in contact with each other.

(iv) It is recommended that the filter loading should be maximized consistent with other temperature requirements and the requirement to avoid moisture condensation. A filter pair loading of 1 mg is typically proportional to a 0.1 g/bhp-hr emission level. All particulate filters, reference filters, and background filters shall be handled in pairs during all weighing operations for emissions testing.

(8) *Methanol sampling system.* The methanol sampling system, shown in Figure N90–2, consists of impingers (or sample collection capsules) containing known volumes of deionized water and sampling pump to draw the proportional sample through the impingers.

(9) *Formaldehyde sampling system.* The formaldehyde sampling system, Figure N90–3, consists of sample collection impingers and sampling pump to draw the proportional sample through the impingers.

[54 FR 14578, Apr. 11, 1989, as amended at 59 FR 48525, Sept. 21, 1994; 60 FR 34370, June 30, 1995; 62 FR 47124, Sept. 5, 1997]

§ 86.1310–2007 Exhaust gas sampling and analytical system for gaseous emissions from heavy-duty diesel-fueled engines and particulate emissions from all engines.

(a) *General.* The exhaust gas sampling system described in this paragraph is designed to measure the true mass of both gaseous and particulate emissions in the exhaust of heavy-duty diesel engines, and particulate emissions in the exhaust of all heavy-duty engines.

(Gaseous emissions from non-petroleum-fueled diesel engines are measured using the system described in § 86.1309.) This system utilizes the CVS concept (described in § 86.1309) of measuring the combined mass emissions of THC, NO_X, CH_4 (if applicable) CO, CO_2 and particulate matter. For all emission measurement systems described in this section, multiple or redundant systems may be used during a single test. Statistical averages of data from multiple systems may be used to calculate test results, consistent with good engineering judgment. Weighted averages are allowed, where appropriate Statistical outliers may be discarded, but all results must be reported. If the Administrator determines that the statistical analysis is not consistent with good engineering judgment, he/she may determine compliance from the arithmetic mean of the results. A continuously integrated system may be used for THC, NO_X , CO and CO_2 measurement. The use of proportional bag sampling for sample integration is allowed for THC, NO_X, CO, and CO_2 measurement, but requirements specific to bag sampling from diesel exhaust must be met for the THC and NO_X emissions measurements. CH_4 measurement for calculation of NMHC (if applicable) is measured using GC-FID analysis of a proportional bag sample. The mass of gaseous emissions is determined from the sample concentration and total flow over the test period. The mass of particulate emissions is determined from a proportional mass sample collected on a filter and from the sample flow and total flow over the test period. As an option, the measurement of total fuel mass consumed over a cycle may be substituted for the exhaust measurement of CO_2. General requirements are as follows:

(1) This sampling system requires the use of a CVS The CVS system may use a PDP or a CFV. PDP systems must use a heat exchanger. CFV systems may use either a heat exchanger or electronic flow compensation. When electronic flow compensation is used, the CFV may be replaced by a subsonic venturi (SSV) as long as the CVS concept as defined in § 86.1309 is maintained (i.e., a constant volumetric flow-rate through the CVS is maintained for the duration of the test). Figure N07–1 is a schematic drawing of the CVS system.

(2) The THC analytical system for diesel engines requires a heated flame ionization detector (HFID) and heated sample system (191 ±11 °C) using either:

(i) Continuously integrated measurement of diluted THC meeting the minimum requirements and technical specifications contained in paragraph (b)(3) of this section. Unless compensation for varying mass flow is made, a constant mass flow system must be used to ensure a proportional sample; or

(ii) Heated (191 ±11 °C) proportional bag sampling systems for hydrocarbon measurement will be allowed if the bag sampling system meets the performance specifications for outgassing and permeability as defined in paragraph (b)(2) of this section.

(3) CH_4 measurement, if applicable, shall be conducted using a proportional bag sampling system with subsequent analysis using a gas chromatograph and FID. The CH_4 measurement shall be done in accordance with SAE Recommended Practice J1151, ''Methane Measurement Using Gas Chromatography'' (1994 SAE Handbook, Volume 1: Materials, Fuels, Emissions, and Noise, Section 13, Page 13.170), which is incorporated by reference pursuant to § 86.1(b)(2). As an alternative, the manufacturer may choose one of the options set forth in § 86.004–28(c)(8).

(4)–(5) [Reserved]

(6) The CO and CO_2 analytical system requires:

(i) Bag sampling (§ 86.1309) and analytical (§ 86.1311) capabilities, as shown in Figure N07–1; or

(ii) Continuously integrated measurement of diluted CO and CO_2 meeting the minimum requirements and technical specifications contained in paragraph (b)(5) of this section. Unless compensation for varying flow is made, a constant flow system must be used to ensure a proportional sample; and

(7) The NO_X analytical system requires:

(i) Continuously integrated measurement of diluted NO_X meeting the minimum requirements and technical specifications contained in paragraph (b)(5) of this section. Unless compensation for varying flow is made, a constant

flow system must be used to ensure a proportional sample.

(ii) Bag sampling (§86.1309) and analytical (§86.1311) capabilities, as shown in Figure N07–1 (or Figure 07–2) will be allowed provided that sample gas temperature is maintained above the sample's aqueous dewpoint at all times during collection and analysis.

(8) The mass of particulate in the exhaust is determined via filtration. The particulate sampling system requires dilution of the exhaust to a temperature of 47 °C ±5 °C, measured upstream of a single high-efficiency sample filter (as close to the filter as practical).

(9) Since various configurations can produce equivalent results, exact conformance with these drawings is not required. Additional components such as instruments, valves, solenoids, pumps, and switches may be used to provide additional information and coordinate the functions of the components of the system. Other components, such as snubbers, which are not needed to maintain accuracy on some systems, may be excluded if their exclusion is based upon good engineering judgment.

(10) Other sampling and/or analytical systems may be used if shown to yield equivalent results and if approved in advance by the Administrator (see §86.1306–07).

(b) *Component description*. The components necessary for exhaust sampling shall meet the following requirements:

(1) *Exhaust dilution system*. The CVS shall conform to all of the requirements listed for the exhaust gas CVS systems in §86.1309(b), (c), and (d). With respect to PM measurement, the intent of this measurement procedure is to perform the sample cooling primarily via dilution and mixing with air rather than via heat transfer to the surfaces of the sampling system. In addition the CVS must conform to the following requirements:

(i) The flow capacity of the CVS must be sufficient to maintain the diluted exhaust stream at the temperatures required for the measurement of particulate and hydrocarbon emission noted below and at, or above, the temperatures where aqueous condensation in the exhaust gases could occur. This is achieved by the following method. The flow capacity of the CVS must be sufficient to maintain the diluted exhaust stream in the primary dilution tunnel at a temperature of 191 °C or less at the sampling zone and as required to prevent condensation at any point in the dilution tunnel. Gaseous emission samples may be taken directly from this sampling point. An exhaust sample must then be taken at this point to be diluted a second time for use in determining particulate emissions. The secondary dilution system must provide sufficient secondary dilution air to maintain the double-diluted exhaust stream at a temperature of 47 C ±5 C, measured at a point located between the filter face and 16 cm upstream of the filter face.

(ii) For the CVS , either a heat exchanger (*i.e.* CFV-CVS) or electronic flow compensation (*i.e.* EFC-CFV-CVS), which also includes the particulate sample flows is required Refer to Figure N07–1.

(iii) When a heat exchanger is used, the gas mixture temperature, measured at a point immediately ahead of the critical flow venturi, shall be within ±11 °C of the average operating temperature observed during the test with the simultaneous requirement that aqueous condensation does not occur. The temperature measuring system (sensors and readout) shall have an accuracy and precision of ±1.9 °C. For systems utilizing a flow compensator to maintain proportional sampling, the requirement for maintaining constant temperature is not necessary.

(iv) The primary dilution air and secondary dilution air:

(A) Shall have a primary and secondary dilution air temperature equal to or greater than 15 °C.

(B) Primary dilution air shall be filtered at the dilution air inlet. The manufacturer of the primary dilution air filter shall state that the filter design has successfully achieved a minimum particle removal efficiency of 98% (less than 0.02 penetration) as determined using ASTM test method F 1471–93 (incorporated by reference at section 86.1). Secondary dilution air shall be filtered at the dilution air inlet using a high-efficiency particulate air filter (HEPA). The HEPA filter manufacturer shall state the HEPA filter design has successfully achieved a

minimum particle removal efficiency of 99.97% (less than 0.0003 penetration) as determined using ASTM test method F 1471–93. It is recommended that the primary dilution air be filtered using a HEPA filter. EPA intends to utilize HEPA filters to condition primary dilution air in its test facilities. It is acceptable to use of a booster blower upstream or downstream of a HEPA filter in the primary dilution tunnel (and upstream of the introduction of engine exhaust into the CVS) to compensate for the additional pressure loss associated with the filter. The design of any booster blower located downstream of the filter should minimize the introduction of additional particulate matter into the CVS.

(C) Primary dilution air may be sampled to determine background particulate levels, which can then be subtracted from the values measured in the diluted exhaust stream. In the case of primary dilution air, the background particulate filter sample shall be taken immediately downstream of the dilution air filter and upstream of the engine exhaust flow (Figure N07–1). The provisions of paragraphs (b)(7) of this section, and of § 86.1312–2007 also apply to the measurement of background particulate matter, except that the filter temperature must be maintained below 52 °C.

(2) *Heated proportional bag sampling systems.* If a heated (191 ±11 °C) proportional bag sampling system is used for THC measurement, sample bags must demonstrate minimal outgassing and permeability by passing the following performance test:

(i) Performance test for sample bag HC outgassing and CO_2 permeability. Bring the bag system to its operational temperature. Fill the heated sample bag with a nominal mixture of 1% CO_2 in N_2. Perform an initial measurement of CO_2 and THC from the sample bag, and repeat the measurement after one hour. Acceptable performance criteria are <2% decrease of the initial CO_2 reading and <1 ppmC THC.

(ii) [Reserved]

(3) *Continuous HC measurement system.* (i) The continuous HC sample system (as shown in Figure N07–1) uses an ''overflow'' zero and span system. In this type of system, excess zero or span gas spills out of the probe when zero and span checks of the analyzer are made. The ''overflow'' system may also be used to calibrate the HC analyzer per § 86.1321(b), although this is not required.

(ii) No other analyzers may draw a sample from the continuous HC sample probe, line or system, unless a common sample pump is used for all analyzers and the sample line system design reflects good engineering practice.

(iii) The overflow gas flow rates into the sample line shall be at least 105% of the sample system flow rate.

(iv) The overflow gases shall enter the heated sample line as close as practicable to the outside surface of the CVS duct or dilution tunnel.

(v) The continuous HC sampling system shall consist of a probe (which must raise the sample to the specified temperature) and, where used, a sample transfer system (which must maintain the specified temperature). The continuous hydrocarbon sampling system (exclusive of the probe) shall:

(A) Maintain a wall temperature of 191 °C ±11 °C as measured at every separately controlled heated component (*i.e.*, filters, heated line sections), using permanent thermocouples located at each of the separate components.

(B) Have a wall temperature of 191 °C ±11 °C over its entire length. The temperature of the system shall be demonstrated by profiling the thermal characteristics of the system at initial installation and after any major maintenance performed on the system. The temperature profile of the HC sampling system shall be demonstrated by inserting thermocouple wires (typically Teflon™ coated for ease of insertion) into the sampling system assembled insitu where possible, using good engineering judgment. The wire should be inserted up to the HFID inlet. Stabilize the sampling system heaters at normal operating temperatures. Withdraw the wires in increments of 5 cm to 10 cm (2 inches to 4 inches) including all fittings. Record the stabilized temperature at each position. The system temperature will be monitored during testing at the locations and temperature described in § 86.1310–90(b)(3)(v)(A).

NOTE: It is understood that profiling of the sample line can be done under flowing conditions also as required with the probe. This test may be cumbersome if test facilities utilize long transfer lines and many fittings; therefore it is recommended that transfer lines be kept as short as possible and the use of fittings should be kept minimal.

(C) Maintain a gas temperature of 191 °C ±11 °C immediately before the heated filter and HFID. These gas temperatures will be determined by a temperature sensor located immediately upstream of each component.

(vi) The continuous hydrocarbon sampling probe shall:

(A) Be defined as the first 25.4 cm (10 in) to 76.2 cm (30 in) of the continuous hydrocarbon sampling system;

(B) Have a 0.483 cm (0.19 in) minimum inside diameter;

(C) Be installed in the primary dilution tunnel at a point where the dilution air and exhaust are well mixed (*i.e.*, approximately 10 tunnel diameters downstream of the point where the exhaust enters the dilution tunnel);

(D) Be sufficiently distant (radially) from other probes and the tunnel wall so as to be free from the influence of any wakes or eddies; and

(E) Increase the gas stream temperature to 191 °C ±11 °C by the exit of the probe. The ability of the probe to accomplish this shall be demonstrated at typical sample flow rates using the insertion thermocouple technique at initial installation and after any major maintenance. Compliance with the temperature specification shall be demonstrated by monitoring during each test the temperature of either the gas stream or the wall of the sample probe at its terminus.

(vii) The response time of the continuous measurement system shall be no greater than:

(A) 1.5 seconds from an instantaneous step change at the port entrance to the analyzer to within 90 percent of the step change;

(B) 10 seconds from an instantaneous step change at the entrance to the sample probe or overflow span gas port to within 90 percent of the step change. Analysis system response time shall be coordinated with CVS flow fluctuations and sampling time/test cycle offsets if necessary; and

(C) For the purpose of verification of response times, the step change shall be at least 60 percent of full-scale chart deflection.

(4) *Primary-dilution tunnel.* (i) The primary dilution tunnel shall be:

(A) Small enough in diameter to cause turbulent flow (Reynolds Number greater than 4000) and of sufficient length to cause complete mixing of the exhaust and dilution air. Good engineering judgment shall dictate the use of mixing plates and mixing orifices to ensure a well-mixed sample. To verify mixing, EPA recommends flowing a tracer gas (*i.e.* propane or CO_2) from the raw exhaust inlet of the dilution tunnel and measuring its concentration at several points along the axial plane at the sample probe. Tracer gas concentrations should remain nearly constant (*i.e.* within 2%) between all of these points.

(B) At least 8 inches (20 cm) in diameter.

(C) Constructed of electrically conductive material which does not react with the exhaust components.

(D) Electrically grounded.

(E) EPA recommends that the tunnel should have minimal thermal capacitance such that the temperature of the walls tracks with the temperature of the diluted exhaust.

(ii) The temperature of the diluted exhaust stream inside of the primary dilution tunnel shall be sufficient to prevent water condensation.

(iii) The engine exhaust shall be directed downstream at the point where it is introduced into the primary dilution tunnel.

(5) *Continuously integrated NO_X, CO, and CO2 measurement systems.* (i) The sample probe shall:

(A) Be in the same plane as the continuous HC probe, but shall be sufficiently distant (radially) from other probes and the tunnel wall so as to be free from the influences of any wakes or eddies; and

(B) Heated and insulated over the entire length, to prevent water condensation, to a minimum temperature of 131 °F (55 °C). Sample gas temperature immediately before the first filter in the system shall be at least 131 °F (55 °C).

(ii) The continuous NO_X, CO, or CO2 sampling and analysis system shall

conform to the specifications of subpart D of this part, with the following exceptions:

(A) The system components required to be heated by subpart D need only be heated to prevent water condensation, the minimum component temperature shall be 131 °F (55 °C);

(B) The system response defined in § 86.329–79 shall be no greater than 10 seconds. Analysis system response time shall be coordinated with CVS flow fluctuations and sampling time/test cycle offsets, if necessary;

(C) Alternative NO_X measurement techniques outlined in § 86.346–79 are not permitted for NO_X measurement in this subpart;

(D) All analytical gases shall conform to the specifications of § 86.1314;

(E) Any range on a linear analyzer below 100 ppm shall have and use a calibration curve conforming to § 86. 1323–07; and

(F) The measurement accuracy requirements are specified in § 86. 1338–07 .

(iii) The signal output of analyzers with non-linear calibration curves shall be converted to concentration values by the calibration curve(s) specified in subpart D of this part (§ 86.330–79) before flow correction (if used) and subsequent integration takes place.

(6) *Particulate sampling system.* This method collects a proportional sample from the primary tunnel, and then transfers this sample to a secondary dilution tunnel where the sample is further diluted. The double-diluted sample is then passed through the collection filter. Proportionality (i.e., mass flow ratio) between the primary tunnel flow rate and the sample flow rate must be maintained within ±5%, excluding the first 10 seconds of the test at start-up. The requirements for this system are:

(i) The particulate sample transfer tube shall be configured and installed so that:

(A) The inlet faces upstream in the primary dilution tunnel at a point where the primary dilution air and exhaust are well mixed.

(B) The particulate sample exits on the centerline of the secondary tunnel.

(ii) The entire particulate sample transfer tube shall be:

(A) Sufficiently distant (radially) from other sampling probes (in the primary dilution tunnel) so as to be free from the influence of any wakes or eddies produced by the other probes.

(B) 0.85 cm minimum inside diameter.

(C) No longer than 36 in (91 cm) from inlet plane to exit plane.

(D) Designed to minimize the diffusional and thermophoretic deposition of particulate matter during transfer (i.e., sample residence time in the transfer tube should be as short as possible, temperature gradients between the flow stream and the transfer tube wall should be minimized). Double-wall, thin-wall, air-gap insulated, or a controlled heated construction for the transfer tube is recommended.

(E) Constructed such that the surfaces exposed to the sample shall be an electrically conductive material, which does not react with the exhaust components, and this surface shall be electrically grounded so as to minimize electrostatic particulate matter deposition.

(iii) The secondary dilution air shall be at a temperature equal to or greater than 15 °C.

(iv) The secondary-dilution tunnel shall be constructed such that the surfaces exposed to the sample shall be an electrically conductive material, which does not react with the exhaust components, and this surface shall be electrically grounded so as to minimize electrostatic particulate deposition.

(v) Additional dilution air must be provided so as to maintain a sample temperature of 47 °C ±5 °C upstream of the sample filter. Temperature shall be measured with a thermocouple with a 3⁄16″ shank, having thermocouple wires with a gage diameter 24 AWG or smaller, a bare-wire butt-welded junction; or other suitable temperature measurement with an equivalent or faster time constant and an accuracy and precision of ±1.9 °C.

(vi) The filter holder assembly shall be located within 12.0 in (30.5 cm) of the exit of the secondary dilution tunnel.

(vii) The face velocity through the sample filter shall not exceed 100 cm/s (face velocity is defined as the standard volumetric sample flow rate (i.e.,

scm3/sec) divided by the sample filter stain area (i.e., cm2)).

(7) *Particulate sampling*—(i) *Filter specifications*. (A) Polytetrafluoroethylene (PTFE or Teflon™) coated borosilicate glass fiber high-efficiency filters or polytetrafluoroethylene (PTFE or Teflon™) high-efficiency membrane filters with an integral support ring of polymethylpentene (PMP) or equivalent inert material are required. Filters shall have a minimum clean filter efficiency of 99% as measured by the ASTM D2986–95a DOP test (incorporated by reference at §86.1).

(B) Particulate filters must have a diameter of 46.50 ±0.6 mm (38 mm minimum stain diameter).

(C) The dilute exhaust is simultaneously sampled by a single high-efficiency filter during the cold-start test and by a second high efficiency filter during the hot-start test.

(D) It is recommended that the filter loading should be maximized consistent with temperature requirements.

(ii) *Filter holder assembly*. The filter holder assembly shall comply with the specifications set forth for ambient PM measurement in 40 CFR Part 50, Appendix L 7.3.5, figures L–25 and L–26, with the following exceptions:

(A) The material shall be 302, 303, or 304 stainless steel instead of anodized aluminum.

(B) The 2.84 cm diameter entrance to the filter holder may be adapted, using sound engineering judgment and leak-free construction, to an inside diameter no smaller than 0.85 cm, maintaining the 12.5° angle from the inlet of the top filter holder to the area near the sealing surface of the top of the filter cartridge assembly. Figure N07–2 shows acceptable variation from the design in 40 CFR Part 50, Appendix L. Similar variations using sound engineering design are also acceptable provided that they provide even flow distribution across the filter media and a similar leak-free seal with the filter cartridge assembly.

(C) If additional or multiple filter cartridges are stored in a particulate sampler as part of an automatic sequential sampling capability, all such filter cartridges, unless they are installed in the sample flow (with or without flow established) shall be covered or sealed to prevent communication of semi-volatile matter from filter to filter; contamination of the filters before and after sampling; or loss of volatile or semi-volatile particulate matter after sampling.

(iii) *Filter cartridge assembly*. The filter cartridge assembly shall comply with the specifications set forth for ambient PM measurement in 40 CFR Part 50, Appendix L 7.3.5, figures L–27, L–28, and L–29, with the following exceptions:

(A) In addition to the specified Delrin™ material, 302, 303, or 304 stainless steel, polycarbonate or acrylonitrile/butadiene/styrene (ABS) resin, or a combination of these materials may also be used.

(B) A bevel introduced on the inside diameter of the entrance to the filter cartridge, as used by some commercially available automated sequential particulate filter cartridge changers, is also acceptable (see Figure N07–3).

(iv) *Particle preclassifier*. A particle preclassifier shall be installed immediately upstream of the filter holder assembly (N07–1). The purpose of the preclassifier is to remove coarse, mechanically generated particles (e.g., rust from the engine exhaust system or carbon sheared from the sampling system walls) from the sample flow stream while allowing combustion-generated particles to pass through to the filter. The preclassifier may be either an inertial impactor or a cyclonic separator. The preclassifier manufacturer 50% cutpoint particle diameter shall be between 2.5 μm and 10 μm at the volumetric flow rate selected for sampling of particulate matter emissions. Sharpness of cut is not specifically defined, but the preclassifier geometry shall allow at least 99% of the mass concentration of 1 μm particles to pass through the exit of the preclassifier to the filter at the volumetric flow rate selected for sampling particulate matter emissions. Periodic servicing of the preclassifier will be necessary to prevent a buildup of mechanically separated particles. The particle preclassifier may be made integral with the top of the filter holder assembly. The preclassifier may also be made integral with a mixing-tee for introduction of secondary dilution air, thus

replacing the secondary dilution tunnel; provided that the preclassifier provides sufficient mixing.

Figures to § 86.1310-2007

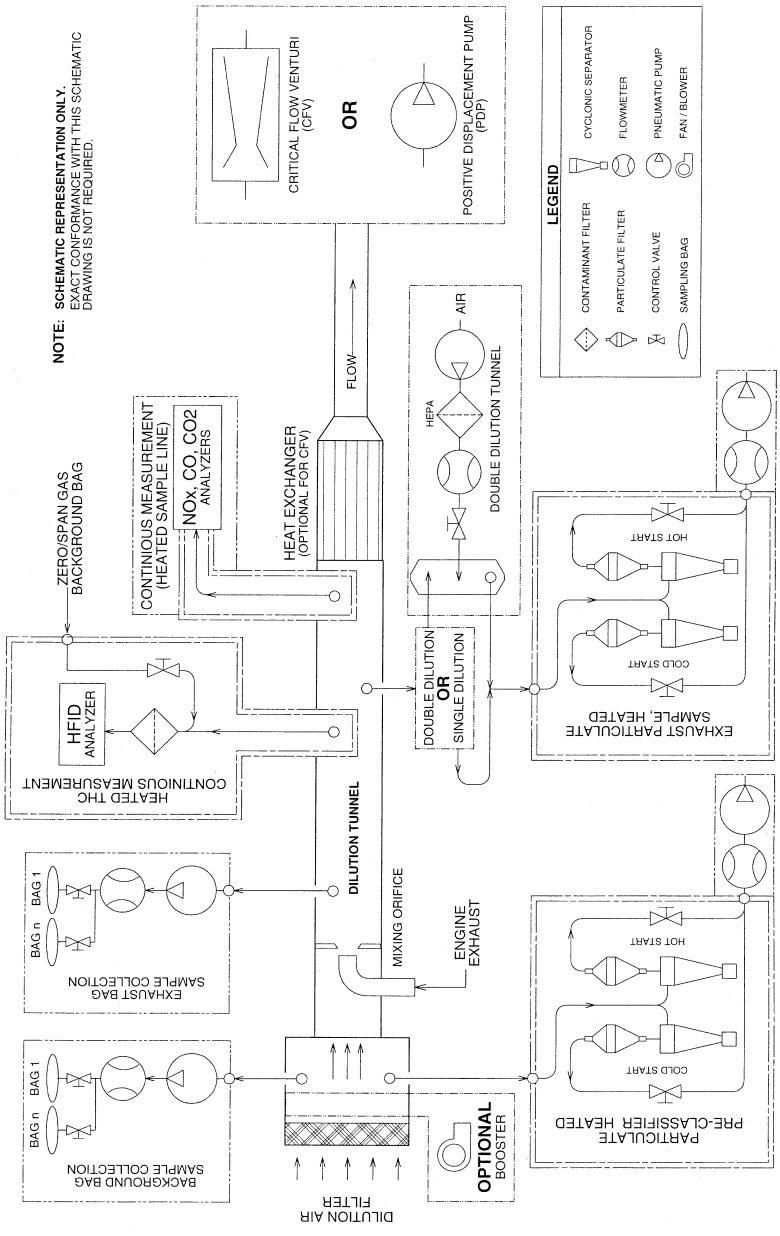

N07-1 GASEOUS AND PARTICULATE EMISSIONS SAMPLING SYSTEM (PDP - CFV CONSTANT VOLUME SAMPLER)

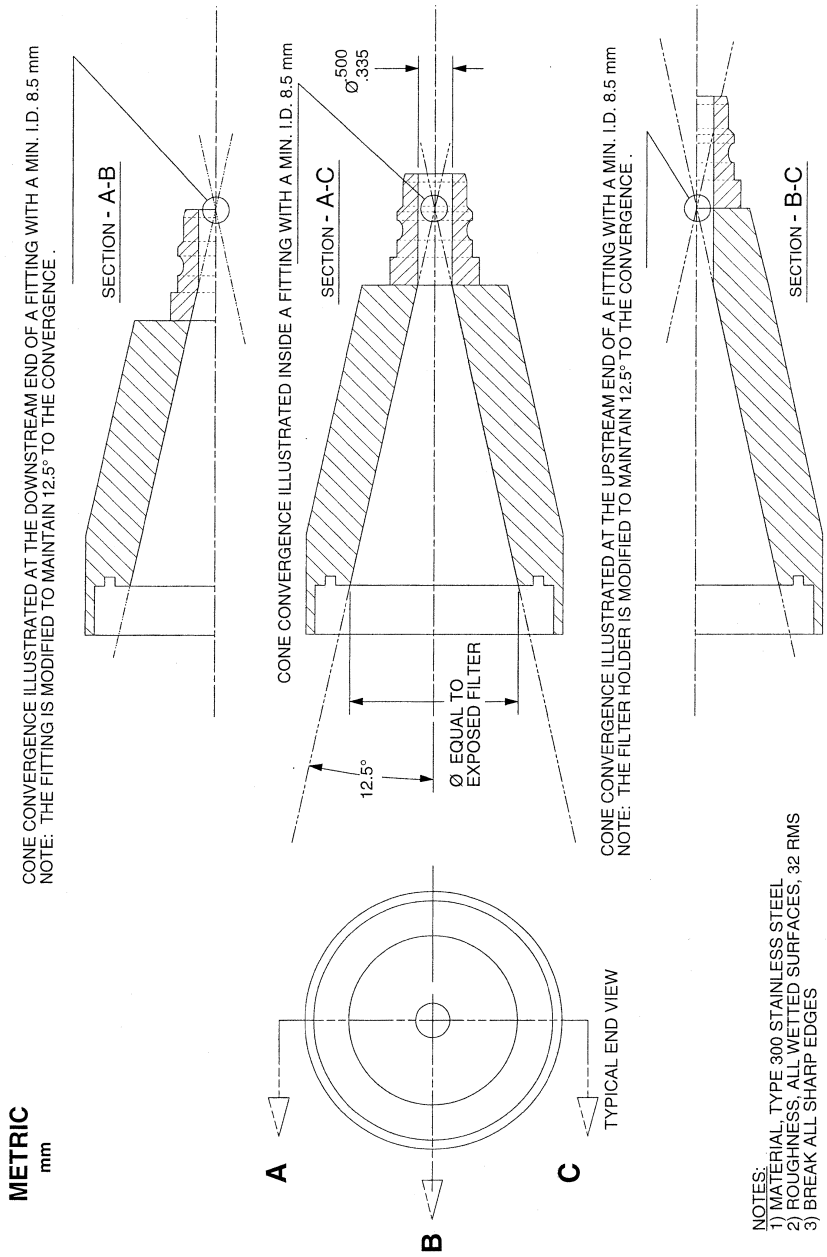

N07-2 FILTER HOLDER GEOMETRY

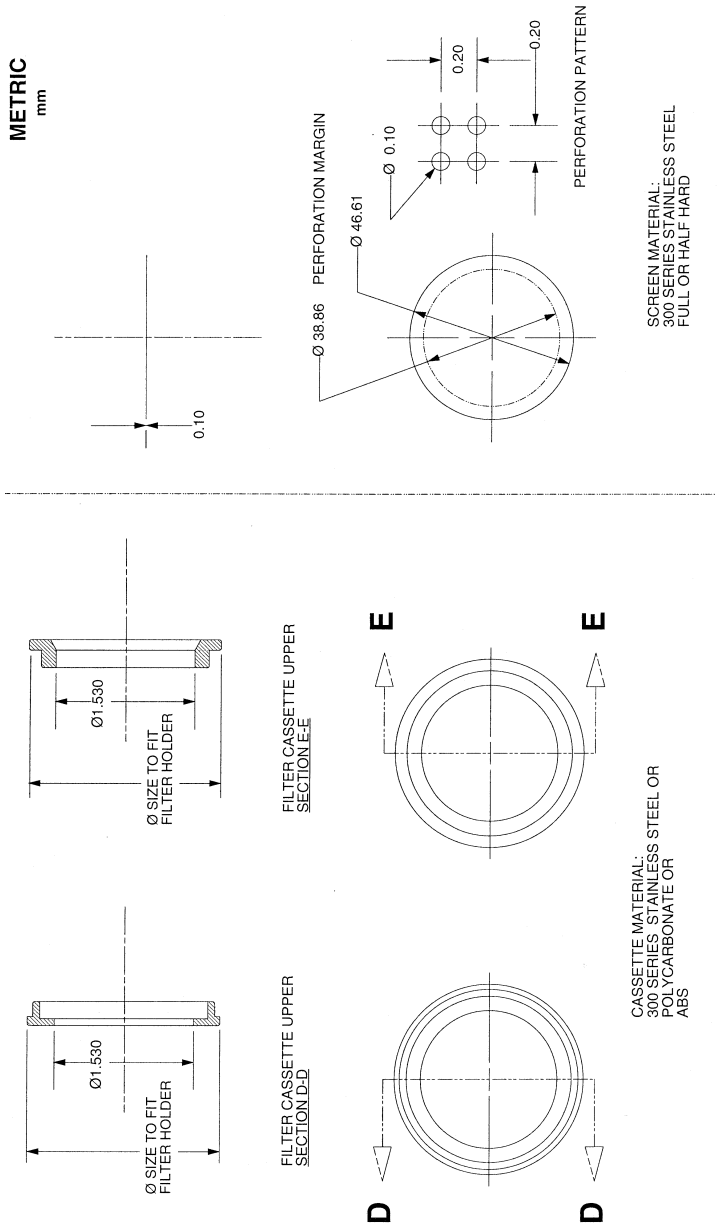

N07-3 FILTER CASSETTE AND SCREEN

[66 FR 5169, Jan. 18, 2001]

§ 86.1311–90 Exhaust gas analytical system; CVS bag sample.

(a) *Schematic drawings*. Figure N90–9 is a schematic drawing of the exhaust gas analytical system used for analyzing CVS bag samples from either Otto-cycle or diesel engines. Since various configurations can produce accurate results, exact conformance with the drawing is not required. Additional components such as instruments, valves, solenoids, pumps and switches may be used to provide additional information and coordinate the functions of the component systems. Other components such as snubbers, which are not needed to maintain accuracy in some systems, may be excluded if their exclusion is based upon good engineering judgment.

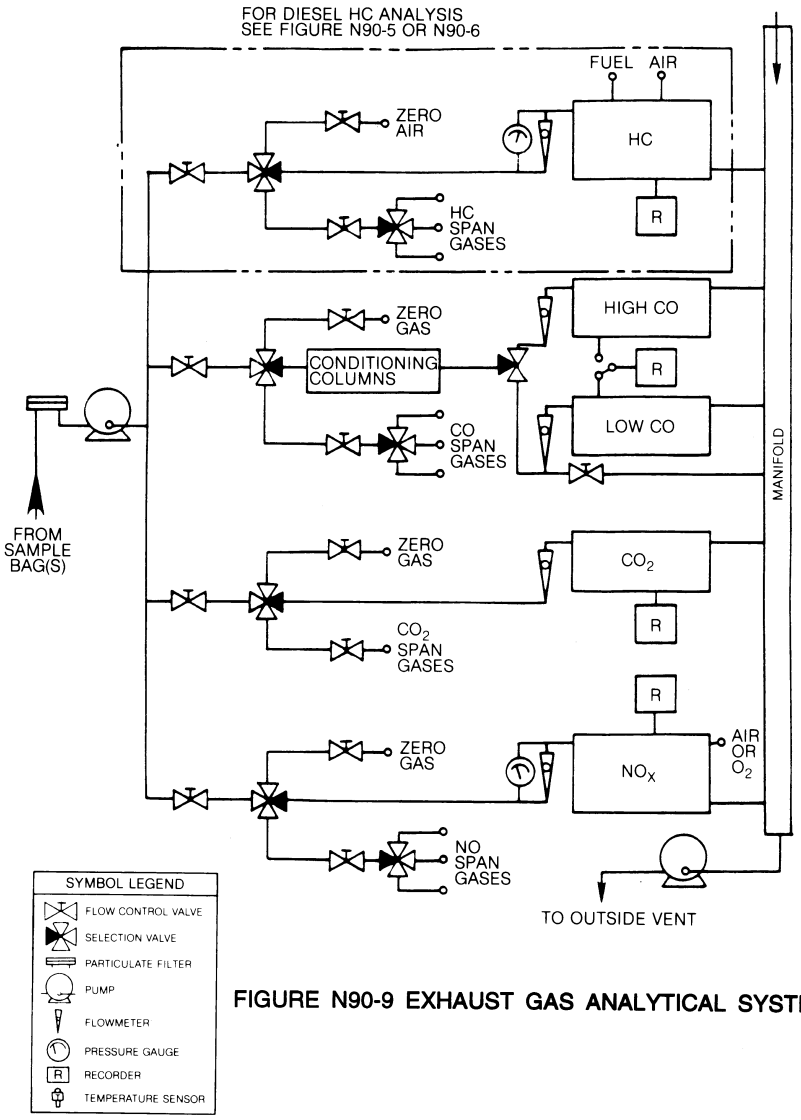

FIGURE N90-9 EXHAUST GAS ANALYTICAL SYSTEM

(b) *Major component description.* The analytical system, Figure N90–9, consists of a flame ionization detector (FID) (heated for methanol-fueled (235±15 °F (113±8 °C)) and for petroleum-fueled diesel (375 °±10 °F (191 °±6 °C) engines) for the measurement of hydrocarbons, nondispersive infrared analyzers (NDIR) for the measurement of carbon monoxide and carbon dioxide, and a chemiluminescence analyzer (CL) for the measurement of oxides of nitrogen. The analytical system for methanol consists of a gas chromatograph (GC), equipped with a flame ionization detector. The analysis for formaldehyde is performed using high pressure liquid chromatography (HPLC) of 2,4-

dinitrophenylhydrazine (DNPH) derivatives using ultraviolet (UV) detection. The exhaust gas analytical system shall conform to the following requirements:

(1) The CL requires that the nitrogen dioxide present in the sample be converted to nitric oxide before analysis. Other types of analyzers may be used if shown to yield equivalent results and if approved in advance by the Administrator.

(2) The carbon monoxide (NDIR) analyzer may require a sample conditioning column containing $CaSO_4$, or dessicating silica gel to remove water vapor, and containing ascarite to remove carbon dioxide from the CO analysis stream.

(i) If CO instruments are used which are essentially free of CO_2 and water vapor interference, the use of the conditioning column may be deleted. (*See* §§ 86.1322 and 86.1342.)

(ii) A CO instrument will be considered to be essentially free of CO_2 and water vapor interference if its response to a mixture of 3 percent CO_2 in N_2. which has been bubbled through water at room temperature, produces an equivalent CO response, as measured on the most sensitive CO range, which is less than 1 percent of full scale CO concentration on ranges above 300 ppm full scale or less than 3 ppm on ranges below 300 ppm full scale. (*See* § 86.1322.)

(c) *Alternate analytical systems.* Analysis systems meeting the specifications of 40 CFR part 86 subpart D may be used for testing required under this subpart, with the exception of §§ 86.346 and 86.347, provided that the subpart D systems meet the specifications of this subpart. Heated analyzers may be used in their heated configuration.

(d) *Other analyzers and equipment.* Other types of analyzers and equipment may be used if shown to yield equivalent results and if approved in advance by the Administrator.

[54 FR 14578, Apr. 11, 1989]

§ 86.1311–94 Exhaust gas analytical system; CVS bag sample.

(a) *Schematic drawings.* Figure N94–1 is a schematic drawing of the exhaust gas analytical system used for analyzing CVS bag samples from either Otto-cycle or diesel engines. Since various configurations can produce accurate results, exact conformance with the drawing is not required. Additional components such as instruments, valves, solenoids, pumps and switches may be used to provide additional information and coordinate the functions of the component systems. Other components such as snubbers, which are not needed to maintain accuracy in some systems, may be excluded if their exclusion is based upon good engineering judgment.

(b) *Major component description.* The analytical system, Figure N94–1, consists of a flame ionization detector (FID) (heated for methanol-fueled (235 ±15 °F (113 ±8 °C)) and for petroleum-fueled diesel (375 ±10 °F (191 ±6 °C) engines) for the measurement of hydrocarbons, a methane analyzer (consisting of a gas chromatograph combined with a FID) for the determination of CH_4 (for engines subject to NMHC standards, where applicable), nondispersive infrared analyzers (NDIR) for the measurement of carbon monoxide and carbon dioxide, and a chemiluminescence analyzer (CL) for the measurement of oxides of nitrogen. The analytical system for methanol consists of a gas chromatograph (GC), equipped with a flame ionization detector. The analysis for formaldehyde is performed using high pressure liquid chromatography (HPLC) of 2,4-dinitrophenylhydrazine (DNPH) derivatives using ultraviolet (UV) detection. The exhaust gas analytical system shall conform to the following requirements:

(1) The CL requires that the nitrogen dioxide present in the sample be converted to nitric oxide before analysis. Other types of analyzers may be used if shown to yield equivalent results and if approved in advance by the Administrator.

(2) The carbon monoxide (NDIR) analyzer may require a sample conditioning column containing $CaSO_4$ or desiccating silica gel to remove water vapor, and containing ascarite to remove carbon dioxide from the CO analysis stream.

(i) If CO instruments are used which are essentially free of CO_2 and water vapor interference, the use of the conditioning column may be deleted (see §§ 86.1322 and 86.1342).

(ii) A CO instrument will be considered to be essentially free of CO_2 and water vapor interference if its response to a mixture of three percent CO_2 in N_2. which has been bubbled through water at room temperature, produces an equivalent CO response, as measured on the most sensitive CO range, which is less than one percent of full scale CO concentration on ranges above 300 ppm full scale or less than 3 ppm on ranges below 300 ppm full scale (see § 86.1322).

(3)(i) Using a methane analyzer consisting of a gas chromatograph combined with a FID, the measurement of methane shall be done in accordance with SAE Recommended Practice J1151, ''Methane Measurement Using Gas Chromatography.'' (Incorporated by reference pursuant to § 86.1(b)(2).)

(ii) For natural gas vehicles, the manufacturer has the option of using gas chromatography to measure NMHC through direct quantitation of individual hydrocarbon species. The manufacturer shall conform to standard industry practices and use good engineering judgement.

(c) *Alternate analytical systems.* Analysis systems meeting the specifications of subpart D of this part may be used for testing required under this subpart, with the exception of §§ 86.346 and 86.347, provided that the systems in subpart D of this part meet the specifications of this subpart. Heated analyzers may be used in their heated configuration.

(d) *Other analyzers and equipment.* Other types of analyzers and equipment may be used if shown to yield equivalent results and if approved in advance by the Administrator.

[59 FR 48525, Sept. 21, 1994, as amended at 59 FR 50073, Sept. 30, 1994; 61 FR 127, Jan. 3, 1996; 62 FR 54730, Oct. 21, 1997]

§ 86.1312–88 Weighing chamber and microgram balance specifications.

(a) *Ambient conditions*—(1) *Temperature.* The ambient temperature of the chamber (or room) in which the particulate filters are conditioned and weighed shall be maintained at 295 K ±3 K (22 °C ±3 °C) during all filter conditioning and weighing.

(2) *Humidity.* The humidity of the chamber (or room) in which the particulate filters are conditioned and weighed shall be maintained at a dew point temperature of 282.5 K ±3 K (9.4 °C ±3 °C) and a relative humidity of 45% ±8%. Either the dew point temperature or the relative humidity or both may be averaged over the preceding 10 minute period on a moving average basis.

(3) The chamber (or room) environment shall be free of any ambient contaminates (such as dust) that would settle on the particulate filters during their stabilization. It is required that at least two unused reference filter pairs remain in the weighing room at all times in covered (to reduce dust contamination) but unsealed (to permit humidity exchange) petri dishes. These reference filter pairs shall be placed in the same general area as the sample filters. These reference filter pairs shall be weighed within 4 hours of, but preferably at the same time as, the sample filter pair weighings.

(4) If the average weight of the reference filter pairs changes between sample filter weighings by more than 40 micrograms, then all sample filters and background filters in the process of stabilization shall be discarded and the emissions tests repeated.

(5) If the room (or chamber) environmental conditions are not met, then the filters shall remain in the conditioning room for at least one hour after correct conditions are met prior to weighing.

(6) The reference filter pairs shall be changed at least once a month, but never between clean and used weighings of a given sample filter pairs. More than one set of reference filter pair may be used. The reference filters shall be the same size and material as the sample filters.

(b) *Weighing balance specifications.* The microgram balance used to determine the weights of all filters shall have a precision (standard deviation) of 20 micrograms and readability of 10 micrograms.

(Secs. 202, 203, 206, 207, 208, 301a, Clean Air Act, as amended; 42 U.S.C. 7521, 7522, 7525, 7541, 7542, 7601a)

[50 FR 10702, Mar. 15, 1985, as amended at 52 FR 47871, Dec. 16, 1987; 62 FR 47124, Sept. 5, 1997]

§86.1312–2007 Filter stabilization and microbalance workstation environmental conditions, microbalance specifications, and particulate matter filter handling and weighing procedures.

(a) *Ambient conditions for filter stabilization and weighing*—(1) *Temperature and humidity*. (i) The filter stabilization environment shall be maintained at 22 °C ±3 °C and a dewpoint of 9.5 °C ±1 °C. Dewpoint shall be measured with an instrument that exhibits an accuracy of at least ±0.25 °C NIST traceable as stated by the instrument manufacturer. Temperature shall be measured with an instrument that exhibits an accuracy of at least ±0.2 °C or better.

(ii) The immediate microbalance workstation environment shall be maintained at 22 °C ±1 °C and a dewpoint of 9.5 °C ±1 °C. If the microbalance workstation environment freely circulates with the filter stabilization environment, and this entire environment meets 22 °C ±1 °C and a dewpoint of 9.5 °C ±1 °C , then there is no requirement to measure temperature and dewpoint at the microbalance separate from the filter stabilization location. Otherwise, temperature at the microbalance workstation shall be measured with an instrument that exhibits an accuracy of at least ±0.2 °C or better, and dewpoint shall be measured with an instrument that exhibits an accuracy of at least ±0.25 °C NIST traceable as stated by the instrument manufacturer.

(2) *Cleanliness*. (i) The microbalance and filter stabilization environments shall be free of ambient contaminants (such as dust or other aerosols) that could settle on the particulate filters. It is recommended that these environments be built to conform with the Class 1000 specification (or cleaner) as determined by Federal Standard 209D or 209E for clean room classification (Available from the Institute of Environmental Standards and Technology website at *www.iest.org* or phone (847) 255–1561). An alternative recommendation would be to equilibrate and/or weigh the filters within a separate, smaller, particle-free, temperature and humidity-controlled chamber (*i.e.*, ''glove box'').

(ii) Reference filters shall be used to monitor for gross particle contamination. It is required that at least two unused reference filters remain in the filter stabilization environment at all times in partially covered glass petri dishes, as in paragraph (c) (1) of this section. These reference filters shall be placed in the filter stabilization environment. The reference filters shall be weighed within 2 hours of, but preferably at the same time as, the sample filters. The reference filters shall be changed at least once a month, but never while any sample filters are between their tare weight (pre-sampling) and gross weight (post-sampling) measurements. The reference filters shall be the same size and material as the sample filters.

(3) *Quality control of ambient conditions*. (i) If, before the start of a weighing session, the temperature or dewpoint of the filter stabilization environment are not within specifications, then filters must remain in the environment for at least 30 minutes after conditions are corrected. If the filter stabilization environment changes during a weighing session such that the specifications are no longer met, the weighing session shall be suspended until the environment has returned to within specifications for at least 30 minutes. Once the environment has returned to within specifications for at least 30 minutes, the reference filters shall be reweighed and the criteria in paragraph (a)(3)(ii) of this section shall apply. Note that temperature and dewpoint shall be sampled once per second, and an unweighted 5-minute moving average of this data shall be calculated once per second. This moving average shall be used to determine the environment temperature and dewpoint for the purpose of determining whether or not the environment is within specifications.

(ii) If the average change in weight of the reference filters is more than 10 micrograms (after correcting for buoyancy as described in paragraph (c)(3) of this section), then all filters in the process of stabilization shall be discarded and all data collected with respect to the discarded filters shall be considered void. Note that more than 2 reference filters may be used to

achieve a more robust average of the change in weight of the reference filters.

(b) *Microbalance specifications.* The microbalance used to determine the weights of all filters shall have a precision (standard deviation) of at least ±0.25 micrograms or better for repeated weighing of a calibration weight, a precision of at least ±2.5 micrograms or better for repeated weighing of a clean filter, and a readability equal to or less than 0.1 micrograms. It is recommended that the microbalance be installed on a vibration isolation platform to isolate the microbalance's load cell from external vibration. It is also recommended that the microbalance should be shielded from convective airflow by means of an electrically grounded static dissipative draft shield. Microbalance manufacturer specifications for all preventive maintenance, periodic certification, calibration, and re-zeroing shall be followed. All certification and calibration procedures shall be NIST traceable, or traceable to an equivalent national standard.

(c) *Particulate matter filter handling and weighing.* Care should be taken to prevent contamination of the sample filters and to prevent a buildup of static charge on the filters that could interfere with filter weighing. Static neutralizers, such as Po-210 sources, shall be used to neutralize charge on a filter prior to each weighing. A static neutralizer should be replaced at the interval recommended by its manufacturer, or when it is no longer able to reduce static charge on a filter to less than ±2 VDC as measured with an electrostatic monitor at the microbalance workstation. The person weighing filters shall be grounded with respect to the microbalance to prevent imparting a static charge on the filters. This can be accomplished safely by using a grounding strap such as the wrist straps that are commonly used in the microelectronics industry, or by connecting a similar grounding strap to the tweezers. To prevent electrical shock, a 1-megohm resistor should be installed in series between the person weighing filters and ground.

(1) Within the filter stabilization environment, a pair of clean and electrically conductive tweezers shall be used to place a filter in the lower half of a filter cassette and the cassette shall be placed in a partially open glass petri dish. The petri dish lid should extend over the filter to prevent gross contamination, but it should be left slightly open on one edge to permit stabilization with the environment for at least 30 minutes.

(2) After at least 30 minutes of stabilization, each filter shall be weighed using the specified microbalance. The process of weighing a filter may be repeated and a statistical mean weight of a single filter may be calculated. Sound engineering judgment shall dictate the use of statistics to discard outliers and the weighting of averages. For a clean filter its single weight or statistical mean weight shall be considered the uncorrected tare weight of the filter.

(3) All filter weights shall be corrected for filter buoyancy in air. For the uncorrected tare weight of a filter, this calculated value is the corrected tare weight of the filter, and it must be recorded (see § 86.1344(e)(18)). Barometric pressure of the microbalance environment shall be measured with an instrument that exhibits ±0.01% full-scale accuracy and 0.01% per-year full scale stability, and the full-scale value used for such a specification shall not exceed 200 kPa.

(i) Buoyancy correction calculation. (A) Calculate vapor pressure of liquid water using the dewpoint temperature in the Magnus formula:

$$P_w = 0.6113 \times 10\wedge ((7.5 \times T_{dp})/(237.3 + T_{dp}))$$

Where:

P_w=vapor pressure of liquid water, kPa.
T_{dp}=dewpoint temperature, °C.

(B) Calculate air density using the ideal gas relationship and molecular weights of standard air and water:

$$A=(3.484\times P-1.317\times P_w)/(T+273.15)$$

Where:

A=air density, kg/m^3.
P=barometric pressure, kPa.
P_w=vapor pressure of liquid water, kPa.
T=temperature, °C.

(C) Buoyancy correction:

$$M=R\times(1-(A/\rho_w))/(1-(A/\rho_s)).$$

Where:

M=corrected mass in units of the balance display.
R=uncorrected filter weight in units of the balance display.
A=calculated air density, kg/m^3.
ρ_w=density of calibration weight used to calibrate the balance, kg/m^3.
ρ_s=density of filter material used to sample PM emissions, kg/m^3.

(ii) For determining ρ_s note that PTFE (Teflon™) and borosilicate glass both have densities in the range of 2,200 to 2,400 kg/m^3. Therefore, for PTFE-coated borosilicate glass fiber filters, an acceptable ρ_s is 2,300 kg/m^3. Note also that polymethylpentene has a density of 850 kg/m^3. Because Teflon PTFE membrane filters have an integral polymethylpentene support ring that accounts for 95% of the filter mass, an acceptable ρ_s for these filters is 920 kg/m^3. Other ρ_s values for other filters may be obtained similarly. Information about ''ρ_s should be available from the calibration weight manufacturer.

(iii) This paragraph (c)(3)(iii) shows an example of the buoyancy correction. This example assumes the following inputs: Barometric pressure (P)=101.325 kPa, temperature (T)=22.0 °C, dewpoint temperature (T_{dp})=9.5 °C, balance display (R)=100.0000 mg, calibration weight density (ρ_w)=8,000 kg/m^3, and filter material density (ρ_s)=2,300 kg/m^3. Then:

(A) The water vapor pressure (P_w) is calculated as:

$$P_w = 0.6113 \times 10\ ((7.5 \times 9.5)/(237.3 + 9.5)) = 1.186\ \text{kPa}.$$

(B) The air density (A) is calculated as:

$$A = (3.484 \times 101.325 - 1.317 \times 1.186)/(22.0 + 273.15) = 1.191\ kg/m^3.$$

(C) The corrected mass (M) is calculated as:

$$M = 100.0000 \times (1 - (1.191/8000))/(1 - (1.191/2300)) = 100.0369\ \text{mg}.$$

(4) The uncorrected weight, corrected weight, barometric pressure, temperature and humidity, of the filter shall be recorded. Afterward the filter shall be returned to the lower half of the filter cassette, and the upper half of the cassette shall be set in place. The cassette-with filter-shall then be stored in a covered glass petri dish or a sealed (*i.e.*, ends plugged) filter holder assembly, either of which shall remain in the filter stabilization environment until needed for testing. It is recommended that the filter be transported between the filter stabilization environment and the location of the emissions test within a sealed filter holder assembly.

(5) After the emissions test, the filter cassette shall be removed from the filter holder assembly. If this removal is performed in the filter stabilization environment, the upper half of the cassette shall be removed using a properly designed separator tool, the lower half of the cassette-with filter-shall be placed in a partially covered petri dish, and allowed to stabilize for at least 30 minutes. Otherwise, the cassette and filter shall be placed in a closed petri dish until it can be returned to the filter stabilization environment. Once the closed petri dish is returned to the filter stabilization environment, the petri dish shall be opened, the upper half of the cassette shall be removed using a properly designed separator tool, the lower half of the cassette-with filter-shall be placed in a partially covered petri dish, and allowed to stabilize for at least one hour.

(6) After at least 30 minutes, but no more than 60 hours of stabilization, each filter may be weighed using the specified microbalance. The process of weighing a filter may be repeated and a statistical mean may be calculated. Sound engineering judgment shall dictate the use of statistics to discard outliers and the weighting of averages. For a used filter, its single weight or statistical mean weight shall be identified as the uncorrected gross weight of the filter. The uncorrected gross weight shall be corrected for filter buoyancy using the procedure in (c)(3) of this section. The uncorrected gross filter weight, corrected gross filter weight, barometric pressure, temperature, and dewpoint shall be recorded.

(7) The net particulate matter weight (Pf) of each filter shall be equal to the corrected gross filter weight minus the corrected tare filter weight.

(8) Should the particulate matter on the filters contact the petri dish, tweezers, microbalance or any other surface, the data with respect to that filter is void.

[66 FR 5177, Jan. 18, 2001]

§ 86.1313–91 Fuel specifications.

(a) *Otto-cycle test fuel.* (1) Gasoline having the specifications listed in table N91–1 will be used by the Administrator in exhaust emission testing petroleum-fueled substantially equivalent specifications approved by the Administrator, shall be used by the manufacturer in exhaust emission testing, except that the octane specification does not apply.

TABLE N91–1

Item		ASTM	Value
Octane, research, min.		D2699	93
Sensitivity, min			7.5
Lead (organic)	g/U.S. gal. (g/liter).	D3237	[1] (0.050) [1] (0.013)
Distillation range:			
IBP	°F	D86	75–95
	(°C)		(23.9–35)
10 pct. point	°F	D86	120–135
	(°C)		(48.9–57.2)
50 pct. point	°F	D86	200–230
	(°C)		(93.3–110)
90 pct. point	°F	D86	300–325
	(°C)		(148.9–162.8)
EP	max. °F,	D86	415
	(°C)		(212.8)
Sulphur	max. wt. pct	D1266	0.10
Phosphorus, max..	g/U.S. gal. (g/liter).	D3231	0.005 (0.0013)
RVP	psi, (kPa)	D323	8.0–9.2 (60.0–63.4)
Hydrocarbon composition:			
Olefins	max. pct.	D1319	10
Aromatics	max. pct.	D1319	35
Saturates		D1319	([2])

[1] Maximum.
[2] Remainder.

(2) Unleaded gasoline representative of commercial gasoline which will be generally available through retail outlets shall be used in service accumulation.

(i) The octane rating of the gasoline used shall be not higher than one Research octane number above the minimum recommended by the manufacturer and have a minimum sensitivity of 7.5 octane numbers, where sensitivity is defined as the Research octane number minus the Motor octane number.

(ii) The Reid Vapor Pressure of the gasoline used shall be characteristic of the motor fuel used during the season in which the service accumulation takes place.

(3) Methanol fuel used for exhaust and evaporative emission testing and in service accumulation of methanol-fueled Otto-cycle engines shall be representative of commercially available methanol fuel and shall consist of at least 50 percent methanol by volume.

(i) Manufacturers shall recommend the methanol fuel to be used for testing and service accumulation in accordance with paragraph (a)(3) of this section.

(ii) The Administrator shall determine the methanol fuel to be used for testing and service accumulation.

(4) Other methanol fuels may be used for testing and service accumulation provided:

(i) They are commercially available, and

(ii) Information, acceptable to the Administrator, is provided to show that only the designated fuel would be used in customer service, and

(iii) Use of a fuel listed under paragraph (a)(3) of this section would have a detrimental effect on emissions or durability, and

(iv) Written approval from the Administrator of the fuel specifications must be provided prior to the start of testing.

(5) The specification range of the fuels to be used under paragraphs (a)(2), (a)(3), and (a)(4) of this section shall be reported in accordance with § 86.090–21(b)(3).

(b) *Diesel Test fuel.* (1) The petroleum fuels for testing diesel engines employed for testing shall be clean and bright, with pour and cloud points adequate for operability. The petroleum fuel may contain nonmetallic additives as follows: Cetane improver, metal deactivator, antioxidant, dehazer, antirust, pour depressant, dye, dispersant, and biocide. Except for the sulfur content of ''Type 2–D'' fuel, fuels specified for emissions testing are intended to be representative of commercially available in-use fuels.

(2) Petroleum fuel for diesel engines meeting the specifications in Table N91–2, or substantially equivalent specifications approved by the Administrator, shall be used in exhaust emissions testing. The grade of petroleum fuel used shall be commercially designated as ''Type 2–D'' grade diesel fuel except that fuel commercially designated as ''Type 1–D'' grade diesel fuel

may be substituted provided that the manufacturer has submitted evidence to the Administrator demonstrating to the Administrator's satisfaction that this fuel will be the predominant in-use fuel. Such evidence could include such things as copies of signed contracts from customers indicating the intent to purchase and use ''Type 1–D'' grade diesel fuel as the primary fuel for use in the engines or other evidence acceptable to the Administrator.

TABLE N91–2

Item	ASTM	Type 1–D	Type 2–D
Cetane Number	D613	48–54	42–50
Cetane Index	D86	40–54	40–48
Distillation range:			
IBP °F	D86	330–390	340–400
(°C)		(165.6–198.9)	(171.1–204.4)
10 percent point, °F	D86	370–430	400–460
(°C)		(187.8–221.1)	(204.4–237.8)
50 percent point, °F	D86	410–480	470–540
(°C)		(210–248.9)	(243.3–282.2)
90 percent point, °F	D86	460–520	560–630
(°C)		(237.8–271.1)	(293.3–332.2)
EP, °F	D86	500–560	610–690
(°C)		(260.0–293.3)	(321.1–365.6)
Gravity, °API	D287	40–44	32–37
Total Sulfur, percent	D2622	0.08–0.12	0.08–0.12
Hydrocarbon composition:			
Aromatics, pct	D1319 or D5186	[1] 8	[1] 27
Paraffins, Naphthenes, Olefins	D1319	([2])	([2])
Flashpoint, °F	D93	120	130
(°C)		(48.9)	(54.4)
(minimum)		.....	.....
Viscosity, Centistokes	D445	1.6–2.0	2.0–3.2

[1] Minimum.
[2] Remainder.

(3) Petroleum fuel for diesel engines meeting the specifications in table N91–3, or substantially equivalent specifications approved by the Administrator, shall be used in service accumulation. The grade of petroleum fuel used shall be commercially designated as ''Type 2–D'' grade diesel fuel except that fuel commercially designated as ''Type 1–D'' grade diesel fuel may be substituted provided that the manufacturer has submitted evidence to the Administrator demonstrating to the Administrator's satisfaction that this fuel will be the predominant in-use fuel. Such evidence could include such things as copies of signed contracts from customers indicating the intent to purchase and use ''Type 1–D'' grade diesel fuel as the primary fuel for use in the engines or other evidence acceptable to the Administrator.

TABLE N91–3

Item	ASTM	Type 1–D	Type 2–D
Cetane Number	D613	42–56	30–58
Distillation range:			
90 pct. point, °F	D86	440–530	540–630
(°C)	.....	(226.7–276.7)	(282.2–332.2)
Gravity, °API	D287	39–45	30–42
Total sulfur, pct.	D2622	0.08–0.12	0.08–0.12
Flashpoint, min., °F	D93	120	130
(°C)	.....	(48.9)	(54.4)
Viscosity, centistokes	D455	1.2–2.2	1.5–4.5

(4) Methanol fuel used for exhaust and evaporative emission testing and in service accumulation of methanol-fueled diesel engines shall be representative of commercially available methanol fuel and shall consist of at least 50 percent methanol by volume.

(i) Manufacturers shall recommend the methanol fuel to be used for testing and service accumulation in accordance with paragraph (b)(4) of this section.

(ii) The Administrator shall determine the methanol fuel to be used for testing and service accumulation.

(5) Other fuels may be used for testing and service accumulation provided:

(i) They are commercially available, and

(ii) Information, acceptable to the Administrator, is provided to show that only the designated fuel would be used in customer service, and

(iii) Use of a fuel listed under paragraphs (b)(2) and (b)(3) or (b)(4) of this section would have a detrimental effect on emissions or durability, and

(iv) Written approval from the Administrator of the fuel specifications must be provided prior to the start of testing.

(6) The specification range of the fuels to be used under paragraphs (b)(2), (b)(3), (b)(4), and (b)(5) of this section shall be reported in accordance with § 86.090–21(b)(3).

(c) Fuels not meeting the specifications set forth in this section may be used only with the advance approval of the Administrator.

(d) *Mixtures of petroleum and methanol fuels for flexible fuel vehicles.* (1) Mixtures of petroleum and methanol fuels used for exhaust and evaporative emission testing and service accumulation for flexible fuel vehicles shall be within the range of fuel mixtures for which the vehicle was designed.

(2) Manufacturer testing and service accumulation may be performed using only those mixtures (mixtures may be different for exhaust testing, evaporative testing, and service accumulation) expected to result in the highest emissions, provided:

(i) The fuels which constitute the mixture will be used in customer service, and

(ii) Information, acceptable to the Administrator, is provided by the manufacturer to show that the designated fuel mixtures would result in the highest emissions, and

(iii) Written approval from the Administrator of the fuel specifications must be provided prior to the start of testing.

(3) The specification range of the fuels to be used under paragraph (d)(2) of this section shall be reported in accordance with § 86.090–21(b)(3).

[55 FR 34147, Aug. 21, 1990, as amended at 58 FR 21401, Apr. 21, 1993; 62 FR 47125, Sept. 5, 1997]

§ 86.1313–94 Fuel specifications.

(a) *Gasoline fuel.* (1) Gasoline having the specifications listed in table N94–1 will be used by the Administrator in exhaust emission testing. Gasoline having these specifications or substantially equivalent specifications approved by the Administrator, shall be used by the manufacturer in exhaust emission testing, except that the octane specification does not apply.

TABLE N94–1

Item	ASTM	Value
Octane, research, min	D2699	93
Sensitivity, min	.....	7.5
Lead (organic), g/U.S. gal. (g/liter)	D3237	[1] (0.050) [1] (0.013)
Distillation range:		
IBP, °F (°C)	D86	75–95 (23.9–35)
10 pct. point, °F (°C)	D86	120–135 (48.9–57.2)
50 pct. point, °F (°C)	D86	200–230 (93.3–110)
90 pct. point, °F (°C)	D86	300–325 (148.9–162.8)
EP, max. °F (°C)	D86	415 (212.8)
Sulphur, Max., wt. pct	D1266	0.10
Phosphorus, max., g/U.S. gal. (g/liter)	D3231	0.005 (0.0013)
RVP, psi (kPa)	D323	8.0–9.2 (60.0–63.4)
Hydrocarbon composition:		
Olefins, max. pct	D1319	10
Aromatics, max. pct	D1319	35
Saturates	D1319	([2])

[1] Maximum.
[2] Remainder.

(2)(i) Unleaded gasoline representative of commercial gasoline which will be generally available through retail outlets shall be used in service accumulation.

(ii) The octane rating of the gasoline used shall not be higher than one Research octane number above the minimum recommended by the manufacturer and have a minimum sensitivity

of 7.5 octane numbers, where sensitivity is defined as the Research octane number minus the Motor octane number.

(iii) The Reid Vapor Pressure of the gasoline used shall be characteristic of the motor fuel used during the season in which the service accumulation takes place.

(3) The specification range of the gasoline to be used under paragraph (a) of this section shall be reported in accordance with § 86.094–21(b)(3).

(b) *Petroleum diesel test fuel.* (1) The petroleum fuels for testing diesel engines employed for testing shall be clean and bright, with pour and cloud points adequate for operability. The petroleum diesel fuel may contain nonmetallic additives as follows: Cetane improver, metal deactivator, antioxidant, dehazer, antirust, pour depressant, dye, dispersant and biocide. Fuels specified for emissions testing are intended to be representative of commercially available in-use fuels.

(2) Petroleum fuel for diesel engines meeting the specifications in Table N94–2, or substantially equivalent specifications approved by the Administrator, shall be used in exhaust emissions testing. The grade of petroleum fuel used shall be commercially designated as ''Type 2–D'' grade diesel fuel except that fuel commercially designated at ''Type 1–D'' grade diesel fuel may be substituted provided that the manufacturer has submitted evidence to the Administrator demonstrating to the Administrator's satisfaction that this fuel will be the predominant in-use fuel. Such evidence could include such things as copies of signed contracts from customers indicating the intent to purchase and use ''Type 1–D'' grade diesel fuel as the primary fuel for use in the engines or other evidence acceptable to the Administrator.

TABLE N94–2

Item	ASTM	Type 1–D	Type 2–D
Cetane Number	D613	40–54	40–48
Cetane Index	D976	40–54	40–48
Distillation range:			
IBP °F	D86	330–390	340–400
(°C)		(165.6–198.9)	(171.1–204.4)
10 percent point, °F	D86	370–430	400–460
(°C)	(187.8–221.1)	(204.4–237.8)	
50 percent point, °F	D86	410–480	470–540
(°C)		(210–248.9)	(243.3–282.2)
90 percent point, °F	D86	460–520	560–630
(°C)		(237.8–271.1)	(293.3–332.2)
EP, °F	D86	500–560	610–690
(°C)		(260.0–293.3)	(321.1–365.6)
Gravity, °API	D287	40–44	32–37
Total Sulfur, percent	D2622	0.03–0.05	0.03–0.05
Hydrocarbon composition:			
Aromatics, pct	D1319 or D5186	[1] 8	[1] 27
Paraffins, Naphthenes, Olefins	D1319	([2])	([2])
Flashpoint, °F	D93	120	130
(°C)		(48.9)	(54.4)
(minimum)		.....	.....
Viscosity, Centistokes	D445	1.6–2.0	2.0–3.2

[1] Minimum.
[2] Remainder.

(3) Petroleum diesel fuel for diesel engines meeting the specifications in table N94–3, or substantially equivalent specifications approved by the Administrator, shall be used in service accumulation. The grade of petroleum diesel fuel used shall be commercially designated as ''Type 2–D'' grade diesel fuel except that fuel commercially designated as ''Type 1–D'' grade diesel fuel may be substituted provided that the manufacturer has submitted evidence to the Administrator demonstrating to the Administrator's satisfaction that this fuel will be the predominant in-use fuel. Such evidence could include such things as copies of signed contracts from customers indicating the intent to purchase and use ''Type 1–D'' grade diesel fuel as the primary fuel for use

in the engines or other evidence acceptable to the Administrator.

TABLE N94–3

Item	ASTM	Type 1–D	Type 2–D
Cetane Number	D613	40–56	30–58
Cetane Index	D976	Min. 40	Min. 40
Distillation range:			
90 pct. point °F (°C)	D86	440–530 (226.7–276.7)	540–630 (282.2–332.2)
Gravity °API	D287	39–45	30–42
Total sulfur, min. pct	D2622	0.03–0.05	0.03–0.05
Flashpoint, min. °F (°C)	D93	120 (48.9)	130 54.4
Viscosity, centistokes	D445	1.2–2.2	1.5–4.5

(4) Other petroleum distillate fuels may be used for testing and service accumulation provided:

(i) They are commercially available; and

(ii) Information, acceptable to the Administrator, is provided to show that only the designated fuel would be used in customer service; and

(iii) Use of a fuel listed under paragraphs (b)(2) and (b)(3) of this section would have a detrimental effect on emissions or durability; and

(iv) Written approval from the Administrator of the fuel specifications must be provided prior to the start of testing.

(5) The specification range of the fuels to be used under paragraph (b) of this section shall be reported in accordance with § 86.094–21(b)(3).

(c) *Methanol-fuel.* (1) Methanol fuel used for exhaust and evaporative emission testing and in service accumulation of methanol-fueled engines shall be representative of commercially available methanol fuel and shall consist of at least 50 percent methanol by volume.

(i) Manufacturers shall recommend the methanol fuel to be used for testing and service accumulation.

(ii) The Administrator shall determine the methanol fuel to be used for testing and service accumulation.

(2) Other methanol fuels may be used for testing and service accumulation provided:

(i) They are commercially available; and

(ii) Information, acceptable to the Administrator, is provided to show that only the designated fuel would be used in customer service; and

(iii) Use of a fuel listed under paragraph (b)(4)(c)(1) of this section would have a detrimental effect on emissions or durability; and

(iv) Written approval from the Administrator of the fuel specifications must be provided prior to the start of testing.

(3) The specification range of the fuels to be used under paragraphs (c)(1) and (c)(2) of this section shall be reported in accordance with § 86.094–21(b)(3).

(d) *Mixtures of petroleum and methanol fuels for flexible fuel vehicles.* (1) Mixtures of petroleum and methanol fuels used for exhaust emission testing and service accumulation for flexible fuel vehicles shall consist of the methanol and petroleum fuels listed in paragraph (a) or (b) of this section, and shall be within the range of fuel mixtures for which the vehicle was designed, as reported in accordance with § 86.94–21. The Administrator may use any fuel mixture within this range for testing.

(2) The fuel mixtures used by the manufacturers shall be sufficient to demonstrate compliance over the full design range, and shall include:

(i) For emission testing:

(A) A petroleum fuel specified in paragraph (a) or paragraph (b) of this section;

(B) A methanol fuel representative of the methanol fuel expected to the found in use.

(ii) For service accumulation, an alternating combination of the fuels specified in paragraphs (a) or (b), and (c) of this section that, based on good

engineering judgement, demonstrates the durability of the emissions control system. The combination shall be selected such that the cumulative volumes of both the methanol fuel and the petroleum fuel used shall be at least 25 percent of the total fuel volume. The fuels shall be or alternated at intervals not to exceed 500 hours.

(iii) Or, other combinations for testing and/or service accumulation which demonstrate compliance with the standards over the entire design range of the vehicle, provided that written approval is obtained from the Administrator prior to the start of testing.

(3) The specification range of the fuels to be used under this paragraph (d) shall be reported in accordance with § 86.094–21.

(e) *Natural gas-fuel.* (1) Natural gas-fuel having the following specifications will be used by the Administrator for exhaust and evaporative emission testing of natural gas-fueled engines:

NATURAL GAS CERTIFICATION FUEL SPECIFICATIONS

Item		ASTM test method No.	Value
Methane	min. mole pct.	D1945	89.0
Ethane	max. mole pct.	D1945	4.5
C_3 and higher	max. mole pct.	D1945	2.3
C_6 and higher	max. mole pct.	D1945	0.2
Oxygen	max. mole pct.	D1945	0.6
Inert gases:			
Sum of CO_2 and N_2	max. mole pct.	D1945	4.0
Odorant [1]			

[1] The natural gas at ambient conditions must have a distinctive odor potent enough for its presence to be detected down to a concentration in air of not over 1/5 (one-fifth) of the lower limit of flammability.

(2) Natural gas-fuel representative of commercial natural gas-fuel and which will be generally available through retail outlets shall be used in service accumulation.

(3) Other natural gas-fuels may be used for testing and service accumulation provided:

(i) They are commercially available;

(ii) Information, acceptable to the Administrator, is provided to show that only the designated fuel would be used in customer service; and

(iii) Written approval from the Administrator of the fuel specifications must be provided prior to the start of testing.

(4) The specification range of the fuels to be used under paragraphs (e)(1) and (e)(2) of this section shall be reported in accordance with § 86.094–21(b)(3).

(f) *Liquified petroleum gas-fuel.* (1) Liquified petroleum gas-fuel used for exhaust and evaporative emission testing and in service accumulation shall be commercially available liquefied petroleum gas-fuel.

(i) Manufacturers shall recommend the liquefied petroleum gas-fuel to be used for testing and service accumulation.

(ii) The Administrator shall determine the liquefied petroleum gas-fuel to be used for testing and service accumulation.

(2) Other liquefied petroleum gas-fuels may be used for testing and service accumulation provided:

(i) They are commercially available;

(ii) Information, acceptable to the Administrator, is provided to show that only the designated fuel would be used in customer service; and

(iii) Written approval from the Administrator of the fuel specifications must be provided prior to the start of testing.

(3) The specification range of the fuels to be used under paragraphs (f)(1) and (f)(2) of this section shall be measured in accordance with ASTM D2163–91 and reported in accordance with § 86.094–21(b)(3).

(g) Fuels not meeting the specifications set forth in this section may be used only with the advance approval of the Administrator.

[59 FR 48528, Sept. 21, 1994, as amended at 60 FR 34371, June 30, 1995; 62 FR 47125, Sept. 5, 1997]

§ 86.1313–98 Fuel specifications.

Section 86.1313–98 includes text that specifies requirements that differ from § 86.1313–94. Where a paragraph in § 86.1313–94 is identical and applicable to § 86.1313–98, this may be indicated by specifying the corresponding paragraph and the statement ''[Reserved]. For guidance see § 86.1313–94''.

(a) through (b)(1) [Reserved]. For guidance see § 86.1313–94.

(b)(2) Petroleum fuel for diesel engines meeting the specifications in

Table N98–2, or substantially equivalent specifications approved by the Administrator, shall be used in exhaust emissions testing. The grade of petroleum fuel used shall be commercially designated as ''Type 2–D'' grade diesel fuel except that fuel commercially designated at ''Type 1–D'' grade diesel fuel may be substituted provided that the manufacturer has submitted evidence to the Administrator demonstrating to the Administrator's satisfaction that this fuel will be the predominant in-use fuel. Such evidence could include such things as copies of signed contracts from customers indicating the intent to purchase and use ''Type 1–D'' grade diesel fuel as the primary fuel for use in the engines or other evidence acceptable to the Administrator.

TABLE N98–2

Item		ASTM test method No.	Type 1–D	Type 2–D
Cetane Number		D 613	40–54	40–50
Cetane Index		D 976	40–54	40–50
Distillation range:				
IBP	°F	D 86	330–390	340–400
	(°C)		(165.6–198.9)	(171.1–204.4)
10 pct. point	°F	D 86	370–430	400–460
	(°C)		(187.8–221.1)	(204.4–237.8)
50 pct. point	°F	D 86	410–480	470–540
	(°C)		(210.0–248.9)	(243.3–282.2)
90 pct. point	°F	D 86	460–520	560–630
	(°C)		(237.8–271–1)	(293.3–332.2)
EP	°F	D 86	500–560	610–690
	(°C)		(260.0–293.3)	(321.1–365.6)
Gravity	°API	D 287	40–44	32–37
Total sulfur	pct.	D 2622	0.03–0.05	0.03–0.05
Hydrocarbon composition:				
Aromatics, minimum	pct.	D 5186	8	27
Paraffins, Naphthenes, Olefins		D 1319	[1]	[1]
Flashpoint, min.	°F	D 93	120	130
	(°C)		(48.9)	(54.4)
Viscosity	centistokes	D 445	1.6–2.0	2.0–3.2

[1] Remainder.

(b)(3) through (e) [Reserved]. For guidance see § 86.1313–94.

[62 FR 47126, Sept. 5, 1997, as amended at 65 FR 8278, Feb. 18, 2000]

§ 86.1313–2004 Fuel specifications.

Section 86.1313–04 includes text that specifies requirements that differ from § 86.1313–94 and § 86.1313–98. Where a paragraph in § 86.1313–94 or § 86.1313–98 is identical and applicable to § 86.1313–04, this may be indicated by specifying the corresponding paragraph and the statement ''[Reserved]. For guidance see § 86.1313–94.'' or ''[Reserved]. For guidance see § 86.1313–98.''.

(a) *Gasoline fuel.* (1) Gasoline having the following specifications will be used by the Administrator in exhaust and evaporative emission testing of petroleum-fueled Otto-cycle engines, except that the Administrator will not use gasoline having a sulfur specification higher than 0.0045 weight percent. Gasoline having the following specification or substantially equivalent specifications approved by the Administrator, must be used by the manufacturer in exhaust and evaporative testing except that octane specifications do not apply:

Item	ASTM test method No.	Value
(i) Octane, Research, Min.	D2699	93
(ii) Sensitivity, Min.		7.5
(iii) Lead (organic), maximum: g/U.S. gal. (g/liter)	D3237	0.050 (0.013)
(iv) Distillation Range:	D86	
(A) IBP [1]: °F (°C)		75–95 (23.9–35)
(B) 10 pct. point: °F (°C)		120–135 (48.9–57.2)
(C) 50 pct. point: °F (°C)		200–230 (93.3–110)

Item	ASTM test method No.	Value
(D) 90 pct. point: °F (°C)		300–325 (148.9–162.8)
(E) EP, max: °F (°C)		415 (212.8)
(v) Sulfur, weight pct.	D1266	0.0015–0.008
(vi) Phosphorous, max. g/U.S. gal (g/liter)	D3231	0.005 (0.0013)
(vii) RVP[2,3]	D3231	8.7–9.2 (60.0–63.4)
(viii) Hydrocarbon composition:	D1319	
(A) Olefins, max. pct.		10
(B) Aromatics, max, pct.		35
(C) Saturates		Remainder

[1] For testing at altitudes above 1,219 m (4000 feet), the specified range is 75–105 deg. F (23.9–40.6 deg. C).
[2] For testing which is unrelated to evaporative emission control, the specified range is 8.0–9.2 psi (55.2–63.4 kPa).
[3] For testing at altitudes above 1,219 m (4000 feet), the specified range is 7.6–8.0 psi (52–55 kPa).

(2) For engines certified for sale in the 50 United States, ''California Phase 2'' gasoline having the specifications listed in the table in this section may be used in exhaust emission testing as an option to the specifications in paragraph (a)(1) of this section. If a manufacturer elects to utilize this option, the manufacturer must conduct exhaust emission testing with gasoline having the specifications listed in the table in this paragraph (a)(2). However, the Administrator may use or require the use of test fuel meeting the specifications in paragraph (a)(1) of this section for certification confirmatory testing, selective enforcement auditing and in-use testing. All fuel property test methods for this fuel are contained in Chapter 4 of the California Regulatory Requirements Applicable to the National Low Emission Vehicle Program (October, 1996). These requirements are incorporated by reference (see §86.1). The table follows:

Fuel property	Limit
(i) Octane, (R+M)/2 (min)	91
(ii) Sensitivity (min)	7.5
(iii) Lead, g/gal (max) (No lead added)	0–0.01
(iv) Distillation Range, °F:	
(A) 10 pct. point,	130–150
(B) 50 pct. point,	200–210
(C) 90 pct. point,	290–300
(D) EP, maximum	390
(v) Residue, vol % (max)	2.0
(vi) Sulfur, ppm by wt.	15–40, except that Administrator may use and approve for use, lower ranges where such ranges are consistent with current California requirements.
(vii) Phosphorous, g/gal (max)	0.005
(viii) RVP, psi	6.7–7.0
(ix) Olefins, vol %	4.0–6.0
(x) Total Aromatic Hydrocarbons (vol %)	22–25
(xi) Benzene, vol %	0.8–1.0
(xii) Multi-Substituted Alkyl Aromatic Hydrocarbons, vol %	12–14
(xiii) MTBE, vol %	10.8–11.2
(xiv) Additives	See Chapter 4 of the California Regulatory Requirements Applicable to the National Low Emission Vehicle Program (October, 1996). These procedures are incorporated by reference (see §86.1).
(xv) Copper Corrosion	No. 1
(xvi) Gum, Washed, mg/100 ml (max)	3.0
(xvii) Oxidation Stability, minutes (min)	1000
(xviii) Specific Gravity	No limit; report to purchaser required
(xix) Heat of Combustion	No limit; report to purchaser required
(xx) Carbon, wt %	No limit; report to purchaser required
(xxi) Hydrogen, wt %	No limit; report to purchaser required

(3)(i) Unless otherwise approved by the Administrator, unleaded gasoline representative of commercial gasoline that will be generally available through retail outlets must be used in service accumulation. Unless otherwise approved by the Administrator, this gasoline must have a minimum sulfur content of 15 ppm. Unless otherwise approved by the Administrator, fuel used for evaporative emission durability demonstration must contain ethanol as required by § 86.1824–01(a)(2)(iii). Leaded gasoline must not be used in service accumulation.

(ii) Unless otherwise approved by the Administrator, the octane rating of the gasoline used must be no higher than 1.0 Retail octane number above the lowest octane rating that meets the fuel grade the manufacturer will recommend to the ultimate purchaser for the relevant production vehicles. If the manufacturer recommends a Retail octane number rather than a fuel grade, then the octane rating of the service accumulation gasoline can be no higher than 1.0 Retail octane number above the recommended Retail octane number. The service accumulation gasoline must also have a minimum sensitivity of 7.5 octane numbers, where sensitivity is defined as the Research octane number minus the Motor octane number.

(iii) The Reid Vapor Pressure of the gasoline used must be characteristic of the motor fuel used during the season in which the service accumulation takes place.

(4) The specification range of the gasoline to be used under paragraph (a) of this section must be reported in accordance with § 86.094–21(b)(3).

(b) heading and (b)(1) [Reserved]. For guidance see § 86.1313–94.

(b)(2) [Reserved]. For guidance see § 86.1313–98.

(b)(3) through (g) [Reserved]. For guidance see § 86.1313–94.

[66 FR 5178, Jan. 18, 2001]

§ 86.1313–2007 Fuel specifications.

Section 86.1313–2007 includes text that specifies requirements that differ from § 86.1313–94 and § 86.1313–2004. Where a paragraph in § 86.1313–94 or § 86.1313–2004 is identical and applicable to § 86.1313–2007, this may be indicated by specifying the corresponding paragraph and the statement ''[Reserved]. For guidance see § 86.1313–94.'' or ''[Reserved]. For guidance see § 86.1313–04.''.

(a) [Reserved]. For guidance see § 86.1313–2004.

(b) heading and (b)(1) [Reserved]. For guidance see § 86.1313–94.

(b)(2) Petroleum fuel for diesel engines meeting the specifications in Table N07–2, or substantially equivalent specifications approved by the Administrator, shall be used in exhaust emissions testing. The grade of petroleum fuel used shall be commercially designated as ''Type 2-D'' grade diesel fuel except that fuel commercially designated as ''Type 1-D'' grade diesel fuel may be substituted provided that the manufacturer has submitted evidence to the Administrator demonstrating to the Administrator's satisfaction that this fuel will be the predominant in-use fuel. Such evidence could include such things as copies of signed contracts from customers indicating the intent to purchase and use ''Type 1-D'' grade diesel fuel as the primary fuel for use in the engines or other evidence acceptable to the Administrator. (Note: Vehicles certified under § 86.007–11(f) must be tested using the test fuel specified in § 86.1313–2004, unless otherwise allowed by the Administrator.) Table N07–2 follows:

TABLE N07–2

Item		ASTM test method No.	Type 1–D	Type 2–D
(i) Cetane Number		D613	40–54	40–50
(ii) Cetane Index		D976	40–54	40–50
(iii) Distillation range:				
(A) IBP	°F	D86	330–390	340–400
	(°C)		(165.6–198.9)	(171.1–204.4)
(B) 10 pct. point	°F	D86	370–430	400–460
	(°C)		(187.8–221.1)	(204.4–237.8)
(C) 50 pct. point	°F	D86	410–480	470–540
	(°C)		(210.0–248.9)	(243.3–282.2)
(D) 90 pct. point	°F	D86	460–520	560–630
	(°C)		(237.8–271–1)	(293.3–332.2)
(E) EP	°F	D86	500–560	610–690
	(°C)		(260.0–293.3)	(321.1–365.6)
(iv) Gravity	°API	D287	40–44	32–37
(v) Total sulfur	ppm	D2622	7–15	7–15
(vi) Hydrocarbon composition:.				
(A) Aromatics, minimum (Remainder shall be paraffins, naphthenes, and olefins)	pct.	D5186	8	27
(vii) Flashpoint, min	°F	D93	120	130
	(°C)		(48.9)	(54.4)
(viii) Viscosity	centistokes	D445	1.6–2.0	2.0–3.2

(3) Petroleum Diesel fuel for diesel engines meeting the specifications in table N07–3, or substantially equivalent specifications approved by the Administrator, shall be used in service accumulation. The grade of petroleum diesel fuel used shall be commercially designated as Type 2–D'' grade diesel fuel except that fuel commercially designated as ''Type 1–D'' grade Diesel fuel may be substituted provided that the manufacturer has submitted evidence to the Administrator demonstrating to the Administrator's satisfaction that this fuel will be the predominant in-use fuel. Such evidence could include such things as copies of signed contracts from customers indicating the intent to purchase and use ''Type 1–D'' grade diesel fuel as the primary fuel for use in the engines or other evidence acceptable to the Administrator. Table N07–03 follows:

TABLE N07–3

Item		ASTM test method No.	Type 1–D	Type 2–D
(i) Cetane Number		D613	40–56	38–58
(ii) Cetane Index		D976	min. 40	min. 40
(iii) Distillation range:				
90 pct. point	°F	D86	440–530	540–630
	(°C)		(226.7–276–7)	(293.3–332.2)
(iv) Gravity	°API	D287	39–45	30–39
(v) Total sulfur	ppm	D2622	7–15	7–15
(vi) Flashpoint, min	°F	D93	130	130
	(°C)		(54.4)	(54.4)
(vii) Viscosity	centistokes	D445	1.2–2.2	1.5–4.5

(b)(4) through (g) [Reserved]. For guidance see § 86.1313–94.

[66 FR 5180, Jan. 18, 2001]

§ 86.1314–84 Analytical gases.

(a) Gases for the CO and CO_2 analyzers shall be single blends of CO and CO_2. respectively, using nitrogen as the diluent.

(b) Gases for the hydrocarbon analyzer shall be single blends of propane using air as the diluent.

(c) Gases for the NO_X analyzer shall be single blends of NO named as NO_X with a maximum NO_2 concentration of 5 percent of the nominal value using nitrogen as the diluent.

(d) Fuel for the FID shall be a blend of 40±2 percent hydrogen with the balance being helium. The mixture shall contain less than 1 ppm equivalent carbon response; 98 to 100 percent hydrogen fuel may be used with advance approval of the Administrator.

(e) The allowable zero gas (air or nitrogen) impurity concentrations shall not exceed 1 ppm equivalent carbon response, 1 ppm carbon monoxide, 0.04 percent (400 ppm) carbon dioxide and 0.1 ppm nitric oxide.

(f)(1) ''Zero-grade air'' includes artificial ''air'' consisting of a blend of nitrogen and oxygen with oxygen concentrations between 18 and 21 mole percent.

(2) Calibration gases shall be accurate to within ±1 percent of NBS gas standards, or other gas standards which have been approved by the Administrator.

(3) Span gases shall be accurate to within ±2 percent of NBS gas standards, or other gas standards which have been approved by the Administrator.

(g) The use of precision blending devices (gas dividers) to obtain the required calibration gas concentrations is acceptable, provided that the blended gases are accurate to within ±1.5 percent of NBS gas standards, or other gas standards which have been approved by the Administrator. This accuracy implies that primary gases used for blending must be ''named'' to an accuracy of at least ±1 percent, traceable to NBS or other approved gas standards.

[48 FR 52210, Nov. 16, 1983, as amended at 49 FR 48144, Dec. 10, 1984]

§ 86.1314–94 Analytical gases.

(a) Gases for the CO and CO_2 analyzers shall be single blends of CO and CO_2. respectively, using nitrogen as the diluent.

(b) Gases for the hydrocarbon analyzer shall be:

(1) Single blends of propane using air as the diluent; and

(2) Optionally, for response factor determination, single blends of methanol using air as the diluent.

(c) Gases for the methane analyzer shall be single blends of methane using air as the diluent.

(d) Gases for the NO_X analyzer shall be single blends of NO named as NO_X with a maximum NO_2 concentration of five percent of the nominal value using nitrogen as the diluent.

(e) Fuel for FIDs and HFIDs and methane analyzers shall be a blend of 40 ±2 percent hydrogen with the balance being helium. The mixture shall contain less than 1 ppm equivalent carbon response. 98 to 100 percent hydrogen fuel may be used with advance approval by the Administrator.

(f) The allowable zero gas (air or nitrogen) impurity concentrations shall not exceed 1 ppm equivalent carbon response, 1 ppm carbon monoxide, 0.04 percent (400 ppm) carbon dioxide and 0.1 ppm nitric oxide.

(g)(1) ''Zero-grade air'' includes artificial ''air'' consisting of a blend of nitrogen and oxygen with oxygen concentrations between 18 and 21 mole percent.

(2) Calibration gases (not including methanol) shall be traceable to within one percent of NIST (formerly NBS) gas standards, or other gas standards which have been approved by the Administrator.

(3) Span gases (not including methanol) shall be accurate to within two percent of true concentration, where true concentration refers to NIST (formerly NBS) gas standards, or other gas standards which have been approved by the Administrator.

(4) Methanol in air gases used for response factor determination shall:

(i) Be traceable to within ±2 percent of NIST (formerly NBS) gas standards, or other standards which have been approved by the Administrator; and

(ii) Remain within ±2 percent of the labeled concentration. Demonstration of stability shall be based on a quarterly measurement procedure with a precision of ±2 percent (two standard deviations), or other method approved by the Administrator. The measurement procedure may incorporate multiple measurements. If the true concentration of the gas changes by more than two percent, but less than ten percent, the gas may be relabeled with the new concentration.

(h) The use of precision blending devices (gas dividers) to obtain the required calibration gas concentrations is acceptable, provided that the blended gases are accurate to within ±1.5 percent of NBS gas standards, or other gas standards which have been approved by the Administrator. This accuracy implies that primary gases used for blending must be ''named'' to an accuracy of at least ±1 percent, traceable to NBS or other approved gas standards.

[59 FR 48530, Sept. 21, 1994, as amended at 60 FR 34371, June 30, 1995]

§ 86.1316–90 Calibrations; frequency and overview.

(a) Calibrations shall be performed as specified in §§ 86.1318 through 86.1326.

(b) At least monthly or after any maintenance which could alter calibration, the following calibrations and checks shall be performed:

(1) Calibrate the hydrocarbon analyzer, carbon dioxide analyzer, carbon monoxide analyzer, oxides of nitrogen analyzer, methanol analyzer and formaldehyde analyzer (certain analyzers may require more frequent calibration depending on the equipment and use). New calibration curves need not be generated each month if the existing curve meets the requirements of §§ 86.1321 through 86.1324.

(2) Calibrate the engine dynamometer flywheel torque and speed measurement transducers, and calculate the feedback signals to the cycle verification equipment.

(3) Check the oxides of nitrogen converter efficiency.

(c) At least weekly or after any maintenance which could alter calibration, the following checks shall be performed:

(1) [Reserved]

(2) Perform a CVS system verification.

(3) Check the shaft torque feedback signal at steady-state conditions by comparing:

(i) Shaft torque feedback to dynamometer beam load, or

(ii) By comparing in-line torque to armature current, or

(iii) By checking the in-line torque meter with a dead weight per § 86.1308(e).

(d) The CVS positive displacement pump or critical flow venturi shall be calibrated following initial installation, major maintenance or as necessary when indicated by the CVS system verification (described in § 86.1319).

(e) Sample conditioning columns, if used in the CO analyzer train, should be checked at a frequency consistent with observed column life or when the indicator of the column packing begins to show deterioration.

(f) *For diesel fuel testing only*. The carbon monoxide analyzer shall be calibrated at least every two months or after any maintenance which could alter calibration.

[54 FR 14591, Apr. 11, 1989, as amended at 58 FR 58426, Nov. 1, 1993; 62 FR 47126, Sept. 5, 1997]

§ 86.1316–94 Calibrations; frequency and overview.

(a) Calibrations shall be performed as specified in §§ 86.1318 through 86.1326.

(b) At least monthly or after any maintenance which could alter calibration, the following calibrations and checks shall be performed:

(1) Calibrate the hydrocarbon analyzer, carbon dioxide analyzer, carbon monoxide analyzer, and oxides of nitrogen analyzer (certain analyzers may require more frequent calibration depending on the equipment and use). New calibration curves need not be generated each month if the existing curve meets the requirements of §§ 86.1321 through 86.1324.

(2) Calibrate the engine dynamometer flywheel torque and speed measurement transducers, and calculate the

feedback signals to the cycle verification equipment.

(3) Check the oxides of nitrogen converter efficiency.

(c) At least weekly or after any maintenance which could alter calibration, the following checks shall be performed:

(1) Perform a CVS system verification.

(2) Check the shaft torque feedback signal at steady-state conditions by comparing:

(i) Shaft torque feedback to dynamometer beam load; or

(ii) By comparing in-line torque to armature current; or

(iii) By checking the in-line torque meter with a dead weight per § 86.1308(e).

(d) The CVS positive displacement pump or critical flow venturi shall be calibrated following initial installation, major maintenance or as necessary when indicated by the CVS system verification (described in § 86.1319).

(e) Sample conditioning columns, if used in the CO analyzer train, should be checked at a frequency consistent with observed column life or when the indicator of the column packing begins to show deterioration.

(f) For diesel fuel testing only. The carbon monoxide analyzer shall be calibrated at least every two months or after any maintenance which could alter calibration.

[59 FR 48530, Sept. 21, 1994, as amended at 60 FR 34371, June 30, 1995; 62 FR 47126, Sept. 5, 1997]

§ 86.1318–84 Engine dynamometer system calibrations.

(a) The engine flywheel torque and engine speed measurement transducers shall be calibrated at least once each month with the calibration equipment described in § 86.1308–84.

(b) The engine flywheel torque feedback signals to the cycle verification equipment shall be electronically checked before each test, and adjusted as necessary.

(c) Other engine dynamometer system calibrations shall be performed as dictated by good engineering practice.

(d) When calibrating the engine flywheel torque transducer, any lever arm used to convert a weight or a force through a distance into a torque shall be used in a horizontal position (±5 degrees).

(e) Calibrated resistors may not be used for engine flywheel torque transducer calibration, but may be used to span the transducer prior to engine testing.

§ 86.1319–84 CVS calibration.

(a) The CVS is calibrated using an accurate flowmeter and restrictor valve. The flowmeter calibration shall be traceable to the NBS, and will serve as the reference value (NBS ''true'' value) for the CVS calibration. (Note: In no case should an upstream screen or other restriction which can affect the flow be used ahead of the flowmeter unless calibrated throughout the flow range with such a device.) The CVS calibration procedures are designed for use of a ''metering venturi'' type flowmeter. Large radius or ASME flow nozzles are considered equivalent if traceable to NBS measurements. Other measurement systems may be used if shown to be equivalent under the test conditions in this action and traceable to NBS measurements. Measurements of the various flowmeter parameters are recorded and related to flow through the CVS. Procedures used by EPA for both PDP– and CFV-CVS's are outlined below. Other procedures yielding equivalent results may be used if approved in advance by the Administrator.

(b) After the calibration curve has been obtained, verification of the entire system may be performed by injecting a known mass of gas into the system and comparing the mass indicated by the system to the true mass injected. An indicated error does not necessarily mean that the calibration is wrong, since other factors can influence the accuracy of the system (e.g., analyzer calibration, leaks, or HC hangup). A verification procedure is found in paragraph (e) of this section.

(c) *PDP calibration.* (1) The following calibration procedure outlines the equipment, the test configuration, and the various parameters which must be measured to establish the flow rate of the CVS pump.

(i) All the parameters related to the pump are simultaneously measured

with the parameters related to a flowmeter which is connected in series with the pump.

(ii) The calculated flow rate, ft^3/min. (at a pump inlet absolute pressure and temperature), can then be plotted versus a correlation function which is the value of a specific combination of pump parameters.

(iii) The linear equation which relates the pump flow and the correlation function is then determined.

(iv) In the event that a CVS has a multiple speed drive, a calibration for each range used must be performed.

(2) This calibration procedure is based on the measurement of the absolute values of the pump and flowmeter parameters that relate the flow rate at each point. Two conditions must be maintained to assure the accuracy and integrity of the calibration curve:

(i) The temperature stability must be maintained during calibration. (Flowmeters are sensitive to inlet temperature oscillations; this can cause the data points to be scattered. Gradual changes in temperature are acceptable as long as they occur over a period of several minutes.)

(ii) All connections and ducting between the flowmeter and the CVS pump must be absolutely void of leakage.

(3) During an exhaust emission test the measurement of these same pump parameters enables the user to calculate the flow rate from the calibration equation.

(4) Connect a system as shown in Figure N84–6. Although particular types of equipment are shown, other configurations that yield equivalent results may be used if approved in advance by the Administrator. For the system indicated, the following measurements and accuracies are required:

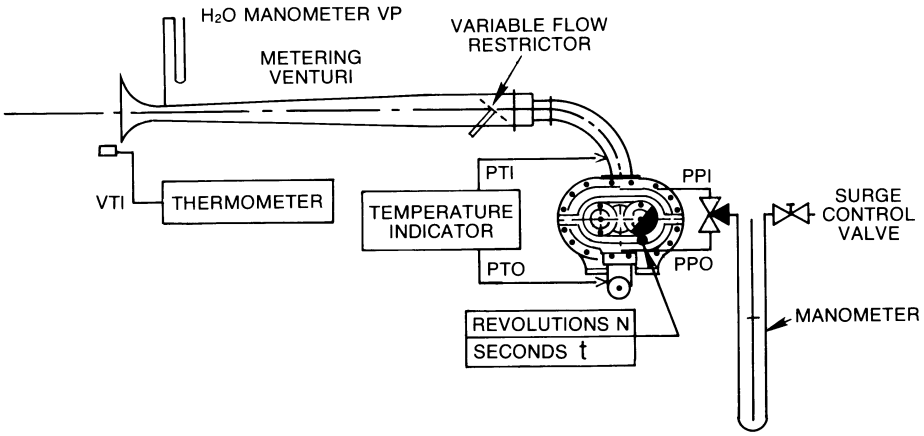

FIGURE N84-6 — PDP-CVS CALIBRATION CONFIGURATION

CALIBRATION DATA MEASUREMENTS

Parameter	Symbol	Units	Sensor-readout tolerances
Barometric pressure (corrected)	P_B	In. Hg (kPa)	±.10 in. Hg (±.340 kPa).
Ambient temperature	T_A	°F (°C)	±.5 °F (±.28 °C).
Air temperature into metering venturi	ETI	°F (°C)	±2.0 °F (±1.11 °C).
Pressure drop between the inlet and throat of metering venturi.	EDP	In. H2O (kPa)	±.05 in. H_2O (±.012 kPa).
Air flow	Q_S	Ft^3/min. (m^3/min.)	±.5% of NBS "true" value.
Air temperature at CVS pump inlet	PTI	°F (°C)	±2.0 °F (±1.11 °C).
Pressure depression at CVS pump inlet	PPI	In. Fluid (kPa)	±.13 in. Fluid (±.055 kPa).

CALIBRATION DATA MEASUREMENTS—Continued

Parameter	Symbol	Units	Sensor-readout tolerances
Specific gravity of manometer fluid (1.75 oil)	Sp. G		
Pressure head at CVS pump outlet	PPO	In. Fluid (kPa)	±.13 in. Fluid (±.055 kPa).
Air temperature at CVS pump outlet (optional)	PTO	°F (°C)	±2.0 °F (±1.11 °C).
Pump revolutions during test period	N	Revs	±1 Rev.
Elapsed time for test period	t	s	±.5 s.

(5) After the system has been connected as shown in Figure N84–6, set the variable restrictor in the wide open position and run the CVS pump for 20 minutes. Record the calibration data.

(6) Reset the restrictor valve to a more restricted condition in an increment of pump inlet depression that will yield a minimum of six data points for the total calibration. Allow the system to stabilize for 3 minutes and repeat the data acquisition.

(7) *Data analysis:* (i) The air flow rate, Q_s, at each test point is calculated in standard cubic feet per minute (68 °F, 29.92″ Hg) from the flowmeter data using the manufacturer's prescribed method.

(ii) The air flow rate is then converted to pump flow, V_o, in cubic feet per revolution at absolute pump inlet temperature and pressure:

$$V_o = \frac{Q_s}{n} \times \frac{T_p}{528} \times \frac{29.92}{P_p}$$

Where:

V_o=Pump flow, ft³/revolution (m³/revolution) at T_p, P_p

Q_s=Meter air flow rate in standard cubic feet per minute, standard conditions are 68 °F, 29.92 inches Hg (20 °C, 101.3 kPa)

n=Pump speed in revolutions per minute

T_p=Pump inlet temperature °R(°K)
=PTI + 460 (°R), or
=PTI + 273 (°K)

P_p=Absolute pump inlet pressure, inches Hg (kPa)
=P_B − PPI (Sp. Gr./13.5955) and
=P_B − PPI for SI units

Where:

P_B=barometric pressure, inches Hg (kPa)

PPI=Pump inlet depression, inches fluid (kPa)

Sp. Gr.=Specific gravity of manometer fluid

(iii) The correlation function at each test point is then calculated from the calibration data.

$$x_o = \frac{1}{n}\sqrt{\frac{\Delta P}{P_e}}$$

Where:

X_o = correlation function.

ΔP = The pressure differential from pump inlet to pump outlet, inches Hg (kPa).
= $P_e - P_p$

P_e = Absolute pump outlet pressure, inches Hg (kPa)
= P_B + PPO(Sp. Gr./13.5955) and
= P_B for SI units

Where:

PPO = Pressure head at pump outlet, inches fluid (kPa).

(iv) A linear least squares fit is performed to generate the calibration equation which has the form:

$V_o = D_o - M(X_o)$

D_o and M are the intercept and slope constants, respectively, describing the regression lines.

(8) A CVS system that has multiple speeds should be calibrated on each speed used. The calibration curves generated for the ranges will be approximately parallel and the intercept values, D_o, will increase as the pump flow range decreases.

(9) If the calibration has been performed carefully, the calculated values from the equation will be within ±0.50 percent of the measured value of V_o. Values of M will vary from one pump to another, but values of D_o for pumps of the same make, model and range should agree within ±3 percent of each other. Particulate influx over time will cause the pump slip to decrease, as reflected by lower values for M. Calibrations should be performed at pump start-up and after major maintenance to assure the stability of the pump slip rate. Analysis of mass injection data will also reflect pump slip stability.

(d) *CFV calibration*. (1) Calibration of the CFV is based upon the flow equation for a critical venturi. Gas flow is a function of inlet pressure and temperature:

$$Q_s = \frac{K_v P}{\sqrt{T}}$$

The calibration procedure described in paragraph (d)(3) of this section establishes the value of the calibration coefficient at measured values of pressure, temperature and air flow.

(2) The manufacturer's recommended procedure shall be followed for calibrating electronic portions of the CFV.

(3) Measurements necessary for flow calibration are as follows:

CALIBRATION DATA MEASUREMENTS

Parameter	Symbol	Units	Tolerances
Barometric pressure (corrected)	P_b	Inches Hg (kPa)	±.01 in Hg (±.034 kPa).
Air temperature, flowmeter	ETI	°F (°C)	±.25 °F (±.14 °C).
Pressure depression upstream of LFE	EPI	Inches H2O (kPa)	±.05 in H_2O (±.012 kPa).
Pressure drop across LFE matrix	EDP	Inches H2O (kPa)	±.005 in H_2O (±.001 kPa).
Air flow	Q_s	Ft^3/min. (m^3/min,)	±.5 pct.
CFV inlet depression	PPI	Inches fluid (kPa)	±.13 in fluid (±.055 kPa).
Temperature at venturi inlet	T_v	°F (°C)	±0.5 °F (±0.28 °C).
Specific gravity of manometer fluid (1.75 oil)	Sp. Gr		

(4) Set up equipment as shown in Figure N84–7 and eliminate leaks. (Leaks between the flow measuring devices and the critical flow venturi will seriously affect the accuracy of the calibration.)

(5) Set the variable flow restrictor to the open position, start the blower, and allow the system to stabilize. Record data from all instruments.

(6) Vary the flow restrictor and make at least eight readings across the critical flow range of the venturi.

(7) *Data analysis*. The data recorded during the calibration are to be used in the following calculations:

(i) The air flow rate, Qs, at each test point is calculated in standard cubic feet per minute from the flow meter data using the manufacturer's prescribed method.

(ii) Calculate values of the calibration coefficient for each test point:

$$K_v = \frac{Q_s \sqrt{T_v}}{P_v}$$

(iii) Plot K_v as a function of venturi inlet pressure. For choked flow, K_v will have a relatively constant value. As pressure decreases (vacuum increases), the venturi becomes unchoked and K_v decreases. (See Figure N84–8.)

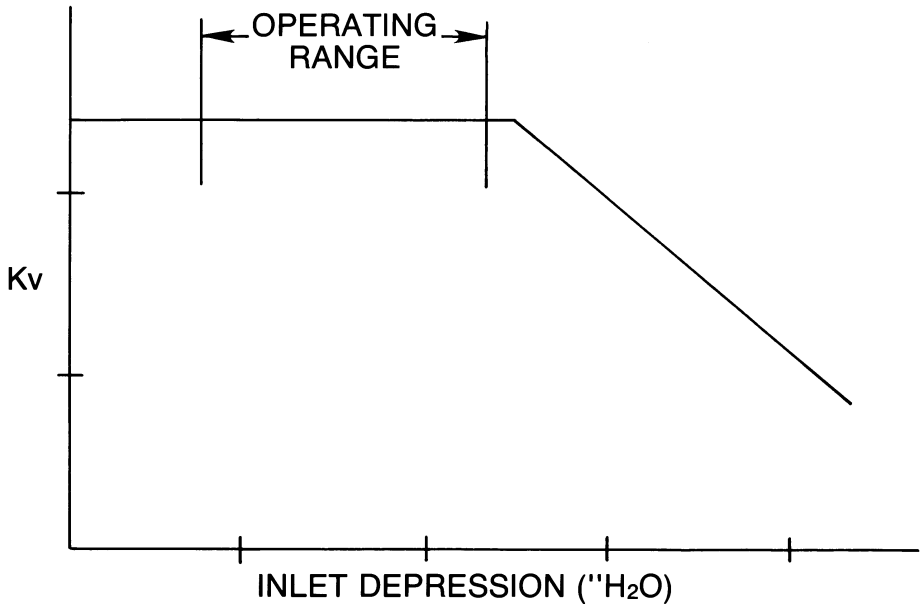

FIGURE N84-8— SONIC FLOW CHOKING

(iv) For a minimum of 8 points in the critical region calculate an average K_v and the standard deviation.

(v) If the standard deviation exceeds 0.3 percent of the average K_v, take corrective action.

(e) *CVS system verification.* The following ''gravimetric'' technique can be used to verify that the CVS and analytical instruments can accurately measure a mass of gas that has been injected into the system. (Verification can also be accomplished by constant flow metering using critical flow orifice devices.)

(1) Obtain a small cylinder that has been charged with pure propane.

(2) Determine the weight of the reference propane cylinder to an accuracy of ±0.2 percent or less of the actual amount of propane discharged into the system.

(3) Operate the CVS in the normal manner and release a quantity of pure propane into the system during the sampling period (approximately 5 minutes).

(4) The calculations of § 86.1342 are performed in the normal way except in the case of propane. The density of propane (17.30 g/ft^3/carbon atom (0.6109 kg/m^3/carbon atom)) is used in place of the density of exhaust hydrocarbons.

(5) The gravimetric mass is subtracted from the CVS measured mass and then divided by the gravimetric mass to determine the percent accuracy of the system.

(6) Good engineering practice requires that the cause for any discrepancy greater than ±2 percent must be found and corrected.

[48 FR 52210, Nov. 16, 1983, as amended at 49 FR 48144, Dec. 10, 1984; 52 FR 47871, Dec. 16, 1987; 63 FR 24449, May 4, 1998]

§ 86.1319–90 CVS calibration.

(a) The CVS is calibrated using an accurate flowmeter and restrictor valve. The flowmeter calibration shall be traceable to the NBS, and will serve as the reference value (NBS ''true'' value) for the CVS calibration. (*Note:* In no case should an upstream screen or other restriction which can affect the

flow be used ahead of the flowmeter unless calibrated throughout the flow range with such a device.) The CVS calibration procedures are designed for use of a ''metering venturi'' type flowmeter. Large radius or ASME flow nozzles are considered equivalent if traceable to NBS measurements. Other measurement systems may be used if shown to be equivalent under the test conditions in this section and traceable to NBS measurements. Measurements of the various flowmeter parameters are recorded and related to flow through the CVS. Procedures used by EPA for both PDP-CVS and CFV-CVS are outlined below. Other procedures yielding equivalent results may be used if approved in advance by the Administrator.

(b) After the calibration curve has been obtained, verification of the entire system may be performed by injecting a known mass of gas into the system and comparing the mass indicated by the system to the true mass injected. An indicated error does not necessarily mean that the calibration is wrong, since other factors can influence the accuracy of the system (*e.g.*, analyzer calibration, leaks, or HC hangup). A verification procedure is found in paragraph (e) of this section.

(c) *PDP calibration.* (1) The following calibration procedure outlines the equipment, the test configuration, and the various parameters which must be measured to establish the flow rate of the CVS pump.

(i) All the parameters related to the pump are simultaneously measured with the parameters related to a flowmeter which is connected in series with the pump.

(ii) The calculated flow rate, ft^3/min, (at pump inlet absolute pressure and temperature) can then be plotted versus a correlation function which is the value of a specific combination of pump parameters.

(iii) The linear equation which relates the pump flow and the correlation function is then determined.

(iv) In the event that a CVS has a multiple speed drive, a calibration for each range used must be performed.

(2) This calibration procedure is based on the measurement of the absolute values of the pump and flowmeter parameters that relate the flow rate at each point. Two conditions must be maintained to assure the accuracy and integrity of the calibration curve:

(i) The temperature stability must be maintained during calibration. (Flowmeters are sensitive to inlet temperature oscillations; this can cause the data points to be scattered. Gradual changes in temperature are acceptable as long as they occur over a period of several minutes.)

(ii) All connections and ducting between the flowmeter and the CVS pump must be absolutely void of leakage.

(3) During an exhaust emission test the measurement of these same pump parameters enables the user to calculate the flow rate from the calibration equation.

(4) Connect a system as shown in Figure N84–6. Although particular types of equipment are shown, other configurations that yield equivalent results may be used if approved in advance by the Administrator. For the system indicated, the following measurements and accuracies are required:

CALIBRATION DATA MEASUREMENTS

Parameter	Symbol	Units	Sensor-readout tolerances
Barometric pressure (corrected)	P_B	in. Hg (kPa)	±0.10 in. Hg (±0.340 kPa).
Ambient temperature	T_A	°F (°C)	±0.5 °F (±0.28 °C).
Air temperature into metering venturi	ETI	°F (°C)	±2.0 °F (±1.1 °C).
Pressure drop between the inlet and throat of metering venturi	EDP	in. H_20 (kPa)	±0.05 in H_2O (±0.012 kPa).
Air flow	Q_S	ft^3/min (m^3/min)	±0.5% of NBS "true" value.

CALIBRATION DATA MEASUREMENTS—Continued

Parameter	Symbol	Units	Sensor-read-out tolerances
Air temperature at CVS pump inlet	PTI	°F (°C)	±2.0 °F (±1.1 °C).
Pressure depression at CVS pump inlet	PPI	in. Fluid (kPa)	±0.13 in. Fluid (±0.055 kPa).
Specific gravity of manometer fluid (1.75 oil)	Sp.Gr.		.
Pressure head at CVS pump outlet	PPO	in. Fluid (kPa)	±0.13 in. Fluid (±0.055 kPa).
Air temperature at CVS pump outlet (optional)	PTO	°F (°C)	±2.0 °F (±1.1 °C).
Pump revolutions during test period	N	Revs	±1 Rev.
Elapsed time for test period	t	sec.	±0.5 sec.

(5) After the system has been connected as shown in Figure N84–6, set the variable restrictor in the wide open position and run the CVS pump for 20 minutes. Record the calibration data.

(6) Reset the restrictor valve to a more restricted condition in an increment of pump inlet depression that will yield a minimum of six data points for the total calibration. Allow the system to stabilize for 3 minutes and repeat the data acquisition.

(7) *Data analysis:*

(i) The air flow rate, Q_s, at each test point is calculated in standard cubic feet per minute (68°, 29.92 in. Hg.) from the flowmeter data using the manufacturer's prescribed method.

(ii) The air flow rate is then converted to pump flow, V_o, in cubic feet per revolution at absolute pump inlet temperature and pressure:

$$V_o = (Q_{s/n}) \times (T_p/528) \times (29.92/P_p)$$

Where:

(A) V_o = Pump flow, ft³/rev (m³/rev) at T_p, P_p.

(B) Q_s = Meter air flow rate in standard cubic feet per minute, standard conditions are 68 °F, 29.92 in. Hg (20 °C, 101.3 kPa).

(C) n = Pump speed in revolutions per minute.

(D) T_p = Pump inlet temperature °R(°K) = PTI + 460 (°R), or = PTI + 273 (°K).

(E) P_p = Absolute pump inlet pressure, in. Hg. (kPa)

= P_B − PPI(Sp.Gr./13.5955) and

= PB − PPI for SI units.

Where:

(F) P_B = barometric pressure, in. Hg. (kPa).

(G) PPI = Pump inlet depression, in. fluid (kPa).

(H) Sp.Gr. = Specific gravity of manometer fluid.

(iii) The correlation function at each test point is then calculated from the calibration data:

$$X_o = \frac{1}{n}\sqrt{\frac{\Delta P}{P_e}}$$

Where:

(A) X_o = correlation function.

(B) D_p = The pressure differential from pump inlet to pump outlet, in. Hg. (kPa).

= P_{e-Pp}.

(C) P_e = Absolute pump outlet pressure, in. Hg. (kPa)

= P_B + PPO (Sp.Gr./13.5955) and

= P_B + PPO *for SI units.*

Where:

(D) PPO = Pressure head at pump outlet, in. fluid (kPa).

(iv) A linear least squares fit is performed to generate the calibration equation which has the form:

$$V_o = D_o - M(X_o)$$

D_o and M are the intercept and slope constants, respectively, describing the regression line.

(8) A CVS system that has multiple speeds should be calibrated on each speed used. The calibration curves generated for the ranges will be approximately parallel and the intercept values, D_o, will increase as the pump flow range decreases.

(9) If the calibration has been performed carefully, the calculated values from the equation will be within ±0.50 percent of the measured value of V_o. Values of M will vary from one pump to another, but values of D_o for pumps of the same make, model and range should agree within ±3 percent of each other. Particulate influx over time will cause the pump slip to decrease, as reflected by lower values for M. Calibrations should be performed at pump start-up and after major maintenance to assure the stability of the pump slip rate. Analysis of mass injection data will also reflect pump slip stability.

(d) *CFV calibration.* (1) Calibration of the CFV is based upon the flow equation for a critical venturi. Gas flow is a function of inlet pressure and temperature:

$$Q_s = \frac{K_v P}{\sqrt{T}}$$

Where:

(i) Q_s = flow.

(ii) K_v = calibration coefficient.

(iii) P = absolute pressure.

(iv) T = absolute temperature.

The calibration procedure described in paragraph (d)(3) of this section establishes the value of the calibration coefficient at measured values of pressure, temperature and air flow.

(2) The manufacturer's recommended procedure shall be followed for calibrating electronic portions of the CFV.

(3) Measurements necessary for flow calibration are as follows:

CALIBRATION DATA MEASUREMENTS

Parameter	Symbol	Units	Sensor-readout tolerances
Barometric pressure (corrected)	P_b	in Hg (kPa)	±.01 in Hg (±.034 kPa).
Air temperature, into flowmeter	ETI	°F (°C)	±0.5 °F (±.28 °C).
Pressure drop between the inlet and throat of metering venturi.	EDP	Inches H_2O (kPa)	±0.05 in H_2O (±.012 kPa).
Air flow	Q_s	Ft^3/min. (m^3/min)	±.5 % of NBS "true" value.
CFV inlet depression	PPI	Inches fluid (kPa)	±.13 in fluid (±.055 kPa).
CFV outlet pressure	PPO	Inches Hg (kPa)	±.05 in Hg (±.17 kPa)[1].
Temperature at venturi inlet	T_v	°F (°C)	±4.0 °F (±2.22 °C).
Specific gravity of manometer fluid (1.75 oil)	Sp. Gr		

[1] Requirement begins August 20, 2001.

(4) Set up equipment as shown in Figure N84–7 and eliminate leaks. (Leaks between the flow measuring devices and the critical flow venturi will seriously affect the accuracy of the calibration.)

(5) Set the variable flow restrictor to the open position, start the blower, and allow the system to stabilize. Record data from all instruments.

(6) Vary the flow restrictor and make at least eight readings across the critical flow range of the venturi.

(7) *Data analysis.* The data recorded during the calibration are to be used in the following calculations:

(i) The air flow rate, Q_s, at each test point is calculated in standard cubic feet per minute from the flow meter data using the manufacturer's prescribed method.

(ii) Calculate values of the calibration coefficient for each test point:

$$K_v = \frac{Q_s \sqrt{T_v}}{P_v}$$

Where:

(A) Q_s = Flow rate in standard cubic feet per minute, at the standard conditions of 68 °F, 29.92 in Hg (20 °C, 101.3 kPa).

(B) T_v = Temperature at venturi inlet, °R(°K).

(C) P_v = Pressure at venturi inlet, in. Hg. (kPA)

= P_B − PPI (Sp.GR./13.5955), and

= P_B − PPI *for SI units.*

Where:

(D) PPI = Venturi inlet pressure depression, in. fluid (kPa).

(E) Sp.Gr. = Specific gravity of manometer fluid.

(iii) Plot K_v as a function of venturi inlet pressure. For choked flow, K_v will have a relatively constant value. As

pressure decreases (vacuum increases), the venturi becomes unchoked and K_v decreases. (See Figure N84–8.)

(iv) For a minimum of 8 points in the critical region calculate an average K_v and the standard deviation.

(v) If the standard deviation exceeds 0.3 percent of the average K_v, take corrective action.

(8) Calculation of a parameter for monitoring sonic flow in the CFV during exhaust emissions tests:

(i) *Option 1.* (A) CFV pressure ratio. Based upon the calibration data selected to meet the criteria for paragraphs (d)(7)(iv) and (v) of this section, in which K_v is constant, select the data values associated with the calibration point with the lowest absolute venturi inlet pressure. With this set of calibration data, calculated the following CFV pressure ratio limit, $Pr_{ratio\text{-}lim}$:

$$Pr_{ratio\text{-}lim} = \frac{P_{out\text{-}cal}}{P_{in\text{-}cal}}$$

Where:

$P_{in\text{-}cal}$ = Venturi inlet pressure (PPI in absolute pressure units), and

$P_{out\text{-}cal}$ = Venturi outlet pressure (PPO in absolute pressure units), measured at the exit of the venturi diffuser outlet.

(B) The venturi pressure ratio ($Pr_{ratio\text{-}i}$) during all emissions tests must be less than, or equal to, the calibration pressure ratio limit ($Pr_{ratio\text{-}lim}$) derived from the CFV calibration data, such that:

$$\frac{P_{out\text{-}i}}{P_{in\text{-}i}} = Pr_{ratio\text{-}i} \leq Pr_{ratio\text{-}lim}$$

Where:

$P_{in\text{-}i}$ and $P_{out\text{-}i}$ are the venturi inlet and outlet pressures, in absolute pressure units, at each i-th interval during the emissions test.

(ii) *Option 2.* Other methods: With prior Administrator approval, any other method may be used that assure that the venturi operates at sonic conditions during emissions tests, provided the method is based upon sound engineering principles.

(e) *SSV calibration.* (1) The calibration of the SSV located in the tunnel shall be conducted in a similar manner as the CFV or PDP calibration. Gas flow within the SSV is a function of inlet pressure, P_1, the inlet temperature, T_1, and the pressure drop between the throat and the inlet, DP. Note that the following procedure is consistent with SAE J244. The calibration procedure described in paragraph (e)(3) of this section establishes the values of the coefficients at measured values of pressure, temperature and airflow.

(i) The flow rate for a subsonic venturi is calculated as a volumetric flow rate (Q_s) or a mass flow rate (Q_m) as follows: or

$$Q_s = \frac{Q_m}{\rho_s} = \frac{K_q}{\rho_s}\left(\frac{C_d * Y * d^2}{\sqrt{1-\beta^4}}\right)\sqrt{\rho_i * \Delta P}$$

$$Q_m = K_q * C_d * Y * d^2\left(\frac{\rho_i * \Delta P}{1-\beta^4}\right)^{1/2}$$

Where:

K_q = 0.0021074 (SI units).

Q_s = Air Volume Flow, SCFM (m^3/min).

Q_m = Air Mass Flow, lbm/min (kg/min).

ρ_s = Density at Standard Conditions, lbm/ft^3 (kg/m^3) as specified in paragraph (e)(1)(v) of this section.

ρ_s = Density at inlet conditions, lbm/ft^3 (kg/m^3), as specified in paragraph (e)(1)(iii) of this section.

C_d = Coefficient of Discharge = Actual Air Flow/Theoretical Air Flow.

Y = Expansion factor, as specified in paragraph (e)(1)(ii) of this section.

d = Throat diameter, inch (mm).

β = Ratio of venturi throat diameter to approach pipe diameter.

ΔP = Pressure drop between inlet and throat, in. H_2O (kPa).

(ii) The expansion factor (Y) is calculated as follows:

$$Y = \left[r^{\frac{2}{k}} \left(\frac{k}{k-1} \right) \left(\frac{1 - r^{\left(\frac{k-1}{k}\right)}}{1-r} \right) \left(\frac{1-\beta^4}{1-\beta^4 * r^{\frac{2}{k}}} \right) \right]^{\frac{1}{2}}$$

Where:

$$r = 1 - \frac{\Delta P}{P_{abs}}$$

$$\beta = \frac{d}{D}$$

$d = \text{Throat diam., in (mm)}$

$D = \text{Inlet Pipe diam., in (mm)}$

$k = \text{Ratio of Specific Heat (1.40 for Air)}$

(iii) The inlet density (ρ1) is calculated as follows:

$$\rho_1 = \frac{P_{abs}}{R_{mix} * T_{abs}}$$

Where:

$P_{abs} = P_1 + P_B$

$T_{abs} = T_1 + 2731$

$R_{mix} = R_u / MW_{mix}$

$R_u = 8.3144$ kJ/kg-mole-K

MW_{mix} = the molecular weight of the mix, as calculated in paragraph (e)(1)(iv) of this section.

(iv) The molecular weight of the mix, is calculated as follows:

$$MW_{mix} = \frac{MW_{AIR} * (P_{abs} - P_V) + MW_{H_2O} * P_v}{P_{abs}}$$

Where:

P_V = Vapor pressure, in Hg (kPa)

MW_{AIR} = 28.964 kg/kg-mole

MW_{H_20} = 18.015 kg/kg-mole

(v) The density at standard conditions of 101.33 kPa and 20 °C is calculated as follows:

$$\rho_s = \frac{101.33}{\frac{8.3144}{28.964} * 293.15} = 1.2041 \text{ kg/m}^3$$

(2) The venturi manufacturer's recommended procedure shall be followed for calibrating electronic portions of the SSV.

(3) Measurements necessary for flow calibration of the SSV are as follows:

CALIBRATION DATA MEASUREMENT

Parameter	Sym	Units	Tolerance
(i) Barometric pressure (corrected to 32 °F)	P_B	in. Hg (kPa)	±.01in. Hg (±.034kPa)
(ii) Air temperature, into calibration venturi	ETI	°F (°C)	±.5 °F (.28 °C)
(iii) Pressure drop between the inlet and throat of calibration venturi (corrected to 68 °F)..	EDP	in. H_2O (kPA)	±.05 in. H_2O (±.012kPa)

CALIBRATION DATA MEASUREMENT—Continued

Parameter	Sym	Units	Tolerance
(iv) Air Flow	Q_S	Std ft³/min (m³/min).	±5% of NIST "true" value
(v) SSV inlet depression	P_1	in. H_2O (kPa)	±.23 in. H_2O (±.057kPa)
(vi) Pressure drop between the inlet and throat of SSV	DP	in. H_2O (kPa)	±.05 in. H_2O (±.012kPa)
(vii) Water vapor pressure of inlet air	P_V	in. Hg (kPa)	±.10 in. Hg (±.34kPa)
(vii) Temperature at SSV inlet	T_1	°F (°C)	±4.0 °F (2.2 °C)

(4) Set up equipment similar to CFV or PDP calibration except the variable flow restrictor valve can be deleted or set in the open position, and the pressure drop reading device must be added. The calibration test must be conducted with the test subsonic venturi in place in its permanent position. Any subsequent changes in upstream or downstream configuration could cause a shift in calibration. Leaks between the calibration metering device and the SSV must be eliminated.

(5) Adjust the variable flow blower or restrictor valve to its maximum in-use flow rate. Allow the system to stabilize and record data from all instruments. Be sure to avoid choke condition.

(6) Vary the flow through a minimum of eight steps covering the intended in-use operating range of the SSV.

(7) Data analyses. If the calibration venturi is used at the tunnel inlet (free standing), then assume a value of β=0. If the SSV installed in the CVS tunnel, use the actual inside tunnel diameter and the throat diameter to compute β.

(i) Assume an initial value for Cd = 0.98 to calculate Q_m for the calculation of Reynolds number, Re,:

$$Re = \frac{6.667E4 * Q_m}{\pi * d * \mu}$$

Where: μ = viscosity of air, centipoise

$$\mu = K_\mu * \frac{T_k^{1.5}}{(T_K + 110.4)}$$

Kμ=1.458E–3

T_K=(T_1 °C+273.16)

(ii) From the initial calibration of the venturi, establish an equation of Cd as a function of Re. The following functional forms should be reviewed, but a power series, least-squares fit polynomial equation may result in the best fit. Many factors involved in the installation of SSV and the operating range of the Reynolds number can affect the functional relationship of the Cd with Re. Calculate Cd based on this initial equation of Re. Compute a final Q_m based on this calculated Cd for both the calibration nozzle and the inline SSV.

(8)(i) Compute the percent difference in air flow between the calibration venturi and the inline SSV. If the difference in percent of point is greater than 1%, compute a new Cd and Re for the in-tunnel venturi as follows:

Cd_{new}=Actual Air Flow/Theoretical Air Flow=Qm_{act} /Qm_{theo}

$$Re_{new} = \frac{0.8Qm_{cal}}{\pi * d * \mu}$$

(ii) Qm_{act} is flow measured by the calibration venturi and Qm_{theo} is the theoretical calculated flow based on the in-tunnel SSV conditions with Cd set equal to 1. Re_{new} is based on the calibrated venturi flow, but the in-tunnel SSV properties. Recalculate a new curve fit of Cd_{new} for the inline venturi as a function of Re_{new} following the guidelines in paragraph (e)(7) of this section. Agreement of the fit should be within 1.0% of point. Install the new Cd curve fit in the test cell flow computing device and conduct the propane injection, flow verification test.

(f) *CVS system verification*. The following ''gravimetric'' technique can be used to verify that the CVS and analytical instruments can accurately measure a mass of gas that has been injected into the system. (Verification can also be accomplished by constant flow metering using critical flow orifice devices.)

(1) Obtain a small cylinder that has been charged with pure propane or carbon monoxide gas (CAUTION—carbon monoxide is poisonous).

(2) Determine a reference cylinder weight to the nearest 0.01 grams.

(3) Operate the CVS in the normal manner and release a quantity of pure propane into the system during the sampling period (approximately 5 minutes).

(4) Following completion of step (3) above (if methanol injection is required), continue to operate the CVS in the normal manner and release a known quantity of pure methanol (in gaseous form) into the system during the sampling period (approximately five minutes). This step does not need to be performed with each verification, provided that it is performed at least twice annually.

(5) The calculations of § 86.1342 are performed in the normal way except in the case of propane. The density of propane (17.30 g/ft^3/carbon atom (0.6109 kg/m^3/carbon atom)) is used in place of the density of exhaust hydrocarbons. In the case of methanol, the density of 37.71 g/ft^3 (1.332 kg/m^3) is used.

(6) The gravimetric mass is subtracted from the CVS measured mass and then divided by the gravimetric mass to determine the percent accuracy of the system.

(7) The cause for any discrepancy greater than ±2 percent must be found and corrected. (For 1991–1995 calendar years, discrepancies greater than ±2 percent are allowed for the methanol test, provided that they do not exceed ±6 percent.)

(8) The Administrator, upon request, may waive the requirement to comply with ±2 percent methanol recovery tolerance, and instead require compliance with a higher tolerance (not to exceed ±6 percent), provided that:

(i) The Administrator determines that compliance with these specified tolerances is not practically feasible; and

(ii) The manufacturer makes information available to the Administrator which indicates that the calibration tests and their results are consistent with good laboratory practice, and that the results are consistent with the results of calibration testing conducted by the Administrator.

[54 FR 14591, Apr. 11, 1989, as amended at 60 FR 34371, June 30, 1995; 63 FR 24449, May 4, 1998; 65 FR 8279, Feb. 18, 2000; 66 FR 5181, Jan. 18, 2001]

§ 86.1320–90 Gas meter or flow instrumentation calibration; particulate, methanol, and formaldehyde measurement.

(a) Sampling for particulate, methanol and formaldehyde emissions requires the use of gas meters or flow instrumentation to determine flow through the particulate filters, methanol impingers and formaldehyde impingers. These instruments shall receive initial and periodic calibrations as follows:

(1)(i) Install a calibration device in series with the instrument. A critical flow orifice, a bellmouth nozzle, or a laminar flow element or an NBS traceable flow calibration device is required as the standard device.

(ii) The flow system should be checked for leaks between the calibration and sampling meters, including any pumps that may be part of the system, using good engineering practice.

(2) Flow air through the calibration system at the sample flow rate used for particulate, methanol, and formaldehyde testing and at the backpressure which occurs during the sample test.

(3) When the temperature and pressure in the system have stabilized, measure the indicated gas volume over a time period of at least five minutes or until a gas volume of at least ±1 percent accuracy can be determined by the standard device. Record the stabilized air temperature and pressure upstream of the instrument and as required for the standard device.

(4) Calculate air flow at standard conditions as measured by both the standard device and the instrument(s). (Standard conditions are defined as 68 °F (20 °C) and 29.92 in Hg (101.3 kPa).)

(5) Repeat the procedures of paragraphs (a) (2) through (4) of this section using at least two flow rates which bracket the typical operating range.

(6) If the air flow at standard conditions measured by the instrument differs by ±1.0 percent of the maximum operating range or ±2.0 percent of the

point (whichever is smaller), then a correction shall be made by either of the following two methods:

(i) Mechanically adjust the instrument so that it agrees with the calibration measurement at the specified flow rates using the criteria of paragraph (a)(6) of this section, or

(ii) Develop a continuous best fit calibration curve for the instrument (as a function of the calibration device flow measurement) from the calibration points to determine corrected flow. The points on the calibration curve relative to the calibration device measurements must be within ±1.0 percent of the maximum operating range of ±2.0 percent of the point (whichever is smaller).

(7) For double dilution systems, the accuracy of the secondary dilution flow measurement device should be within ±1.0 percent of the total flow through the filter.

(b) *Other systems.* A bell prover may be used to calibrate the instrument if the procedure outlined in ANSI B109.1–1973 is used. Prior approval by the Administrator is not required to use the bell prover.

[54 FR 14593, Apr. 11, 1989]

§ 86.1321–90 Hydrocarbon analyzer calibration.

The FID hydrocarbon analyzer shall receive the following initial and periodic calibration. The HFID used with petroleum-fueled diesel engines shall be operated to a set point ±10 °F (±5.5 °C) between 365 and 385 °F (185 and 197 °C). The HFID used with methanol-fueled engines shall be operated at 235±15 °F (113±8 °C).

(a) *Initial and periodic optimization of detector response.* Prior to introduction into service and at least annually thereafter, the FID hydrocarbon analyzer shall be adjusted for optimum hydrocarbon response.

(1) Follow good engineering practices for initial instrument start-up and basic operating adjustment using the appropriate fuel (see § 86.1314) and zero-grade air.

(2) Optimize the FID's response on the most common operating range. The response is to be optimized with respect to fuel pressure or flow while meeting the analyzer response time given in § 86.1310(b)(3)(vii)(A) for continuous HC measurement. Efforts shall be made to minimize response variations to different hydrocarbon species that are expected to be in the exhaust. Good engineering judgement is to be used to trade off optimal FID response to propane-in-air against reductions in relative responses to other hydrocarbons. A good example of trading off response on propane for relative responses to other hydrocarbon species is given in Society of Automotive Engineers (SAE) Paper No. 770141, ''Optimization of Flame Ionization Detector for Determination of Hydrocarbon in Diluted Automotive Exhausts''; author Glenn D. Reschke. It is also required that the response be set to optimum condition with respect to air flow and sample flow. Heated Flame Ionization Detectors (HFIDs) must be at their specified operating temperature.

(3) One of the following procedures is to be used for FID or HFID optimization:

(i) Use the procedures outlined in Society of Automotive Engineers (SAE) paper No. 770141, ''Optimization of Flame Ionization Detector for Determination of Hydrocarbons in Diluted Automobile Exhaust''; author, Glenn D. Reschke, as an example.

(ii) The HFID optimization procedures outlined in § 86.331–79(c).

(iii) Alternative procedures may be used if approved in advance by the Administrator.

(iv) The procedures specified by the manufacturer of the FID or HFID.

(4) After the optimum fuel, air, and sample pressures or flow rates have been determined, they shall be recorded for future reference.

(b) *Initial and periodic calibration.* Prior to introduction into service and monthly thereafter, the FID or HFID hydrocarbon analyzer shall be calibrated on all normally used instrument ranges. Use the same flow rate and pressures as when analyzing samples. Calibration gases shall be introduced directly at the analyzer, unless the ''overflow'' calibration option of § 86.1310(b)(3)(i) for the HFID is taken.

(1) Adjust analyzer to optimize performance.

(2) Zero the hydrocarbon analyzer with zero-grade air.

(3) Calibrate on each used operating range with a minimum of 6, approximately equally spaced, propane-in-air calibration gases (e.g., 15, 30, 45, 60, 75, and 90 percent of that range). For each range calibrated, if the deviation from a least-squares best-fit straight line is within ±2 percent of the value at each non-zero data point and within ±0.3 percent of full scale on the zero data point, then concentration values may be calculated by using the linear calibration equation for that range. If the deviation exceeds these limits, then the best-fit non-linear equation which represents the data within these limits shall be used to determine concentration values.

(c) *FID response factor to methanol.* When the FID analyzer is to be used for the analysis of hydrocarbon samples containing methanol, the methanol response factor of the analyzer shall be established. The methanol response factor shall be determined at several concentrations in the range of concentrations in the exhaust sample.

(1) The bag sample of methanol for analysis in the FID shall be prepared using the apparatus shown in Figure N90–10. A known volume of methanol is injected, using a microliter syringe, into the heated mixing zone (250 °F (121 °C)) of the apparatus. The methanol is vaporized and swept into the sample bag with a known volume of zero-grade air measured by a dry gas meter.

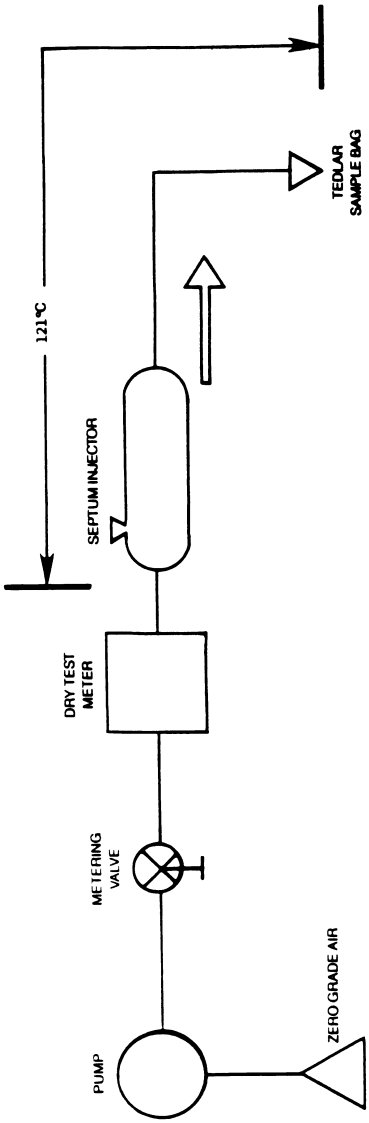

FIGURE N90-10 APPARATUS FOR PREPARATION OF FID METHANOL RESPONSE CALIBRATION MIX

(2) The bag sample is analyzed using the FID.

(3) The FID response factor, r, is calculated as follows:

r = FIDppm/SAMppm

Where:

(i) r = FID response factor.

(ii) FIDppm = FID reading in ppmC.

(iii) SAMppm = methanol concentration in the sample bag in ppmC.

$$= \frac{0.02406 \times \text{fuel injected} \times \text{fuel density}}{\text{Air volume} \times \text{mol. wt. } CH_3OH}$$

Where:

(iv) 0.02406 = volume of one mole at 29.92 in Hg and 68 °F, m^3.

(v) Fuel injected = volume of methanol injected, ml.

(vi) Fuel density = density of methanol, 0.7914 g/ml.

(vii) Air volume = volume of zero-grade air, m^3.

(viii) Mol. Wt. CH_3OH = 32.04.

[54 FR 14594, Apr. 11, 1989, as amended at 62 FR 47128, Sept. 5, 1997; 70 FR 40438, July 13, 2005]

§ 86.1321–94 Hydrocarbon analyzer calibration.

The FID hydrocarbon analyzer shall receive the following initial and periodic calibration. The HFID used with petroleum-fueled, natural gas-fueled and liquefied petroleum gas-fueled diesel engines shall be operated to a set point ±10 °F (±5.5 °C) between 365 and 385 °F (185 and 197 °C). The HFID used with methanol-fueled engines shall be operated at 235 ±15 °F (113 ±8 °C).

(a) Initial and periodic optimization of detector response. Prior to introduction into service and at least annually thereafter, the FID hydrocarbon analyzer shall be adjusted for optimum hydrocarbon response.

(1) Follow good engineering practices for initial instrument start-up and basic operating adjustment using the appropriate fuel (see § 86.1314) and zero-grade air.

(2) Optimize the FID's response on the most common operating range. The response is to be optimized with respect to fuel pressure or flow while meeting the analyzer response time given in § 86.1310(b)(3)(vii)(A) for continuous HC measurement. Efforts shall be made to minimize response variations to different hydrocarbon species that are expected to be in the exhaust. Good engineering judgement is to be used to trade off optimal FID response to propane-in-air against reductions in relative responses to other hydrocarbons. A good example of trading off response on propane for relative responses to other hydrocarbon species is given in Society of Automotive Engineers (SAE) Paper No. 770141, ''Optimization of Flame Ionization Detector for Determination of Hydrocarbon in Diluted Automotive Exhausts''; author Glenn D. Reschke. It is also required that the response be set to optimum condition with respect to air flow and sample flow. Heated Flame Ionization Detectors (HFIDs) must be at their specified operating temperature.

(3) One of the following procedures is to be used for FID or HFID optimization:

(i) Use the procedures outlined in Society of Automotive Engineers (SAE) paper number 770141, ''Optimization of Flame Ionization Detector for Determination of Hydrocarbons in Diluted Automobile Exhaust''; author, Glenn D. Reschke, as an example. Available from Society of Automotive Engineers International, 400 Commonwealth Dr., Warrendale, PA 15096–0001.

(ii) The procedure listed in § 86.331–79(c).

(iii) The procedures specified by the manufacturer of the FID or HFID.

(iv) Alternative procedures may be used if approved in advance by the Administrator.

(4) After the optimum fuel, air and sample pressures or flow rates have been determined, they shall be recorded for future reference.

(b) *Initial and periodic calibration.* Prior to introduction into service and monthly thereafter, the FID or HFID hydrocarbon analyzer shall be calibrated on all normally used instrument ranges. Use the same flow rate and pressures as when analyzing samples. Calibration gases shall be introduced directly at the analyzer, unless the ''overflow'' calibration option of § 86.1310(b)(3)(i) for the HFID is taken.

(1) Adjust analyzer to optimize performance.

(2) Zero the hydrocarbon analyzer with zero-grade air.

(3) Calibrate on each used operating range with a minimum of 6, approximately equally spaced, propane-in-air calibration gases (e.g., 15, 30, 45, 60, 75, and 90 percent of that range). For each range calibrated, if the deviation from a least-squares best-fit straight line is within ±2 percent of the value at each non-zero data point and within ±0.3 percent of full scale on the zero data point, then concentration values may be calculated by using the linear calibration equation for that range. If the deviation exceeds these limits, then the best-fit non-linear equation which

represents the data within these limits shall be used to determine concentration values.

(c) *FID response factor to methanol.* When the FID analyzer is to be used for the analysis of hydrocarbon samples containing methanol, the methanol response factor of the analyzer shall be established. The methanol response factor shall be determined at several concentrations in the range of concentrations in the exhaust sample, using either bag samples or gas bottles meeting the requirements of § 86.1314.

(1) The bag sample of methanol for analysis in the FID, if used, shall be prepared using the apparatus shown in Figure N94–10. A known volume of methanol is injected, using a microliter syringe, into the heated mixing zone (250 °F (121 °C)) of the apparatus. The methanol is vaporized and swept into the sample bag with a known volume of zero grade air measured by a gas flow meter meeting the specifications of § 86.1320.

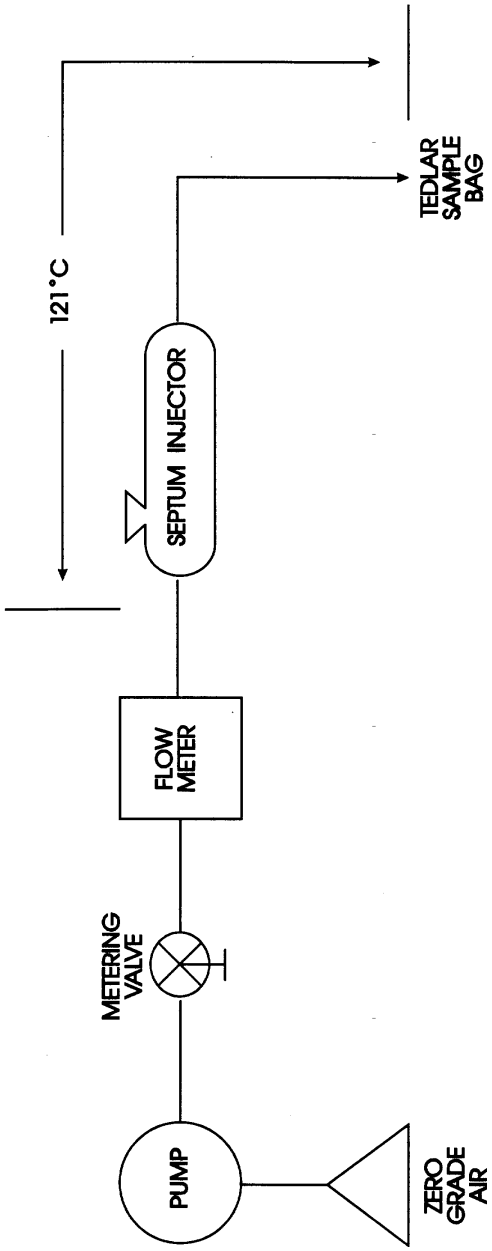

FIGURE N94-10 APPARATUS FOR PREPARATION OF FID METHANOL RESPONSE CALIBRATION MIX

(2) The bag sample is analyzed using the FID.

(3) The FID response factor, r, is calculated as follows:

r=FIDppm/SAMppm

Where:

(i) r=FID response factor.

(ii) FIDppm=FID reading in ppmC.

(iii) SAMppm=methanol concentration in the sample bag, or gas bottle, in ppmC. SAMppm for sample bags:

$$= \frac{0.02406 \times \text{Fuel injected} \times \text{Fuel density}}{\text{Air volume} \times \text{Mol. Wt. } CH_3OH}$$

Where:

(iv) 0.02406=volume of one mole at 29.92 in Hg and 68 °F, m^3.

(v) Fuel injected = volume of methanol injected, ml.

(vi) Fuel density=density of methanol, 0.7914 g/ml.

(vii) Air volume=volume of zero-grade air, m^3.

(viii) Mol. Wt. CH3OH=32.04.

(d) *FID response factor to methane.* When the FID analyzer is to be used for the analysis of natural gas-fueled vehicle hydrocarbon samples, the methane response factor of the analyzer shall be established. To determine the total hydrocarbon FID response to methane, known methane in air concentrations traceable to National Institute of Standards and Technology (NIST) shall be analyzed by the FID. Several methane concentrations shall be analyzed by the FID in the range of concentrations in the exhaust sample. The total hydrocarbon FID response to methane is calculated as follows:

r_{CH4}=FIDppm/SAMppm

Where:

(1) r_{CH4}=FID response factor to methane.

(2) FIDppm=FID reading in ppmC.

(3) SAMppm=the known methane concentration in ppmC.

[59 FR 48531, Sept. 21, 1994, as amended at 60 FR 34371, June 30, 1995; 62 FR 47128, Sept. 5, 1997; 70 FR 40438, July 13, 2005]

§ 86.1322–84 Carbon monoxide analyzer calibration.

The NDIR carbon monoxide analyzer shall receive the following initial and periodic calibration.

(a) *Initial and periodic interference check.* Prior to its introduction into service and annually thereafter, the NDIR carbon monoxide analyzer shall be checked for response to water vapor and CO_2:

(1) Follow good engineering practices for instrument start-up and operation. Adjust the analyzer to optimize performance on the most sensitive range to be used.

(2) Zero the carbon monoxide analyzer with either zero-grade air or zero-grade nitrogen.

(3) Bubble a mixture of 3 percent CO_2 in N_2 through water at room temperature and record analyzer response.

(4) An analyzer response of more than 1 percent of full scale for ranges above 300 ppm full scale or more than 3 ppm on ranges below 300 ppm full scale requires corrective action. (Use of conditioning columns is one form of corrective action which may be taken.)

(b) *Initial and periodic calibration.* Prior to its introduction into service and monthly thereafter, the NDIR carbon monoxide analyzer shall be calibrated.

(1) Adjust the analyzer to optimize performance.

(2) Zero the carbon monoxide analyzer with either zero-grade air or zero-grade nitrogen.

(3) Calibrate on each used operating range with a minimum of 6, approximately equally spaced, carbon monoxide-in-N_2 calibration gases (e.g., 15, 30, 45, 60, 75, and 90 percent of that range). For each range calibrated, if the deviation from a least-squares best-fit straight line is within ±2 percent of the value at each non-zero data point and within ±0.3 percent of full scale on the zero data point, then concentration values may be calculated by using the linear calibration equation for that range. If the deviation exceeds these limits, then the best-fit not-linear equation which represents the data within these limits shall be used to determine concentration values.

(c) The initial and periodic interference, system check, and calibration test procedures specified in 40 CFR part 86, subpart D may be used in lieu of the procedures specified in this section.

[48 FR 52210, Nov. 16, 1983, as amended at 62 FR 47128, Sept. 5, 1997]

§ 86.1323–84 Oxides of nitrogen analyzer calibration.

The chemiluminescent oxides of nitrogen analyzer shall receive the following initial and periodic calibration.

(a) Prior to introduction into service and at least monthly thereafter, the chemiluminescent oxides of nitrogen analyzer must be checked for NO2 to NO converter efficiency. Figure N84–9 is a reference for paragraphs (a) (1) through (11) of this section.

(1) Follow good engineering practices for instrument start-up and operation. Adjust the analyzer to optimize performance.

(2) Zero the oxides of nitrogen analyzer with zero-grade air or zero-grade nitrogen.

(3) Connect the outlet of the NO_X generator to the sample inlet of the oxides of nitrogen analyzer which has been set to the most common operating range.

(4) Introduce into the NO_X generator analyzer-system an NO-in-nitrogen (N_2) mixture with an NO concentration equal to approximately 80 percent of the most common operating range. The NO_2 content of the gas mixture shall be less than 5 percent of the NO concentration.

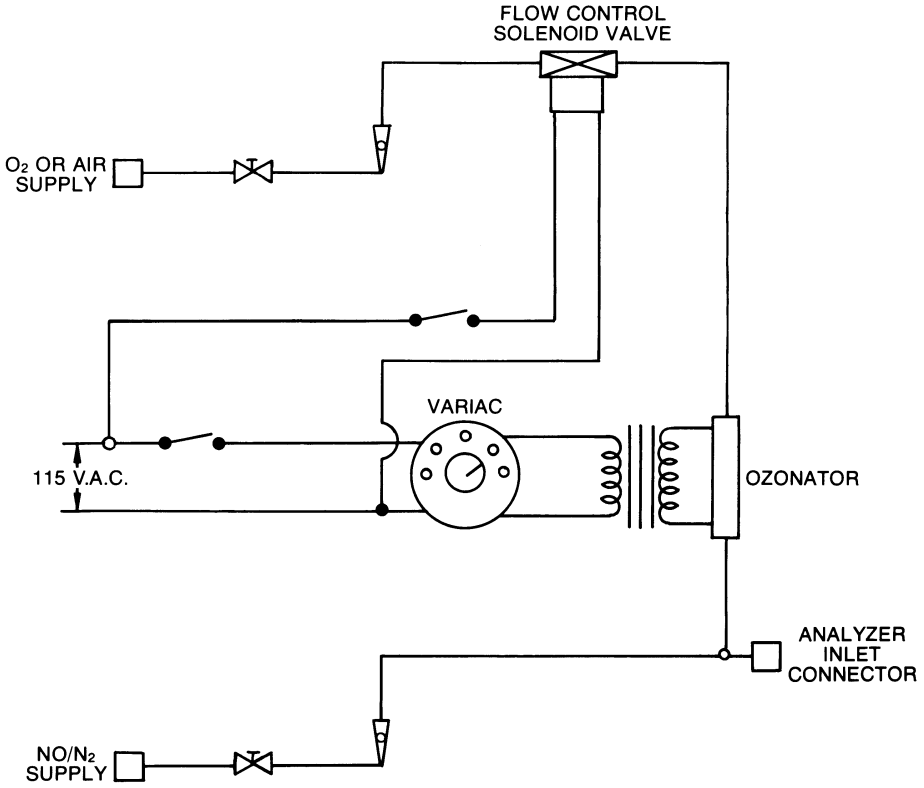

(SEE FIG. N84-5 FOR SYMBOL LEGEND)

FIGURE N84-9 — NO_x CONVERTER EFFICIENCY DETECTOR

(5) With the oxides of nitrogen analyzer in the NO mode, record the concentration of NO indicated by the analyzer.

(6) Turn on the NO_X generator O_2 (or air) supply and adjust the O_2 (or air) flow rate so that the NO indicated by the analyzer is about 10 percent less than indicated in paragraph (a)(5) of this section. Record the concentration of NO in this NO + O_2 mixture.

(7) Switch the NO_X generator to the generation mode and adjust the generation rate so that the NO measured on the analyzer is 20 percent of that measured in paragraph (a)(5) of this section. There must be at least 10 percent unreacted NO at this point. Record the concentration of residual NO.

(8) Switch the oxides of nitrogen analyzer to the NO_X mode and measure total NO_X. Record this value.

(9) Switch off the NO_X generator but maintain gas flow through the system. The oxides of nitrogen analyzer will indicate the NO_X in the NO + O_2 mixture. Record this value.

(10) Turn off the NO_X generator O_2 (or air) supply. The analyzer will now indicate the NO_X in the original NO-in-N_2 mixture. This value should be no more than 5 percent above the value indicated in paragraph (a)(4) of this section.

(11) Calculate the efficiency of the NO_X converter by substituting the concentrations obtained into the following equation:

$$\text{Percent efficiency} = \left(1 + \frac{a-b}{c-d}\right) \times 100$$

Where:

a = concentration obtained in paragraph (a)(8),

b = concentration obtained in paragraph (a)(9),

c = concentration obtained in paragraph (a)(6),

d = concentration obtained in paragraph (a)(7).

If converter efficiency is not greater than 90 percent corrective action will be required.

(b) *Initial and periodic calibration.* Prior to its introduction into service and monthly thereafter, the chemiluminescent oxides of nitrogen analyzer shall be calibrated on all normally used instrument ranges. Use the same flow rate as when analyzing samples. Proceed as follows:

(1) Adjust analyzer to optimize performance.

(2) Zero the oxides of nitrogen analyzer with zero-grade air or zero-grade nitrogen.

(3) Calibrate on each used operating range with a minimum of 6, approximately equally spaced, NO-in-N_2 calibration gases (e.g., 15, 30, 45, 60, 75, and 90 percent of that range). For each range calibrated, if the deviation from a least-squares best-fit straight line is within ±2 percent of the value at each non-zero data point and within ±0.3 percent of full scale on the zero data point, then concentration values may be calculated using the linear calibration equation for that range. If the deviation exceeds these limits, then the best-fit non-linear equation which represents the data within these limits shall be used to determine concentration values.

(c) The initial and periodic interference, system check, and calibration test procedures specified in 40 CFR part 86, subpart D, may be used in lieu of the procedures specified in this section.

(d) When testing methanol-fueled engines it may be necessary to clean the analyzer frequently to prevent interference with NO_X measurements (see EPA/60/S3–88/040).

[48 FR 52210, Nov. 16, 1983, as amended at 49 FR 48144, Dec. 10, 1984; 58 FR 58426, Nov. 1, 1993; 60 FR 34374, June 30, 1995; 62 FR 47129, Sept. 5, 1997]

§ 86.1323–2007 Oxides of nitrogen analyzer calibration.

This section describes the initial and periodic calibration of the chemiluminescent oxides of nitrogen analyzer.

(a) Prior to introduction into service and at least monthly thereafter, the chemiluminescent oxides of nitrogen analyzer must be checked for NO2 to NO converter efficiency. The Administrator may approve less frequent checks of the converter efficiency. Figure N84–9 is a reference for paragraphs (a) (1) through (11) of this section.

(1) Follow good engineering practices for instrument start-up and operation. Adjust the analyzer to optimize performance.

(2) Zero the oxides of nitrogen analyzer with zero-grade nitrogen.

(3) Connect the outlet of the NO_X generator to the sample inlet of the oxides of nitrogen analyzer, which has been set to the most common operating range.

(4) Introduce into the NO_X generator-analyzer system an NO-in-nitrogen (N2) mixture with an NO concentration equal to approximately 80 percent of the most common operating range. The NO2 content of the gas mixture shall be less than 5 percent of the NO concentration.

(5) With the oxides of nitrogen analyzer in the NO mode, record the concentration of NO indicated by the analyzer.

(6) Turn on the NO_X generator O2 supply and adjust the O2 flow rate so that the NO indicated by the analyzer is about 10 percent less than indicated in paragraph (a)(5) of this section. Record the concentration of NO in this NO + O2 mixture.

(7) Switch the NO_X generator to the generation mode and adjust the generation rate so that the NO measured by the analyzer is 20 percent of that measured in paragraph (a)(5) of this section. There must be at least 10 percent unreacted NO at this point. Record the concentration of residual NO.

(8) Switch the oxides of nitrogen analyzer to the NO_X mode and measure total NO_X. Record this value.

(9) Switch off the NO_X generator but maintain gas flow through the system. The oxides of nitrogen analyzer will indicate the NO_X in the NO + O2 mixture. Record this value.

(10) Turn off the NO_X generator O2 supply. The analyzer will now indicate the NO_X in the original NO-in-N2 mixture. This value should be no more than 5 percent above the value indicated in paragraph (a)(4) of this section.

(11) Calculate the efficiency of the NO_X converter by substituting the concentrations obtained into the following equation:

$$\text{Percent} - \text{efficiency} = \left(1 + \frac{a - b}{c - d}\right) \times 100$$

Where:

a = concentration obtained in paragraph (a)(8) of this section,

b = concentration obtained in paragraph (a)(9) of this section,

c = concentration obtained in paragraph (a)(6) of this section,

d = concentration obtained in paragraph (a)(7) of this section.

(12) If converter efficiency is not greater than 90 percent, repair the analyzer. The repaired analyzer must achieve a converter efficiency greater than 90 percent before the analyzer may be used.

(b) *Accuracy*. The accuracy at the minimum limit of the NO_X analyzer is defined in §86.1338–2007. In general the analyzer's minimum limit shall be the lowest concentration within a given range, in which it has an accuracy of ±2 percent of point.

(c) *Initial and periodic calibration*. Prior to its introduction into service and monthly thereafter, the chemiluminescent oxides of nitrogen analyzer shall be calibrated on all normally used instrument ranges. Use the same flow rate as when analyzing samples. Proceed as follows:

(1) Adjust analyzer to optimize performance.

(2) Zero the oxides of nitrogen analyzer with zero-grade nitrogen (N2).

(3) (i) Calibrate all operating ranges with a minimum of 9 NO-in-N2 calibration gases (*e.g.*, 10, 20, 30, 40, 50, 60, 70, 80, and 90 percent of that range) and one zero-grade N2 gas. Sound engineering judgment shall dictate appropriate spacing and weighting of the calibration points.

(ii) For each range calibrated, if all deviations from a least-squares best-fit straight line are within ±2 percent of the value at each non-zero data point and within ±0.3 percent of full scale on the zero data point, then concentration values may be calculated using the linear calibration equation for that range. If the specified deviations are exceeded for ranges that have a minimum limit of 1 ppm or greater, then the best-fit non-linear equation that represents the data within these deviations may be used to determine concentration values. For ranges that have a minimum limit less than 1 ppm, only a linear or second order non-linear equation that represents the data within these deviations, may be used to determine concentration values.

(d) *Chemiluminescent NO_X analyzer interference check (i.e., quench check).*

Prior to its introduction into service and at least once per year thereafter, the quench check described in this section shall be performed on CLD NO_X analyzers. CO2 and water vapor interfere with the response of a CLD by collisional quenching. The combined quench effect at their highest expected concentrations shall not exceed 2 percent.

(1) *CO_2 quench check procedure:* (i) For the procedure described in this paragraph, variations are acceptable provided that they produce equivalent $\%CO2_{quench}$ results. Connect a pressure-regulated CO_2 span gas to one of the inlets of a three-way valve. Its CO2 concentration should be approximately twice the maximum CO_2 concentration expected during testing. The valve must be leak-free, and its wetted parts must be made of a stainless steel or other inert material. Connect a pressure-regulated zero-grade N_2 gas to the other inlet of the three-way valve. Connect the single outlet of the valve to the balance-gas port of a properly operating gas divider. Connect a pressure-regulated NO span gas, which has approximately twice the typical NO concentration expected during testing, to the span-port of the gas divider. Configure the gas divider such that nearly equal amounts of the span gas and balance gas are blended with each other. Viscosity corrections shall be applied appropriately to ensure correct mass flow determinations.

(ii) With the CO_2 flowing to the balance port and the NO flowing to the span port, measure a stable CO_2 concentration from the gas divider's outlet with a properly calibrated NDIR analyzer. Record this concentration in percent (%); this is ''$\%CO_2$''. This value will be used in the water vapor quench check calculations that are detailed in the following section. After the $\%CO_2$ measurement, measure the NO concentration at the gas divider outlet with the CLD analyzer in the NO mode. Record this concentration in ppm; this is ''NO_{CO2}''. Then switch the three-way valve such that 100 percent N_2 flows to the balance port inlet. Monitor the CO_2 concentration of the gas divider's outlet until its concentration stabilizes at zero. Then measure the stable NO concentration from the gas divider's outlet. Record this value in ppm; this is ''NO_{N2}''. Calculate $\%CO_{2quench}$ as follows:

$$\%CO_{2quench} = (1.00 - (NO_{CO2}/NO_{N2})) \times 100$$

(2) Water vapor quench check procedure:

(i) For all dry CLD analyzers it must be demonstrated that for the highest expected water vapor concentration (*i.e.*, ''$\%H_2O_{exp}$'' as calculated later in this section), the water removal technique maintains CLD humidity at less than or equal to 5 $g_{water}/kg_{dry\ air}$ (or about 0.008 percent H_2O), which is 100% RH at 3.9 °C and 101.3 kPa. This humidity specification is also equivalent to about 25% RH at 25 °C and 101.3 kPa. This may be demonstrated by measuring the temperature at the outlet of a thermal dehumidifier, or by measuring humidity at a point just upstream of the CLD. Humidity of the CLD exhaust might also be measured as long as the only flow into the CLD is the flow out of the dehumidifier.

(ii) For all ''wet'' CLD analyzers the following water vapor quench check procedure shall be followed. Measure an NO span gas, which has 90% to 100% of the typical NO expected during testing, using the CLD in the NO mode. Record this concentration in ppm; this is ''NO_{dry}''. Then bubble the same NO span gas through distilled water in a sealed vessel at 25 °C ±10 °C. This temperature specification imposed to ensure that the H_2O_{vol} calculation (refer to (iii) of this section) returns an accurate result. To prevent subsequent condensation, this temperature must also be less than any temperature that the wetted sample will experience between the sealed vessel's outlet and the CLD. Record the vessel's water temperature in °C; this is ''T_{sat}''. Record the vessel's absolute pressure in kPa; this is ''P_{sat}''. Measure the wetted span gas with the CLD, and record this value in ppm; this is ''NO_{wet}''.

(iii) Calculations for water quench must consider dilution of the NO span gas with water vapor and scaling of the water vapor concentration to that expected during testing.

(A) Calculate the volume fraction of water vapor in the wetted span gas, as $H_2O_{vol} = (\exp(3.69 - (81.28/T_{sat})) + 1.61)/P_{sat}$. This calculation approximates some of the thermodynamic properties of water

based on the ''1995 Formulation for the Thermodynamic Properties of Ordinary Water Substance for General and Scientific Use'', issued by The International Association for the Properties of Water and Steam (IAPWS). However, this approximation should only be used as prescribed in this section because it is an exponential fit that is accurate for data at 25 °C ±10 °C. Then, assuming a diesel fuel atomic hydrogen to carbon ratio of 1.8, and an intake and dilution air humidity of 75 grains (10.71 $g_{water}/kg_{dry\ air}$ or 54.13 percent RH at 25 °C and 101.3 kPa),

(B) Calculate the maximum percent water vapor expected during testing; as $\%H_2O_{exp} = (0.90 \times \%CO_2) + 1.69$. $\%CO_2$ is the value measured during the $\%CO_2$ quench check.

(C) Calculate the expected wet concentration of NO in ppm; as $NO_{exp} = NO_{dry} \times (1.00 - H_2O_{vol})$

(iv) Calculate the percent water vapor quench as:

$$\%H_2O_{quench} = ((NO_{exp} - NO_{wet})/NO_{exp}) \times (\%H_2O_{exp}/H_2O_{vol})$$

(3) Add the $\%CO_{2quench}$ and the $\%H_2O_{quench}$ values. Their sum may not exceed the limit set in paragraph (d). If their sum is greater than this limit, then the CLD instrument may not be used to perform testing unless it is repaired. The analyzer must be shown to pass this quench check after the repair before it may be used for testing.

[66 FR 5182, Jan. 18, 2001]

§ 86.1324–84 Carbon dioxide analyzer calibration.

Prior to its introduction into service and monthly thereafter, the NDIR carbon dioxide analyzer shall be calibrated as follows:

(a) Follow good engineering practices for instrument start-up and operation. Adjust the analyzer to optimize performance.

(b) Zero the carbon dioxide analyzer with either zero-grade air or zero-grade nitrogen.

(c) Calibrate on each used operating range with a minimum of 6, approximately equally spaced, carbon dioxide-in-N_2 calibration or span gases (e.g., 15, 30, 45, 60, 75, and 90 percent of that range). For each range calibrated, if the deviation from a least-squares best-fit straight line is within ±2 percent or less of the value at each non-zero data point and within ±0.3 percent of full scale on the zero data point, then concentration values may be calculated by using the linear calibration equation for that range. If the deviation exceeds these limits, then the best-fit non-linear equation which represents the data within these limits shall be used to determine concentration values.

(d) The initial and periodic interference, system check, and calibration test procedures specified in 40 CFR part 86, subpart D, may be used in lieu of the procedures in this section.

[48 FR 52210, Nov. 16, 1983, as amended at 62 FR 47129, Sept. 5, 1997]

§ 86.1325–94 Methane analyzer calibration.

Prior to introduction into service and monthly thereafter, the methane analyzer shall be calibrated:

(a) Follow the manufacturer's instructions for instrument startup and operation. Adjust the analyzer to optimize performance.

(b) Zero the methane analyzer with zero-grade air.

(c) Calibrate on each used operating range with a minimum of 6, approximately equally spaced, CH4 in air calibration gases (e.g., 15, 40, 45, 60, 75, and 90 percent of that range). For each range calibrated, if the deviation from a least-squares best-fit straight line is within ±2 percent of the value at each non-zero data point and within ±0.3 percent of full scale on the zero data point, then concentration values may be calculated by using the linear calibration equation for that range. If the deviation exceeds these limits, then the best-fit non-linear equation which represents the data within these limits shall be used to determine concentration values.

[59 FR 48531, Sept. 21, 1994, as amended at 62 FR 47129, Sept. 5, 1997]

§ 86.1326–90 Calibration of other equipment.

Other test equipment used for testing shall be calibrated as often as required by the manufacturer or as necessary according to good practice. Specific equipment requiring calibration is the

gas chromatograph and flame ionization detector used in measuring methanol and the high pressure liquid chromatograph (HPLC) and ultraviolet detector for measuring formaldehyde.

[54 FR 14596, Apr. 11, 1989]

§ 86.1327–90 Engine dynamometer test procedures; overview.

(a) The engine dynamometer test procedure is designed to determine the brake specific emissions of hydrocarbons, nonmethane hydrocarbons carbon monoxide, oxides of nitrogen, particulate, methanol and formaldehyde, as applicable. The test procedure consists of a ''cold'' start test following either natural or forced cool-down periods described in §§ 86.1334 and 86.1335, respectively. A ''hot'' start test follows the ''cold'' start test after a hot soak of 20 minutes. The idle test of subpart P of this part may be run after the ''hot'' start test. The exhaust emissions are diluted with ambient air and a continuous proportional sample is collected for analysis during both the cold- and hot-start tests. The composite samples collected are analyzed either in bags or continuously for hydrocarbons (HC), methane (CH_4—as applicable), carbon monoxide (CO), carbon dioxide (CO_2), and oxides of nitrogen (NO_X), or in sample collection impingers for methanol (CH_3OH) and sample collection impingers (or cartridges) for formaldehyde (HCHO). Measurement of CH_3OH and HCHO may be omitted for 1990 through 1994 model year methanol-fueled engines when a FID calibrated on methanol is used. A bag or continuous sample of the dilution air is similarly analyzed for background levels of hydrocarbon, carbon monoxide, carbon dioxide, and oxides of nitrogen and, if appropriate, methane and/or methanol and/or formaldehyde. In addition, for diesel-cycle engines, particulates are collected on fluorocarbon-coated glass fiber filters or fluorocarbon-based (membrane) filters, and the dilution air may be prefiltered.

(b) Engine torque and rpm command set points shall be issued at 5 (10 Hz recommended) Hz or greater during both the cold and hot start tests. Feedback engine torque and rpm shall be recorded at least once every second during the test.

(c) Using the torque and rpm feedback signals the brake horsepower is integrated with respect to time for the cold and hot cycles. This produces a brake horsepower-hour value that enables the brake-specific emissions to be determined (*see* § 86.1342, Calculations; gaseous exhaust emissions., and § 86.1343, Calculations; particulate exhaust emissions.).

(d)(1) When an engine is tested for exhaust emissions or is operated for service accumulation on an engine dynamometer, the complete engine shall be tested, with all emission control devices installed and functioning.

(2) Evaporative emission controls need not be connected if data are provided to show that normal operating conditions are maintained in the engine induction system.

(3) On air-cooled engines, the fan shall be installed.

(4) Additional accessories (*e.g.*, oil cooler, alternators, air compressors, etc.) may be installed or their loading simulated if typical of the in-use application.

(5) The engine may be equipped with a production type starter.

(e) Means of engine cooling which will maintain the engine operating temperatures (*e.g.*, temperatures of intake air, oil, water, etc.) at approximately the same temperature as specified by the manufacturer shall be used. Auxiliary fan(s) may be used to maintain engine cooling during operation on the dynamometer. Rust inhibitors and lubrication additives may be used, up to the levels recommended by the additive manufacturer. Antifreeze mixtures and other coolants typical of those approved for use by the manufacturer may be used.

(f) *Exhaust system.* The exhaust system shall meet the following requirements:

(1) *Gasoline-fueled and methanol-fueled Otto-cycle engines.* A chassis-type exhaust system shall be used. For all catalyst systems, the distance from the exhaust manifold flange(s) to the catalyst shall be the same as in the vehicle configuration unless the manufacturer provides data showing equivalent performance at another location. The catalyst container may be removed during all test sequences prior to the practice

cycle, and replaced with an equivalent container having an inactive catalyst support.

(2) *Petroleum-fueled and methanol-fueled diesel engines.* Either a chassis-type or a facility-type exhaust system or both systems simultaneously may be used. If the engine is equipped with an exhaust aftertreatment device, the exhaust pipe must be the same diameter as found in-use for at least 4 pipe diameters upstream to the inlet of the beginning of the expansion section containing the aftertreatment device. The exhaust backpressure or restriction shall follow the same criteria as in § 86.1330–90(f) and may be set with a valve (muffler omitted). The catalyst container may be removed during all test sequences prior to the practice cycle, and replaced with an equivalent container having an inactive catalyst support.

(i) The engine exhaust system shall meet the following requirements:

(A) The total length of the tubing from the exit of the engine exhaust manifold, turbocharger outlet or aftertreatment device to the primary dilution tunnel shall not exceed 32 feet (9.8 m).

(B) The initial portion of the exhaust system may consist of a typical in-use (i.e., length, diameter, material, etc.) chassis-type exhaust system.

(C) The distance from the exhaust manifold flange(s) or turbocharger outlet to any exhaust aftertreatment device shall be the same as in the vehicle configuration or within the distance specifications provided by the manufacturer.

(D) For engines which are not equipped with exhaust aftertreatment devices, all tubing in excess of 12 feet (3.7 m) from the exit of the turbocharger or exhaust manifold shall be insulated. For engines equipped with exhaust aftertreatment devices, all tubing after the aftertreatment device which is in excess of 12 feet (3.7 m) shall be insulated.

(E) If the tubing is required to be insulated, the radial thickness of the insulation must be at least 1.0 inch (25 mm). The thermal conductivity of the insulating material must have a value no greater than 0.75 BTU-in/hr/ft^2/ °F (0.065 W/m-K) measured at 700 °F (371 °C).

(F) A smoke meter or other instrumentation may be inserted into the exhaust system tubing. If this option is exercised in the insulated portion of the tubing, then a minimal amount of tubing not to exceed 18 inches may be left uninsulated. However, no more than 12 feet (3.66 m) of tubing can be left uninsulated in total, including the length at the smoke meter.

(ii) The facility-type exhaust system shall meet the following requirements:

(A) It must be composed of smooth tubing made of typical in-use steel or stainless steel. This tubing shall have a maximum inside diameter of 6.0 in (15 cm).

(B) Short sections (altogether not to exceed 20 percent of the entire tube length) of flexible tubing at connection points are allowed.

[54 FR 14596, Apr. 11, 1989, as amended at 60 FR 34374, June 30, 1995; 62 FR 47129, Sept. 5, 1997]

§ 86.1327–94 Engine dynamometer test procedures; overview.

(a) The engine dynamometer test procedure is designed to determine the brake specific emissions of hydrocarbons, nonmethane hydrocarbons (for natural gas-fueled engines only), carbon monoxide, oxides of nitrogen, particulate (petroleum-fueled, natural gas-fueled, liquefied petroleum gas-fueled and methanol-fueled diesel engines), and methanol and formaldehyde (for methanol-fueled diesel engines). The test procedure consists of a ''cold'' start test following either natural or forced cool-down periods described in §§ 86.1334 and 86.1335, respectively. A ''hot'' start test follows the ''cold'' start test after a hot soak of 20 minutes. The idle test of subpart P may be run after the ''hot'' start test. The exhaust emissions are diluted with ambient air and a continuous proportional sample is collected for analysis during both the cold- and hot-start tests. The composite samples collected are analyzed either in bags or continuously for hydrocarbons (HC), methane (CH_4—for natural gas-fueled engines only), carbon monoxide (CO), carbon dioxide (CO_2), and oxides of nitrogen (NO_X), or in sample collection impingers for

methanol (CH_3OH) and sample collection impingers (or capsules) for formaldehyde (HCHO). Measurement of CH_3OH and HCHO may be omitted for 1990 through 1994 model year methanol-fueled engines when a FID calibrated on methanol is used. A bag or continuous sample of the dilution air is similarly analyzed for background levels of hydrocarbon, methane, carbon monoxide, carbon dioxide and oxides of nitrogen and, if appropriate, methanol and formaldehyde. In addition, for petroleum-fueled, natural gas-fueled, liquefied petroleum gas-fueled and methanol-fueled diesel engines, particulates are collected on fluorocarbon-coated glass fiber filters or fluorocarbon-based (membrane) filters, and the dilution air may be prefiltered.

(b) Engine torque and rpm command set points shall be issued at 5 (10 Hz recommended) Hz or greater during both the cold and hot start tests. Feedback engine torque and rpm shall be recorded at least once every second during the test.

(c) Using the torque and rpm feedback signals the brake horsepower is integrated with respect to time for the cold and hot cycles. This produces a brake horsepower-hour value that enables the brake-specific emissions to be determined (see § 86.1342, Calculations, gaseous exhaust emissions; and § 86.1343, Calculations, particulate exhaust emissions).

(d)(1) When an engine is tested for exhaust emissions or is operated for service accumulation on an engine dynamometer, the complete engine shall be tested, with all emission control devices installed and functioning.

(2) Evaporative emission controls need not be connected if data are provided to show that normal operating conditions are maintained in the engine induction system.

(3) On air-cooled engines, the fan shall be installed.

(4) Additional accessories (*e.g.*, oil cooler, alternators, air compressors, etc.) may be installed or their loading simulated if typical of the in-use application.

(5) The engine may be equipped with a production type starter.

(e) Means of engine cooling which will maintain the engine operating temperatures (*e.g.*, temperatures of intake air, oil, water, etc.) at approximately the same temperature as specified by the manufacturer shall be used. Auxiliary fan(s) may be used to maintain engine cooling during operation on the dynamometer. Rust inhibitors and lubrication additives may be used, up to the levels recommended by the additive manufacturer. Antifreeze mixtures and other coolants typical of those approved for use by the manufacturer may be used.

(f) *Exhaust system.* The exhaust system shall meet the following requirements:

(1) *Otto-cycle engines.* A chassis-type exhaust system shall be used. For all catalyst systems, the distance from the exhaust manifold flange(s) to the catalyst shall be the same as in the vehicle configuration unless the manufacturer provides data showing equivalent performance at another location. The catalyst container may be removed during all test sequences prior to the practice cycle, and replaced with an equivalent container having an inactive catalyst support.

(2) *Diesel engines.* Either a chassis-type or a facility-type exhaust system or both systems simultaneously may be used. If the engine is equipped with an exhaust aftertreatment device, the exhaust pipe must be the same diameter as found in-use for at least 4 pipe diameters upstream to the inlet of the beginning of the expansion section containing the aftertreatment device. The exhaust backpressure or restriction shall follow the same criteria as in § 86.1330–90 (f) and may be set with a valve (muffler omitted). The catalyst container may be removed during all test sequences prior to the practice cycle, and replaced with an equivalent container having an inactive catalyst support.

(i) The engine exhaust system shall meet the following requirements:

(A) The total length of the tubing from the exit of the engine exhaust manifold, turbocharger outlet or aftertreatment device to the primary dilution tunnel shall not exceed 32 feet (9.8 m).

(B) The initial portion of the exhaust system may consist of a typical in-use

(i.e., length, diameter, material, etc.) chassis-type exhaust system.

(C) The distance from the exhaust manifold flange(s) or turbocharger outlet to any exhaust aftertreatment device shall be the same as in the vehicle configuration or within the distance specifications provided by the manufacturer.

(D) For engines which are not equipped with exhaust aftertreatment devices, all tubing in excess of 12 feet (3.7 m) from the exit of the turbocharger or exhaust manifold shall be insulated. For engines equipped with exhaust aftertreatment devices, all tubing after the aftertreatment device which is in excess of 12 feet (3.7 m) shall be insulated.

(E) If the tubing is required to be insulated, the radial thickness of the insulation must be at least 1.0 inch (25 mm). The thermal conductivity of the insulating material must have a value no greater than 0.75 BTU-in/hr/ft^2/ °F (0.065 W/m-K) measured at 700 °F (371 °C).

(F) A smoke meter or other instrumentation may be inserted into the exhaust system tubing. If this option is exercised in the insulated portion of the tubing, then a minimal amount of tubing not to exceed 18 inches may be left uninsulated. However, no more than 12 feet (3.66 m) of tubing can be left uninsulated in total, including the length at the smoke meter.

(ii) The facility-type exhaust system shall meet the following requirements:

(A) It must be composed of smooth tubing made of typical in-use steel or stainless steel. This tubing shall have a maximum inside diameter of 6.0 in (15 cm).

(B) Short sections (altogether not to exceed 20 percent of the entire tube length) of flexible tubing at connection points are allowed.

[59 FR 48532, Sept. 21, 1994, as amended at 62 FR 47129, Sept. 5, 1997]

§ 86.1327–96 Engine dynamometer test procedures; overview.

(a) The engine dynamometer test procedure is designed to determine the brake specific emissions of hydrocarbons, nonmethane hydrocarbons, carbon monoxide, oxides of nitrogen, particulate, methanol and formaldehyde, as applicable. The test procedure consists of a ''cold'' start test following either natural or forced cool-down periods described in §§ 86.1334 and 86.1335, respectively. A ''hot'' start test follows the ''cold'' start test after a hot soak of 20 minutes. The idle test of subpart P of this part may be run after the ''hot'' start test. The exhaust emissions are diluted with ambient air and a continuous proportional sample is collected for analysis during both the cold- and hot-start tests. The composite samples collected are analyzed either in bags or continuously for hydrocarbons (HC), methane (CH_4) carbon monoxide (CO), carbon dioxide (CO_2), and oxides of nitrogen (NO_X), or in sample collection impingers for methanol (CH_3OH) and sample collection impingers (or cartridges) for formaldehyde (HCHO), as applicable. Measurement of CH_3OH and HCHO may be omitted for 1990 through 1994 model year methanol-fueled engines when a FID calibrated on methanol is used. A bag or continuous sample of the dilution air is similarly analyzed for background levels of hydrocarbon, carbon monoxide, carbon dioxide, and oxides of nitrogen and, if appropriate, methane and/or methanol and/or formaldehyde. In addition, for diesel-cycle engines, particulates are collected on fluorocarbon-coated glass fiber filters or fluorocarbon-based (membrane) filters, and the dilution air may be prefiltered.

(b) Engine torque and rpm command set points shall be issued at 5 (10 Hz recommended) Hz or greater during both the cold and hot start tests. Feedback engine torque and rpm shall be recorded at least once every second during the test.

(c) Using the torque and rpm feedback signals, integrate the brake horsepower with respect to time for the cold and hot cycles. This produces a brake horsepower-hour value that enables the brake-specific emissions to be determined (see §§ 86.1342 and 86.1343).

(d)(1) When an engine is tested for exhaust emissions or is operated for service accumulation on an engine dynamometer, the complete engine shall be tested, with all emission control devices installed and functioning.

(2) For gasoline- and methanol-fueled engines, evaporative emission canisters

must be loaded with fuel vapors and connected to the engine. The canisters used for testing must be of the same design as those used in engine applications.

(3) On air-cooled engines, the fan shall be installed.

(4) Additional accessories (e.g., oil cooler, alternators, air compressors, etc.) may be installed or their loading simulated if typical of the in-use application.

(5) The engine may be equipped with a production-type starter.

(e) Means of engine cooling that will maintain the engine operating temperatures (e.g., temperatures of intake air, oil, water, etc.) at approximately the same temperature as specified by the manufacturer shall be used. An auxiliary fan(s) may be used to maintain engine cooling during operation on the dynamometer. Rust inhibitors and lubrication additives may be used, up to the levels recommended by the additive manufacturer. Antifreeze mixtures and other coolants typical of those approved for use by the manufacturer may be used.

(f) *Exhaust system.* The exhaust system term shall meet the following requirements:

(1) *Gasoline-fueled and methanol-fueled Otto-cycle engines.* A chassis-type exhaust system shall be used. For all catalyst systems, the distance from the exhaust manifold flange(s) to the catalyst shall be the same as in the vehicle configuration unless the manufacturer provides data showing equivalent performance at another location. The catalyst container may be removed during all test sequences prior to the practice cycle, and replaced with an equivalent container having an inactive catalyst support.

(2) Petroleum-fueled and methanol-fueled diesel engines. Either a chassis-type or a facility-type exhaust system or both systems simultaneously may be used. If the engine is equipped with an exhaust aftertreatment device, the exhaust pipe must be the same diameter as found in-use for at least 4 pipe diameters upstream to the inlet of the beginning of the expansion section containing the aftertreatment device. The exhaust backpressure or restriction shall follow the same criteria as in § 86.1330–90(f) and may be set with a valve (muffler omitted). The catalyst container may be removed during all test sequences prior to the practice cycle, and replaced with an equivalent container having an inactive catalyst support.

(i) The engine exhaust systems shall meet the following requirements:

(A) The total length of the tubing from the exit of the engine exhaust manifold, turbocharger outlet or aftertreatment device to the primary dilution tunnel shall not exceed 32 feet (9.8 m).

(B) The initial portion of the exhaust system may consist of a typical in-use (i.e., length, diameter, material, etc.) chassis-type exhaust system.

(C) The distance from the exhaust manifold flange(s) or turbocharger outlet to any exhaust aftertreatment device shall be the same as in the vehicle configuration or within the distance specifications provided by the manufacturer.

(D) For engines which are not equipped with exhaust aftertreatment devices, all tubing in excess of 12 feet (3.7 m) from the exit of the turbocharger or exhaust manifold shall be insulated. For engines equipped with exhaust aftertreatment devices, all tubing after the aftertreatment device which is in excess of 12 feet (3.7 m) shall be insulated.

(E) If the tubing is required to be insulated, the radial thickness of the insulation must be at least 1.0 inch (25 mm). The thermal conductivity of the insulating material must have a value no greater than 0.75 BTU-in/hr/ft^2/ °F (0.065 W/m-K) measured at 700 °F (371 °C).

(F) A smoke meter or other instrumentation may be inserted into the exhaust system tubing. If this option is exercised in the insulated portion of the tubing, then a minimal amount of tubing not to exceed 18 inches may be left uninsulated. However, no more than 12 feet (3.66 m) of tubing can be left uninsulated in total, including the length at the smoke meter.

(ii) The facility-type exhaust system shall meet the following requirements:

(A) It must be composed of smooth tubing made of typical in-use steel or stainless steel. This tubing shall have a

maximum inside diameter of 6.0 in (15 cm).

(B) Short sections (altogether not to exceed 20 percent of the entire tube length) of flexible tubing at connection points are allowed.

[58 FR 16064, Mar. 24, 1993, as amended at 59 FR 48533, Sept. 21, 1994; 60 FR 34374, June 30, 1995; 62 FR 47130, Sept. 5, 1997]

§ 86.1327–98 Engine dynamometer test procedures; overview.

Section 86.1327–98 includes text that specifies requirements that differ from § 86.1327–96. Where a paragraph in § 86.1327–96 is identical and applicable to § 86.1327–98, this may be indicated by specifying the corresponding paragraph and the statement ''[Reserved]. For guidance see § 86.1327–96''.

(a) through (d)(3) [Reserved]. For guidance see § 86.1327–96.

(d)(4) Additional accessories (e.g., oil cooler, alternators, air compressors, etc.) may be installed or their loading simulated if typical of the in-use application. This loading shall be parasitic in nature and, if used, shall be applied during all engine testing operations, including mapping. The accessory work performed shall not be included in the integrated work used in emissions calculations.

(d)(5) through (f) [Reserved]. For guidance see § 86.1327–96.

[62 FR 47130, Sept. 5, 1997]

§ 86.1330–84 Test sequence; general requirements.

(a) The test sequence shown in Figure N84–10 shows the major steps of the test procedure.

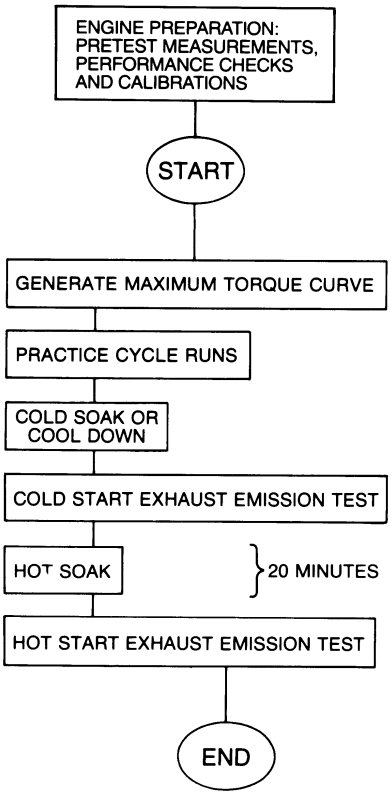

FIGURE N84-10— TEST SEQUENCE

(b) *Control of Air Temperature.* (1) The temperature of the CVS dilution air shall be maintained above 68 °F (20 °C) for Otto cycle engines and between 68 °F and 86 °F (20 °C and 30 °C) for diesel cycle engines throughout the test sequence, except as permitted by § 86.1335–84.

(2) For engines with auxiliary emission control devices which sense or detect ambient air temperature and operate at 68 °F or higher, the test cell ambient air temperature and the temperature of the engine intake air shall be maintained at 77 °F ±9 °F (25 °C ±5 °C) throughout the test sequence. For engines with auxiliary emission control devices which are temperature dependent and operate at 68 °F or higher, the temperature of the engine intake air shall be maintained at 77 °F ±9 °F (25 °C ±5 °C) throughout the test sequence.

(3) For engines which are not equipped with temperature dependent auxiliary emission control devices, the test cell ambient air temperature and the temperature of the engine intake air shall be greater than 20° C (68° F). No corrections will be made in test results or measured engine power if 30° C (86° F) is exceeded.

(4) The only exceptions to these temperatures are as noted in § 86.1335–84.

(5) For engines equipped with an air-to-air intercooler (or any other low temperature charge air cooling device) between the turbocharger compressor and the intake manifold, the procedure for simulating the device in the transient dynamometer test facilities shall follow the SAE Recommended Practice J1937, ''Engine Testing with Low Temperature Charge Air Cooling System in a Dynamometer Test Cell.''

(c) No control of ambient air, engine intake air or CVS dilution air humidity is required.

(d) The idle test of subpart P may be run after completion of the hot start exhaust emission test, if applicable.

(e) The barometric pressure observed during the generation of the maximum torque curve shall not deviate more than 1 inch Hg from the value measured at the beginning of the map. The average barometric pressure observed during the exhaust emission test must be within 1 inch Hg of the average observed during the maximum torque curve generation.

(f) *Diesel-Fueled Engines only*. (1)(i) Air inlet restriction shall be set to a value midway between a clean filter and the maximum restriction specified by the manufacturer. The exhaust restriction normally shall be set at 80 percent of the manufacturer's recommended maximum specified exhaust restriction. The manufacturer shall be liable for emission compliance from the minimum in-use restrictions to the maximum restrictions specified by the manufacturer for that particular engine.

(ii) Inlet depression and exhaust backpressure shall be set with the engine operating at rated speed and wide open throttle, except for the case of inlet depression for naturally aspirated engines, which shall be set at maximum engine speed and nominal zero load (high idle).

(iii) The location at which the inlet depression and exhaust backpressure is measured shall be specified by the manufacturer.

(iv) The settings shall take place during the final mode of the preconditioning prior to determining the maximum torque curve.

(2)(i) The temperature of the inlet fuel to the engine shall not exceed 110 °F (or 130 °F during the first 10 seconds of the hot start test).

(ii) The pressure of the inlet fuel and the point at which it is measured shall be specified by the manufacturer.

(g) Pre-test engine measurements (e.g., governed diesel-fueled engine high idle speed, diesel-fueled engine fuel flows, etc.), pre-test engine performance checks (e.g., verification of actual rated rpm, etc.) and pre-test system calibrations (e.g., inlet and exhaust restrictions, etc.) shall be made prior to generation of the maximum torque curve. This can be done during engine preconditioning, or at the manufacturer's convenience subject to the requirements of good engineering practice.

[48 FR 52210, Nov. 16, 1983, as amended at 52 FR 47872, Dec. 16, 1987; 62 FR 47130, Sept. 5, 1997]

§ 86.1330–90 Test sequence; general requirements.

(a) The test sequence shown in Figure N90–10 shows the major steps of the test procedure, as follows:

Figure N90-10 Test Sequence

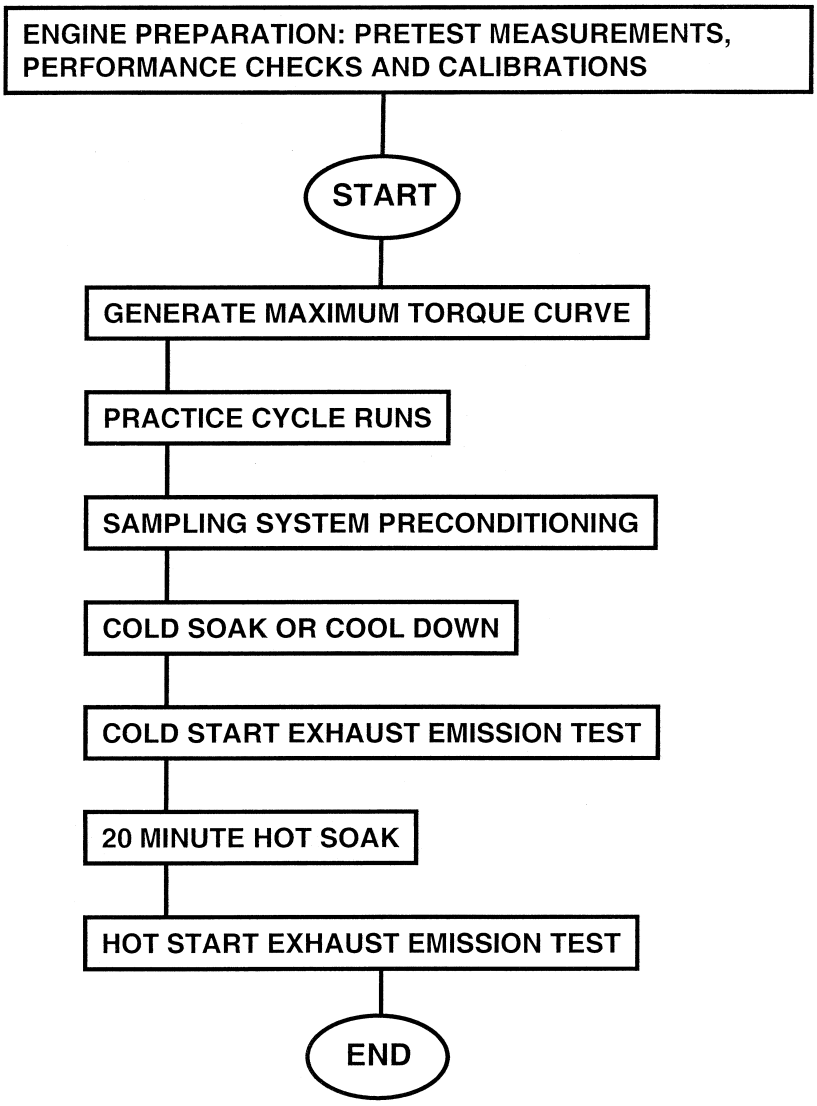

(b) *Control of air temperature.* (1) The temperature of the CVS dilution air shall be maintained at greater than 68 °F (20 °C) for Otto cycle engines and between 68 °F and 86 °F (20 °C and 30 °C) for diesel cycle engines throughout the test sequence, except as permitted by §86.1335–84.

(2) For engines with auxiliary emission control devices which sense or detect ambient air temperature and operate at 68 °F or higher, the test cell ambient air temperature and the temperature of the engine intake air shall be maintained at 77 °F ±9 °F (25 °C ±5 °C) throughout the test sequence. For engines with auxiliary emission control devices which are temperature dependent and operate at 68 °F or higher, the temperature of the engine intake air shall be maintained at 77 °F ±9 °F (25 °C ±5 °C) throughout the test sequence.

(3) For engines which are not equipped with temperature dependent auxiliary emission control devices, the test cell ambient air temperature and the temperature of the engine intake air shall be greater than 68 °F (20 °C). No corrections will be made in test results or measured engine power if 86 °F (30 °C) is exceeded.

(4) The only exceptions to these temperatures are as noted in § 86.1335.

(5) For engines equipped with an air-to-air intercooler (or any other low temperature charge air cooling device) between the turbocharger compressor and the intake manifold, the procedure for simulating the device in the transient dynamometer test facilities shall follow the SAE Recommended Practice J1937, ''Engine Testing with Low Temperature Charge Air Cooling System in a Dynamometer Test Cell.''

(c) No control of ambient air, engine intake or CVS dilution air humidity is required (dehumidification of the dilution air prior to entering the CVS is allowed).

(d) The idle test of subpart P may be run after completion of the hot start exhaust emission test, if applicable.

(e) The barometric pressure observed during the generation of the maximum torque curve shall not deviate more than 1 in. Hg. from the value measured at the beginning of the map. The average barometric pressure observed during the exhaust emission test must be within 1 in. Hg. of the average observed during the maximum torque curve generation.

(f) *Petroleum-fueled and methanol-fueled diesel engines.* (1)(i) Air inlet restriction shall be set to a value midway between a clean filter and the maximum restriction specified by the manufacturer. The exhaust restriction normally shall be set at 80 percent of the manufacturer's recommended maximum specified exhaust restriction. The manufacturer shall be liable for emission compliance from the minimum in-use restrictions to the maximum restrictions specified by the manufacturer for that particular engine.

(ii) Inlet depression and exhaust backpressure shall be set with the engine operating at rated speed and wide open throttle, except for the case of inlet depression for naturally aspirated engines, which shall be set at maximum engine speed and nominal zero load (high idle).

(iii) The location at which the inlet depression and exhaust backpressure is measured shall be specified by the manufacturer.

(iv) The settings shall take place during the final mode of the preconditioning prior to determining the maximum torque curve.

(2)(i) The temperature of the inlet fuel to the engine shall not exceed 110 °F (or 130 °F during the first 10 seconds of the hot start test).

(ii) The pressure of the inlet fuel and the point at which it is measured shall be specified by the manufacturer.

(g) Pre-test engine measurements (e.g., governed petroleum-fueled or methanol-fueled diesel engine high idle speed, petroleum-fueled or methanol-fueled diesel engine fuel flows, etc.), pre-test engine performance checks (e.g., verification of actual rated rpm, etc.) and pre-test system calibrations (e.g., inlet and exhaust restrictions, etc.) shall be made prior to generation of the maximum torque curve. This can be done during engine preconditioning, or at the manufacturer s convenience subject to the requirements of good engineering practice.

[54 FR 14597, Apr. 11, 1989, as amended at 60 FR 34374, June 30, 1995; 62 FR 47131, Sept. 5, 1997; 66 FR 5184, Jan. 18, 2001]

§ 86.1332–90 Engine mapping procedures.

(a) Mount test engine on the engine dynamometer.

(b) Determine minimum mapping speed. The minimum speed is defined as the warm engine curb idle rpm.

(c) Determine maximum mapping speed per the following methodologies. (Note paragraph (d)(1) below.)

(1) *Otto-cycle engines.* (i) For ungoverned engines using the transient operating cycle set forth in paragraph (f)(1) of appendix I to this part, the maximum mapping speed shall be no less than that calculated from the following equation:

$$\text{Maximum speed} = \text{curb idle rpm} + \frac{105\,(\text{measured rated rpm} - \text{curb idle rpm})}{100}$$

or when a 3.0 percent drop in maximum horsepower occurs, whichever of the two is greater

(ii) For ungoverned engines using the transient operating cycle set forth in paragraph (f)(3) of appendix I to this part, the maximum mapping shall be no less than that calculated from the following equation:

$$\text{Maximum speed} = \text{curb idle rpm} + \frac{115\,(\text{measured rated rpm} - \text{curb idle rpm})}{100}$$

or when a 3.0 percent drop in maximum horsepower occurs, whichever of the two is greater

(iii) For governed engines the maximum mapped speed shall be no less than either that speed at which the wide-open throttle torque drops off to zero, or the maximum speed as calculated for ungoverned engines (paragraph (c)(1)(i) of this section)

(2) *Diesel engines.* (i) For ungoverned engines, the maximum mapping speed shall be no less than that calculated from the following equation:

$$\text{Maximum speed} = \text{curb idle rpm} + \frac{113\,(\text{measured rated rpm} - \text{curb idle rpm})}{100}$$

or when a 3.0 drop in horsepower occurs, whichever of the two is greater

(ii) For governed engines, the maximum mapping speed shall be no less than either that speed at which wide-open throttle torque drops off to zero, or the maximum speed as calculated for ungoverned engines (paragraph (c)(2)(i) of this section).

(d) Perform an engine power map.

(1) During engine preparation or warm-up, the engine may be operated such that a preliminary estimate of measured rated rpm can be made.

(2) *Otto-cycle engines.* (i) For a cold engine, start the engine and operate at zero load in accordance with the manufacturer's start-up and warm-up procedures for 1 minute ±30 seconds.

(ii) Operate the engine at a torque equivalent to 10±3 percent of the most recent determination of maximum torque for 4 minutes ±30 seconds at 2000 rpm.

(iii) Operate the engine at a torque equivalent to 55±5 percent of the most recent determination of maximum torque for 35 minutes ±1 minute at 2000 rpm.

(iv) Operate the engine at idle (minimum speed).

(v) Open the throttle fully.

(vi) While maintaining wide-open throttle and full-load, maintain minimum engine speed for at least 15 seconds. Record the average torque during the last 5 seconds.

(vii) In no greater than 100±20 rpm increments, determine the maximum torque curve from minimum speed to maximum speed. Hold each test point for 15 seconds, and record the average torque over the last 5 seconds.

(viii) *Alternate mapping technique.* In place of paragraphs (d)(2) (vi) and (vii) of this section, a continual sweep of rpm is allowed. While operating at wide-open throttle, the engine speed is increased at an average rate of 8 rpm/sec (±1 rpm/sec) from minimum speed to maximum speed. Speed and torque points shall be recorded at a sample rate of at least one point per second.

(ix) Recalculate the maximum speed per paragraph (c)(1) (i) or (ii) of this section using the measured rated speed derived from the new maximum torque curve. If the new maximum speed lies outside the range of speeds encompassed by the actual map, then the map shall be considered void, and another map will need to be run using the newly derived measured rated speed in all calculations.

(x) For warm engines, the entire warm-up procedure specified in paragraphs (d)(2) (i) through (iii) of this section need not be repeated. It is sufficient for an engine already at normal operating temperatures to be operated at the conditions specified in paragraph (d)(2)(iii) of this section until oil and water temperatures are stabilized, after which the procedures of paragraph (d)(2) (iv) through (vii) of this section may be performed. The oil and water temperatures are defined as stabilized if they are maintained within 2 percent of point for 2 minutes.

(3) *Diesel engines.* (i) If the engine is cold, start and operate at free idle for 2 to 3 minutes.

(ii) Operate the engine at approximately 50 percent power at the peak torque speed for 5 to 7 minutes.

(iii) Operate the engine at rated speed and wide-open throttle for 25 to 30 minutes.

(iv) *Option.* The engine may be preconditioned by operating at rated speed and maximum horsepower until the oil and water temperatures are stabilized. The temperatures are defined as stabilized if they are maintained within 2 percent of point for 2 minutes. This optional procedure may be substituted for paragraph (d)(3)(iii) of this section.

(v) Unload the engine and operate at the curb idle speed.

(vi) Operate the engine at wide open throttle and minimum engine speed. Increase the engine speed at an average rate of 8 rpm/sec (±1 rpm/sec) from minimum to maximum speed. Engine speed and torque points shall be recorded at a sample rate of at least one point per second.

(vii) Recalculate the maximum speed per paragraph (c)(2) (i) or (ii) of this section using the measured rated speed derived from the new maximum torque curve. If the new maximum speed lies outside the range of speeds encompassed by the actual map, then the map shall be considered void. The entire mapping procedure shall be repeated, using the newly derived measured rated speed in all calculations.

(viii) For warm engines, the entire warm-up procedure specified in paragraphs (d)(3) (i) through (iv) of this section need not be repeated. It is sufficient for an engine already at normal operating temperatures to be operated per the requirements of paragraph (d)(3)(iv) of this section, after which the procedures of paragraph (d)(3) (v) through (vi) of this section may be performed.

(e) Mapping curve generation.

(1) *Otto-cycle engines.* (i) Fit all data points recorded under paragraphs (d)(2) (vi) and (vii) of this section (100 rpm increments) with a cubic spline, Akima, or other technique approved in advance by the Administrator. The resultant curve shall be accurate to within ±1.0 ft-lbs of all recorded engine torques.

(ii) All points generated under the continuous rpm sweep by paragraphs (d)(2) (vi) and (viii) of this section shall be connected by linear interpolation between points.

(iii) For governed engines, all points above the maximum speed (see paragraph (c)(1)(ii) of this section) shall be assigned maximum torque values of zero for purposes of cycle generation.

(iv) For all engines, all speed points below the minimum speed shall be assigned a maximum torque value equal to that observed at minimum speed for purposes of cycle generation.

(v) The torque curve resulting from paragraphs (e)(1) (i) through (iv) of this section is the mapping curve and will be used to convert the normalized torque values in the engine cycle (*see* paragraph (f)(1) of appendix I to this part) to actual torque values for the test cycle.

(2) *Diesel engines*. (i) Connect all data points recorded under paragraph (d)(3)(vi) of this section using linear interpolation between points.

(ii) For governed engines, all points above the maximum speed (*see* paragraph (c)(2)(ii) of this section) shall be assigned maximum torque values of zero for purposes of cycle generation.

(iii) For all engines, all speed points below the minimum speed shall be assigned a maximum torque value equal to that observed at the minimum speed for purposes of cycle generation.

(iv) The torque curve resulting from paragraphs (e)(2) (i) through (iii) of this section is the mapping curve and will be used to convert the normalized torque values in the engine cycle (*see* paragraph (f)(2) of appendix I to this part) into actual torque values for the test cycle.

(f) *Alternate mapping*. If a manufacturer believes that the above mapping techniques are unsafe or unrepresentative for any given engine or engine family, alternate mapping techniques may be used. These alternate techniques must satisfy the intent of the specified mapping procedures to determine the maximum available torque at all engine speeds achieved during the test cycles. Deviations from the mapping techniques specified in this section for reasons of safety or representativeness shall be reported per § 86.1344(e)(6), along with the justification for their use. In no case, however, shall descending continual sweeps of rpm be used for governed or turbocharged engines.

(g) *Replicate Tests*. An engine need not be mapped before each and every cold cycle test. An engine shall be remapped prior to a cold cycle test if:

(1) An unreasonable amount of time has transpired since the last map, as determined by engineering judgment, or

(2) The barometric pressure prior to the start of the cold cycle test has changed more than 1 in hg. from the average barometric pressure observed during the map, or

(3) Physical changes or recalibrations have been made to the engine which may potentially affect engine performance.

[54 FR 14597, Apr. 11, 1989, as amended at 59 FR 48533, Sept. 21, 1994]

§ 86.1333–90 Transient test cycle generation.

(a) The heavy-duty transient engine cycles for Otto-cycle and diesel engines are listed in appendix I ((f) (1), (2) and (3)) to this part. These second-by-second listings represent torque and rpm maneuvers characteristic of heavy-duty engines. Both rpm and torque are normalized (expressed as a percentage of maximum) in these listings.

(1) To unnormalize rpm, use the following equation:

$$\text{Actual rpm} = \frac{\%\ \text{rpm (Measured rated rpm} - \text{Curb idle rpm)}}{100} + \text{Curb idle rpm}$$

The method of calculating measured rated rpm is detailed in paragraph (g) of this section.

(2) Torque is normalized to the maximum torque at the rpm listed with it. Therefore, to unnormalize the torque values in the cycle, the maximum torque curve for the engine in question must be used. The generation of the maximum torque curve is described in § 86.1332.

(3) The EPA Engine Dynamometer Schedule for Heavy Duty Diesel Engines listed in appendix I (f)(2) contains torque points referred to as ''closed rack motoring.'' For reference cycle calculation torque points shall take on unnormalized values determined in either of the following three ways:

(i) Negative 40 percent of the positive torque available at the associated speed point. The generation of this positive maximum torque curve is described in § 86.1332.

(ii) Map the amount of negative torque required to motor the engine between idle and maximum mapping speed and use this map to determine the amount of negative torque required at the associated speed point.

(iii) Determine the amount of negative torque required to motor the engine at idle and rated speeds and linearly interpolate using these two points.

(b) *Example of the unnormalization procedure.* The following test point shall be unnormalized:

Percent RPM	Percent Torque
43	82

Given the following values:

Measured Rated rpm = 3800.

Curb Idle rpm = 600.

(1) *Calculate actual rpm:*

$$\text{Actual rpm} = \frac{\%\ \text{rpm (measured rated rpm} - \text{curb idle rpm)}}{100} + \text{curb idle rpm}$$

$$= \frac{43\,(3800 - 600)}{100} + 600$$

$$= \frac{43\,(3800 - 600)}{1976} + 600$$

(2) *Determine actual torque:* Determine the maximum observed torque at 1976 rpm from the maximum torque curve. Then multiply this value (*e.g.*, 358 ft-lbs) by 0.82. This results in an actual torque of 294 ft-lbs.

(c) Engine speed and torque shall be recorded at least once every second during the cold start test and hot start test. The torque and rpm feedback signals may be filtered.

(d) Idle Speed Enhancement Devices (*e.g.* cold idle, alternator idle, etc.). For an engine equipped with an idle speed enhancement device, the zero percent speed specified in the engine dynamometer schedules (appendix I (f)(1), (f)(2), or (f)(3) to this part) does not apply. The idle speed shall be the speed that results from the proper operation of the engine's idle speed enhancement device.

(1) During idle speed enhancement device operation, a manual transmission engine shall be allowed to idle at whatever speed is required to target a feedback torque equal to zero (using, for example, clutch disengagement, speed to torque control switching, software overrides, etc.) at those points in appendix I(f)(1), (f)(2), or (f)(3) to this part where both reference speed and reference torque are zero percent values. For each idle segment that is ten seconds or longer, the average feedback torque must be within ±10 ft-lbs of zero. To allow for transition, up to the first four seconds may be deleted from each idle segment calculation.

(2) During idle speed enhancement device operation, an automatic transmission engine shall be allowed to idle at whatever speed is required to target a feedback torque equal to CITT (see paragraph (e)(2) of this section for definition of CITT) at those points in appendix I(f)(1), (f)(2), or (f)(3) to this part where both reference speed and reference torque are zero percent values. For each idle segment that is ten seconds or longer, the average feedback torque must be within ±10 ft-lbs of CITT. To allow for transition, up to the first four seconds may be deleted from each idle segment calculation.

(e) *Automatic transmissions.* The reference cycles in paragraphs (f) (1) and (2) of appendix I to this part shall be altered for test engines intended primarily for use with automatic transmissions.

(1) Zero percent speed for automatic transmission engines is defined as curb idle rpm (*i.e.*, in-vehicle, coupled with automatic transmission in gear).

(2) All zero-percent speed, zero-percent torque points (idle points) shall be

modified to zero percent speed, Curb Idle Transmission Torque (CITT), except as permitted in §86.1337–90(a)(9). Also, all points with speed equal to or less than zero percent and torque less than CITT shall be modified to CITT. Motoring torque shall remain unchanged. In order to provide a smooth torque transition, all consecutive torque points that are between 0 and CITT shall be changed to CITT if the first of these is preceded or the last of these is succeeded by idle points. The manufacturer's specified CITT shall be based upon that value observed in typical applications at the mean of the manufacturers' specified idle speed range at stabilized temperature conditions.

(f) *Clutch operation*. Manual transmission engines may be tested with a clutch. If used, the clutch shall be disengaged at all zero percent speeds, zero percent torque points, but may be engaged up to two points preceeding a non-zero point, and may be engaged for time segments with zero percent speed and torque points of durations less than four seconds. (*See* §86.1341 for allowances in the cycle validation criteria.)

(g) *Measured rated rpm*. The measured rated rpm corresponds to the 100 percent rpm values specified in the reference cycles (paragraphs (f) (1) and (2) of appendix I to this part). It is generally intended to represent the rpm at which maximum brake horsepower occurs. For the purposes of this test sequence, it shall either be defined as the manufacturer's specified rated speed, or calculated in the following way, whichever yields the higher speed:

(1) From the maximum torque curve generated per §86.1332, find the maximum observed brake horsepower of the engine.

(2) Calculate 98 percent of the observed maximum brake horsepower, and determine from the maximum torque curve the highest and lowest engine rpms at which this brake horsepower is observed.

(3) The highest and lowest of the 98 percent power rpms represent the endpoints of an rpm range. The midpoint of this range shall be considered the measured rated rpm for cycle generation purposes.

[54 FR 14599, Apr. 11, 1989, as amended at 62 FR 47131, Sept. 5, 1997; 63 FR 24449, May 4. 1998; 65 FR 8279, Feb. 18, 2000]

§86.1333–2010 Transient test cycle generation.

(a) *Generating transient test cycles*. The heavy-duty transient engine cycles for Otto-cycle and diesel engines are listed in Appendix I((f) (1), (2) and (3)) to this part. These second-by-second listings represent torque and rpm maneuvers characteristic of heavy-duty engines. Both rpm and torque are normalized (expressed as a percentage of maximum) in these listings.

(1) To unnormalize rpm, use the following equations:

(i) For diesel engines:

$$\text{Actualrpm} = \frac{\%\text{rpm} \cdot (\text{MaxTestSpeed} - \text{CurbIdleSpeed})}{112} + \text{CurbIdleSpeed}$$

Where:

MaxTestSpeed = the maximum test speed as calculated in 40 CFR part 1065.

(ii) For Otto-cycle engines:

$$\text{Actualrpm} = \frac{\%\text{rpm} \cdot (\text{MaxTestSpeed} - \text{CurbIdleSpeed})}{112} + \text{CurbIdleSpeed}$$

Where:

MaxTestSpeed = the maximum test speed as calculated in 40 CFR part 1065.

(2) Torque is normalized to the maximum torque at the rpm listed with it. Therefore, to unnormalize the torque values in the cycle, the maximum torque curve for the engine in question must be used. The generation of the maximum torque curve is described in 40 CFR part 1065.

(b) *Example of the unnormalization procedure.* Unnormalize the following test point, given Maximum Test speed = 3800 rpm and Curb Idle Speed = 600 rpm.

$$\frac{\text{PercentRPM}}{43}\ \frac{\text{PercentTorque}}{82}$$

(1) Calculate actual rpm:

$$\text{Actualrpm} = \frac{43 \cdot (3800 - 600)}{112} + 600 = 1{,}829\text{rpm}$$

(2) Determine actual torque: Determine the maximum observed torque at 1829 rpm from the maximum torque curve. Then multiply this value (e.g., 358 ft-lbs) by 0.82. This results in an actual torque of 294 ft-lbs.

(c) *Clutch operation.* Manual transmission engines may be tested with a clutch. If used, the clutch shall be disengaged at all zero percent speeds, zero percent torque points, but may be engaged up to two points preceding a non-zero point, and may be engaged for time segments with zero percent speed and torque points of durations less than four seconds. (See 40 CFR 1065.514 for allowances in the cycle validation criteria.)

[70 FR 40438, July 13, 2005]

§ 86.1334–84 Pre-test engine and dynamometer preparation.

(a) *Control system calibration.* (1) Before the cold soak or cool down:

(i) Final calibration of the dynamometer and throttle control systems may be performed. These calibrations may consist of steady-state operations and/or actual practice cycle runs, and must be completed before sampling system preconditioning (if applicable).

(ii) Conduct sampling system preconditioning for diesel engines (optional for model years prior to 2007) by operating the engine at a condition of rated-speed, 100 percent torque for a minimum of 20 minutes while simultaneously operating the CVS and secondary dilution system and taking particulate matter emissions samples from the secondary dilution tunnel . Particulate sample filters need not be stabilized or weighed, and may be discarded. Filter media may be changed during conditioning as long as the total sampled time through the filters and sampling system exceeds 20 minutes. Flow rates shall be set at the approximate flow rates selected for transient testing. Torque shall be reduced from 100 percent torque while maintaining the rated speed condition as necessary to prevent exceeding the maximum sample zone temperature specifications of § 86.1310–2007.

(2) Following sampling system preconditioning cycle, the engine shall be cooled per § 86.1335–90.

(b) [Reserved]

[48 FR 52210, Nov. 16, 1983, as amended at 49 FR 48145, Dec. 10, 1984; 52 FR 47874, Dec. 16, 1987; 62 FR 47131, Sept. 5, 1997; 66 FR 5186, Jan. 18, 2001]]

§ 86.1335–90 Cool-down procedure.

(a) This cool-down procedure applies to Otto-cycle and diesel engines.

(b) Engines may be soaked at ambient conditions. No substances or fluids may be applied to the engine's internal or external surfaces except for water and air as prescribed in paragraphs (c) and (d) of this section.

(c) For water-cooled engines, two types of cooling are permitted:

(1) Water may be circulated through the engine's water coolant system.

(i) The coolant may be flowed in either direction and at any desired flow rate. The thermostat may be removed or blocked open during the cool-down but must be restored before the exhaust emissions test begins.

(ii) The temperature of the circulated or injected water shall be at least 10 °C (50 °F). In addition, the temperature of

the cooling water shall not exceed 30 °C (86 °F) during the last 30 minutes of the cool-down.

(iii) Only water, including the use of a building's standard water supply, or the coolant type that is already in the engine (per § 86.1327–90(e)) is permitted for cool-down purposes.

(2) Flows of air may be directed at the exterior of the engine.

(i) The air shall be directed essentially uniformly over the exterior surface of the engine at any desired flow rate.

(ii) The temperature of the cooling air shall not exceed 86 °F (30 °C) during the last 30 minutes of the cool-down, but may be less than 68 °F (20 °C) at any time.

(d) For air-cooled engines, only cooling as prescribed in paragraph (c)(2) of this section is permitted.

(e)(1) The cold cycle exhaust emission test may begin after a cool-down only when the engine oil and water temperatures are stabilized between 68 °F and 86 °F (20 °C and 30 °C) for a minimum of fifteen minutes.

(i) These temperature measurements are to be made by temperature measurement devices immersed in the sump oil and in the thermostat housing or cylinder head cooling circuit, the sensor parts of which are not in contact with any engine surface.

(ii) The flow of oil and water shall be shut off during this measurement. Air flow, except as necessary to keep the cell temperature between 68 °F and 86 °F (20 °C and 30 °C), shall be shut off. No engine oil change is permitted during the test sequence.

(2) Direct cooling of engine oil through the use of oil coolers or heat exchangers is permitted. The cold cycle emission test may begin only when the requirements in paragraph (e)(1)(ii) are met.

(3) Any other means for the direct cooling of the engine oil must be approved in advance by the Administrator.

(f)(1) The cold cycle exhaust emission test for engines equipped with exhaust aftertreatment devices may begin after a cool-down only when the aftertreatment device is 77 °F ±9 °F (25 °C ±5 °C), in addition to the temperature restrictions in paragraph (e) of this section. For catalysts, this temperature must be measured at the outlet of the catalyst bed.

(2) Exhaust aftertreatment device cool-down may be accomplished in whatever manner and using whatever coolant deemed appropriate by proper engineering judgment. The aftertreatment device, engine, and exhaust piping configurations shall not be separated, altered, or moved in any way during the cool-down.

(g) For engines with auxiliary emission control devices which are temperature dependent, the cold start shall not begin until the temperature readings of the auxiliary emission control devices are stable at 77 °F ±9 °F (25 °C ±5 °C).

(h) At the completion of the cool-down all of the general requirements specified in § 86.1330, the oil temperature specification set forth in paragraph (e) of this section, and the catalyst temperature specifications in paragraph (f) of this section must be met before the cold cycle exhaust emission test may begin.

[62 FR 47131, Sept. 5, 1997]

§ 86.1336–84 Engine starting, restarting, and shutdown.

(a) The engine shall be started according to the manufacturer's recommended starting procedure in the owner's manual, using either a production starter motor or the dynamometer. The speed at which the engine is cranked (motored) with the dynamometer shall be equal to the cranking speed (nominal speed ±10 percent) in the vehicle with a fully charged battery. The time taken to accelerate the engine to cranking speed by the dynamometer shall be equal (nominal ±0.5 seconds) to the time required with a starter motor. Motoring by the dynamometer shall be terminated not more than one second after the engine starts. The 24 ±1-second free idle period, and declutching if applicable, shall begin when the engine is determined to have started.

(1) Engines equipped with automatic chokes shall be operated according to the manufacturer's operating instructions in the owner's manual, including choke setting and ''kick-down'' from cold fast idle.

(2) Engines equipped with manual chokes shall be operated according to the manufacturer's operating instructions in the owner's manual.

(3) The operator may use the choke, throttle, etc. where necessary to keep the engine running.

(4) If the manufacturer's operating instructions in the owner's manual do not specify a warm engine starting procedure, the engine (automatic and manual choke engines) shall be started by depressing the throttle half way and cranking the engine until it starts.

(b)(1) If the engine does not start after 15 seconds of cranking, cranking shall cease and the reason for failure to start shall be determined. The gas flow measuring device (or revolution counter) on the constant volume sampler (and the hydrocarbon integrator when testing diesel-fueled engines) shall be turned off during this diagnostic period. In addition, either the CVS should be turned off or the exhaust tube disconnected from the tailpipe during the diagnostic period. If failure to start is an operational error, the engine shall be rescheduled for testing from a cold start.

(2) If longer cranking times are necessary and recommended to the ultimate purchaser, such cranking times may be used in lieu of the 15-second limit, provided the owner's manual and the service repair manual indicate that the longer cranking times are normal.

(3) If a failure to start occurs during the cold portion of the test and is caused by an engine malfunction, corrective action of less than 30 minutes duration may be taken (according to § 86.084–25), and the test continued. The sampling system shall be reactivated at the same time cranking begins. When the engine starts, the timing sequence shall begin. If failure to start is caused by engine malfunction and the engine cannot be started, the test shall be voided and corrective action may be taken according to § 86.084–25.

(4) If a failure to start occurs during the hot start portion of the test and is caused by engine malfunction, the engine must be started within one minute of key on. The sampling system shall be reactivated at the same time cranking begins. When the engine starts, the transient engine cycle timing sequence shall begin. If the engine cannot be started within one minute of key on, the test shall be voided, corrective action taken (according to § 86.084–25), and the engine rescheduled for testing.

(c) *Engine stalling.* (1) If the engine stalls during the initial idle period of either the cold or hot start test, the engine shall be restarted immediately using the appropriate cold or hot starting procedure and the test continued.

(2) If the engine stalls anywhere in the cold cycle, except in the initial idle period, the test shall be voided.

(3) If the engine stalls on the hot cycle portion of the test at any time other than the initial idle, the engine may be shut off and resoaked for 20 minutes. The hot cycle may then be rerun. Only one hot start resoak and restart is permitted.

(d) *Engine shutdown.* Engine shutdown shall be performed in accordance with manufacturer's specifications.

(e) *Test equipment malfunction*—(1) *Gasoline- and methanol-fueled engines.* If a malfunction occurs in any of the required test equipment during the test run, the test shall be voided.

(2) *Diesel-fueled, natural gas-fueled and liquefied petroleum gas-fueled engines.* (i) If a malfunction occurs in any of the required test equipment during the cold cycle portion of the test, the test shall be voided.

(ii) If a malfunction occurs in any of the required test equipment (computer, gaseous emissions analyzer, etc.) during the hot cycle portion of the test, complete the full engine cycle before engine shut-down then resoak for 20 minutes.

(A) If the test equipment malfunction can be corrected before the resoak period has been completed, the hot cycle portion of the test may be rerun.

(B)(*1*) If the test equipment malfunction is corrected after the completion of the resoak period, then the preconditioning cycle must be run before the hot cycle. This consists of a full 20 minute transient cycle followed by a 20 minute soak and then the for-record hot cycle.

(*2*) In no case can the start of the cold cycle and the start of the hot

cycle be separated by more than 4 hours.

(Secs. 202, 203, 206, 207, 208, 301a, Clean Air Act, as amended; 42 U.S.C. 7521, 7522, 7525, 7541, 7542, 7601a)

[48 FR 52210, Nov. 16, 1983, as amended at 49 FR 48145, Dec. 10, 1984; 50 FR 10694, Mar. 15, 1985; 52 FR 47874, Dec. 16, 1987; 58 FR 16065, Mar. 24, 1993; 59 FR 48533, Sept. 21, 1994]

§ 86.1337–90 Engine dynamometer test run.

(a) The following steps shall be taken for each test:

(1) Prepare the engine, dynamometer, and sampling system for the cold-start test. Change filters, etc., and leak check as necessary.

NOTE: For a single dilution particulate system, a propane check will not reveal a pressure side leak (that portion of the system downstream of the pump) since the volume concentration in ppm will not change if a portion of the sample is lost. A separate leak check is needed.

A leak check of a filter assembly that has only one seal ring in contact with the filter media will not detect a leak when tested under vacuum. A pressure leak test should be performed.

(2) Connect evacuated sample collection bags to the dilute exhaust and dilution air sample collection systems.

(3) For methanol-fueled vehicles, install fresh methanol and formaldehyde impingers (or cartridges) in the exhaust and dilution air sample systems for methanol and formaldehyde. A single dilution air sample covering the total test period may be utilized for methanol and formaldehyde background. (Background measurements of methanol and formaldehyde may be omitted and concentrations assumed to be zero for calculations in § 86.1344.)

(4) Attach the CVS to the engine exhaust system any time prior to starting the CVS.

(5) Start the CVS (if not already on), the sample pumps (except for the particulate sample pump(s), if applicable), the engine cooling fan(s), and the data collection system. The heat exchanger of the constant volume sampler (if used), and the heated components of any continuous sampling system(s) (if applicable) shall be preheated to their designated operating temperatures before the test begins. (*See* § 86.1340(e) for continuous sampling procedures.)

(6) Adjust the sample flow rates to the desired flow rates and set the CVS gas flow measuring devices to zero.

NOTE: CFV-CVS sample flow rate is fixed by the venturi design.

(7) For diesel engines tested for particulate emissions, carefully install a clean particulate sample filter into each of the filter holders and install the assembled filter holders in the sample flow line (filter holders may be preassembled).

(8) Follow the manufacturers choke and throttle instructions for cold starting. Simultaneously start the engine and begin exhaust and dilution air sampling. For petroleum-fueled diesel engines (and natural gas-fueled, liquified petroleum gas-fueled or methanol-fueled diesels, if used), turn on the hydrocarbon and NO_X (and CO and CO_2. if continuous) analyzer system integrators (if used), and turn on the particulate sample pumps and indicate the start of the test on the data collection medium.

(9) As soon as it is determined that the engine is started, start a ''free idle'' timer. Allow the engine to idle freely with no-load for 24 ±1 seconds. This idle period for automatic transmission engines may be interpreted as an idle speed in neutral or park. All other idle conditions shall be interpreted as an idle speed in gear. It is permissible to lug the engine down to curb idle speed during the last 8 seconds of the free idle period for the purpose of engaging dynamometer control loops.

(10) Begin the transient engine cycles such that the first non-idle record of the cycle occurs at 25±1 seconds. The free idle time is included in the 25±1 seconds.

(i) During diesel particulate sampling it must be demonstrated that the ratio of main tunnel flow to particulate sample flow does not change by more than ±5.0 percent of its set point value (except for the first 10 seconds of sampling).

NOTE: For double dilution operation, sample flow is the net difference between the flow rate through the sample filters and the secondary dilution air flow rate.

(ii) Record the average temperature and pressure at the gas meter(s) or flow instrumentation inlet, where needed to calculate flow. If the set flow rate cannot be maintained because of high particulate loading on the filter, the test shall be terminated. The test shall be rerun using a lower flow rate and/or a larger diameter filter.

(11) Begin the transient engine cycles such that the first non-idle record of the cycle occurs at 25 ±1 seconds. The free idle time is included in the 25 ±1 seconds.

(12) On the last record of the cycle, cease sampling. Immediately turn the engine off, and start a hot-soak timer. Also turn off the particulate sample pumps, the gas flow measuring device(s) and any continuous analyzer system integrators and indicate the end of the test on the data collection medium. Sampling systems should continue to sample after the end of the test cycle until system response times have elapsed.

(13) Immediately after the engine is turned off, turn off the engine cooling fan(s) if used, and the CVS blower (or disconnect the exhaust system from the CVS). As soon as possible, transfer the ''cold start cycle'' exhaust and dilution air bag samples to the analytical system and process the samples according to § 86.1340. A stabilized reading of the exhaust sample on all analyzers shall be obtained within 20 minutes of the end of the sample collection phase of the test. Analysis of the methanol and formaldehyde samples shall be obtained within 24 hours of the end of the sample collection period. For petroleum-fueled and methanol-fueled diesel engines, carefully remove the filter holder from the sample flow apparatus, and remove each particulate sample filter from its holder and invert the secondary filter and place it stain side to stain side on top of the primary filter. Place the filter pair in a petri dish and cover.

(14) Allow the engine to soak for 20±1 minutes.

(15) Prepare the engine and dynamometer for the hot start test.

(16) Connect evacuated sample collection bags to the dilute exhaust and dilution air sample collection systems.

(17) Install fresh methanol and formaldehyde impingers (or capsules) in the exhaust and dilution air sample systems for methanol and formaldehyde.

(18) Start the CVS (if not already on) or connect the exhaust system to the CVS (if disconnected). Start the sample pumps (except the particulate sample pump(s), if applicable), the engine cooling fan(s) and the data collection system. The heat exchanger of the constant volume sampler (if used) and the heated components of any continuous sampling system(s) (if applicable) shall be preheated to their designated operating temperatures before the test begins. See § 86.1340(e) for continuous sampling procedures.

(19) Adjust the sample flow rates to the desired flow rate and set the CVS gas flow measuring devices to zero.

(20) For diesel engines tested for particulate, carefully install a clean particulate filter in each of the filter holders and install assembled filter holders in the sample flow line (filter holders may be preassembled).

(21) Follow the manufacturer's choke and throttle instruction for hot starting. Simultaneously start the engine and begin exhaust and dilution air sampling. For diesel engines, turn on the hydrocarbon and NO_X (and CO and CO_2. if continuous) analyzer system integrators (if used), indicate the start of the test on the data collection medium, and turn on the particulate sample pump(s).

(22) As soon as it is determined that the engine is started, start a ''free idle'' timer.

(23) Allow the engine to idle freely with no-load for 24 ±1 seconds. The provisions and interpretations of paragraph (a)(9) of this section apply.

(24) Begin the transient-engine cycle such that the first non-idle record of the cycle occurs at 25±1 seconds. The free idle is included in the 25±1 seconds.

(25) On the last record of the cycle, allow sampling system response times to elapse and cease sampling. Turn off the particulate sample pump(s) (if appropriate), the gas flow measuring device(s) and any continuous analyzer system integrators and indicate the end of the test on the data collection medium.

(26) As soon as possible, transfer the ''hot start cycle'' exhaust and dilution air bag samples to the analytical system and process the samples according to § 86.1340. A stabilized reading of the exhaust sample on all analyzers shall be obtained within 20 minutes of the end of the sample collection phase of the test. Analyze the methanol and formaldehyde samples within 24 hours. (If it is not possible to perform analysis within 24 hours, the samples should be stored in a cold (approximately 0 °C) dark environment until analysis can be performed). For petroleum-fueled and methanol-fueled diesel engines, carefully remove the assembled filter holder from the sample flow lines and remove each particulate sample filter from its holder and invert the secondary filter and place it stain side to stain side on top of the primary filter. Place the filter pairs in a clean petri dish and cover as soon as possible. Within 1 hour after the end of the hot start phase of the test, transfer the particulate filters to the weighing chamber for post-test conditioning.

(27) The CVS and the engine may be turned off, if desired.

(b) The procedure in paragraph (a) of this section is designed for one sample bag for the cold start portion and one for the hot start portion. It is also permissible to use more than one sample bag per test portion.

(c) If a dynamometer test run is determined to be void, corrective action may be taken. The engine may then be allowed to cool (naturally or forced) and the dynamometer test rerun per paragraph (a) or (b) of this section.

[54 FR 14600, Apr. 11, 1989, as amended at 59 FR 48533, Sept. 21, 1994; 60 FR 34374, June 30, 1995; 62 FR 47132, Sept. 5, 1997]

§ 86.1337–96 Engine dynamometer test run.

(a) The following steps shall be taken for each test:

(1) *Prepare for the cold-start test.* (i) For gasoline- and methanol-fueled engines only, evaporative emission canisters shall be prepared for use in this testing in accordance with the procedures specified in § 86.1232–96 (h) or (j). The size of the canisters used for testing shall correspond with the largest canister capacity expected in the range of vehicle applications for each engine. The Administrator may, at his discretion, use a smaller canister capacity. Attach the evaporative emission canister(s) to the engine, using the canister purge plumbing and controls employed in vehicle applications of the engine being tested. Plug the canister port that is normally connected to the fuel tank.

(ii) Prepare the engine, dynamometer, and sampling system.

(iii) Change filters, etc., and leak check as necessary. For a single dilution particulate system, a propane check will not reveal a pressure side leak (that portion of the system downstream of the pump) since the volume concentration in ppm will not change if a portion of the sample is lost. A separate leak check is needed. A leak check of a filter assembly that has only one seal ring in contact with the filter media will not detect a leak when tested under vacuum. A pressure leak test should be performed.

(2) Connect evacuated sample collection bags to the dilute exhaust and dilution air sample collection systems.

(3) For methanol-fueled vehicles, install fresh methanol and formaldehyde impingers (or cartridges) in the exhaust and dilution air sample systems for methanol and formaldehyde. A single dilution air sample covering the total test period may be utilized for methanol and formaldehyde background. (Background measurements of methanol and formaldehyde may be omitted and concentrations assumed to be zero for calculations in § 86.1344.)

(4) Attach the CVS to the engine exhaust system any time prior to starting the CVS.

(5) Start the CVS (if not already on), the sample pumps (except for the particulate sample pump(s), if applicable), the engine cooling fan(s), and the data collection system. The heat exchanger of the constant volume sampler (if used), and the heated components of any continuous sampling system(s) (if applicable) shall be preheated to their designated operating temperatures before the test begins. (See § 86.1340(e) for continuous sampling procedures.)

(6) Adjust the sample flow rates to the desired flow rates and set the CVS gas flow measuring devices to zero.

CFV-CVS sample flow rate is fixed by the venturi design.

(7) For diesel engines tested for particulate emissions, carefully install a clean particulate sample filter into each of the filter holders and install the assembled filter holders in the sample flow line (filter holders may be preassembled).

(8) Follow the manufacturer's choke and throttle instructions for cold starting. Simultaneously start the engine and begin exhaust and dilution air sampling. For petroleum-fueled diesel engines (and natural gas-fueled, liquified petroleum gas-fueled or methanol-fueled diesels, if used) turn on the hydrocarbon and NO_X (and CO and CO_2. if continuous) analyzer system integrators (if used), and turn on the particulate sample pumps and indicate the start of the test on the data collection medium.

(9) As soon as it is determined that the engine is started, start a ''free idle'' timer. Allow the engine to idle freely with no-load for 24±1 seconds. This idle period for automatic transmission engines may be interpreted as an idle speed in neutral or park. All other idle conditions shall be interpreted as an idle speed in gear. It is permissible to lug the engine down to curb idle speed during the last 8 seconds of the free idle period for the purpose of engaging dynamometer control loops.

(10) Begin the transient engine cycles such that the first non-idle record of the cycle occurs at 25±1 seconds. The free idle time is included in the 25±1 seconds.

(i) During diesel particulate sampling it must be demonstrated that the ratio of main tunnel flow to particulate sample flow does not change by more than ±5.0 percent of its set point value (except for the first 10 seconds of sampling). For double dilution operation, sample flow is the net difference between the flow rate through the sample filters and the secondary dilution air flow rate.

(ii) Record the average temperature and pressure at the gas meter(s) or flow instrumentation inlet, where needed to calculate flow. If the set flow rate cannot be maintained because of high particulate loading on the filter, the test shall be terminated. The test shall be rerun using a lower flow rate and/or a larger diameter filter.

(11) Begin the transient engine cycles such that the first non-idle record of the cycle occurs at 25±1 seconds. The free idle time is included in the 25±1 seconds.

(12) On the last record of the cycle, cease sampling. Immediately turn the engine off and start a hot-soak timer. Also turn off the particulate sample pumps, the gas flow measuring device(s) and any continuous analyzer system integrator and indicate the end of the test on the data collection medium. Sampling systems should continue to sample after the end of the test cycle until system response times have elapsed.

(13) Immediately after the engine is turned off, turn off the engine cooling fan(s) if used, and the CVS blower (or disconnect the exhaust system from the CVS). As soon as possible, transfer the ''cold start cycle'' exhaust and dilution air bag samples to the analytical system and process the samples according to § 86.1340. A stabilized reading of the exhaust sample on all analyzers shall be obtained within 20 minutes of the end of the sample collection phase of the test. Analysis of the methanol and formaldehyde samples shall be obtained within 24 hours of the end of the sample collection period. For petroleum-fueled and methanol-fueled diesel engines, carefully remove the filter holder from the sample flow apparatus, remove each particulate sample filter from its holder and invert the secondary filter and place it stain side to stain side on top of the primary filter. Place the filter pair in a petri dish and cover.

(14) Allow the engine to soak for 20±1 minutes.

(15) Prepare the engine and dynamometer for the hot start test.

(16) Connect evacuated sample collection bags to the dilute exhaust and dilution air sample collection systems.

(17) Install fresh methanol and formaldehyde impingers (or capsules) in the exhaust and dilution air sample systems for methanol and formaldehyde.

(18) Start the CVS (if not already on) or connect the exhaust system to the CVS (if disconnected). Start the sample

pumps (except the particulate sample pump(s), if applicable), the engine cooling fan(s) and the data collection system. The heat exchanger of the constant volume sampler (if used) and the heated components of any continuous sampling system(s) (if applicable) shall be preheated to their designated operating temperatures before the test begins. See §86.1340(e) for continuous sampling procedures.

(19) Adjust the sample flow rates to the desired flow rate and set the CVS gas flow measuring devices to zero.

(20) For diesel engines tested for particulate, carefully install a clean particulate filter in each of the filter holders and install assembled filter holders in the sample flow line (filter holders may be preassembled).

(21) Follow the manufacturer's choke and throttle instruction for hot starting. Simultaneously start the engine and begin exhaust and dilution air sampling. For diesel engines, turn on the hydrocarbon and NO_X (and CO and CO_2. if continuous) analyzer system integrator (if used), indicate the start of the test on the data collection medium, and turn on the particulate sample pump(s).

(22) As soon as it is determined that the engine is started, start a ''free idle'' timer.

(23) Allow the engine to idle freely with no-load for 24±1 seconds. The provisions and interpretations of paragraph (a)(9) of this section apply.

(24) Begin the transient-engine cycle such that the first non-idle record of the cycle occurs at 25±1 seconds. The free idle is included in the 25±1 seconds.

(25) On the last record of the cycle, allow sampling system response times to elapse and cease sampling. Turn off the particulate sample pump(s) (if appropriate), the gas flow measuring device(s) and any continuous analyzer system integrator and indicate the end of the test on the data collection medium.

(26) As soon as possible, transfer the ''hot start cycle'' exhaust and dilution air bag samples to the analytical system and process the samples according to §86.1340. A stabilized reading of the exhaust sample on all analyzers shall be obtained within 20 minutes of the end of the sample collection phase of the test. Analyze the methanol and formaldehyde samples within 24 hours. (If it is not possible to perform analysis within 24 hours, the samples should be stored in a cold (approximately 0 °C) dark environment until analysis can be performed). For petroleum-fueled and methanol-fueled diesel engines, carefully remove the assembled filter holder from the sample flow lines and remove each particulate sample filter from its holder and invert the secondary filter and place it stain side to stain side on top of the primary filter. Place the filter pairs in a clean petri dish and cover as soon as possible. Within 1 hour after the end of the hot start phase of the test, transfer the particulate filters to the weighing chamber for post-test conditioning.

(27) The CVS and the engine may be turned off, if desired.

(b) The procedure in paragraph (a) of this section is designed for one sample bag for the cold start portion and one for the hot start portion. It is also permissible to use more than one sample bag per test portion.

(c) If a dynamometer test run is determined to be void, corrective action may be taken. The engine may then be allowed to cool (naturally or forced) and the dynamometer test rerun per paragraph (a) or (b) of this section.

[58 FR 16065, Mar. 24, 1993, as amended at 59 FR 48533, Sept. 21, 1994; 60 FR 34375, June 30, 1995; 62 FR 47133, Sept. 5, 1997]

§86.1337–2007 Engine dynamometer test run.

(a) The following steps shall be taken for each test:

(1) Prepare for the cold-start test.

(i) For gasoline- and methanol-fueled engines only, evaporative emission canisters shall be prepared for use in this testing in accordance with the procedures specified in §86.1232–96 (h) or (j). The size of the canisters used for testing shall correspond with the largest canister capacity expected in the range of vehicle applications for each engine. (The Administrator may, at his/her discretion, use a smaller canister capacity.) Attach the evaporative emission canister(s) to the engine, using the canister purge plumbing and controls employed in vehicle applications of the engine being tested. Plug

the canister port that is normally connected to the fuel tank.

(ii) Prepare the engine, dynamometer, and sampling system.

(iii) Change filters, etc., and leak check as necessary.

(2) Connect evacuated sample collection bags to the dilute exhaust and dilution air sample collection systems if bag sampling is used.

(3) For methanol-fueled vehicles, install fresh methanol and formaldehyde impingers (or cartridges) in the exhaust and dilution air sample systems for methanol and formaldehyde. A single dilution air sample covering the total test period may be utilized for methanol and formaldehyde background. (Background measurements of methanol and formaldehyde may be omitted and concentrations assumed to be zero for calculations in § 86.1344.)

(4) Attach the CVS to the engine exhaust system any time prior to starting the CVS.

(5) Start the CVS (if not already on), the sample pumps (except for the particulate sample pump(s), if applicable), the engine cooling fan(s), and the data collection system. The heat exchanger of the constant volume sampler (if used), and the heated components of any continuous sampling system(s) (if applicable) shall be preheated to their designated operating temperatures before the test begins. (See § 86.1340(e) for continuous sampling procedures.)

(6) Adjust the sample flow rates to the desired flow rates and set the CVS gas flow measuring devices to zero. CFV-CVS sample flow rate is fixed by the venturi design.

(7) For engines tested for particulate emissions, carefully install a clean, loaded particulate sample filter cartridge into the filter holder assembly. It is recommended that this be done within the filter stabilization environment, with both ends of the filter holder assembly plugged during transport to the emissions test facility. Install the assembled filter holder into the sample flow line.

(8) Follow the manufacturer's instructions for cold starting. Simultaneously start the engine and begin exhaust and dilution air sampling. For petroleum-fueled diesel engines (and natural gas-fueled, liquified petroleum gas-fueled or methanol-fueled diesels, if used) Turn on the hydrocarbon and NO_X (and CO and CO_2. if continuous) analyzer system integrators (if used), and turn on the particulate sample pumps and indicate the start of the test on the data collection medium.

(9) Allow the engine to idle freely with no-load for 24±1 seconds. This idle period for automatic transmission engines may be interpreted as an idle speed in neutral or park. All other idle conditions shall be interpreted as an idle speed in gear. It is permissible to lug the engine down to curb idle speed during the last 8 seconds of the free idle period for the purpose of engaging dynamometer control loops.

(10) Begin the transient engine cycles such that the first non-idle record of the cycle occurs at 25±1 seconds. The free idle time is included in the 25±1 seconds.

(i) During particulate sampling it must be demonstrated that the ratio of main tunnel flow to particulate sample flow does not change by more than ±5.0 percent of its set point value (except for the first 10 seconds of sampling). For double dilution operation, sample flow is the net difference between the flow rate through the sample filters and the secondary dilution air flow rate.

(ii) Record flow. If the set flow rate cannot be maintained because of high particulate loading on the filter, the test shall be terminated. The test shall be rerun using a lower sample flow rate or greater dilution.

(11) Begin the transient engine cycles such that the first non-idle record of the cycle occurs at 25±1 seconds. The free idle time is included in the 25±1 seconds.

(12) On the last record of the cycle, cease sampling. Immediately turn the engine off and start a hot-soak timer. Also turn off the particulate sample pumps, the gas flow measuring device(s) and any continuous analyzer system integrator and indicate the end of the test on the data collection medium. Sampling systems should continue to sample after the end of the test cycle until system response times have elapsed.

(13) Immediately after the engine is turned off, turn off the engine cooling

fan(s) if used. As soon as possible, transfer the ''cold start cycle'' exhaust and dilution air bag samples to the analytical system and process the samples according to §86.1340. A stabilized reading of the exhaust sample on all analyzers shall be obtained within 20 minutes of the end of the sample collection phase of the test. Analysis of the methanol and formaldehyde samples shall be obtained within 24 hours of the end of the sample collection period. For particulate measurements, carefully remove the filter holder from the sample flow apparatus

(14) Allow the engine to soak for 20±1 minutes.

(15) Prepare the engine and dynamometer for the hot start test.

(16) Connect evacuated sample collection bags to the dilute exhaust and dilution air sample collection systems.

(17) Install fresh methanol and formaldehyde impingers (or capsules) in the exhaust and dilution air sample systems for methanol and formaldehyde.

(18) Start the sample pumps (except the particulate sample pump(s), if applicable), the engine cooling fan(s) and the data collection system. The heat exchanger of the constant volume sampler (if used) and the heated components of any continuous sampling system(s) (if applicable) shall be preheated to their designated operating temperatures before the test begins. See §86.1340(e) for continuous sampling procedures.

(19) Adjust the sample flow rates to the desired flow rate and set the CVS gas flow measuring devices to zero.

(20) For diesel engines tested for particulate, carefully install a clean, loaded particulate sample filter cartridge in the filter holder assembly and install the filter holder assembly in the sample flow line.

(21) Follow the manufacturer's choke and throttle instruction for hot starting. Simultaneously start the engine and begin exhaust and dilution air sampling. For diesel engines, turn on the hydrocarbon and NO_X (and CO and CO2, if continuous) analyzer system integrator (if used), indicate the start of the test on the data collection medium, and turn on the particulate sample pump(s).

(22) [Reserved]

(23) Allow the engine to idle freely with no-load for 24±1 seconds. The provisions and interpretations of paragraph (a)(9) of this section apply.

(24) Begin the transient-engine cycle such that the first non-idle record of the cycle occurs at 25±1 seconds. The free idle is included in the 25±1 seconds.

(25) On the last record of the cycle, allow sampling system response times to elapse and cease sampling. Turn off the particulate sample pump(s) (if appropriate), the gas flow measuring device(s) and any continuous analyzer system integrator and indicate the end of the test on the data collection medium.

(26) As soon as possible, transfer the ''hot start cycle'' exhaust and dilution air bag samples to the analytical system and process the samples according to §86.1340. A stabilized reading of the exhaust sample on all analyzers shall be obtained within 20 minutes of the end of the sample collection phase of the test. Analyze the methanol and formaldehyde samples within 24 hours. (If it is not possible to perform analysis within 24 hours, the samples should be stored in a cold (approximately 0 deg.C) dark environment until analysis can be performed). For particulate measurements, carefully remove the filter holder assembly. It is recommended that the filter cartridge be transferred to and from the filter stabilization environment within the filter holder assembly with both ends plugged, and that the cartridge be removed from the filter holder assembly within the stabilization environment. Transfer the particulate filter to the stabilization environment for post-test stabilization. Filters may be stabilized in the petri dishes while still within the filter cartridges, or the cartridge tops may be removed for stabilization, or the filters may be entirely removed from the filter cartridges and stabilized in the petri dishes alone. Removal of the filters from the filter cartridges shall only take place within the stabilization environment.

(27) The CVS and the engine may be turned off, if desired.

(b) The procedure in paragraph (a) of this section is designed for one sample bag for the cold start portion and one for the hot start portion.

(c) If a dynamometer test run is determined to be void, corrective action may be taken. The engine may then be allowed to cool (naturally or forced) and the dynamometer test rerun.

[66 FR 5186, Jan. 18, 2001]

§ 86.1338–84 Emission measurement accuracy.

(a) *Measurement accuracy—Bag sampling.* (1) Good engineering practice dictates that exhaust emission sample analyzer readings below 15 percent of full scale chart deflection should generally not be used.

(2) Some high resolution read-out systems such as computers, data loggers, etc., can provide sufficient accuracy and resolution below 15 percent of full scale. Such systems may be used provided that additional calibrations of at least 4 non-zero nominally equally spaced points, using good engineering judgement, below 15 percent of full scale are made to ensure the accuracy of the calibration curves.

(3) The following procedure shall be followed:

(i) Span the analyzer using a calibration gas that meets the accuracy requirements of § 86.1314–84(f)(2), is within the operating range of the analyzer and at least 90% of full scale.

(ii) Generate calibration data over the full concentration range at a minimum of 6, approximately equally spaced, points (e.g. 15, 30, 45, 60, 75 and 90 percent of the range of concentrations provided by the gas divider). If a gas divider or blender is being used to calibrate the analyzer and the requirements of paragraph (a)(2) of this section are met, verify that a second calibration gas with a concentration between 10 and 20 percent of full scale can be named within 2 percent of its certified concentration. If more calibration points are needed to meet the requirements of paragraph (a)(2) of this section, continue with paragraph (a)(3)(iii) of this section.

(iii) If a gas divider or blender is being used to calibrate the analyzer, input the value of a second calibration gas (a span gas may be used for calibrating a CO_2 analyzer) having a named concentration between 10 and 20 percent of full scale. This gas shall be included on the calibration curve. Continue adding calibration points by dividing this gas until the requirements of paragraph (a)(2) of this section are met.

(iv) Fit a calibration curve per §§ 86.1321 through 86.1324 for the full scale range of the analyzer using the calibration data obtained with both calibration gases.

(b) *Measurement accuracy—Continuous sampling.* (1) Analyzers used for continuous analysis must be operated such that the measured concentration falls between 15 and 100 percent of full scale chart deflection. Exceptions to these limits are:

(i) Analyzer response less than 15 percent or more than 100 percent of full scale may be used if automatic range change circuitry is used and the limits for range changes are between 15 and 100 percent of full scale chart deflection;

(ii) Analyzer response less than 15 percent of full scale may be used if one of the following is true:

(A) Alternative (a)(2) of this section is used to ensure that the accuracy of the calibration curve is maintained below 15 percent; or

(B) The full scale value of the range is 155 ppm (C) or less.

(iii) Analyzer response over 100% of full scale may be used if it can be shown that readings in this range are accurate.

(iv) The HC and CO readings are allowed to ''spike'' above full scale of the analyzer's maximum operating range for a maximum accumulation of 5 seconds. These analyzer readings shall default to the maximum readable value during this time.

(c) If a gas divider is used, the gas divider shall conform to the accuracy requirements specified in § 86.1314–84(g), and shall be used according to the procedures contained in (a) and (b) of this section.

[62 FR 47133, Sept. 5, 1997]

§ 86.1338–2007 Emission measurement accuracy.

(a) *Minimum limit.* (1) The minimum limit of an analyzer must be equal to

or less than one-half of the average diluted concentration for an engine emitting the maximum amount of the applicable pollutant allowed by the applicable standard. For example, if with a given dilution and sampling system, an engine emitting NO_X at the level of the standard (*e.g.*, 0.20 g/bhp-hr NO_X) would result in an average NO_X concentration of 1.0 ppm in the diluted sample, then the minimum limit for the NO_X analyzer must be less than or equal to 0.5 ppm.

(2) For the purpose of this section, ''minimum limit'' means the lowest of the following levels:

(i) The lowest NO_X concentration in the calibration curve for which an accuracy of ±2 percent of point has been demonstrated as specified in paragraph (a)(3) of this section; or

(ii) Any NO_X concentration for which the test facility has demonstrated sufficient accuracy to the Administrator's satisfaction prior to the start of testing, such that it will allow a meaningful determination of compliance with respect to the applicable standard.

(3) For determination of the analyzer's minimum limit, a NO_X concentration that is less than or equal to one-half of the average NO_X concentration determined in paragraph (a)(1) of this section shall be measured by the oxides of nitrogen analyzer following the analyzer's monthly periodic calibration. This measurement must be made to ensure the accuracy of the calibration curve to within ±2 percent of point accuracy of the appropriate least-squares fit, at less than or equal to one half of the average expected diluted NO_X concentration determined in paragraph (a)(1) of this section.

(b) *Measurement accuracy—Bag sampling*. Analyzers used for bag analysis must be operated such that the measured concentration falls between 15 and 100 percent of full scale, with the following exception: concentrations below 15 percent of full scale may be used if the minimum limit of the analyzer within the range meets the requirement of paragraph (a) of this section.

(c) *Measurement accuracy—Continuous measurement*. (1) Analyzers used for continuous analysis must be operated such that the measured concentration falls between 15 and 100 percent of full scale, with the following exceptions:

(i) Concentrations below 15 percent of full scale may be used if the minimum limit of the analyzer within the range meets the requirement of paragraph (a) of this section.

(ii) Analyzer response over 100% of full scale may be used if it can be shown that readings in this range are accurate.

(2) If the analyzer response exceeds the level allowed by paragraph (c)(1)(ii) of this section, the test must be repeated using a higher range and both results must be reported. The Administrator may waive this requirement.

(d) If a gas divider is used, the gas divider shall conform to the accuracy requirements specified in § 86.1314–84(g), and shall be used according to the procedures contained in paragraphs (a) and (b) of this section.

[66 FR 5187, Jan. 18, 2001]

§ 86.1339–90 Particulate filter handling and weighing.

(a) At least 1 hour before the test, place a filter pair in a closed (to eliminate dust contamination) but unsealed (to permit humidity exchange) petri dish and place in a weighing chamber meeting the specifications of § 86.1312 for stabilization.

(b) At the end of the stabilization period, weigh each filter pair on a balance having a precision of 20 micrograms and a readability of 10 micrograms. This reading is the tare weight of the filter pair and must be recorded (see § 86.1344(e)(18)).

(c) The filter pair shall then be stored in a covered petri dish or a sealed filter holder, either of which shall remain in the weighing chamber until needed for testing.

(d) If the filter pair is not used within 1 hour of its removal from the weighing chamber, it must be re-weighed before use. This limit of 1 hour may be replaced by an 8-hour limit if either of the following three conditions are met:

(1) A stabilized filter pair is placed and kept in a sealed filter holder assembly with the ends plugged; or

(2) A stabilized filter pair is placed in a sealed filter holder assembly, which is then immediately placed in a sample line through which there is no flow; or

(3) A combination of the conditions specified in paragraphs (d) (1) and (2) of this section.

(e) After the emissions test, remove the filters from the filter holder and place them face to face in a covered but unsealed petri dish. They must then be conditioned in the weighing chamber for at least one hour. The filters are then weighed as a pair. This reading is the gross weight of the filters (Pf) and must be recorded (see § 86.1344–90(e)(19)).

(f) The net particulate weight (Pf) on each filter pair is the gross weight minus the tare weight. Should the sample on the filters (exhaust or background) contact the petri dish or any other surface, the test is void and must be rerun.

(g) Static neutralizers shall be used on petri dishes in accordance with good engineering judgement.

(h)This section does not apply for tests conducted according to the provisions of § 86.1312–2007.

[62 FR 47134, Sept. 5, 1997, as amended at 66 FR 5187, Jan. 18, 2001]

§ 86.1340–90 Exhaust sample analysis.

(a) The analyzer response may be read by automatic data collection (ADC) equipment such as computers, data loggers, etc. If ADC equipment is used the following is required:

(1) For bag analysis, the analyzer response must be stable at greater than 99 percent of the final reading for the dilute exhaust sample bag. A single value representing the average chart deflection over a 10-second stabilized period shall be stored. For the background bag, all readings taken during the 10-second interval must be stable at the final value to within ±1 percent of full scale.

(2) For continuous analysis systems, the ADC system must read at least two analyzer readings per second. A single value representing the average integrated concentration over a cycle shall be stored.

(3) The chart deflections or average integrated concentrations required in paragraphs (a) (1) and (2) of this section may be stored on long-term computer storage devices such as computer tapes, storage discs, punch cards, or they may be printed in a listing for storage. In either case a chart recorder is not required and records from a chart recorder, if they exist, need not be stored.

(4) If the data from ADC equipment is used as permanent records, the ADC equipment and the analyzer values as interpreted by the ADC equipment are subject to the calibration specifications in §§ 86.1316 through 86.1326, as if the ADC equipment were part of the analyzer.

(b) Data records from any one or a combination of analyzers may be stored as chart recorder records.

(c) *Software zero and span.* (1) The use of ''software'' zero and span is permitted. The process of software zero and span refers to the technique of initially adjusting the analyzer zero and span responses to the calibration curve values, but for subsequent zero and span checks the analyzer response is simply recorded without adjusting the analyzer gain. The observed analyzer response recorded from the subsequent check is mathematically corrected back to the calibration curve values for zero and span. The same mathematical correction is then applied to the analyzer's response to a sample of exhaust gas in order to compute the true sample concentration.

(2) The maximum amount of software zero and span mathematical correction is ±10 percent of full scale chart deflection.

(3) Software zero and span may be used to switch between ranges without adjusting the gain of the analyzer.

(4) The software zero and span technique may not be used to mask analyzer drift. The observed chart deflection before and after a given time period or event shall be used for computing the drift. Software zero and span may be used after the drift has been computed to mathematically adjust any span drift so that the ''after'' span check may be transformed into the ''before'' span check for the next segment.

(d) For bag sample analysis perform the following sequence:

(1) Warm-up and stabilize the analyzers; clean and/or replace filter elements, conditioning columns (if used), etc., as necessary.

(2) Obtain a stable zero reading.

(3) Zero and span the analyzers with zero and span gases. The span gases shall have concentrations between 75 and 100 percent of full-scale chart deflection. The flow rates and system pressures during spanning shall be approximately the same as those encountered during sampling. A sample bag may be used to identify the required analyzer range.

(4) Re-check zero response. If this zero response differs from the zero response recorded in paragraph (d)(3) of this section by more than 1 percent of full scale, then paragraphs (d) (2), (3), and (4) of this section should be repeated.

(5) If a chart recorder is used, identify and record the most recent zero and span response as the pre-analysis values.

(6) If ADC equipment is used, electronically record the most recent zero and span response as the pre-analysis values.

(7) Measure HC (except diesels), CO, CO_2. and NO_X sample and background concentrations in the sample bag(s) with approximately the same flow rates and pressures used in paragraph (d)(3) of this section. (Constituents measured continuously do not require bag analysis.)

(8) A post-analysis zero and span check of each range must be performed and the values recorded. The number of events that may occur between the pre and post checks is not specified. However, the difference between pre-analysis zero and span values (recorded in paragraph (d) (5) or (6) of this section) versus those recorded for the post-analysis check may not exceed the zero drift limit or the span drift limit of 2 percent of full scale chart deflection for any range used. Otherwise the test is void.

(e) For continuous sample analysis perform the following sequence:

(1) Warm-up and stabilize the analyzers; clean and/or replace filter elements, conditioning columns (if used), etc., as necessary.

(2) Leak check portions of the sampling system that operate at negative gauge pressures when sampling, and allow heated sample lines, filters, pumps, etc., to stabilize at operating temperature.

(3) *Optional:* Perform a hang-up check for the HFID sampling system:

(i) Zero the analyzer using zero air introduced at the analyzer port.

(ii) Flow zero air through the overflow sampling system. Check the analyzer response.

(iii) If the overflow zero response exceeds the analyzer zero response by 2 percent or more of the HFID full-scale deflection, hang-up is indicated and corrective action must be taken.

(iv) The complete system hang-up check specified in paragraph (f) of this section is recommended as a periodic check.

(4) Obtain a stable zero reading.

(5) Zero and span each range to be used on each analyzer used prior to the beginning of the cold cycle. The span gases shall have a concentration between 75 and 100 percent of full scale chart deflection. The flow rates and system pressures shall be approximately the same as those encountered during sampling. The HFID analyzer shall be zeroed and spanned through the overflow sampling system.

(6) Re-check zero response. If this zero response differs from the zero response recorded in paragraph (e)(5) of this section by more than 1 percent of full scale, then paragraphs (e) (4), (5), and (6) of this section should be repeated.

(7) If a chart recorder is used, identify and record the most recent zero and span response as the pre-analysis values.

(8) If ADC equipment is used, electronically record the most recent zero and span response as the pre-analysis values.

(9) Measure the emissions (HC required for diesels; NO_X, CO, CO_2 optional) continuously during the cold start cycle. Indicate the start of the test, the range(s) used, and the end of the test on the recording medium (chart paper or ADC equipment). Maintain approximately the same flow rates and system pressures used in paragraph (e)(5) of this section.

(10) Collect background HC, CO, CO_2. and NO_X in a sample bag.

(11) Perform a post-analysis zero and span check for each range used at the conditions specified in paragraph (e)(5)

of this section. Record these responses as the post-analysis values.

(12) Neither the zero drift nor the span drift between the pre-analysis and post-analysis checks on any range used may exceed 3 percent for HC, or 2 percent for NO_X, CO, and CO_2. of full scale chart deflection, or the test is void. (If the HC drift is greater than 3 percent of full-scale chart deflection, hydrocarbon hang-up is likely.)

(13) Determine HC background levels for the cold start cycle by introducing the background sample into the overflow sample system.

(14) Determine background levels of NO_X, CO, or CO_2 (if necessary) by the bag technique outlined in paragraph (d) of this section.

(15) Repeat paragraphs (e) (4) through (14) of this section for the hot cycle. The post-analysis zero and span check for the cold start (or previous hot start) cycle may be used for the pre-analysis zero and span for the following hot start cycle.

(f) *HC hang-up.* If HC hang-up is indicated, the following sequence may be performed:

(1) Fill a clean sample bag with background air.

(2) Zero and span the HFID at the analyzer ports.

(3) Analyze the background air sample bag through the analyzer ports.

(4) Analyze the background air through the entire sample probe system.

(5) If the difference between the readings obtained is 2 percent or more of the HFID full scale deflection, clean the sample probe and the sample line.

(6) Reassemble the sample system, heat to specified temperature, and repeat the procedure in paragraphs (f) (1) through (6) of this section.

(g) For CH_3OH (where applicable), introduce test samples into the gas chromatograph and measure the concentration. This concentration is C_{MS} in the calculations.

(h) For HCHO (where applicable), introduce test samples into the high pressure liquid chromatograph and measure the concentration of formaldehyde as a dinitrophenylhydrazine derivative in acetonitrile. This concentration is C_{FS} in the calculations.

[54 FR 14602, Apr. 11, 1989, as amended at 60 FR 34375, June 30, 1995]

§ 86.1340–94 Exhaust sample analysis.

Section 86.1340–94 includes text that specifies requirements that differ from § 86.1340–90. Where a paragraph in § 86.1340–90 is identical and applicable to § 86.1340–94, this may be indicated by specifying the corresponding paragraph and the statement ''[Reserved]. For guidance see § 86.1340–90.''

(a) through (d)(6) [Reserved]. For guidance see § 86.1340–90.

(d)(7) Measure HC (except diesels), CH_4 (natural gas-fueled engines only), CO, CO_2. and NO_X sample bag(s) with approximately the same flow rates and pressures used in § 86.1340–90(d)(3). (Constituents measured continuously do not require bag analysis.)

(d)(8) through (h) [Reserved]. For guidance see § 86.1340–90.

[59 FR 48534, Sept. 21, 1994, as amended at 60 FR 34375, June 30, 1995]

§ 86.1341–90 Test cycle validation criteria.

(a) To minimize the biasing effect of the time lag between the feedback and reference cycle values, the entire engine speed and torque feedback signal sequence may be advanced or delayed in time with respect to the reference speed and torque sequence. If the feedback signals are shifted, both speed and torque must be shifted the same amount in the same direction.

(b) *Brake horsepower-hour calculation.* (1) Calculate the brake horsepower-hour for each pair of engine feedback speed and torque values recorded. Also calculate the reference brake horsepower-hour for each pair of engine speed and torque reference values. Calculations shall be to five significant digits.

(2) In integrating the reference and the feedback horsepower-hour, all negative torque values shall be set equal to zero and included. If integration is performed at a frequency of less than 5 Hz, and if during a given time segment, the torque value changes from positive to negative or negative to positive,

then the negative portion must be computed by linear interpolation and set equal to zero and the positive portion included. The same methodology shall be used for integrating both reference and actual brake horsepower-hour.

(c) *Regression line analysis to calculate validation statistics.* (1) Linear regressions of feedback value on reference value shall be performed for speed, torque and brake horsepower on 1 Hz data after the feedback shift has occurred (see paragraph (a) of this section). The method of least squares shall be used, with the best fit equation having the form:

$$y=mx+b$$

Where:

y = The feedback (actual) value of speed (rpm), torque (ft-lbs), or brake horsepower.

m = Slope of the regression line.

x = The reference value (speed, torque, or brake horsepower).

b = The y-intercept of the regression line.

(2) The standard error of estimate (SE) of y on x and the coefficient of determination (r^2) shall be calculated for each regression line.

(3) For a test to be considered valid, the criteria in Figure N90–11 must be met for both cold and hot cycles individually. Point deletions from the regression analyses are permitted where noted in Figure N90–11.

FIGURE N90–11

	Speed	Torque	BHP
Regression Line Tolerances			
Petroleum-fueled and methanol-fueled diesel engines			
Standard error of estimate (SE) of Y on X	100 rpm	13 pct. of power map maximum engine torque	8 pct. of power map maximum BHP.
Slope of the regression line, m	0.970 to 1.030	0.83–1.03 (hot), 0.77–1.03 (cold)	0.89–1.03 (hot), 0.87–1.03 (cold).
Coefficient of determination, r^2	[1] 0.9700	[1] 0.8800 (hot), [1] 0.8500 (cold)	[1] 0.9100.
Y intercept of the regression line, b	50 rpm	15 ft-lb	5.0
Gasoline-fueled and methanol-fueled Otto-cycle engines			
Standard error of estimate (SE) of Y on X	100 rpm	10% (hot), 11% (cold) of power map max. engine torque.	5% (hot), 6% (cold) of power map maximum BHP.
Slope of the regression line, m	0.980 to 1.020	0.92–1.03 (hot), 0.88–1.03 (cold)	0.93–1.03 (hot), 0.89–1.03 (cold).
Coefficient of determination, r^2	[1] 0.9700	[1] 0.9300 (hot), [1] 0.9000 (cold)	[1] 0.9400 (hot), [1] 0.9300 (cold).
Y intercept of the regression line, b	25 (hot), 40 (cold)	4%(hot), 5 (cold) of power map max. engine torque.	2.0% (hot), 2.5% (cold) of power map BHP.

[1] Minimum.

PERMITTED POINT DELETIONS FROM REGRESSION ANALYSIS

Condition	Points to be deleted
1. Wide Open Throttle and Torque Feedback < Torque Reference	Torque, and/or BHP.
2. Closed Throttle, Not an Idle Point, Torque Feedback >Torque Reference	Torque, and/or BHP.
3. Closed Throttle, Idle Point, and Torque Feedback = CITT (10 ft-lb)	Speed, and/or BHP.

For the purposes of this discussion:

An Idle Point is defined as a point having a Normalized Reference Torque of 0 and a Normalized Reference Speed of 0 and an engine tested as having a manual transmission has a CITT of 0. Point deletion may be applied either to the whole or to any part of the cycle. EXPSTB='00'

(4)(i) For petroleum-fueled and methanol-fueled diesel engines, the integrated brake horsepower-hour for each cycle (cold and hot start) shall be between −15 percent and +5 percent of the integrated brake horsepower-hour for the reference cycle, or the test is void.

(ii) For gasoline-fueled and methanol-fueled Otto-cycle engines, the integrated brake horsepower-hour of the feedback cycle shall be within 5 percent of the integrated brake horsepower-hour of the reference cycle for the cold cycle, or the test is void. The tolerance for the hot cycle shall be 4 percent.

(5) If a dynamometer test run is determined to be statistically or experimentally void, corrective action shall be taken. The engine shall then be allowed to cool (naturally or forced) and the dynamometer test rerun per § 86.1337 or be restarted at § 86.1336–84(e).

(d) For petroleum-fueled and methanol-fueled diesel engines, all reference torque values specified (in paragraph (f)(2) of appendix I to this part) as ''closed throttle'' shall be deleted from the calculation of cycle torque and power validation statistics.

[54 FR 14604, Apr. 11, 1989, as amended at 62 FR 47134, Sept. 5, 1997]

§ 86.1341–98 Test cycle validation criteria.

Section 86.1341–98 includes text that specifies requirements that differ from § 86.1341–90. Where a paragraph in § 86.1341–90 is identical and applicable to § 86.1341–98, this may be indicated by specifying the corresponding paragraph and the statement ''[Reserved]. For guidance see § 86.1341–90''

(a) Through (b)(2) [Reserved]. For guidance see § 86.1341–90.

(b)(3) All feedback torques due to accessory loads, either actual or simulated as defined in § 86.1327–90 (d)(4), shall be excluded from both cycle validation and the integrated work used for emissions calculations.

(4) For reference idle portions of the cycle where CITT is not applied, use measured torque values for cycle validation and the reference torque values for calculating the brake horsepower-hour value used in the emission calculations. For reference idle portions of the cycle where CITT is applied, use measured torque values for cycle validation and calculating the brake horsepower-hour value used in the emission calculations.

(c) Through (d) [Reserved]. For guidance see § 86.1341–90.

[62 FR 47135, Sept. 5, 1997]

§ 86.1342–90 Calculations; exhaust emissions.

(a) The final reported transient emission test results should be computed by using the following formula:

$$A_{WM} = \frac{(1/7)(g_C) + (6/7)(g_H)}{(1/7)(BHP - hr_C) + (6/7)(BHP - hr_H)}$$

Where:

(1) A_{WM} = Weighted mass emission level (HC, CO, CO_2. or NO_X) in grams per brake horsepower-hour and, if appropriate, the weighted mass total hydrocarbon equivalent, in grams per brake horsepower-hour.

(2) g_C = Mass emission level in grams or grams carbon mass equivalent, measured during the cold start test.

(3) g_H = Mass emission level in grams or grams carbon mass equivalent, measured during the hot start test.

(4) BHP − hr_C = Total brake horsepower-hour (brake horsepower integrated over time) for the cold start test.

(5) BHP-hr_H = Total brake horsepower-hour (brake horsepower integrated over time) for the hot start test.

(b) The mass of each pollutant for the cold start test and the hot start test for bag measurements and diesel continuously heated sampling system measurements is determined from the following equations:

(1) Hydrocarbon mass:

$HC_{mass} = V_{mix} \times Density_{HC} \times (HC_{conc}/10^6)$

(2) Oxides of nitrogen mass:

$NOx_{mass} = V_{mix} \times Density_{NO2} \times K_H \times (NOx_{conc}/10^6)$

(3) Carbon monoxide mass:

$CO_{mass} = V_{mix} \times Density_{CO} \times (CO_{conc}/10^6)$

(4) Carbon dioxide mass:

$CO_{2mass} = V_{mix} \times Density\ CO_2 \times (CO_{2conc}/10^2)$

(5) Methanol mass:

$CH3OH_{mass} = V_{mix} \times Density_{CH3OH} \times (CH3OH_{conc}/10^6)$

(6) Formaldehyde mass:

$HCHO_{mass} = V_{mix} \times Density_{HCHO} \times (HCHO_{conc}/10^6)$

(7) Total hydrocarbon equivalent mass:

(i)

$$THCE = HC_{mass} + \frac{13.8756}{32.042}\left(CH_3OH_{mass}\right) + \frac{13.8756}{30.0262}\left(HCHO_{mass}\right)$$

(c) The mass of each pollutant for the cold start test and the hot start test for flow compensated sample systems is determined from the following equations:

$$(1)\quad HC_{mass} = \sum_{i=1}^{n}\left[\frac{(HC_e)_i}{10^6}\times(V_{mix})_i\times(Density_{HC})\times\Delta T\right] - \frac{HC_d}{10^6}\left(1-\frac{1}{DF}\right)\times V_{mix}\times Density_{HC}$$

$$(2)\quad NOx_{mass} = K_H\times\sum_{i=1}^{n}\left[\frac{(NOx_e)_i}{10^6}\times(V_{mix})_i\times(Density_{NO_2})\times\Delta T\right] - K_H\times\frac{NOx_d}{10^6}\left(1-\frac{1}{DF}\right)\times V_{mix}\times Density_{NO_2}$$

$$(3)\quad CO_{mass} = \sum_{i=1}^{n}\left[\frac{(CO_e)_i}{10^6}\times(V_{mix})_i\times(Density_{CO})\times\Delta T\right] - \frac{CO_d}{10^6}\left(1-\frac{1}{DF}\right)\times V_{mix}\times Density_{CO}$$

$$(4)\quad CO2_{mass} = \sum_{i=1}^{n}\left[\frac{(CO_{2e})_i}{10^6}\times(V_{mix})_i\times(Density_{CO_2})\times\Delta T\right] - \frac{CO_{2d}}{10^6}\left(1-\frac{1}{DF}\right)\times V_{mix}\times Density_{CO_2}$$

(d) Meaning of symbols:

(1)(i) HC_{mass} = Hydrocarbon emissions, in grams per test phase.

(ii) $Density_{HC}$ = Density of hydrocarbons = 16.33 g/ft³ (0.5768 kg/m³) for gasoline and the gasoline fraction of methanol-fuel, and may be used for petroleum and the petroleum fraction of methanol diesel fuel if desired, 16.42 g/ft³ (0.5800 kg/m³) for #1 petroleum diesel fuel and 16.27 g/ft³ (0.5746 kg/m³) for #2 diesel, assuming an average carbon to hydrogen ratio of 1:1.85 for gasoline, 1:1.93 for #1 petroleum diesel fuel and 1:1.80 for #2 petroleum diesel fuel at 68 °F (20 °C) and 760 mm Hg (101.3 kPa) pressure.

(iii)(A) HC_{conc} = Hydrocarbon concentration of the dilute exhaust sample corrected for background, in ppm carbon equivalent (i.e., equivalent propane ×3).

(B) $HC_{conc} = HC_e - HC_d(1 - (1/DF))$

Where:

(iv)(A) HC_e = Hydrocarbon concentration of the dilute exhaust bag sample or, for diesel continuous heated sampling systems, average hydrocarbon concentration of the dilute exhaust

sample as determined from the integrated HC traces, in ppm carbon equivalent. For flow compensated systems $(HC_e)_i$ is the instantaneous concentration.

(B) For petroleum-fueled engines, HC_e is the FID measurement.

(C) For methanol-fueled engines:

HC_e = FID HC_e − (r)C_{CH3OHe}

(v) FID HC_e = Concentration of hydrocarbon plus methanol in dilute exhaust as measured by the FID, ppm carbon equivalent.

(vi) r = FID response to methanol.

(vii) C_{CH3OHe} = Concentration of methanol in dilute exhaust as determined from the dilute exhaust methanol sample, ppm carbon.

(viii)(A) HC_d = Hydrocarbon concentration of the dilution air as measured, in ppm carbon equivalent.

(B) HC_d = FID HC_d − (r)C_{CH3OHd}

(ix) FID HC_d = Concentration of hydrocarbon plus methanol in dilution air as measured by the FID, ppm carbon equivalent.

(x) C_{CH3OHd} = Concentration of methanol in dilution air as determined from dilution air methanol sample in ppm carbon.

(2)(i) NOx_{mass} = Oxides of nitrogen emissions, in grams per test phase.

(ii) $Density_{NO2}$ = Density of oxides of nitrogen is 54.16 g/ft^3 (1.913 kg/m^3), assuming they are in the form of nitrogen dioxide, at 68 °F (20 °C) and 760 mm Hg (101.3 kPa) pressure.

(iii)(A) NOx_{conc} = Oxides of nitrogen concentration of the dilute exhaust sample corrected for background, in ppm.

(B) NOx_{conc} = NOx_e − NOx_d [1 − (1/DF)]

Where:

(iv) NOx_e = Oxides of nitrogen concentration of the dilute exhaust bag sample as measured, in ppm. For flow compensated sample systems $(NOx_e)_i$ is the instantaneous concentration.

(v) NOx_d = Oxides of nitrogen concentration of the dilution air as measured, in ppm.

(3)(i) CO_{mass} = Carbon monoxide emissions, grams per test phase.

(ii) $Density_{CO}$ = Density of carbon monoxide is 32.97 g/ft^3 (1.164 kg/m^3), at 68 °F (20 °C) and 760 mm Hg (101.3 kPa) pressure.

(iii)(A) CO_{conc} = Carbon monoxide concentration of the dilute exhaust sample corrected for background, water vapor, and CO_2 extraction, ppm.

(B) CO_{conc} = CO_e − CO_d[1 − (1/DF)]

Where:

(iv) CO_e = Carbon monoxide concentration of the dilute exhaust bag sample volume corrected for water vapor and carbon dioxide extraction, in ppm. For flow compensated sample systems $(CO_e)_i$ is the instantaneous concentration.

(v)(A) CO_e = (1 − 0.01925CO_2. − 0.000323R)CO_{em} for gasoline and petroleum diesel fuel, with hydrogen to carbon ratio of 1.85:1.

(B) CO_e = [1 − (0.01 + 0.005HCR) CO_2. − 0.000323R] CO_{em} for methanol fuel, where HCR is hydrogen to carbon ratio as measured for the fuel used.

Where:

(vi) CO_{em} = Carbon monoxide concentration of the dilute exhaust sample as measured, in ppm.

(vii)(A) CO_2. = Carbon dioxide concentration of the dilute exhaust bag sample, in percent, if measured. For flow compensated sample systems, $(CO_2.)_i$ is the instantaneous concentration. For cases where exhaust sampling of CO_2 is not performed, the following approximation is permitted:

(B)

$$CO_{2e} = \frac{44.010}{12.011 + (1.008\alpha)} \times \frac{M'(453.6)}{\text{Density } CO_2} \times \frac{100}{V_{mix}}$$

Where:

(C) α = Average carbon to hydrogen ratio, as specified by the Administrator.

(D) M′ = Fuel mass consumed during the test cycle.

(E) R = Relative humidity of the dilution air, percent.

(viii)(A) CO_d = Carbon monoxide concentration of the dilution air corrected for water vapor extraction, in ppm.

(B) $CO_d = (1 - 0.000323R)CO_{dm}$.

Where:

(ix) CO_{dm} = Carbon monoxide concentration of the dilution air sample as measured, in ppm.

NOTE: If a CO instrument which meets the criteria specified in § 86.1311 is used and the conditioning column has been deleted, CO_{em} must be substituted directly for CO_e, and CO_{dm} must be substituted directly for CO_d.

(4)(i) CO_{2mass} = Carbon dioxide emissions, in grams per test phase.

(ii) Density CO_2 = Density of carbon dioxide is 51.81 g/ft³ (1.830 kg/m³), at 68 °F (20 °C) and 760 mm Hg (101.3 kPa) pressure.

(iii) CO_{2conc} = Carbon dioxide concentration of the dilute exhaust sample corrected for background, in percent.

(iv) $CO_{2mass} = CO_{2.} - CO_{2.}[1 - (1/DF)]$.

Where:

(v) $CO_{2.}$ = Carbon dioxide concentration of the dilution air as measured, in percent.

(5)(i) CH_3OH_{mass} = Methanol emissions corrected for background, in grams per test phase.

(ii) $Density_{CH3OH}$ = Density of methanol is 37.71 g/ft³ (1.332 kg/m³), at 68 °F (20 °C) and 760 mm Hg (101.3kPa) pressure.

(iii)(A) CH_3OH_{conc} = Methanol concentration of the dilute exhaust corrected for background, in ppm.

(B) $CH_3OH_{conc} = C_{CH3OHe} - C_{CH3OHd}\ [1 - (1/DF)]$.

Where:

(iv)(A) C_{CH3OHe} = Methanol concentration in the dilute exhaust, in ppm.

(B)

$$C_{CH3OHe}\ \frac{3.813\times10^{-2}\times C_{CH3OHR}\times T_{EM}\left[\left(A_{S1}\times AV_{S1}\right)+\left(A_{S2}\times AV_{S2}\right)\right]}{A_{CH3OHR}\times P_B\times V_{EM}}$$

(v)(A) C_{CH3OHd} = Methanol concentration in the dilution air, in ppm.

(B)

$$C_{CH3OHd}\ \frac{3.813\times10^{-2}\times C_{CH3OHR}\times T_{DM}\left[\left(A_{D1}\times AV_{D1}\right)+\left(A_{D2}\times AV_{D2}\right)\right]}{A_{CH3OHR}\times P_B\times V_{DM}}$$

(vi) C_{CH3OHR} = Concentration of methanol in standard sample for calibration of GC, µg/ml.

(vii) A_{CH3OHR} = GC peak area of standard sample.

(viii) T_{EM} = Temperature of methanol sample withdrawn from dilute exhaust, °R.

(ix) T_{DM} = Temperature of methanol sample withdrawn from dilution air, °R.

(x) P_B = Barometric pressure during test, mm Hg.

(xi) V_{EM} = Volume of methanol sample withdrawn from dilute exhaust, ft³.

(xii) V_{DM} = Volume of methanol sample withdrawn from dilution air, ft³.

(xiii) A_S = GC peak area of sample drawn from dilute exhaust.

(xiv) A_D = GC peak area of sample drawn from dilution air.

(xv) AV_S = Volume of absorbing reagent (deionized water) in impinger through which methanol sample from dilute exhaust is drawn, ml.

(xvi) AV_D = Volume of absorbing reagent (deionized water) in impinger through which methanol sample from dilution air is drawn, ml.

(xvii) 1 = first impinger.

(xviii) 2 = second impinger.

(6)(i) $HCHO_{mass}$ = Formaldehyde emissions corrected for background, grams per test phase.

(ii) $Density_{HCHO}$ = Density of formaldehyde is 35.36 g/ft³ (1.249 kg/m³), at 68 °F (20 °C) and 760 mmHg (101.3 kPa) pressure.

(iii)(A) $HCHO_{conc}$ = Formaldehyde concentration of the dilute exhaust corrected for background, ppm.

(B) $HCHO_{conc} = C_{HCHOe} - C_{HCHOd}\,[1 - (1/DF)]$.

Where:

(iv)(A) C_{HCHOe} = Formaldehyde concentration in dilute exhaust, ppm.

(B)

$$C_{HCHOe} = \frac{4.069 \times 10^{-2} \times C_{FDE} \times V_{AE} \times Q \times T_{EF}}{V_{SE} \times P_B}$$

(v)(A) C_{HCHOd} = Formaldehyde concentration in dilution air, ppm.

$$C_{HCHOd} = \frac{4.069 \times 10^{-2} \times C_{FDE} \times V_{AA} \times Q \times T_{DF}}{V_{SA} \times P_B}$$

(vi) C_{FDE} = Concentration of DNPH derivative of formaldehyde from dilute exhaust sample in sampling solution, μg/ml.

(vii) V_{AE} = Volume of sampling solution for dilute exhaust formaldehyde sample, ml.

(viii)(A) Q = Ratio of molecular weights of formaldehyde to its DNPH derivative.

(B) Q = 0.1429.

(ix) T_{EF} = Temperature of formaldehyde sample withdrawn from dilute exhaust, °R.

(x) V_{SE} = Volume of formaldehyde sample withdrawn from dilute exhaust, ft^3.

(xi) P_B = Barometric pressure during test, mm Hg.

(xii) C_{FDA} = Concentration of DNPH derivative of formaldehyde from dilution air sample in sampling solution, μg/ml.

(xiii) V_{AA} = Volume of sampling solution for dilution air formaldehyde sample, ml.

(xiv) T_{DF} = Temperature of formaldehyde sample withdrawn from dilution air, °R.

(xv) V_{SA}=Volume of formaldehyde sample withdrawn from dilution air, ft^3.

(7)(i) $DF=13.4/[CO_2.+(HC_e+CO_e)10^{-4}]$ for petroleum-fueled vehicles, or $DF=13.4/CO_2$.

$$\text{(ii) } DF = \frac{100 \times \left(\dfrac{x}{x + y/2 + 3.76(x + y/4 - z/2)} \right)}{CO_{2e} + \left(HC_e + CO_e + CH_3OH_e\right)10^{-4}}$$

for methanol-fueled vehicles, where fuel composition is $C_X\ H_y\ O_z$ as measured for the fuel used.

(8)(i) K_H = Humidity correction factor.

(ii) For gasoline-fueled and methanol-fueled diesel engines: $K_H = 1/[1 - 0.0047\ (H - 75)]$ (or for SI units, $K_H = 1/[1 - 0.0329(H - 10.71)]$).

(iii) For petroleum-fueled and methanol-fueled diesel engines: $K_H = 1/[1 - 0.0026\ (H - 75)]$ (or for SI units = $1/[1 - 0.0182\ (H - 10.71)]$).

Where:

(iv)(A) H = Absolute humidity of the engine intake air in grains (grams) of water per pound (kilogram) of dry air.

(B)(*1*) $H = [(43.478)R_i \times P_d]/[P_B - (P_d \times R_i/100)]$

(*2*) *For SI units,*

$H = [(6.211)R_i \times P_d]/[P_B - (P_d \times R_i/100)]$

(C) R_i = Relative humidity of the engine intake air, percent.

(D) P_d = Saturated vapor pressure, in mm Hg (kPa) at the engine intake air dry bulb temperature.

(E) P_B = Barometric pressure, in mm Hg (kPa).

(9)(i) V_{mix} = Total dilute exhaust volume in cubic feet per test phase corrected to standard conditions (528 °R) (293 °K) and 760 mm Hg (101.3 kPa).

(ii) $(V_{mix})_i$ = Instantaneous dilute exhaust volumetric flow rate (for compensated flow systems), ft^3/sec.

(iii) T = Time interval (seconds) between samples in flow compensated systems.

(iv) T = Total sampling time (seconds).

(v) *For PDP-CVS:*

(A)

$$V_{mix} = V_o \times \left(\frac{N(P_B - P_4)(528)}{(760)(T_p)} \right)$$

(B) *For SI units,*

$$V_{mix} = V_o \times \left(\frac{N(P_B - P_4)(293)}{(101.3)(T_p)} \right)$$

Where:

(vi) V_o = Volume of gas pumped by the positive displacement pump, in cubic feet (cubic meters) per revolution. This volume is dependent on the pressure differential across the positive displacement pump.

(vii) N = Number of revolutions of the positive displacement pump during the test phase while samples are being collected.

(viii) P_B = Barometric pressure, mm Hg (kPa).

(ix) P_4 = Pressure depression below atmospheric measured at the inlet to the positive displacement pump, in mm Hg (kPa) (during an idle mode).

(x) T_p = Average temperature of dilute exhaust entering positive displacement pump during test, °R (°K).

(e) Sample calculation of mass values of exhaust emissions:

(1) Assume the following test results for a gasoline engine:

	Cold start cycle test results	Hot start cycle test results
V_{mix}	6924 ft^3	6873 ft^3.
R	30.2 percent	30.2 percent.
R_i	30.2 percent	30.2 percent.
P_B	735 mm Hq	735 mm Hg.
P_d	22.676 mm Hq	22.676 mm Hq.
HC_e	132.07 ppm C equiv	86.13 ppm C equiv.
NO_{xe}	7.86 ppm	10.98 ppm.
CO_{em}	171.22 ppm	114.28 ppm.
CO_2.	0.178 percent	0.381 percent.
HC_d	3.60 ppm C equiv	8.70 ppm C equiv.
NO_d	0.0 ppm	0.10 ppm.
CO_{dm}	0.89 ppm	0.89 ppm.
$C0_2$.	0.0 percent	0.038 percent.
BHP-hr	0.259	0.347.

Then:

(2) *Cold Start Test:*

(i) H

$= [(43.478)(30.2)(22.676)]/[735 - (22.676)(30.2)/100]$

= 41 grains of water per pound of dry air.

(ii) $K_H = 1/[1 - 0.0047(41–75)] = 0.862$

(iii) CO_e

$= [1 - 0.01925(.178) - 0.000323(30.2)]171.22$

= 169.0 ppm

(iv) $CO_d = [1 - 0.000323(30.2)]\ 0.89 =$ 0.881 ppm

(v) DF

$= 13.4/[.178 + (132.07 + 169.0)(10^{-4})]$

= 64.390

(vi) HC_{conc}

$= 132.07 - 3.6[1 - (1/64.390)]$

= 128.5 ppm

(vii) HC_{mass}

$= 6924(16.33)(128.5/10^6)$

= 14.53 grams

(viii) NOx_{conc}

$= 7.86 - 0.0[1 - (1/64.390)]$

= 7.86 ppm

(ix) NOx_{mass}

$= 6924(54.16)(.862)(7.86/10^6)$

= 2.54 grams

(x) CO_{conc}

$= 169.0 - .881[1 - (1/64.390)]$

= 168.0 ppm

(xi) CO_{mass}

$= 6924(32.97)(168.0/10^6)$

= 38.35 grams

(xii) $CO_{2conc} = .178 - 0[1 - 1/64.390)] =$ 0.178%

(xiii) CO_{2mass}=6924(51.81)(.178/100)=639 grams

(3) *Hot start test:* Similar calculations result in the following:

(i) HC_{mass} = 8.72 grams

(ii) NOx_{mass} = 3.49 grams

(iii) CO_{mass} = 25.70 grams

(iv) CO_{2mass} = 1226 grams

(4) Weighted mass emission results:

(i) HC_{wm} = 1/7(14.53) + 6/7(8.72)/1/7(0.259) + 6/7(0.347) = 28.6 grams/BHP – hr

(ii) NO_{Xwm} = 1/7(2.54) + 6/7(3.49)/1/7(0.259) + 6/7(0.347) = 10.0 grams/BHP – hr

(iii) CO_{wm} = 1/7(38.35) + 6/7(25.70)/1/7(0.259) + 6/7(0.347) = 82.2 grams/BHP – hr

(iv) CO_{2wm} = 1/7(639) + 6/7(1226)/1/7(0.259) + 6/7(0.347) = 3415 grams/BHP – hr

(f) The final reported brake-specific fuel consumption (BSFC) shall be computed by use of the following formula:

$$BSFC = \frac{1/7(M_C) + 6/7(M_H)}{1/7(BHP\text{–}hr_C) + 6/7(BHP\text{–}hr_H)}$$

Where:

(1) BSFC = brake-specific fuel consumption in pounds of fuel per brake horsepower-hour (lbs/BHP-hr).

(2) M_C = mass of fuel, in lbs, used by the engine during the cold start test.

(3) M_H = mass of fuel, in lbs, used by the engine during the hot start test.

(4) BHP-hr_C = total brake horsepower-hours (brake horsepower integrated with respect to time) for the cold start test.

(5) BHP-hr_H = total brake horsepower-hours (brake horsepower integrated with respect to time) for the hot start test.

(g)(1) The mass of fuel for the cold start and hot start test is determined from mass fuel flow measurements made during the tests, or from the following equation:

$M = (G_s/R_2)(1/453.6)$

(2) Meaning of symbols:

(i) M = Mass of fuel, in lbs, used by the engine during the cold or hot start test.

(ii) G_s = Grams of carbon measured during the cold or hot start test:

$$G_s = \left[\frac{12.011}{12.011 + \alpha(1.008)}\right] HC_{mass} + 0.429CO_{mass} + 0.273CO_{2mass}$$

Where:

(iii) HC_{mass} = Hydrocarbon emissions, in grams, for cold or hot start test.

(iv) CO_{mass} = Carbon monoxide emissions, in grams, for cold or hot start test.

(v) CO_{2mass} = Carbon dioxide emissions, in grams, for cold or hot start test.

(vi) α = The atomic hydrogen to carbon ratio of the fuel.

(vii)(A) R_2 = The grams of carbon in the fuel per gram of fuel.

(B) R_2 = 12.011/[12.011 + α(1.008)]

(h) Sample calculation of brake-specific fuel consumption:

(1) Assume the following test results:

	Cold start cycle test results	Hot start cycle test results
BHP-hr	6.945	7.078
α	1.85	1.85
HC_{mass} (grams)	37.08	28.82
CO_{mass} (grams)	357.69	350.33
$C0_{2mass}$ (grams)	5,419.62	5,361.32

Then:

(i) G_s for cold start test = [12.011/(12.011 + (1.008)(1.85))](37.08) + 0.429(357.69) + 0.273(5419.62) = 1665.10 grams

(ii) G_s for hot start test = [12.011/(12.011 + (1.008)(1.85))](28.82) + 0.429(350.33) + 0.273(5361.32) = 1638.88 grams

(iii) R_2 = 12.011/[12.011 + (1.008)1.85] = 0.866

(iv)(A) M_c = (1665.10/.866)(1/453.6) = 4.24 lbs (calculated), or

(B) = 4.24 lbs (directly measured).

(v)(A) M_H = (1638.88/.866)(1/453.6) = 4.17 lbs (calculated), or

(B) = 4.17 lbs (directly measured).

(2) Brake-specific fuel consumption results:

BSFC + (1/7)(4.24) =(6/7)(4.17)/(1/7)(6.945) + (6/7)(7.078) = 0.592 lbs of fuel/BHP − hr

(i) For dilute sampling systems which require conversion of as-measured dry concentrations to wet concentrations, the following equation shall be used for any combination of bagged, continuous, or fuel mass-approximated sample measurements (except for CO measurements made through conditioning columns, as explained in paragraph (d)(3) of this section):

Wet concentration = K_w × dry concentration.

Where:

(1)(i) For English units,

$K_w = 1-(\alpha/200) \times CO_2.(') - ((1.608 \times H)/(7000 + 1.608 \times H))$

See paragraph (d)(1) of this section for α values.

(ii) For SI units,

$K_w = 1-(\alpha/200) \times CO_2.(') - ((1.608 \times H)/(1000 + 1.608 \times H))$

See paragraph (d)(1) of this section for α values.

(2) $CO_2.(')$ = either $CO_2.$ or $CO_2.'$ as applicable.

(3)(i) H = Absolute humidity of the CVS dilution air, in grains (grams) of water per lb (kg) of dry air.

(ii) For English units,

$H' = [(43.478)R_i' \times P_d']/[P_B - (P_d' \times R_i'/100)]$

(iii) For SI units,

$H' = [(6.211)R_i' \times P_d']/[P_B - (P_d' \times R_i'/100)]$

(4) R_i = Relative humidity of the CVS dilution air, in percent.

(5) P_d = Saturated vapor pressure, in mm Hg (kPa) at the ambient dry bulb temperature of the CVS dilution air.

(6) P_B = Barometric pressure, mm Hg (kPa).

[54 FR 14605, Apr. 11, 1989, as amended at 62 FR 47135, Sept. 5, 1997]

§ 86.1342–94 Calculations; exhaust emissions.

Section 86.1342–94 includes text that specifies requirements that differ from § 86.1342–90. Where a paragraph in § 86.1342–90 is identical and applicable to § 86.1342–94, this may be indicated by specifying the corresponding paragraph and the statement ''[Reserved]. For guidance see § 86.1342–90.''

(a) introductory text [Reserved]. For guidance see § 86.1342–90.

(a)(1) A_{WM}=Weighted mass emission level (HC, CO, CO_2. or NO_X) in grams per brake horsepower-hour and, if appropriate, the weighted mass total hydrocarbon equivalent, formaldehyde, or non-methane hydrocarbon emission level in grams per brake horsepower-hour.

(a)(2) through (b)(7) [Reserved]. For guidance see § 86.1342–90.

(b)(8) Non-methane hydrocarbon mass:

$NMHC_{mass} = V_{mix} \times Density_{NMHC} \times (NMHC_{conc}/1,000,000)$

(c) through (d)(1)(i) [Reserved]. For guidance see § 86.1342–90.

(d)(1)(ii) $Density_{HC}$ = Density of hydrocarbons.

(A) For gasoline and the gasoline fraction of methanol-fuel, and may be used for petroleum and the petroleum fraction of methanol diesel fuel if desired; 16.33 g/ft^3-carbon atom (0.5768 kg/m^3-carbon atom).

(B) For #1 petroleum diesel fuel; 16.42 g/ft^3-carbon atom (0.5800 kg/m^3-carbon atom).

(C) For #2 diesel 16.27 g/ft^3-carbon atom (0.5746 kg/m^3-carbon atom). Average carbon to hydrogen ratios of 1:1.85 for gasoline, 1:1.93 for #1 petroleum diesel fuel and 1:1.80 for #2 petroleum diesel fuel are assumed at 68 °F (20 °C) and 760 mm Hg (101.3 kPa) pressure.

(D) For natural gas and liquified petroleum gas-fuel; 1.1771 (12.011+H/C (1.008)) g/ft^3-carbon atom (0.04157 (12.011+H/C (1.008)) kg/m^3-carbon atom) where H/C is hydrogen to carbon ratio of the hydrocarbon components of the test fuel, at 68 °F (20 °C) and 760 mm Hg (101.3 kPa) pressure.

(d)(1)(iii) through (d)(1)(iv)(A) [Reserved]. For guidance see § 86.1342–90.

(d)(1)(iv)(B) For petroleum-fueled, natural gas-fueled and liquified petroleum gas-fueled engines, HC_e is the FID measurement.

(d)(1)(iv)(C) through (d)(3)(v)(A) [Reserved]. For guidance see § 86.1342–90.

(d)(3)(v)(B) $CO_e = [1 - (0.01 + 0.005HCR)\ CO_2. - 0.000323R]\ CO_{em}$ for methanol-fuel, natural gas-fuel and liquified petroleum gas-fuel where HCR

is hydrogen to carbon ratio as measured for the fuel used.

Where:

(d)(3)(vi) through (d)(5)(iii)(B) [Reserved]. For guidance see § 86.1342–90.

(d)(5)(iv)(A) C_{CH3OHe}=Methanol concentration in the dilute exhaust, in ppm.

(B)

$$C_{CH3OHe} = \frac{3.813 \times 10^{-2} \times T_{EM}\left[\left(C_{S1} \times AV_{S1}\right) + \left(C_{S2} \times AV_{S2}\right)\right]}{P_B \times V_{EM}}$$

(v)(A) C_{CH3OHd}=Methanol concentration in the dilution air, in ppm

(B)

$$C_{CH3OHd} = \frac{3.813 \times 10^{-2} \times T_{DM}\left[\left(C_{D1} \times AV_{D1}\right) + \left(C_{D2} \times AV_{D2}\right)\right]}{P_B \times V_{DM`}}$$

(vi) T_{EM}=Temperature of methanol sample withdrawn from dilute exhaust, °R

(vii) T_{DM}=Temperature of methanol sample withdrawn from dilution air, °R

(viii) P_B=Barometric pressure during test, mm Hg.

(ix) V_{EM}=Volume of methanol sample withdrawn from dilute exhaust, ft^3

(x) V_{DM}=Volume of methanol sample withdrawn from dilution air, ft^3

(xi) C_S=GC concentration of sample drawn from dilute exhaust

(xii) C_D=GC concentration of sample drawn from dilution air

(xiii) AV_S=Volume of absorbing reagent (deionized water) in impinger through which methanol sample from dilute exhaust is drawn, ml

(xiv) AV_D=Volume of absorbing reagent (deionized water) in impinger through which methanol sample from dilution air is drawn, ml

(xv) 1=first impinger.

(xvi) 2=second impinger.

(d)(6)(i) through (d)(7)(i) [Reserved]. For guidance see § 86.1342–90.

(d)(7)(ii) For methanol-fueled vehicles, where fuel composition is $C_X H_y O_z$ as measured, or calculated, for the fuel used:

$$DF = \frac{\dfrac{x}{(100)x + y/2 = 3.76\left(x + y/2 - z/2\right)}}{CO_{2e} + \left(HC_e + CO_e + CH_3OH_e + HCHO_e\right)}$$

(d)(8)(i) [Reserved]. For guidance see § 86.1342–90.

(d)(8)(ii) For Otto-cycle engines: K_H=1/[1–0.0047(H–75)] (or for SI units, K_H=1/[1–0.0329(H–10.71)]).

(iii) For diesel engines: K_H = 1/[1–0.0026 (H–75)] (or for SI units = 1/[1–0.0182 (H–10.71)]).

Where:

(d)(8)(iv) through (d)(9)(x) [Reserved]. For guidance see § 86.1342–90.

(d)(10)(i) $NMHC_{conc}$ = HC_{conc}–$CH4_{conc}$

(ii) $Density_{NMHC}$ = The density of non-methane hydrocarbon, is 1.1771(12.011 + H/C (1.008)) g/ft^3-carbon atom (0.04157(12.011 + H/C (1.008))kg/m^3-carbon

atom), where H/C is the hydrogen to carbon ratio of the non-methane hydrocarbon components of the test fuel, at 68 °F (20 °C) and 760 mm Hg (101.3 kPa) pressure.

(iii)(A) CH_{4conc} = Methane concentration of the dilute exhaust sample corrected for background, in ppm carbon equivalent.

(B) $CH_{4conc} = r_{CH4} \times (CH_{4e} – CH_{4d}(1–1/DF))$

Where:

(*1*) CH_{4e} = Methane exhaust bag concentration in ppm carbon equivalent.

(*2*) CH_{4d} = Methane concentration of the dilution air in ppm carbon equivalent.

(*3*) r_{CH4} = HC FID response to methane for natural gas-fueled vehicles as measured in § 86.1321 (d).

(e) Through (i) [Reserved]. For guidance see § 86.1342–90.

[59 FR 48534, Sept. 21, 1994, as amended at 60 FR 34375, June 30, 1995; 62 FR 47135, Sept. 5, 1997]

§ 86.1343–88 Calculations; particulate exhaust emissions.

(a) The final reported transient emission test results shall be computed by use of the following formula:

$$P_{wm} = \frac{1/7\ P_C + 6/7\ P_H}{1/7\ BHP - hr_C + 6/7\ BHP - hr_H}$$

(1) P_{wm} = Weighted mass particulate, grams per brake horsepower-hour.

(2) P_C = Mass particulate measured during the cold-start test, grams.

(3) P_H = Mass particulate measured during the hot-start test, grams.

(4) BHP-hr_C = Total brake horsepower-hour (brake horsepower integrated with respect to time) for the cold-start test.

(5) BHP-hr_H = Total brake horsepower-hour (brake horsepower integrated with respect to time) for the hot-start test.

(b) The mass of particulate for the cold-start test and the hot-start test is determined from the following equation:

$$P_{mass} = (V_{mix} + V_{sf}) \times \left[\frac{P_f}{V_{sf}} - \left(\frac{P_{bf}}{V_{bf}} \times [1 - (1/DF)] \right) \right]$$

(1) P_{mass} = Mass of particulate emitted per test phase, grams per test phase. ($P_H = P_{mass}$ for the hot-start test and $P_C = P_{mass}$ for the cold-start test.

(2) V_{mix} = Total dilute exhaust volume corrected to standard conditions (528° R (293° K) and 760 mm Hg (101.3 kPa)), cubic feet per test phase. For a PDP-CVS:

$$V_{mix} = V_o \times \frac{N(P_B - P_4)(528°\,R)}{(760\ mm\ H_g)(T_p)},$$

in SI units,

$$V_{mix} = V_o \times \frac{N(P_B - P_4)(293°\,K)}{(101.3\ kPa)(T_p)},$$

Where:

(2)(i)(A) For a CFV-CVS: V_{mix} = Total dilute exhaust volume corrected to standard conditions (293 °K (20 °C) and 101.3 kPa (760 mm Hg)), cubic feet per test phase.

(B) For a PDP-CVS:

$$V_{mix} = V_o \times \frac{N(P_B - P_4)(528°\,R)}{(760mmHg)(T_p)},$$

in SI units,

$$V_{mix} = V_o \times \frac{N(P_B - P_4)(293°\,K)}{(101.3kPa)(T_p)},$$

Where:

(ii) V_o = Volume of gas pumped by the positive displacement pump, cubic feet (cubic meters) per revolution. This volume is dependent on the pressure

differential across the positive displacement pump.

(iii) N = Number of revolutions of the positive displacement pump during the test phase while samples are being collected.

(iv) P_B = Barometric pressure, mm Hg (kPa).

(v) P_4 = Pressure depressions below atmospheric measured at the inlet to the positive displacement pump (during an idle mode), mm Hg (kPa).

(vi) T_p = Average temperature of dilute exhaust entering the positive displacement pump during test, °R (°K).

(3) V_{sf} = Total volume of sample removed from the primary dilution tunnel, cubic feet at standard conditions.

(i) For a single-dilution system:

$$V_{sf} \frac{V_{as} \times (P_B + P_{is}) \times 528° R}{T_{is} \times 760 \text{ mm Hg},}$$

Where:

(A) V_{as} = Actual volume of dilute sample removed from the primary-dilution tunnel, cubic feet.

(B) P_B = Barometric pressure, mm Hg.

(C) P_{is} = Pressure elevation above ambient measured at the inlet to the dilute exhaust sample gas meter or flow instrumentation, mm Hg. (For most gas meters or flow instruments with unrestricted discharge, P_{is} is negligible and can be assumed = 0.)

(D) T_{is} = Average temperature of the dilute exhaust sample at the inlet to the gas meter or flow instrumentation, °R.

(E) V_{sf} may require correction according to § 86.1320–87(a)(6).

(ii) For a double-dilution system:

$V_{sf} = V_{vf} - V_{pf}'$

Where:

$$V_{vf} = \frac{V_{av} \times (P_B + P_{iv}) \times 528° R}{T_{iv} \times 760 \text{ mm Hg}}$$

(B) V_{av} = Actual volume of double diluted sample which passed through the particulate filter, cubic feet.

(C) P_B = Barometric pressure, mm Hg.

(D) P_{iv} = Pressure elevation above ambient measured at the inlet to the sample gas meter located at the exit side of the secondary-dilution tunnel, mm Hg. (For most gas meters with unrestricted discharge P_{iv} is negligible and can be assumed = 0.)

(E) T_{iv} = Average temperature of the dilute exhaust sample at the inlet to the exit side gas meter or flow instrumentation, °R.

$$V_{pf} = \frac{V_{ap} \times (P_a + P_{ip}) \times 528° R}{T_{ip} \times 760 \text{ mm Hg}}$$

(G) V_{ap} = Actual volume of secondary dilution air, cubic feet.

(H) P_a = Barometric pressure, mm Hg.

(I) P_{ip} = Pressure elevation above ambient measured at the inlet to the sample gas meter or flow instrumentation located at the inlet side of the secondary dilution tunnel, mm Hg. (For most gas meters with unrestricted discharge P_{ip} is negligible and can be assumed = 0.)

(J) T_{ip} = Average temperature of the secondary dilution air at the inlet to the inlet side gas meter or flow instrumentation, °R.

(K) Both V_{vf} and V_{pf} may require correction according to § 86.1320–87(a)(6). These corrections must be applied before V_{sf} is determined.

(4) P_f = Mass of particulate on the sample filter (or sample and back-up filters if the back-up filter is required to be included, see § 86.1339–87(g) for determination), grams per test phase.

(5) P_{bf} = Net weight of particulate on the background particulate filter, grams.

$$V_{bf} = \frac{V_{ab} \times (P_B + P_{ib}) \times 528° R,}{T_{ib} \times 760 \text{ mm Hg}}$$

Where:

(i) V_{ab} = Actual volume of primary dilution air sampled by background particulate sampler, cubic feet.

(ii) P_{ib} = Pressure elevation above ambient measured at the inlet to the background gas meter or flow instrument, mm Hg. (for most gas meters or flow instruments with unrestricted discharge, P_{ib} is negligible and can be assumed = 0.)

(iii) T_{ib} = Average temperature of the background sample at the inlet to the gas meter or flow instrument, °R.

(7) For definition of DF see § 86.1342–84(d)(5).

(8)(i) Real time flow rate measurement and calculating devices are permitted under these regulations. The appropriate changes in the above calculations shall be made using sound engineering principles.

(ii) Other systems and options, as permitted under these regulations, may require calculations other than these, but these must be based on sound engineering principles and be approved in advance by the Administrator at the time the alternate system is approved.

(Secs. 202, 203, 206, 207, 208, 301a, Clean Air Act, as amended; 42 U.S.C. 7521, 7522, 7525, 7541, 7542, 7601a)

[50 FR 10706, Mar. 15, 1985, as amended at 52 FR 47876, Dec. 16, 1987; 62 FR 47135, Sept. 5, 1997]

§ 86.1344–90 Required information.

(a) The required test data shall be grouped into the following three general categories:

(1) *Engine set up and descriptive data.* These data must be provided to the EPA supervisor of engine testing for each engine sent to the Administrator for confirmatory testing prior to the initiation of engine set-up. These data are necessary to ensure that EPA test personnel have the correct data in order to set up and test the engine in a timely and proper manner. These data are not required for tests performed by the manufacturers.

(2) *Pre-test data.* These data are general test data that must be recorded for each test. The data are of a more descriptive nature such as identification of the test engine, test site number, etc. As such, these data can be recorded at any time within 24 hours of the test.

(3) *Test data.* These data are physical test data that must be recorded at the time of testing.

(b) When requested, data shall be supplied in the format specified by the Administrator.

(c) *Engine set-up data.* Because specific test facilities may change with time, the specific data parameters and number of items may vary. The Application Format for Certification for the applicable model year will specify the exact requirements. In general, the following types of data will be required:

(1) Engine manufacturer.

(2) Engine system combination.

(3) Engine code and CID.

(4) Engine identification number.

(5) Applicable engine model year.

(6) Engine fuel type.

(7) Recommended oil type.

(8) Exhaust pipe configuration, pipe sizes, etc.

(9) Curb or low idle speed.

(10) Dynamometer idle speed. (Automatic transmission engines only.)

(11) Engine parameter specifications such as spark timing, operating temperature, advance curves, etc.

(12) Engine performance data, such as maximum BHP, previously measured rated rpm, fuel consumption, governed speed, etc.

(13) Recommended start-up procedure.

(14) Maximum safe engine operating speed.

(15) Number of hours of operation accumulated on engine.

(16) Manufacturer's recommended inlet depression limit and typical in-use inlet depression level.

(17) Exhaust system:

(i) *Petroleum-fueled and methanol-fueled diesel engines:*

(A) Header pipe inside diameter.

(B) Tailpipe inside diameter.

(C) Minimum distance in-use between the exhaust manifold flange and the exit of the chassis exhaust system.

(D) Manufacturer's recommended maximum exhaust backpressure limit for the engine.

(E) Typical backpressure, as determined by typical application of the engine.

(F) Minimum backpressure required to meet applicable noise regulations.

(ii) *Gasoline-fueled and methanol-fueled Otto-cycle engines:* Typical in-use backpressure in vehicle exhaust system.

(d) *Pre-test data.* The following data shall be recorded, and reported to the Administrator for each test conducted for compliance with the provisions of CFR part 86, subpart A:

(1) Engine-system combination.

(2) Engine identification.

(3) Instrument operator(s).

(4) Engine operator(s).

(5) Number of hours of operation accumulated on the engine prior to beginning the test sequence (Figure N84–10).

(6) Identification and specifications of test fuel used.

(7) Date of most recent analytical assembly calibration.

(8) All pertinent instrument information such as tuning, gain, serial numbers, detector number, calibration curve number, etc. As long as this information is traceable, it may be summarized by system or analyzer identification numbers.

(e) *Test data.* The physical parameters necessary to compute the test results and ensure accuracy of the results shall be recorded for each test conducted for compliance with the provisions of 40 CFR part 86, subpart A. Additional test data may be recorded at the discretion of the manufacturer. Extreme details of the test measurements such as analyzer chart deflections will generally not be required on a routine basis to be reported to the Administrator for each test, unless a dispute about the accuracy of the data arises. The following types of data shall be required to be reported to the Administrator. The Application Format for Certification for the applicable model year will specify the exact requirements which may change slightly from year to year with the addition or deletion of certain items.

(1) Date and time of day.

(2) Test number.

(3) Engine intake air or test cell temperature.

(4) Barometric pressure. (A central laboratory barometer may be used: *Provided*, that individual test cell barometric pressures are shown to be within ±0.1 percent of the barometric pressure at the central barometer location.)

(5) Engine intake or test cell and CVS dilution air humidity.

(6) Maximum torque versus speed curve as determined in § 86.1332, with minimum and maximum engine speeds, and a description of the mapping technique used.

(7) Measured maximum horsepower and maximum torque speeds.

(8) Measured maximum horsepower and torque.

(9) Measured high idle engine speed (governed petroleum-fueled and methanol-fueled diesel engines only).

(10) Measured fuel consumption at maximum power and torque (petroleum-fueled and methanol-fueled diesel engines only).

(11) Cold-soak time interval and cool down procedures.

(12) Temperature set point of the heated continuous analysis system components (if applicable).

(13) Test cycle validation statistics as specified in § 86.1341 for each test phase (cold and hot).

(14) Total CVS flow rate with dilution factor for each test phase (cold and hot).

(15) Temperature of the dilute exhaust mixture and secondary dilution air (in the case of a double dilution system) at the inlet to the respective gas meter(s) or flow instrumentation used for particulate sampling.

(16) The maximum temperature of the dilute exhaust mixture immediately ahead of the particulate filter.

(17) Sample concentrations (background corrected) for HC, CO, CO_2. and NO_X for each test phase (cold and hot).

(18) *For methanol-fueled vehicles:*

(i) Volume of sample passed through the methanol sampling system and the volume of deionized water in each impinger.

(ii) The methanol concentration in the reference sample and the peak area from the GC analysis of the reference sample.

(iii) The peak area of the GC analyses of the test samples (methanol).

(iv) Volume of sample passed through the formaldehyde sampling system.

(v) The formaldehyde concentration in the reference sample and the peak area from the LC analysis of the reference sample.

(vi) The peak area of the LC analysis of the test sample (formaldehyde).

(vii) Specification of the methanol-fuel used during testing.

(19) The stabilized pre-test weight and post-test weight of each particulate sample and back-up filter or pair of filters.

(20) Brake specific emissions (g/BHP-hr) for HC, CO, NO_X and, if applicable, THCE, CH_3OH and HCHO for methanol-

fueled vehicles for each test phase (cold and hot).

(21) The weighted (cold and hot) brake specific emissions (g/BHP-hr) for the total test.

(22) The weighted (cold and hot) carbon balance or mass-measured brake specific fuel consumption for the total test.

(23) The number of hours of operation accumulated on the engine after completing the test sequences described in Figure N84–10.

[54 FR 14610, Apr. 11, 1989]

§ 86.1344–94 Required information.

(a) The required test data shall be grouped into the following three general categories:

(1) *Engine set up and descriptive data.* These data must be provided to the EPA supervisor of engine testing for each engine sent to the Administrator for confirmatory testing prior to the initiation of engine set-up. These data are necessary to ensure that EPA test personnel have the correct data in order to set up and test the engine in a timely and proper manner. These data are not required for tests performed by the manufacturers.

(2) *Pre-test data.* These data are general test data that must be recorded for each test. The data are of a more descriptive nature such as identification of the test engine, test site number, etc. As such, these data can be recorded at any time within 24 hours of the test.

(3) *Test data.* These data are physical test data that must be recorded at the time of testing.

(b) When requested, data shall be supplied in the format specified by the Administrator.

(c) *Engine set-up data.* Because specific test facilities may change with time, the specific data parameters and number of items may vary. The Application Format for Certification for the applicable model year will specify the exact requirements. In general, the following types of data will be required:

(1) Engine manufacturer.

(2) Engine system combination.

(3) Engine code and CID.

(4) Engine identification number.

(5) Applicable engine model year.

(6) Engine fuel type.

(7) Recommended oil type.

(8) Exhaust pipe configuration, pipe sizes, etc.

(9) Curb or low idle speed.

(10) Dynamometer idle speed (automatic transmission engines only).

(11) Engine parameter specifications such as spark timing, operating temperature, advance curves, etc.

(12) Engine performance data, such as maximum BHP, previously measured rated rpm, fuel consumption, governed speed, etc.

(13) Recommended start-up procedure.

(14) Maximum safe engine operating speed.

(15) Number of hours of operation accumulated on engine.

(16) Manufacturer's recommended inlet depression limit and typical in-use inlet depression level.

(17) Exhaust system:

(i) *Diesel engines:*

(A) Header pipe inside diameter.

(B) Tailpipe inside diameter.

(C) Minimum distance in-use between the exhaust manifold flange and the exit of the chassis exhaust system.

(D) Manufacturer's recommended maximum exhaust backpressure limit for the engine.

(E) Typical backpressure, as determined by typical application of the engine.

(F) Minimum backpressure required to meet applicable noise regulations.

(ii) *Otto-cycle engines:* Typical in-use backpressure in vehicle exhaust system.

(d) *Pre-test data.* The following data shall be recorded and reported to the Administrator for each test conducted for compliance with the provisions of subpart A of this part:

(1) Engine-system combination.

(2) Engine identification.

(3) Instrument operator(s).

(4) Engine operator(s).

(5) Number of hours of operation accumulated on the engine prior to beginning the test sequence (Figure N84–10).

(6) Identification and specifications of test fuel used.

(7) Date of most recent analytical assembly calibration.

(8) All pertinent instrument information such as tuning, gain, serial numbers, detector number, calibration curve number, etc. As long as this information is traceable, it may be summarized by system or analyzer identification numbers.

(e) *Test data.* The physical parameters necessary to compute the test results and ensure accuracy of the results shall be recorded for each test conducted for compliance with the provisions of subpart A of this part. Additional test data may be recorded at the discretion of the manufacturer. Extreme details of the test measurements such as analyzer chart deflections will generally not be required on a routine basis to be reported to the Administrator for each test, unless a dispute about the accuracy of the data arises. The following types of data shall be required to be reported to the Administrator. The Application Format for Certification for the applicable model year will specify the exact requirements which may change slightly from year to year with the addition or deletion of certain items.

(1) Date and time of day.

(2) Test number.

(3) Engine intake air or test cell temperature.

(4) Barometric pressure. (A central laboratory barometer may be used: *Provided*, that individual test cell barometric pressures are shown to be within ±0.1 percent of the barometric pressure at the central barometer location.)

(5) Engine intake or test cell and CVS dilution air humidity.

(6) Maximum torque versus speed curve as determined in § 86.1332, with minimum and maximum engine speeds, and a description of the mapping technique used.

(7) Measured maximum horsepower and maximum torque speeds.

(8) Measured maximum horsepower and torque.

(9) Measured high idle engine speed (governed diesel engines only).

(10) Measured fuel consumption at maximum power and torque (diesel engines only).

(11) Cold-soak time interval and cool down procedures.

(12) Temperature set point of the heated continuous analysis system components (if applicable).

(13) Test cycle validation statistics as specified in § 86.1341 for each test phase (cold and hot).

(14) Total CVS flow rate with dilution factor for each test phase (cold and hot).

(15) Temperature of the dilute exhaust mixture and secondary dilution air (in the case of a double dilution system) at the inlet to the respective gas meter(s) or flow instrumentation used for particulate sampling.

(16) The maximum temperature of the dilute exhaust mixture immediately ahead of the particulate filter.

(17) Sample concentrations (background corrected) for HC, CO, CO_2 and NO_X for each test phase (cold and hot).

(18) For engines requiring methanol and/or formaldehyde measurement (as applicable):

(i) Volume of sample passed through the methanol sampling system and the volume of deionized water in each impinger.

(ii) The methanol concentration of the GC analyses of the test samples, μg/ml.

(iii) Volume of sample passed through the formaldehyde sampling system.

(iv) The formaldehyde concentration of the LC analysis of the test sample, μg/ml.

(v) Specification of the methanol test fuel, or fuel mixtures, used during testing.

(vi) A continuous measurement of the dew point of the raw and diluted exhaust. This requirement may be omitted if the temperatures of all heated lines are kept above 220 °F, or if the manufacturer performs an engineering analysis demonstrating that the temperature of the heated systems remains above the maximum dew point of the gas stream throughout the course of the test.

(19) For natural gas-fueled engines: Composition, including all carbon containing compounds; *e.g.*, CO_2. of the natural gas-fuel used during the test. C_1 and C_2 compounds shall be individually reported. C_3 and heavier compounds, and C_6 and heavier compounds may be reported as a group.

(20) For liquefied petroleum gas-fueled engines: Composition of the liquefied petroleum gas-fuel used during the test. Each hydrocarbon compound present, through C_4 compounds, shall be individually reported. C_5 and heavier hydrocarbons may be reported as a group.

(21) The stabilized pre-test weight and post-test weight of each particulate sample and back-up filter or pair of filters.

(22) Brake specific emissions (g/BHP-hr) for HC, CO, NO_X, and, if applicable NMHC, NMHCE, THCE, CH_3OH, and HCHO for each test phase (cold and hot).

(23) The weighted (cold and hot) brake specific emissions (g/BHP-hr) for the total test.

(24) The weighted (cold and hot) carbon balance or mass-measured brake specific fuel consumption for the total test.

(25) The number of hours of operation accumulated on the engine after completing the test sequences described in Figure N84–10.

[59 FR 48535, Sept. 21, 1994, as amended at 60 FR 34376, June 30, 1995; 62 FR 54730, Oct. 21, 1997]

§86.1360–2007 Supplemental emission test; test cycle and procedures.

The test procedures of this subpart N apply for supplemental emission testing, except as specified otherwise in this section.

(a) *Applicability*. This section applies to 2007 and later diesel heavy duty engines.

(b) *Test cycle*. (1) Perform testing as described in §86.1362–2007 for determining whether an engine meets the applicable standards when measured over the supplemental emission test.

(2) For engines not certified to a NO_X standard or FEL less than 1.5 g/bhp-hr, EPA may select, and require the manufacturer to conduct the test using, up to three discrete test points within the control area defined in paragraph (d) of this section. EPA will notify the manufacturer of these supplemental test points in writing in a timely manner before the test. Emission sampling for these discrete test modes must include all regulated pollutants except particulate matter.

(c) [Reserved]

(d) *Determining the control area*. The control area extends from the engine speed A to C, as defined in paragraph (c) of this section, and extends from 25 to 100 percent load.

(e) [Reserved]

(f) *Maximum allowable emission limits*. (1) For gaseous emissions, the 12 non-idle test point results and the four-point linear interpolation procedure specified in paragraph (g) of this section for intermediate conditions, shall define Maximum Allowable Emission Limits for purposes of §86.007–11(a)(3) except as modified under paragraph (f)(3) of this section. Each engine shall have it's own Maximum Allowable Emission Limits generated from the 12 non-idle supplemental steady state test points from that engine. The control area extends from the 25% to the 75% engine speeds, at engine loads of 25% to 100%, as defined in paragraph (d) of this section. Figure 1 of this paragraph (f)(1) depicts a sample Maximum Allowable Emission Limit curve, for illustration purposes only, as follows:

Figure 1

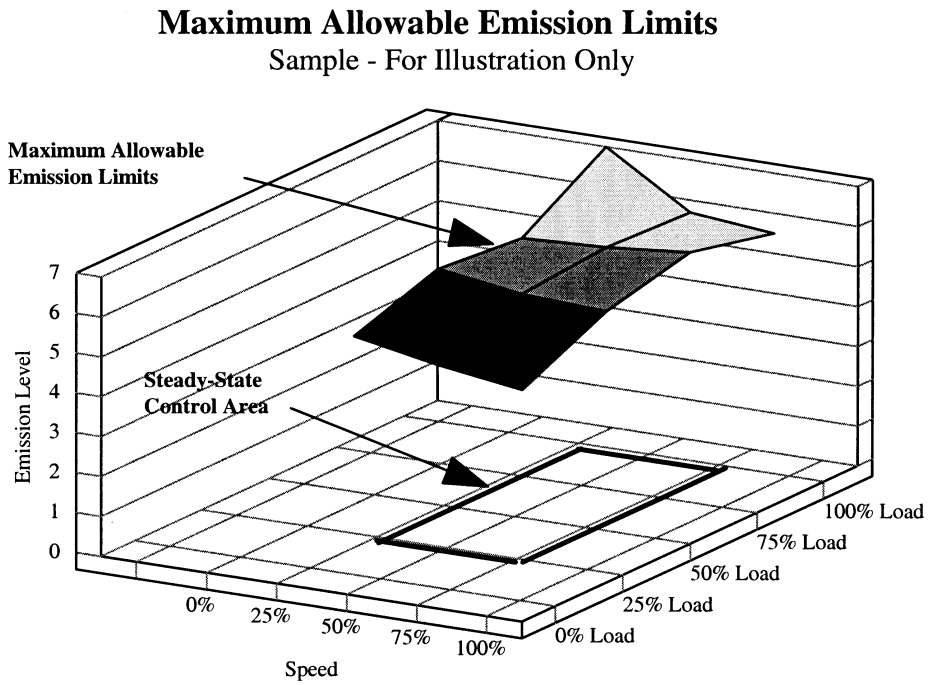

(2) If the weighted average emissions, calculated according to paragraph (e)(6) of this section, for any gaseous pollutant is equal to or lower than required by § 86.007–11(a)(3), each of the 13 test values for that pollutant shall first be multiplied by the ratio of the applicable emission standard (under § 86.007–11(a)(3)) to the weighted average emissions value, and then by 1.10 for interpolation allowance, before determining the Maximum Allowable Emission Limits under paragraph (f)(1) of this section.

(3) If the Maximum Allowable Emission Limit for any point, as calculated under paragraphs (f)(1) and (2) of this section, is greater than the applicable Not-to-Exceed limit (if within the Not-to-Exceed control area defined in § 86.1370–2007(b)), then the Maximum Allowable Emission Limit for that point shall be defined as the applicable Not-to-Exceed limit.

(g) *Calculating intermediate test points.* (1) For the three test points selected by EPA under paragraph (b)(2) of this section, the emissions must be measured and calculated as described in paragraph (e)(6)(i) of this section (except that n = 1 and WF = 1). The measured values then must be compared to the interpolated values according to paragraph (g)(3) of this section. The interpolated values are determined from the modes of the test cycle closest to the respective test point according to paragraph (g)(2) of this section.

(2) Interpolating emission values from the test cycle. The gaseous emissions for each regulated pollutant for each of the control points (Z) must be interpolated from the four closest modes of the test cycle that envelop

the selected control point Z as shown in Figure 2 of this paragraph (g)(2).

(i) For these modes (R, S, T, U), the following definitions apply:

(A) Speed (R) = Speed(T) = n_{RT}.

(B) Speed (S) = Speed(U) = n_{SU}.

(C) Per cent load (R) = Per cent load (S).

(D) Per cent load (T) = Per cent load (U).

(ii) The interpolated value of the brake specific gaseous emissions of the selected control point Z(EZ) must be calculated as follows:

$E_Z = E_{RS} + (E_{TU}–E_{RS}) * (M_Z–M_{RS}) / (M_{TU}–M_{RS})$

$E_{TU} = E_T + (E_U–E_T) * (n_Z–n_{RT}) / (n_{SU}–n_{RT})$

$E_{RS} = E_R + (E_S–E_R) * (n_Z–n_{RT}) / (n_{SU}–n_{RT})$

$M_{TU} = M_T + (M_U–M_T) * (n_Z–n_{RT}) / (n_{SU}–n_{RT})$

$M_{RS} = M_R + (M_S–M_R) * (n_Z–n_{RT}) / (n_{SU}–n_{RT})$

Where:

E_R, E_S, E_T, E_U = for each regulated pollutant, brake specific gaseous emissions of the enveloping modes adjusted according to the factors in(f)(2).

M_R, M_S, M_T, M_U = engine torque of the enveloping modes.

M_Z = engine torque of the selected control point Z.

n_Z = engine speed of the selected control point Z.

(iii) Figure 2 follows:

Figure 2
Four-Point Linear Interpolation

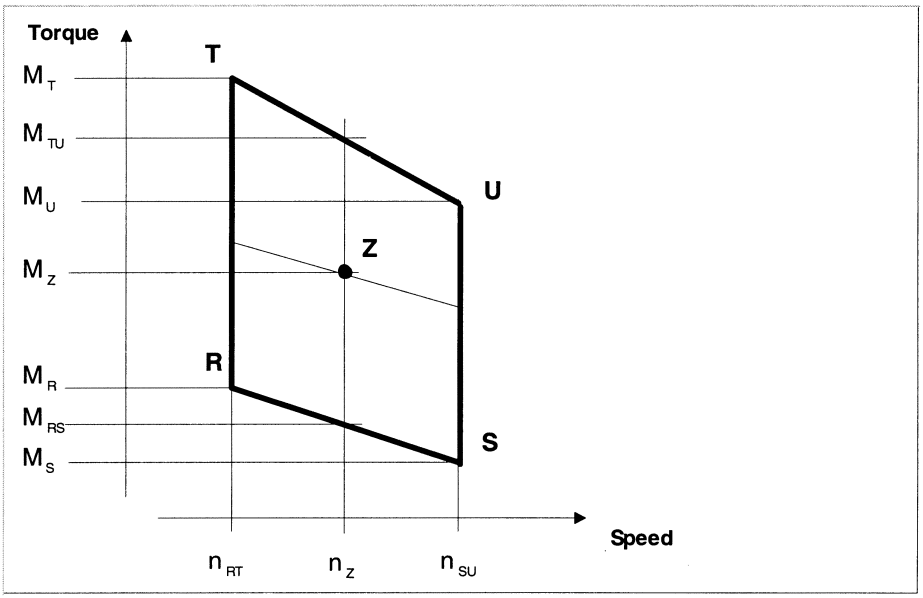

(3) *Comparing calculated and interpolated emission values.* The measured brake specific gaseous emissions of the control point Z (X_Z) must be less than or equal to the interpolated value (E_Z).

[65 FR 59958, Oct. 6, 2000, as amended at 66 FR 5188, Jan. 18, 2001; 70 FR 40439, July 13, 2005]

§86.1362–2007 Steady-state testing with a ramped-modal cycle.

This section describes how to test engines under steady-state conditions. Manufacturers may alternatively use the procedures specified in §86.1363–2007 through the 2009 model year.

(a) Start sampling at the beginning of the first mode and continue sampling until the end of the last mode. Calculate emissions as described in 40 CFR 1065.650 and cycle statistics as described in 40 CFR 1065.514.

(b) Measure emissions by testing the engine on a dynamometer with the following ramped-modal duty cycle to determine whether it meets the applicable steady-state emission standards:

RMC mode	Time in mode (seconds)	Engine speed [1,2]	Torque (percent) [2,3]
1a Steady-state	170	Warm Idle	0
1b Transition	20	Linear Transition	Linear Transition
2a Steady-state	170	A	100
2b Transition	20	A	Linear Transition
3a Steady-state	102	A	25
3b Transition	20	A	Linear Transition
4a Steady-state	100	A	75
4b Transition	20	A	Linear Transition
5a Steady-state	103	A	50
5b Transition	20	Linear Transition	Linear Transition
6a Steady-state	194	B	100
6b Transition	20	B	Linear Transition
7a Steady-state	219	B	25
7b Transition	20	B	Linear Transition
8a Steady-state	220	B	75
8b Transition	20	B	Linear Transition
9a Steady-state	219	B	50
9b Transition	20	Linear Transition	Linear Transition
10a Steady-state	171	C	100
10b Transition	20	C	Linear Transition
11a Steady-state	102	C	25
11b Transition	20	C	Linear Transition
12a Steady-state	100	C	75
12b Transition	20	C	Linear Transition
13a Steady-state	102	C	50
13b Transition	20	Linear Transition	Linear Transition
14 Steady-state	168	Warm Idle	0

[1] Speed terms are defined in 40 CFR part 1065.
[2] Advance from one mode to the next within a 20-second transition phase. During the transition phase, command a linear progression from the speed or torque setting of the current mode to the speed or torque setting of the next mode.
[3] The percent torque is relative to maximum torque at the commanded engine speed.

(c) During idle mode, operate the engine with the following parameters:

(1) Hold the speed within your specifications.

(2) Set the engine to operate at its minimum fueling rate.

(3) Keep engine torque under 5 percent of maximum test torque.

(d) For full-load operating modes, operate the engine at its maximum fueling rate.

(e) See 40 CFR part 1065 for detailed specifications of tolerances and calculations.

(f) Perform the ramped-modal test with a warmed-up engine. If the ramped-modal test follows directly after testing over the Federal Test Procedure, consider the engine warm. Otherwise, operate the engine to warm it up as described in 40 CFR part 1065, subpart F.

[70 FR 40439, July 13, 2005]

§ 86.1363–2007 Steady-state testing with a discrete-mode cycle.

This section describes an alternate procedure for steady-state testing that manufacturers may use through the 2009 model year.

(a) Use the following 13-mode cycle in dynamometer operation on the test engine:

Mode number	Engine speed [1]	Percent load [2]	Weighting factors	Mode length (minutes) [3]
1	Idle		0.15	4
2	A	100	0.08	2
3	B	50	0.10	2
4	B	75	0.10	2
5	A	50	0.05	2

Mode number	Engine speed [1]	Percent load [2]	Weighting factors	Mode length (minutes) [3]
6	A	75	0.05	2
7	A	25	0.05	2
8	B	100	0.09	2
9	B	25	0.10	2
10	C	100	0.08	2
11	C	25	0.05	2
12	C	75	0.05	2
13	C	50	0.05	2

[1] Speed terms are defined in 40 CFR part 1065.
[2] The percent torque is relative to the maximum torque at the commanded test speed.
[3] The percent torque is relative to maximum torque at the commanded engine speed.

(b) Prior to beginning the test sequence, the engine must be warmed-up according to the procedures in §86.1332–90(d)(3)(i) through (iv).

(c) The test must be performed in the order of the mode numbers in paragraph (a) of this section. Where applicable, the EPA-selected test points identified under §86.1360–2007(b)(2) must be performed immediately upon completion of mode 13. The engine must be operated for the prescribed time in each mode, completing engine speed and load changes in the first 20 seconds of each mode. The specified speed must be held to within ±50 rpm and the specified torque must be held to within plus or minus two percent of the maximum torque at the test speed.

(d) One filter shall be used for sampling PM over the 13-mode test procedure. The modal weighting factors specified in paragraph (a) of this section shall be taken into account by taking a sample proportional to the exhaust mass flow during each individual mode of the cycle. This can be achieved by adjusting sample flow rate, sampling time, and/or dilution ratio, accordingly, so that the criterion for the effective weighting factors is met. The sampling time per mode must be at least 4 seconds per 0.01 weighting factor. Sampling must be conducted as late as possible within each mode. Particulate sampling shall be completed no earlier than 5 seconds before the end of each mode.

(e) The test must be conducted with all emission-related engine control variables in the highest brake-specific NO_X emissions state which could be encountered for a 30 second or longer averaging period at the given test point and for the conditions under which the engine is being tested.

(f) Manufacturers must follow the exhaust emissions sample analysis procedures under §86.1340, and the calculation formulas and procedures under §86.1342, for the 13-mode cycle and the 3 EPA-selected test points as applicable for steady-state testing, including the NO_X correction factor for humidity.

(g) Calculate the weighted average emissions as follows:

(1) For each regulated gaseous pollutant, calculate the weighted average emissions using the following equation:

$$A_{WA} = 1 - \frac{\sum_{i=1}^{N}\left[A_{Mi} \cdot WF_i\right]}{\sum_{i=2}^{N}\left[A_{Pi} - WF_i\right]}$$

Where:

A_{WA} = Weighted average emissions for each regulated gaseous pollutant, in grams per brake horse-power hour.

A_M = Modal average mass emissions level, in grams per hour. Mass emissions must be calculated as described in §86.1342.

A_P = Modal average power, in brake horsepower. Any power measured during the idle mode (mode 1) is not included in this calculation.

WF = Weighting factor corresponding to each mode of the steady-state test cycle, as defined in paragraph (a) of this section.

i = The modes of the steady-state test cycle defined in paragraph (a) of this section.

n = 13, corresponding to the 13 modes of the steady-state test cycle defined in paragraph (a) of this section.

(2) For PM measurements, a single filter must be used to measure PM over the 13 modes. The brake-specific PM emission level for the test must be calculated as described for a transient hot start test in §86.1343. Only the power measured during the sampling period shall be used in the calculation.

(h) The test fuel used for supplemental steady-state testing under this section must meet the requirements of § 86.1313.

(i) Ambient conditions, charge cooling specifications, and intake and exhaust restrictions for supplemental steady-state testing and maximum allowable emission limit testing under this section must meet the requirements of § 86.1330.

[70 FR 40440, July 13, 2005]

§ 86.1370–2007 Not-To-Exceed test procedures.

(a) *General*. The purpose of this test procedure is to measure in-use emissions of heavy-duty diesel engines while operating within a broad range of speed and load points (the Not-To-Exceed Control Area) and under conditions which can reasonably be expected to be encountered in normal vehicle operation and use. Emission results from this test procedure are to be compared to the Not-To-Exceed Limits specified in § 86.007–11(a)(4), or to later Not-To-Exceed Limits. The Not-To-Exceed Limits do not apply for engine-starting conditions. Tests conducted using the procedures specified in § 86.1301 are considered valid Not-To-Exceed tests (NOTE: duty cycles and limits on ambient conditions do not apply for Not-To-Exceed tests).

(b) *Not-to-exceed control area for diesel heavy-duty engines*. The Not-To-Exceed Control Area for diesel heavy-duty engines consists of the following engine speed and load points:

(1) All operating speeds greater than the speed calculated using the following formula, where n_{hi} and n_{lo} are determined according to the provisions in § 86.1360(c):

$$n_{lo}+0.15\times(n_{hi}-n_{lo})$$

(2) All engine load points greater than or equal to 30% or more of the maximum torque value produced by the engine.

(3) Notwithstanding the provisions of paragraphs (b)(1) and (b)(2) of this section, all operating speed and load points with brake specific fuel consumption (BSFC) values within 5% of the minimum BSFC value of the engine. For the purposes of this requirement, BFSC must be calculated under the general test cell conditions specified in § 86.1330. The manufacturer may petition the Administrator at certification to exclude such points if the manufacturer can demonstrate that the engine is not expected to operate at such points in normal vehicle operation and use. Engines equipped with drivelines with multi-speed manual transmissions or automatic transmissions with a finite number of gears are not subject to the requirements of this paragraph (b)(3).

(4) Notwithstanding the provisions of paragraphs (b)(1) through (b)(3) of this section, speed and load points below 30% of the maximum power value produced by the engine shall be excluded from the Not-To-Exceed Control Area for all emissions.

(5) [Reserved]

(6)(i) For petroleum-fueled diesel cycle engines, the manufacturer may identify particular engine-vehicle combinations and may petition the Administrator at certification to exclude operating points from the Not-to-Exceed Control Area defined in § 86.1370(b)(1) through (5) if the manufacturer can demonstrate that the engine is not capable of operating at such points when used in the specified engine-vehicle combination(s).

(ii) For diesel cycle engines that are not petroleum-fueled, the manufacturer may petition the Administrator at certification to exclude operating points from the Not-to-Exceed Control Area defined in § 86.1370(b)(1) through (5) if the manufacturer can demonstrate that the engine is not expected to operate at such points in normal vehicle operation and use.

(7) Manufacturers may petition the Administrator to limit NTE testing in a single defined region of speeds and loads. Such a defined region must generally be of elliptical or rectangular shape, and must share some portion of its boundary with the outside limits of the NTE zone. Under this provision testing would not be allowed with sampling periods in which operation within that region constitutes more than 5.0 percent of the time-weighted operation within the sampling period. Approval of this limit by the Administrator is contingent on the manufacturer satisfactorily demonstrating that operation

at the speeds and loads within that region accounts for less than 5.0 percent of all in-use operation (weighted by vehicle-miles-traveled or other EPA-approved weightings) for the in-use engines of that configuration (or sufficiently similar engines). At a minimum, this demonstration must include operational data from representative in-use vehicles.

(c) [Reserved]

(d) *Not-to-exceed control area limits.* (1) When operated within the Not-To-Exceed Control Area defined in paragraph (b) of this section, diesel engine emissions shall not exceed the applicable Not-To-Exceed Limits specified in §86.007–11(a)(4) when averaged over any period of time greater than or equal to 30 seconds, except where a longer averaging period is required by paragraph (d)(2) of this section.

(2) For engines equipped with emission controls that include discrete regeneration events, if a regeneration event occurs during the NTE test, then the averaging period must be at least as long as the time between the events multiplied by the number of full regeneration events within the sampling period. The requirement in this paragraph (d)(2) only applies for engines that send an electronic signal indicating the start of the regeneration event.

(e) *Ambient corrections.* The measured data shall be corrected based on the ambient conditions under which it was taken, as specified in this section.

(1) For engines operating within the ambient conditions specified in §86.007–11(a)(4)(ii)(a):

(i) NO_X emissions shall be corrected for ambient air humidity to a standard humidity level of 50 grains (7.14 g/kg) if the humidity of the intake air was below 50 grains, or to 75 grains (10.71 g/kg) if above 75 grains.

(ii) NO_X and PM emissions shall be corrected for ambient air temperature to a temperature of 55 degrees F (12.8 degrees C) for ambient air temperatures below 55 degrees F or to 95 degrees F (35.0 degrees C) if the ambient air temperature is above 95 degrees F.

(iii) No ambient air temperature or humidity correction factors shall be used within the ranges of 50–75 grains or 55–95 degrees F.

(iv) Where test conditions require such correction factors, the manufacturer must use good engineering judgement and generally accepted engineering practice to determine the appropriate correction factors, subject to EPA review.

(2) For engines operating within the ambient conditions specified in §86.007–11(a)(4)(ii)(b):

(i) NO_X emissions shall be corrected for ambient air humidity to a standard humidity level of 50 grains (7.14 g/kg) if the humidity of the intake air was below 50 grains, or to 75 grains (10.71 g/kg) if above 75 grains.

(ii) NO_X and PM emissions shall be corrected for ambient air temperature to a temperature of 55 degrees F (12.8 degrees C) for ambient air temperatures below 55 degrees F.

(iii) No ambient air temperature or humidity correction factors shall be used within the ranges of 50–75 grains or for temperatures greater than or equal to 55 degrees F.

(iv) Where test conditions require such correction factors, the manufacturer must use good engineering judgement and generally accepted engineering practice to determine the appropriate correction factors, subject to EPA review.

(f) *NTE cold temperature operating exclusion.* Engines equipped with exhaust gas recirculation (EGR) whose operation within the NTE control area specified in §86.1370(b) when operating during cold temperature conditions as specified in paragraph (f)(1) of this section are not subject to the NTE emission limits during the specified cold temperature operation conditions.

(1) Cold temperature operation is defined as engine operating conditions meeting either of the following two criteria:

(i) Intake manifold temperature (IMT) less than or equal to the temperature defined by the following relationship between IMT and absolute intake manifold pressure (IMP) for the corresponding IMP:

$$P = 0.0875 \times IMT - 7.75 \qquad \text{Equation (1)}$$

Where:

P = absolute intake manifold pressure in bars.

IMT = intake manifold temperature in degrees Fahrenheit.

(ii) Engine coolant temperature (ECT) less than or equal to the temperature defined by the following relationship between ECT and absolute intake manifold pressure (IMP) for the corresponding IMP:

$$P = 0.0778 \times ECT - 9.8889 \quad \text{Equation (2)}$$

Where:

P = absolute intake manifold pressure in bars.

ECT = engine coolant temperature in degrees Fahrenheit.

(2) [Reserved]

(g) *NO_X and NMHC aftertreatment warm-up.* For engines equipped with one or more aftertreatment devices that reduce NO_X or NMHC emissions, the NTE NO_X and NMHC emission limits do not apply when the exhaust gas temperature is measured within 12 inches of the outlet of the aftertreatment device and is less the 250 °C. For multi-bed systems, it is the temperature at the outlet of the device with the maximum flow rate that determines whether the NTE limits apply.

[65 FR 59961, Oct. 6, 2000, as amended at 66 FR 5188, Jan. 18, 2001; 70 FR 40441, July 13, 2005]

§ 86.1372–2007 Measuring smoke emissions within the NTE zone.

This section contains the measurement techniques to be used for determining compliance with the filter smoke limit or opacity limits in § 86.007–11(b)(1)(iv).

(a) For steady-state or transient smoke testing using full-flow opacimeters, equipment meeting the requirements of subpart I of this part or ISO/DIS–11614 ''Reciprocating internal combustion compression-ignition engines—Apparatus for measurement of the opacity and for determination of the light absorption coefficient of exhaust gas'' is required. This document is incorporated by reference (see § 86.1).

(1) All full-flow opacimeter measurements shall be reported as the equivalent percent opacity for a five inch effective optical path length using the Beer-Lambert relationship.

(2) Zero and full-scale (100 percent opacity) span shall be adjusted prior to testing.

(3) Post test zero and full scale span checks shall be performed. For valid tests, zero and span drift between the pre-test and post-test checks shall be less than two percent of full-scale.

(4) Opacimeter calibration and linearity checks shall be performed using manufacturer's recommendations or good engineering practice.

(b) For steady-state testing using a filter-type smokemeter, equipment meeting the requirements of ISO/FDIS–10054 ''Internal combustion compression-ignition engines—Measurement apparatus for smoke from engines operating under steady-state conditions—Filter-type smokemeter'' is recommended. Other equipment may be used provided it is approved in advance by the Administrator.

(1) All filter-type smokemeter results shall be reported as a filter smoke number (FSN) that is similar to the Bosch smoke number (BSN) scale.

(2) Filter-type smokemeters shall be calibrated every 90 days using manufacturer's recommended practices or good engineering practice.

(c) For steady-state testing using a partial-flow opacimeter, equipment meeting the requirements of ISO–8178–3 and ISO/DIS–11614 is recommended. Other equipment may be used provided it is approved in advance by the Administrator.

(1) All partial-flow opacimeter measurements shall be reported as the equivalent percent opacity for a five inch effective optical path length using the Beer-Lambert relationship.

(2) Zero and full scale (100 percent opacity) span shall be adjusted prior to testing.

(3) Post-test zero and full scale span checks shall be performed. For valid tests, zero and span drift between the pre-test and post-test checks shall be less than two percent of full scale.

(4) Opacimeter calibration and linearity checks shall be performed using manufacturer's recommendations or good engineering practice.

(d) Replicate smoke tests may be run to improve confidence in a single test or stabilization. If replicate tests are

run, three additional tests which confirm to this section shall be run, and the final reported test results must be the average of all the valid tests.

(e) A minimum of thirty seconds sampling time shall be used for average transient smoke measurements. The opacity values used for this averaging must be collected at a minimum rate of 1 data point per second, and all data points used in the averaging must be equally spaced in time.

[65 FR 59962, Oct. 6, 2000]

§ 86.1375–2007 Equipment specifications for field testing.

For testing conducted with engines installed in vehicles, including field testing conducted to measure emissions under Not-To-Exceed test procedures, use the test procedures and equipment specified in 40 CFR part 1065, subpart J.

[70 FR 34619, June 14, 2005]

§ 86.1380–2004 Load response test.

(a) *General*. This section applies to 2004 through 2007 model year heavy-duty diesel engines. The purpose of this test procedure is to measure the brake-specific gaseous and particulate emissions from a heavy-duty diesel engine as it is suddenly loaded, with its fueling lever, at a given engine operating speed. The results of this test procedure are not compared to emission standards, and this test is not considered part of the Federal Test Procedure. This procedure shall be conducted on a dynamometer.

(b) *Test conditions and equipment*. All laboratory conditions, laboratory equipment, engine set-up procedures, test fuel, and testing conditions specified in this subpart for transient testing shall apply to the Load Response Test where applicable.

(c) *Test sequence*. (1) The test has 5 separate measurement segments, each identified by a specific engine speed. At each of the following speeds, beginning with the lowest torque point at that engine speed within the NTE control area for NMHC+NO_X, the engine fuel control shall be moved suddenly to the full fuel position and held at that point for four seconds, while the specified speed is maintained constant within the tolerances of the test facility. After the four second full fuel position, the load should be immediately brought back to the minimum NTE control area load for the specified engine speed for a period of 6 seconds. Prior to the beginning of each measurement segment, the engine shall be warmed up at the supplemental steady-state Mode 4 conditions (75% engine load, Speed B as specified in § 86.1360) until engine oil temperature has stabilized.

(i) Speed A as determined in § 86.1360(c);

(ii) Speed B as determined in § 86.1360(c);

(iii) Speed C as determined in § 86.1360(c);

(iv) Speed D as determined in § 86.1360(c);

(v) Speed E as determined in § 86.1360(c).

(2) The test sequence at each engine speed may be repeated, without pause between repeats, if it is necessary to obtain sufficient particulate matter sample amount for analysis.

(3) The exhaust emissions sample shall be analyzed using the applicable procedures under § 86.1340, and the exhaust emission shall be calculated using the applicable procedures under § 86.1342, for each measurement segment. Sampling rates for engine speed, engine load, and gaseous emissions shall performed a minium rate of 10 Hz. Emissions for all regulated pollutants must be calculated and reported for each test speed condition in terms of g/bhp-hr.

(4) Data must be collected beginning with the start of the transition from the minimum NTE control area load to the full fuel position. Data must be collected until the end of the (final if repeated) 6 second operational period at the minimum NTE control area load described in paragraph (c)(1) of this section. Good engineering practice must be used to ensure that the sampling time is properly aligned with the engine operation.

[65 FR 59963, Oct. 6, 2000]

Subpart O—Emission Regulations for New Gasoline-Fueled Otto-Cycle Light-Duty Vehicles and New Gasoline-Fueled Otto-Cycle Light-Duty Trucks; Certification Short Test Procedures

SOURCE: 58 FR 58426, Nov. 1, 1993, unless otherwise noted.

§ 86.1401 Scope; applicability.

(a) This subpart contains CST procedures for gasoline-fueled Otto-cycle light-duty vehicles, and for gasoline-fueled Otto-cycle light-duty trucks, including those certified to operate using both gasoline and another fuel (for example, ''flexible-fuel'' or ''dual-fuel'' light-duty vehicles and light-duty trucks). For the purposes of the Certification Short Test, flexible-fuel or dual-fuel vehicles will be treated as dedicated gasoline vehicles. This subpart applies to 1996 and later mode years.

(b) References in this subpart to engine families and emission control systems shall be deemed to refer to durability groups and test groups as applicable for manufacturers certifying new light-duty vehicles and light-duty trucks under the provisions of subpart S of this part.

[64 FR 23922, May 4, 1999]

§ 86.1402 Definitions.

The definitions in § 86.096–2 apply to this subpart.

§ 86.1403 Abbreviations.

The abbreviations in § 86.096–3 apply to this subpart.

§ 86.1404 [Reserved]

§ 86.1405 Introduction; structure of subpart.

(a) This subpart describes equipment and the procedures required to perform the CST on gasoline-fueled Otto-cycle light-duty vehicles and gasoline-fueled Otto-cycle light-duty trucks (including those certified to operate using both gasoline and another fuel). Subpart A of this part sets forth the testing requirements, reporting requirements and test intervals necessary to comply with EPA certification procedures, subpart G of this part sets forth the requirements for Selective Enforcement Auditing of light-duty vehicles, subpart H of this part sets forth the standards for in-use testing, subpart K of this part sets forth the requirements for Selective Enforcement Auditing of light-duty trucks, and part 85, subpart W of this chapter sets forth the testing requirements for inspection and maintenance testing (which also may be utilized as part of the CST as defined in this subpart).

(b) Three topics are addressed in this subpart. Sections 86.1406 through 86.1413 set forth specifications and equipment requirements; §§ 86.1416 through 86.1426 discuss calibration methods and frequency; and test procedures and data requirements are described in §§ 86.1427 through 86.1442.

§ 86.1406 Equipment required and specifications; overview.

(a) *Exhaust emission tests.* All vehicles subject to this subpart are tested for exhaust emissions.

(1) *Dynamometer.* (i) When a CST employs steady state loaded operation, the dynamometer must be adjusted to the lowest available inertia weight setting and must meet the load speed relationships described in § 86.1439(d). When a CST employs transient loaded warmup operation or loaded preconditioning, the dynamometer must be adjusted to the power absorption unit and inertia weight settings as described in § 86.129 of this part.

(ii) All other requirements of this paragraph are set forth in §§ 85.2230 and 85.2233 of this chapter.

(2) *Exhaust gas analysis system.* (i) The requirements for the exhaust gas analysis system are set forth in §§ 85.2225 and 85.2233 of this chapter, except that the NO channel is optional. For the purposes of the CST, non-dispersive infrared analyzers are specified for measuring emissions.

(ii) If desired, the line extending between the sample probe and the analyzer may be insulated to minimize condensation.

(b) *Fuel and analytical tests.* Fuel requirements for the CST are specified in §§ 86.113, 86.213, and 86.1413.

[58 FR 58426, Nov. 1, 1993; 59 FR 33913, July 1, 1994]

§§ 86.1407–86.1412 [Reserved]

§ 86.1413 Fuel specifications.

(a) The test fuel to be used for the CST test options described in tables O–96–1 and O–96–2 of § 86.1430(b) must conform to the specifications listed in paragraph (b) of this section except that for manufacturer data submittal testing for the purposes of obtaining a certificate of conformity and for Selective Enforcement Audit testing, the octane specification of the fuels does not apply. For all gasoline-fueled Otto-cycle light-duty vehicles and gasoline-fueled Otto-cycle light-duty trucks (including those certified to operate using both gasoline fuel and another fuel), CST procedures performed for the purpose of obtaining a certificate of conformity must be conducted using the appropriate gasoline fuel only, as indicated in paragraph (b) of this section.

(b) *CST test fuels by option.* (1) Test Option 1: Use Cold CO fuel as specified in the table in § 86.213–94.

(2) Test Option 2: Use Cold CO fuel, as specified in the table in § 86.213–94; optionally, the Administrator may substitute Otto-cycle test fuel, as described in § 86.113–94(a)(1).

(3) Test Option 3: Use Otto-cycle test fuel as specified in the table in § 86.113–94(a)(1).

§§ 86.1414–86.1415 [Reserved]

§ 86.1416 Calibration; frequency and overview.

(a) Calibrations are performed as specified in § 85.2233 of this chapter, with the exception that the calibrations performed at 72 hour intervals in § 85.2233(e) of this chapter are instead performed prior to each CST.

(b) At least monthly, or after any maintenance which could alter calibration, the calibration of the analyzer must be checked. The analyzer must be adjusted or repaired as necessary.

(c) Water traps, filters, and conditioning columns must be checked before each test, and adjusted, repaired or replaced as necessary.

(d) Other equipment used for testing must be calibrated as often as necessary in accordance with good engineering practice.

§§ 86.1417–86.1421 [Reserved]

§ 86.1422 Analyzer calibration.

(a) Determine that the analyzer has met the acceptance criteria specified in § 85.2225 of this chapter.

(b) *Initial and periodic check.* Prior to its introduction into service and at specified periods thereafter, the analyzer must receive calibration in accordance with § 85.2233 of this chapter and with good engineering practice.

§§ 86.1423–86.1426 [Reserved]

§ 86.1427 Certification Short Test procedure; overview.

(a) The test procedure described in this subpart is designed to measure raw concentrations of CO (percent) and HC (parts per million) in the exhaust flow under conditions and test modes that may be encountered in the conduct of the Emission Control System Performance Warranty Short Tests, described in part 85, subpart W of this chapter. Emission sampling may occur during idle, 2500 rpm, and loaded modes. Specific conditions defined by this test procedure include fuel characteristics, ambient temperature, and waiting periods prior to being tested.

(b) *Testing by the manufacturer for certification data submittal.* (1) The options provided for testing under this subpart include a cold temperature test with Cold CO fuel, a moderate temperature test with Cold CO fuel, and a warm temperature test with FTP Otto-cycle test fuel, as described in table O–96–1 of § 86.1430. The manufacturer must complete testing for the data submittal (as required by the provisions of § 86.096–23(c)) under a minimum of one of these scenarios.

(2) In addition to testing under one of the sets of conditions specified in this subpart, the manufacturer may optionally test under conditions outside the ranges specified in this subpart.

(c) *Testing by the Administrator.* The Administrator reserves the right to conduct testing in accordance with the test procedures described in § 86.1439, under test conditions within the ranges specified in this subpart. The options provided for testing under this subpart include a cold temperature test with Cold CO fuel, a moderate temperature

test with Cold CO fuel, a moderate temperature test with Otto-cycle test fuel, and a warm temperature test with Otto-cycle test fuel, as described in table O–96–2 of § 86.1430. In order for an engine family to be eligible for certification, each of its test vehicles that is subjected to one or more CSTs must obtain a passing result for each combination of fuel, temperature, and test procedure employed in those CSTs, subject to the Administrator's discretion.

(d) *Alternative test procedures and exemptions.* (1) The manufacturer may request an exemption from any specific test(s) described in § 86.1439 for any engine family for which the specific test(s) is not appropriate. The requester will supply relevant test data and technical support to substantiate the request for an Administrator-granted exemption.

(2) The manufacturer may request alternative test procedures for any engine family for which none of the test procedures described in § 86.1439 is appropriate. The alternative test procedure(s) must be approved in advance by the Administrator in accordance with the provisions of § 85.2208 of this chapter.

(3) If the manufacturer does not submit a written application for use of alternative test procedures or for exemptions from specific test procedures described in § 86.1439 but the Administrator determines that an engine family is not susceptible to satisfactory testing by the procedures set forth in this part, the Administrator shall notify the manufacturer in writing and set forth the reasons for such rejection in accordance with the provisions of § 86.090–22(c).

(4) The emission control information label for any vehicle for which approval of exemptions or alternative test procedure(s) has been granted must note such approval, in accordance with § 86.096–35, in order for the exemptions or alternative procedures to be effective for that vehicle.

§§ 86.1428–86.1429 [Reserved]

§ 86.1430 Certification Short Test sequence; general requirements.

(a) The following sequence lists the major steps encountered during the CST. These steps are described in paragraph (b) of this section and in §§ 86.1432, 86.1437, 86.1438, and 86.1439. Testing conducted for the manufacturer's data submittal must be in accordance with the provisions of §§ 86.096–23 and 86.1442.

(1) *Test conditions and procedures.* (i) *Manufacturer's data submittal.* Test conditions must be selected from table O–96–1 of paragraph (b) of this section. Further, the vehicle preparation and test run must be those described in §§ 86.1432 and 86.1437. Figure O96–1 shows the steps encountered as the test vehicle undergoes the procedures subsequently described.

FIGURE O96-1
MANUFACTURER CST DATA SUBMITTAL REQUIREMENTS

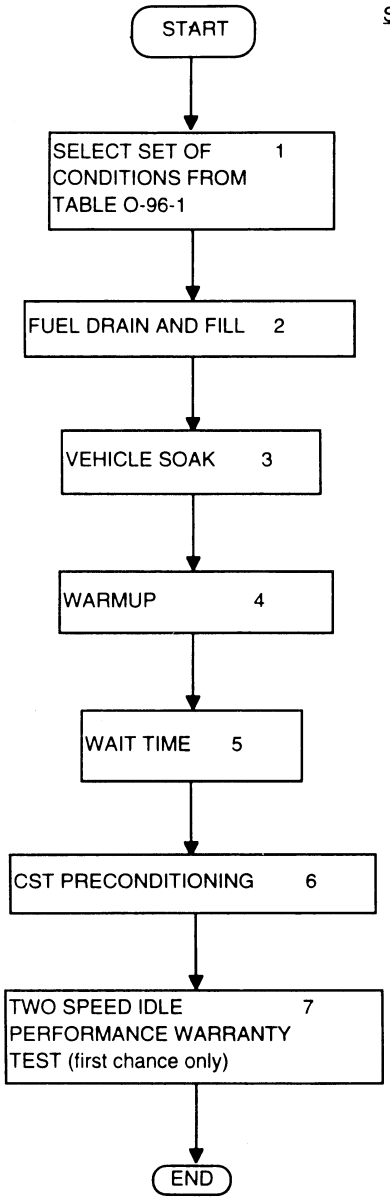

STEP #	NOTE
1	• fuel type • ambient temperature
2	• If cold ambient temp. is selected in Step 1, a manufacturer may elect to run a Cold CO test procedure in lieu of Steps 2, 3 & 4
3	• 0-36 hour soak
4	• partial UDDS (505 secs.) • Warmup not performed if Cold CO test procedure is followed by no soak
5	• 25-30 minute idle • 0-6 engine off/restart cycles
6	• 25-30 seconds at either 2500±300 rpm OR 30-50 mph • Vehicle must attain allowable rpm or mph range in ≤ 10 seconds
7	• Standards: certification 100 ppm HC 0.5% CO SEA 100 ppm HC 0.5% CO recall 220 ppm HC 1.2% CO

(ii) *Testing by the Administrator*. Test conditions are selected from among the set of conditions in table O–96–2 of paragraph (b) of this section. Further, one or more CST(s) are performed in accordance with the provisions of §§ 86.1432, 86.1438, and 86.1439. Figure O96–2 shows the steps encountered as the test vehicle undergoes the procedures subsequently described.

FIGURE O96-2
EPA CST COMPLIANCE TESTING REQUIREMENTS

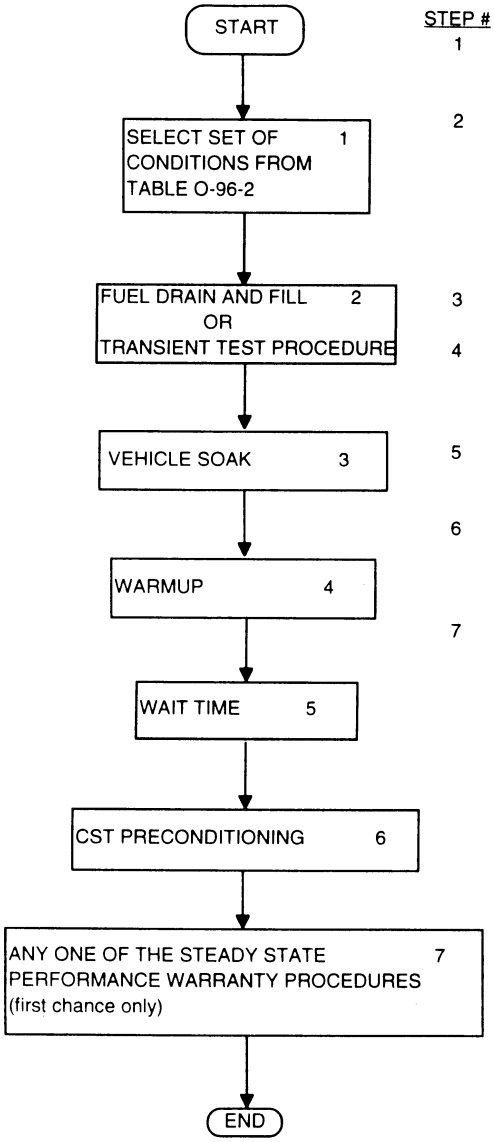

STEP #	NOTE
1	• fuel type • ambient temperature
2	• Transient test procedure may be: Cold CO test procedure, or Federal Test Procedure (excluding evaporative emissions testing) and/or Highway Fuel Economy Test Procedure
3	• 0-36 hour soak
4	• Partial UDDS (≥505 secs.). • Warmup not performed if transient is followed by no soak
5	• 3-30 minute idle • 0-6 engine off/restart cycles
6	• Minimum of 30 seconds at either 2500±300 rpm OR 30-50 mph
7	• Standards: certification 100 ppm HC 0.5% CO SEA 100 ppm HC 0.5% CO recall 220 ppm HC 1.2% CO

(2) *Fuel tank drain and refill, or transient test procedure.* Fuel tank drain and fill is performed or a transient test procedure is performed, as described in §86.1432(b).

(3) *Soak*. A soak lasting up to 36 hours in duration may optionally be performed as specified in § 86.1432(c).

(4) *Warmup operation*—(i) *Manufacturer's data submittal*. The test vehicle may optionally be administered the first 505 seconds of the Urban Dynamometer Driving Schedule (UDDS), as described in § 86.1432(d)(1). If the test vehicle was subjected to a Cold CO Test Procedure in lieu of the steps listed in paragraphs (a) (2) through (4) of this section, it will not receive a warmup.

(ii) *Testing by the Administrator*. (A) If the test vehicle has not been subjected to a transient loaded test procedure as permitted in § 86.1432(b)(2) prior to the wait time, or if the vehicle has undergone a soak period exceeding 60 seconds, the test vehicle must be administered, at minimum, the first 505 seconds of the UDDS, as described in § 86.1432(d)(2).

(B) If the test vehicle is exposed to ambient temperatures outside of the specified temperature range between an initial test and a retest, it will receive a full UDDS, as described in § 86.1438.

(5) *Wait time*—(i) *Manufacturer's data submittal*. A 25 to 30 minute vehicle wait time of free idle, with optional engine off/restart cycles, must be performed as specified in § 86.1437(b).

(ii) *Testing by the Administrator*. A three to 30 minute vehicle wait time of free idle with optional engine off/restart cycles must be performed as specified in § 86.1438(b).

(6) *Preconditioning*—(i) *Manufacturer's data submittal*. Optional preconditioning consisting of 2500 rpm (±300 rpm) idle operation or loaded operation at 30 mph to 50 mph (48 kph to 80 kph) may be performed for 25 to 30 seconds as specified in § 86.1437(c).

(ii) *Testing by the Administrator*. Preconditioning consisting of 2500 rpm (±300 rpm) idle operation or loaded operation at 30 mph to 50 mph (48 kph to 80 kph) must be performed for a minimum of 30 seconds as specified in § 86.1438(c).

(7) *Test procedure*—(i) *Manufacturer's data submittal*. The test procedure consists of the Two Speed Idle Test (first chance only), which is performed as specified in § 86.1437 (e) through (g).

(ii) *Testing by the Administrator*. The Administrator will perform one or more test procedures described in § 86.1439. For recall program testing, in-use vehicles will be set to the manufacturer's specifications, if appropriate.

(b) The sets of test conditions identified in this subpart are based on the test fuel type present in the vehicle fuel tank and the ambient temperature during the test. Tables O–96–1 and O–96–2 outline the specific ranges of conditions to be employed in the CST. The manufacturer must perform the CST described in this subpart under at least one of the three sets of conditions shown in table O–96–1 for data submittal under the provisions of § 86.096–23. The set of conditions selected is the one that, in the manufacturer's best judgment, represents the worst case, meaning the highest probability that the test vehicle would fail.

TABLE O—96–1—SETS OF CONDITIONS TO BE EMPLOYED FOR MANUFACTURER'S DATA SUBMITTAL IN THE CST

	Test Option 1	Test Option 2	Test Option 3
	Cold Temperature	Moderate Temperature	Warm Temperature
Fuel Type	Cold CO fuel (see table in § 86.213–94).	Cold CO fuel (see table in § 86.213–94).	Otto-cycle test fuel (see table in § 86.113–94(a)(1))
Ambient temperature	15 °F—25 °F (−9 °C—−4 °C)	68 °F—86 °F (20 °C—30 °C)	86 °F—96 °F (30 °C—36 °C)

TABLE O—96–2—SETS OF CONDITIONS TO BE EMPLOYED BY THE ADMINISTRATOR IN THE CST

	Test Option 1	Test Option 2	Test Option 3
	Cold Temperature	Moderate Temperature	Warm Temperature
Fuel Type	Cold CO fuel (see table in § 86.213–94).	Otto-cycle test fuel or Cold CO fuel (see table in § 86.113–94(a)(1) or in § 86.213–94).	Otto-cycle test fuel (see table in § 86.113–94)

TABLE O—96–2—SETS OF CONDITIONS TO BE EMPLOYED BY THE ADMINISTRATOR IN THE CST—Continued

	Test Option 1	Test Option 2	Test Option 3
	Cold Temperature	Moderate Temperature	Warm Temperature
Ambient temperature	15 °F—25 °F (−9 °C—−4 °C)	68 °F—86 °F (20 °C—30 °C) ...	86 °F—96 °F (30 °C—36 °C)

(c) For testing conducted in accordance with this subpart, the ambient temperature to which the test vehicle is exposed must not fall outside the range specified in this paragraph.

(1) *For the cold temperature compliance pathways*—(i) *For the manufacturer's data submittal*. The ambient temperature for the steps following the fuel drain and fill or transient test procedure must remain between 15 °F and 25 °F (between −9 °C and −4 °C).

(ii) *For testing by the Administrator*. The ambient temperature for the remainder of the compliance pathway beginning with the step following the fuel drain and fill must remain between 15 °F and 68 °F (between −9 °C and 20 °C). In addition, from the warmup operation step (if performed) or the wait time step forward through the remainder of the CST, the ambient temperature must be maintained within ±5 °F (3 °C) of the selected ambient temperature of the CST.

(2) *For the moderate and warm temperature compliance pathways*—(i) *For the manufacturer's data submittal*. The ambient temperature for the steps preceding the warmup operation (if performed) or the wait time (if no warmup is performed) must remain within the specific ambient temperature range selected for the CST, that is, either moderate or warm, as specified in table O–96–1.

(ii) *For testing by the Administrator*. The ambient temperature for the steps preceding the warmup operation (if performed) or the wait time (if no warmup is performed) must remain between 68 °F and 96 °F (between 20 °C and 36 °C), except as provided in paragraph (c)(3) of this section.

(iii) The warmup operation (if performed) and the entire test run from the wait time forward, as described in § 86.1437 or § 86.1438, must remain within the specific ambient temperature range selected for the CST, that is, either moderate or warm, as specified in tables O–96–1 and O–96–2.

(3) *For testing by the Administrator only*. If Cold CO fuel is selected in conjunction with the moderate temperature compliance pathway, the specific provisions described in paragraphs (c)(3) (i) and (ii) of this section apply.

(i) The ambient temperature must be maintained within the moderate temperature range, as specified in table O–96–2, from the drain and fuel step forward throughout the remainder of the compliance pathway.

(ii) The ambient temperature of the test cell may not exceed 80 °F (27 °C) for the warmup operation (if performed) nor for the entire test run from the wait time forward, as described in §§ 86.1438 and 86.1439.

(d) If the engine stalls at any time during the test run, the CST is void unless the stall falls during the wait time within the guidelines for engine off time described in § 86.1437 (b) and (d) and § 86.1438(d)(1)(i).

[58 FR 58426, Nov. 1, 1993; 59 FR 33913, July 1, 1994]

§ 86.1431 [Reserved]

§ 86.1432 Vehicle preparation.

(a) The test conditions to be employed in the CST procedure must be selected from the applicable options specified in table O–96–1 or table O–96–2 of § 86.1430(b). The fuel tank must be fitted, as required, to accommodate a fuel drain at the lowest point possible in the tank(s) as installed on the vehicle.

(b) *Fuel tank drain and fill, or transient test procedure*—(1) *CST performed as a stand-alone procedure*. For the first CST compliance pathway performed as a stand-alone procedure on a particular test vehicle, the fuel tank(s) must be filled to approximately the prescribed ''tank fuel volume'' (as defined in § 86.082–2) with the specified test fuel.

For the cold temperature compliance pathway, the temperature of the fuel prior to its delivery to the fuel tank must be less than or equal to 60 °F (16 °C). If the existing fuel in the fuel tank(s) does not meet the specifications contained in § 86.1413 and § 86.1430(b), the existing fuel must be drained prior to the fuel fill as specified above. Other refueling during a CST may not be performed. Draining and refueling between successive CSTs is allowed and is required prior to any CST for which the specified fuel is different than that existing in the tank(s). Any soak or operation that follows this step, until the conclusion of the CST sequence, must occur at an ambient temperature that is within the allowable temperature range described in § 86.1430(c).

(2) *CST performed in sequence with other confirmatory testing*. Certain complete confirmatory test procedures, as indicated in paragraphs (b)(2) (i) and (ii) of this section, may be substituted for the vehicle preparation steps described in paragraph (b)(1), (c), and (d) of this section. If the vehicle is to be subjected to one or more of these other confirmatory test procedures, the vehicle is prepared in accordance with the applicable complete procedures from the point of fuel drain and fill.

(i) *Manufacturer's data submittal*. The only test procedure that the manufacturer may select to substitute for paragraphs (b)(1), (c)(1), and (d)(1) of this section for the purposes of its data submittal is the Cold CO Test Procedure, performed in accordance with subpart C of this part.

(ii) *Testing by the Administrator*. The complete confirmatory test sequences that the Administrator may select to substitute for paragraph (b)(1) of this section are listed in paragraphs (b)(2)(ii) (A) through (C) of this section.

(A) Federal Test Procedure for exhaust emissions (except when performing evaporative test sequence) or for fuel economy testing, in accordance with subpart B of this part.

(B) Highway Fuel Economy Test Procedure, in accordance with part 600 of this chapter (which must follow a Federal Test Procedure).

(C) Cold CO Test Procedure, in accordance with subpart C of this part.

(c) *Soak*—(1) *Manufacturer's data submittal*. A vehicle soak prior to the wait time is optional if the CST sequence is performed as a stand-alone procedure. If the manufacturer elects to perform a Cold CO Test Procedure in conjunction with the CST as permitted in paragraph (b)(2) of this section, the soak and subsequent warmup are not conducted, and instead the procedure must move directly to the wait time step described in § 86.1437(b). If the test vehicle undergoes a soak period, it must be maintained at an ambient temperature within the temperature range specified in § 86.1430(c), for a period not to exceed 36 hours in duration, except as provided in paragraph (d)(1) of this section. Ambient temperature during soak periods must remain within the appropriate temperature range for the selected test option.

(2) *Testing by the Administrator*. (i) The test sequence may proceed directly to the wait time step described in § 86.1438(b) within 60 seconds of the end of vehicle operation conducted in accordance with paragraph (b)(2) of this section.

(ii) Optionally, the test vehicle may soak at an ambient temperature within the temperature range specified in § 86.1430(c), for a period up to 36 hours in duration, except as provided in paragraph (d)(2) of this section. If the Administrator opts to soak the test vehicle, warmup operation must be performed as described in paragraph (d)(2) of this section.

(d) *Warmup operation*—(1) *Manufacturer's data submittal*. Warmup operation is optional. Warmup consists of loaded operation over the first 505 seconds of the UDDS (in accordance with § 86.115 and appendix I to this part), or optionally, if the soak period has exceeded 36 hours, a full UDDS. Warmup operation must occur within the specific ambient temperature range for the selected test option, as given in table O–96–1 of § 86.1430.

(2) *Testing by the Administrator*. Warmup operation is performed if no transient operation of the type specified in § 86.1432(b)(2) is performed prior to the wait time, or if the optional soak exceeds 60 seconds. Warmup operation consists of, at a minimum, loaded operation over the first 505 seconds of

the UDDS (in accordance with § 86.115 and appendix I to this part), or, if the soak period has exceeded 36 hours, a full UDDS. Warmup operation must occur within the specific ambient temperature range for the selected test option, as given in table O–96–2 of § 86.1430, except as specified in paragraphs (e)(2)(i) and (ii) of this section. Warmup operation must proceed immediately to the wait time step at § 86.1438(b).

(i) For moderate temperature testing utilizing Cold CO fuel only, the ambient temperature may not exceed 80 °F (27 °C) during warmup operation, or any of the succeeding steps in the CST sequence.

(ii) For the cold temperature pathway only, warmup operation must occur not only within the specific ambient temperature range indicated in table O–96–2 of § 86.1430, but must also occur within 5 °F (3 °C) of the selected test temperature.

§ 86.1433 [Reserved]

§ 86.1434 Equipment preparation.

(a) Immediately prior to the wait time portion of the test run described in § 86.1437 or § 86.1438, or immediately prior to warmup operation, the steps described in paragraphs (b) through (d) of this section must be performed.

(b) Check the device(s) for removing water from the exhaust sample and the sample filter(s). Remove any water from the water trap(s). Clean and replace the filter(s) as necessary.

(c) Set the zero and span points of the analyzer with the electrical spanning network or with analytical gases.

(d) Attach the tachometer to the vehicle in accordance with the analyzer manufacturer's instructions. The manufacturer must ensure, for all test and production vehicles and engines, that the rpm signal is capable of being read by an exhaust gas analyzer via:

(1) A conventional inductive tachometer; or

(2) The onboard diagnostics (OBD) connector, as described under the provisions of § 86.094–17; or

(3) A dedicated electrical lead, marked ''rpm'' and located under the hood, with a female-type, quarter-inch spade terminal. The digital transistor-transistor logic (TTL) signal must span the 0V–5V range at a rate of one pulse per engine revolution, synchronized to the top dead center position.

§§ 86.1435–86.1436 [Reserved]

§ 86.1437 Test run—manufacturer.

(a) This section describes the test run performed by the manufacturer for its data submittal pursuant to obtaining a certificate of conformity under the provisions of § 86.096–23. The test run consists of the wait time, vehicle preconditioning (optional), and the selected test procedure. The entire test run is performed in accordance with the conditions in the option selected from table O–96–1 of § 86.1430.

(b) *Wait time.* (1) If the vehicle is not already idling, the vehicle is started and allowed to idle freely with the transmission in neutral. The vehicle wait time begins when the vehicle engine speed is between 350 and 1100 rpm. The engine speed must attain the specified idle speed within ten seconds of beginning the idle period. A timer for the wait time portion of the test run will initiate (wt=0) when the vehicle is turned on or when it returns to idle after any transient test procedure, as described in § 86.1432.

(2) Following the first three minutes of idle, this wait time may be interrupted by engine off/restart cycles occurring no more frequently than every five minutes, with each engine off period having a maximum duration of two minutes. Each period of idle following a restart must be a minimum of three minutes in duration. During each idle period, the engine speed must not exceed 1100 rpm or fall below 350 rpm for more than five seconds in any one excursion. The total duration of the wait time, including time at idle and time during engine off periods, is 25 to 30 minutes.

(c) *Optional preconditioning.* Immediately following the wait time, the engine speed is increased to 2500±300 rpm for 25 to 30 seconds or, optionally, the vehicle will undergo loaded operation for a minimum of 30 seconds between the speeds of 30 and 50 mph (48 to 80 kph). The period allowed for preconditioning commences upon attaining the specified rpm or speed range. No more

than ten seconds may elapse between terminating the wait time and attaining the specified rpm or speed range for preconditioning.

(d) Immediately following the wait time, described in paragraph (b) of this section, or, if performed, the optional preconditioning described in paragraph (c), the test procedure as described in paragraphs (e) through (g) of this section is performed on the test vehicle. The general requirements described in paragraphs (d) (1) through (4) of this section apply.

(1) *Exhaust gas sampling algorithm.* The analysis of exhaust gas concentrations begins ten seconds after the applicable test mode begins. Exhaust gas concentrations must be analyzed at a minimum rate of once every 0.75 second. The measured value for pass/fail determinations is a simple running average of the measurements taken over five seconds.

(2) *Void test conditions.* The test immediately terminates and any exhaust gas measurements are voided if the measured concentration of CO plus CO_2 falls below six percent or the vehicle's engine stalls at any time during the test sequence.

(3) *Multiple exhaust pipes.* Exhaust gas concentrations from vehicle engines equipped with multiple exhaust pipes must be sampled simultaneously.

(4) *Pass/fail determination.* A pass or fail determination is made for each applicable test mode based on a comparison of the short test standards contained in § 86.096–8(a) for light-duty vehicles and in § 86.096–9(a) for light-duty trucks, and the measured value for HC and CO as described in paragraph (d)(1) of this section. A vehicle passes the test mode if any pair of simultaneous values for HC and CO are below or equal to the applicable short test standards.

(e) *Test sequence—general requirements.* (1) The test sequence consists of an idle mode followed by a high-speed mode. The test timer starts when the conditions specified in this paragraph are met. The overall maximum test time is 290 seconds (tt=290). The test terminates immediately upon reaching the overall maximum test time. A vehicle that has not yielded passing results by the expiration of the overall test time fails the test.

(2) The test sequence begins only after the requirements described in paragraphs (e)(2) (i) and (ii) of this section are met. If these conditions are not met within one minute upon completion of the wait time or, if performed, the preconditioning, the CST must be aborted.

(i) The vehicle is tested with the transmission in neutral or park and all accessories turned off. The engine must be at normal operating temperature (as indicated by a temperature gauge, temperature lamp, touch test on the radiator hose, or other visual observation indicating that overheating has not occurred).

(ii) The tachometer must be attached to the vehicle in accordance with the analyzer manufacturer's instructions.

(iii) The sample probe is inserted into the tailpipe to a minimum depth of 10 inches. If the vehicle's exhaust system prevents insertion to this depth, a tailpipe extension must be used, or the probe may be inserted into the tailpipe to CVS connector through an aperture provided for this purpose.

(iv) The measured concentration of CO plus CO_2 must be greater than or equal to six percent.

(f) *Idle mode.* (1) The mode timer starts (mt=0) when the vehicle engine speed is between 350 and 1100 rpm. If engine speed exceeds 1100 rpm or falls below 350 rpm, the mode timer resets to zero and resumes timing. The minimum mode time is 30 seconds. The maximum idle mode length is 90 seconds elapsed time (mt=90).

(2) The pass/fail analysis begins after an elapsed time of ten seconds (mt=10). A pass or fail determination is made for the vehicle and the mode terminated as described in paragraphs (f)(2) (i) through (iii) of this section.

(i) The vehicle passes the idle mode and the mode is terminated at the end of an elapsed time of 30 seconds (mt=30) if the measured values are less than or equal to the applicable short test standards as described in paragraph (d)(4) of this section.

(ii) The vehicle passes the idle mode and the mode is immediately terminated if, at any point between an elapsed time of 30 seconds (mt=30) and

90 seconds (mt=90), the measured values are less than or equal to the applicable short test standards as described in paragraph (d)(4) of this section.

(iii) The vehicle fails the idle mode and the test is terminated if none of the provisions of paragraphs (f)(2) (i) and (ii) of this section is met by an elapsed time of 90 seconds (mt=90).

(g) *High-speed mode*. This mode follows immediately upon termination of the idle mode.

(1) The mode timer resets (mt=0) when the vehicle engine speed is between 2200 and 2800 rpm. If engine speed falls below 2200 rpm or exceeds 2800 rpm for more than two seconds in one excursion, or more than six seconds over all excursions within 30 seconds of the final measured value used in pass/fail determination, the measured value is invalidated and the mode continued. If any excursion lasts for more than ten seconds, the mode timer resets to zero (mt=0) and timing resumes. The minimum high-speed mode length is determined as described in paragraph (g)(2) of this section. The maximum high-speed mode length is 90 seconds elapsed time (mt=90).

(2) The pass/fail analysis begins after an elapsed time of ten seconds (mt=10). A pass or fail determination is made for the vehicle and the mode terminated as described in paragraphs (g)(2)(i) through (iii) of this section.

(i) The vehicle passes the high-speed mode and the mode is terminated at the end of an elapsed time of 30 seconds (mt=30) if the measured values are less than or equal to the applicable short test standards as described in paragraph (d)(4) of this section.

(ii) The vehicle passes the high-speed mode and the mode is immediately terminated if, at any point between an elapsed time of 30 seconds (mt=30) and 90 seconds (mt=90), the measured values are less than or equal to the applicable short test standards as described in paragraph (d)(4) of this section.

(iii) The vehicle fails the high-speed mode and the test is terminated if none of the provisions of paragraphs (g)(2) (i) and (ii) of this section is met by an elapsed time of 90 seconds (mt=90).

[58 FR 58426, Nov. 1, 1993; 59 FR 33913, July 1, 1994]

§ 86.1438 Test run—EPA.

(a) This section describes the test run performed by the Administrator for confirmatory testing pursuant to issuing a certificate of conformity under the provisions of § 86.091–29. The Administrator may also employ this procedure for Selective Enforcement Audit and recall purposes. For recall program testing, in-use vehicles will be set to manufacturer's specifications prior to conduct of the CST. The test run consists of the wait time, vehicle preconditioning, and the selected test procedure. The test run is performed in accordance with the conditions in the option selected from table O–96–2 of § 86.1430. If the CST is performed in conjunction with other confirmatory testing in accordance with § 86.1432(b)(2) and (c)(2), the vehicle must undergo the CST at the same specified ambient temperature range as that of the other confirmatory testing performed immediately prior to the optional vehicle soak, except as specified in paragraphs (a) (1) and (2) of this section.

(1) If the transient confirmatory testing was performed at the moderate temperature range specified in § 86.1430 and utilized Otto-cycle test fuel, it may optionally be followed by a CST sequence as described in § 86.1432 (b) and (c) at the warm ambient temperature range.

(2) If the transient confirmatory testing was performed at the moderate temperature range specified in § 86.1430 and utilized Cold CO test fuel, it may optionally be followed by a CST sequence as described in § 86.1432 (b) and (c) at the moderate ambient temperature range, except that if the ambient temperature exceeds 80 °F (27 °C) at any point for the remainder of the sequence from the wait time forward, a non-passing test result renders the test void.

(b) *Wait time*. (1) If the vehicle is not already idling, the vehicle is started and allowed to idle freely with the transmission in neutral. The vehicle wait time begins when the vehicle engine speed is between 350 and 1100 rpm. The specified idle speed range must be attained within ten seconds of beginning the idle operation. A timer for the wait time portion of the test run will initiate (wt=0) when it returns to idle

after any transient operation that occurs immediately prior to the wait time, as described in § 86.1432, or when the vehicle is restarted after being shut off prior to the wait time.

(2) Following the first three minutes of idle, this wait time may be interrupted by vehicle engine off/restart cycles occurring no more frequently than every five minutes, with each engine off period having a maximum duration of two minutes. Each period of idle following a restart must be a minimum of three minutes in duration. During each idle period, the engine speed must not exceed 1100 rpm or fall below 350 rpm for more than five seconds in any one excursion, except during the allowable engine-off periods. The total duration of the wait time, including time at idle and time during engine off periods, is three to 30 minutes.

(c) *Preconditioning*. Immediately following the wait time, the vehicle is preconditioned by increasing engine speed to 2500 ±300 rpm for a minimum of 30 seconds, or, optionally, the vehicle will undergo loaded operation for a minimum of 30 seconds between the speeds of 30 and 50 mph (48 to 80 kph).

(d) Immediately following the preconditioning described in paragraph (c) of this section, the test procedure as described in paragraphs (e) through (g) of this section is performed on the test vehicle. When the CST—Loaded Test as described in § 86.1439(d) is selected, the appropriate changes to dynamometer power absorption and inertia weight settings must be completed and the test sequence resumed as soon as possible following completion of preconditioning. The general requirements described in paragraphs (d) (1) through (4) of this section apply.

(1) *Exhaust gas sampling algorithm*. The analysis of exhaust gas concentrations begins ten seconds after the applicable test mode begins. Exhaust gas concentrations must be analyzed at a minimum rate of once every 0.75 second. The measured value for pass/fail determinations is a simple running average of the measurements taken over five seconds.

(2) *Void test conditions*. The test immediately terminates and any exhaust gas measurements are voided if the measured concentration of CO plus CO_2 falls below six percent or the vehicle's engine stalls at any time during the test sequence.

(3) *Multiple exhaust pipes*. Exhaust gas concentrations from vehicle engines equipped with multiple exhaust pipes must be sampled simultaneously.

(4) *Pass/fail determination*. For certification and Selective Enforcement Audit testing, a pass or fail determination is made for each applicable test mode based on a comparison of the measured value for HC and CO as described in paragraph (d)(1) of this section with the short test standards contained in § 86.096–8(a) for light-duty vehicles or in § 86.096–9(a) for light-duty trucks. For recall testing, a pass or fail determination is made for each applicable test mode based on a comparison of the measured value for HC and CO as described in paragraph (d)(1) of this section with the short test standards contained in § 86.708(a) for light-duty vehicles or in § 86.709(a) for light-duty trucks. A vehicle passes the test mode if any pair of simultaneous values for HC and CO are below or equal to the applicable short test standards.

(e) *Test sequence—general requirements*. The test timer starts only after the requirements described in paragraphs (e) (1) through (4) of this section are met. If these conditions are not met within one minute upon completion of the preconditioning, the CST must be aborted.

(1) The vehicle is tested with the transmission in neutral or park and all accessories turned off. The engine must be at normal operating temperature (as indicated by a temperature gauge, temperature lamp, touch test on the radiator hose, or other visual observation indicating that overheating has not occurred).

(2) The tachometer must be attached to the vehicle in accordance with the analyzer manufacturer's instructions.

(3) The sample probe is inserted into the tailpipe to a minimum depth of 10 inches. If the vehicle's exhaust system prevents insertion to this depth, a tailpipe extension must be used, or the probe may be inserted into the tailpipe to CVS connector through an aperture provided for this purpose.

(4) The measured concentration of CO plus CO_2 must be greater than or equal to six percent.

(f) When the requirements listed in paragraph (e) of this section have been satisfied, the procedure selected by the Administrator from among the emission tests described in § 86.1439 is performed on the test vehicle in accordance with the conditions prescribed in this section and §§ 86.1430 and 86.1432.

(g) If a certification test vehicle fails its initial confirmatory CST, a retest must be given in accordance with the provisions of § 86.091–29(a)(3)(iii)(B)(*1*) unless the manufacturer withdraws the vehicle from the certification process.

(1) A vehicle receiving a retest must re-enter the confirmatory pathway at either:

(i) The soak time step, as described in § 86.1432, or

(ii) The drain and fill step preceding the soak time option, as described in § 86.1432(b)(1), using the same type of fuel as was used in the initial CST. The vehicle may optionally be filled to the specified level defined in § 86.082 without being drained.

(2) A vehicle receiving a retest must either:

(i) Be maintained in the same ambient temperature range as that specified for the initial confirmatory CST (as described in § 86.1430(c)) from the termination of the initial confirmatory CST throughout the retest, or,

(ii) If the vehicle is exposed to ambient temperatures outside of the specified temperature range, before it enters the wait time it must be given a warmup consisting of a full Urban Dynamometer Driving Schedule procedure at the specified ambient temperature range for the initial CST. The test vehicle will be maintained at the same ambient temperature range as that specified for the initial confirmatory CST from this step throughout the remainder of the retest.

(h) *Multiple CSTs.* The Administrator may elect to conduct more than one type of CST on a test vehicle.

(1) If the Administrator elects to change fuels between one CST and a subsequent CST, the subsequent CST initiates at the drain and fill step described in § 86.1432(b)(1).

(2) If the Administrator elects to utilize the same fuel between one CST and a subsequent CST other than a retest, the Administrator may optionally initiate the subsequent CST at the vehicle soak step specified in § 86.1432(d).

[58 FR 58426, Nov. 1, 1993; 59 FR 33913, July 1, 1994]

§ 86.1439 Certification Short Test emission test procedures—EPA.

(a) The portions of the performance warranty test procedures described in part 85, subpart W of this chapter designated as ''second-chance'' which are analogous to the CST emission test procedures do not apply to the testing performed in accordance with this subpart. The Administrator selects from among the CST emission test procedures listed in paragraphs (b) through (f) of this section, which are incorporated into the vehicle test run at the point described in § 86.1438(f); that is, after the requirements of § 86.1438(e) have been satisfied.

(b) *CST—Two-speed idle test.* This test consists of an idle sampling mode followed immediately by a high-speed sampling mode. The test timer starts (tt=0) when the conditions specified in § 86.1438(e) are met. The overall maximum test time is 290 seconds (tt=290). The test terminates immediately upon reaching the overall maximum test time. A vehicle that has not yielded passing results by the expiration of the overall test time fails the test.

(1) *Idle mode.* (i) The mode timer starts (mt=0) when the vehicle engine speed is between 350 and 1100 rpm. If engine speed exceeds 1100 rpm or falls below 350 rpm, the mode timer resets to zero and resumes timing. The minimum mode time is 30 seconds. The maximum idle mode length is 90 seconds elapsed time (mt=90).

(ii) The pass/fail analysis begins after an elapsed time of ten seconds (mt=10). A pass or fail determination is made for the vehicle and the mode terminated as described in paragraphs (b)(1)(ii) (A) and (B) of this section.

(A) The vehicle passes the idle mode if the measured values are less than or equal to the applicable short test standards as described in § 86.1438(d)(4) prior to an elapsed time of 90 seconds (mt=90). If the vehicle passes, the mode

terminates immediately, or after an elapsed time of 30 seconds (mt=30), whichever comes second.

(B) The vehicle fails the idle mode and the test is immediately terminated if the requirements of paragraph (b)(1)(i)(A) of this section are not satisfied by an elapsed time of 90 seconds (mt=90).

(2) *High-speed mode.* This mode follows immediately upon termination of the idle mode.

(i) The mode timer resets (mt=0) when the vehicle engine speed is between 2200 and 2800 rpm. If engine speed falls below 2200 rpm or exceeds 2800 rpm for more than two seconds in one excursion, or more than six seconds over all excursions within 30 seconds of the final measured value used in pass/fail determination, the measured value is invalidated and the mode continued. If any excursion lasts for more than ten seconds, the mode timer resets to zero (mt=0) and timing resumes. The minimum high-speed mode length is determined as described in paragraph (b)(2)(ii) of this section. The maximum high-speed mode length is 90 seconds elapsed time (mt=90).

(ii) The pass/fail analysis begins after an elapsed time of ten seconds (mt=10). A pass or fail determination is made for the vehicle and the mode terminates as described in paragraphs (b)(2)(ii) (A) and (B) of this section.

(A) The vehicle passes the high-speed mode and the test is immediately terminated if, at any point prior to an elapsed time of 90 seconds (mt=90), the measured values are less than or equal to the applicable short test standards as described in § 86.1438(d)(4).

(B) The vehicle fails the high-speed mode and the test is terminated if the requirements of paragraph (b)(2)(ii)(A) of this section are not satisfied by an elapsed time of 90 seconds (mt=90).

(c) *CST—Idle test.* This test consists of an idle sampling mode only. The test timer starts when the conditions specified in § 86.1438(e) are met. The overall maximum test time is 145 seconds (tt=145). The test terminates immediately upon reaching the overall maximum test time. A vehicle that has not yielded passing results by the expiration of the overall test time fails the test.

(1) The mode timer starts (mt=0) when the vehicle engine speed is between 350 and 1100 rpm. If engine speed exceeds 1100 rpm or falls below 350 rpm, the mode timer resets to zero and resumes timing. The minimum mode length is determined as described under paragraph (c)(2) of this section. The maximum mode length is 90 seconds elapsed time (mt=90).

(2) The pass/fail analysis begins after an elapsed time of ten seconds (mt=10). A pass or fail determination is made for the vehicle and the mode is terminated in accordance with paragraphs (c)(2) (i) and (ii) of this section.

(i) The vehicle passes the idle mode and the test is immediately terminated if, at any point prior to an elapsed time of 90 seconds (mt=90), the measured values are less than or equal to the applicable short test standards as described in § 86.1438(d)(4).

(ii) The vehicle fails the idle mode and the test is terminated if the requirements of paragraph (c)(2)(i) of this section are not satisfied by an elapsed time of 90 seconds (mt=90).

(d) *CST—Loaded test.* This test consists of a loaded sampling mode followed immediately by an idle sampling mode. The test timer starts (tt=0) when the conditions specified in § 86.1438(e) are met, and the gear selector is in 'drive' for automatic transmissions, or in second gear (or third gear if more appropriate) for manual transmissions. The overall maximum test time is 240 seconds (tt=240). The test terminates immediately upon reaching the overall maximum test time. A vehicle that has not yielded passing results by the expiration of the overall test time fails the test.

(1) *Loaded mode.* (i) The mode timer starts (mt=0) when the dynamometer speed is within the limits specified for the vehicle engine size according to the following schedule. If the dynamometer speed falls outside the limits for more than five seconds in one excursion, or 15 seconds over all excursions, the mode timer resets to zero and resumes timing. The minimum mode length is determined as described in paragraph (d)(1)(ii) (A) and (B) of this section. The maximum mode length is 90 seconds elapsed time (mt=90).

DYNAMOMETER TEST SCHEDULE

Gasoline engine size, no. cylinders	Roll speed, mph (kph)	Normal loading, brake hp (kilowatts)
4 or less	22–25 (35–40)	2.8–4.1 (2.1–3.1)
5–6	29–32 (47–52)	6.8–8.4 (5.1–6.3)
7 or more	32–35 (52–56)	8.4–10.8 (6.3–8.1)

(ii) The pass/fail analysis begins after an elapsed time of ten seconds (mt=10). A pass or fail determination is made for the vehicle and the mode is terminated in accordance with paragraphs (d)(1)(ii) (A) and (B) of this section.

(A) The vehicle passes the loaded mode if the measured values are less than or equal to the applicable short test standards as described in § 86.1438(d)(4) prior to an elapsed time of 90 seconds (mt=90). If the vehicle passes, the mode terminates immediately, or after an elapsed time of 30 seconds (mt=30), whichever comes second.

(B) The vehicle fails the loaded mode and the test is terminated if the requirements of paragraph (d)(1)(ii)(A) of this section are not satisfied by an elapsed time of 90 seconds (mt=90).

(2) *Idle mode.* (i) The mode timer starts (mt=0) five seconds after the dynamometer speed has reached zero and the gear selector is in 'park' or 'neutral'. The minimum idle mode length is determined as described in paragraph (d)(2)(ii) of this section. The maximum idle mode length is 90 seconds elapsed time (mt=90).

(ii) The pass/fail analysis begins after an elapsed time of ten seconds (mt=10). A pass or fail determination is made for the vehicle and the mode is terminated in accordance with paragraphs (d)(2)(ii) (A) and (B) of this section.

(A) The vehicle passes the idle mode and the test is immediately terminated if, at any point prior to an elapsed time of 90 seconds (mt=90), measured values are less than or equal to the applicable short test standards described in § 86.1438(d)(4).

(B) The vehicle fails the idle mode and the test terminates if the requirements of paragraph (d)(2)(ii)(A) of this section are not satisfied by an elapsed time of 90 seconds (mt=90).

(e) *CST—Preconditioned idle test.* This test consists of a high-speed preconditioning mode followed immediately by an idle sampling mode. The test timer starts (tt=0) when the conditions specified in § 86.1438(e) are met. The overall maximum test time is 200 seconds (tt=200). The test terminates immediately upon reaching the overall maximum test time. A vehicle that has not yielded passing results by the expiration of the overall test time fails the test.

(1) *Preconditioning mode.* The mode timer starts (mt=0) when the engine speed is between 2200 and 2800 rpm. The mode continues for an elapsed time of 30 seconds (mt=30). If engine speed falls below 2200 rpm or exceeds 2800 rpm for more than five seconds in any one excursion, or 15 seconds over all excursions, the mode timer resets to zero and resumes timing.

(2) *Idle mode.* (i) The mode timer starts (mt=0) when the vehicle engine speed is between 350 and 1100 rpm. If engine speed exceeds 1100 rpm or falls below 350 rpm, the mode timer resets to zero and resumes timing. The minimum idle mode length is determined as described in paragraph (e)(2)(ii) of this section. The maximum idle mode length is 90 seconds elapsed time (mt=90).

(ii) The pass/fail analysis begins after an elapsed time of ten seconds (mt=10). A pass or fail determination is made for the vehicle and the mode terminates as described in paragraphs (e)(2)(ii) (A) and (B) of this section.

(A) The vehicle passes the idle mode and the test is immediately terminated if, at any point prior to an elapsed time of 90 seconds (mt=90), the measured values are less than or equal to the applicable short test standards as described in § 86.1438(d)(4).

(B) The vehicle fails the idle mode and the test terminates if the requirements of paragraph (e)(2)(ii)(A) of this section are not satisfied by an elapsed time of 90 seconds (mt=90).

(f) *CST—Preconditioned two-speed idle test.* This test consists of a high-speed sampling mode followed immediately by an idle sampling mode. The test timer starts (tt=0) when the conditions specified in § 86.1438(e) are met. The overall maximum test time is 290 seconds (tt=290). The test terminates immediately upon reaching the overall maximum test time. A vehicle that has

not yielded passing results by the expiration of the overall test time fails the test.

(1) *High-speed mode.* (i) The mode timer starts (mt=0) when the vehicle engine speed is between 2200 and 2800 rpm. If the engine speed falls below 2200 rpm or exceeds 2800 rpm for more than two seconds in one excursion, or more than six seconds over all excursions within 30 seconds of the final measured value used in the pass/fail determination, the measured value is invalidated and the mode continued. If any excursion lasts for more than ten seconds, the mode timer resets to zero (mt=0) and timing resumes. The high-speed mode length is 90 seconds elapsed time (mt=90).

(ii) The pass/fail analysis begins after an elapsed time of ten seconds (mt=10). A pass or fail determination is made for the vehicle and the mode is terminated in accordance with paragraphs (f)(1)(ii) (A) and (B) of this section.

(A) The vehicle passes the high-speed mode and the mode is terminated at an elapsed time of 90 seconds (mt=90) if any measured values are less than or equal to the applicable short test standards as described in § 86.1438(d).

(B) The vehicle fails the high-speed mode and the test is terminated if the requirements of paragraph (f)(1)(ii)(A) of this section are not satisfied by an elapsed time of 90 seconds (mt=90).

(2) *Idle mode.* (i) The mode timer starts (mt=0) when the vehicle engine speed is between 350 and 1100 rpm. If the engine speed exceeds 1100 rpm or falls below 350 rpm, the mode timer resets to zero and resumes timing. The minimum idle mode length is determined as described in paragraph (f)(2)(ii) of this section. The maximum idle mode length is 90 seconds elapsed time (mt=90).

(ii) The pass/fail analysis begins after an elapsed time of ten seconds (mt=10). A pass or fail determination is made for the vehicle and the mode is terminated in accordance with paragraphs (f)(2)(ii) (A) and (B) of this section.

(A) The vehicle passes the idle mode and the test is immediately terminated if, at any point prior to an elapsed time of 90 seconds (mt=90), the measured values are less than or equal to the applicable short test standards as described in § 86.1438(d)(4).

(B) The vehicle fails the idle mode and the test is terminated if the requirements of paragraphs (f)(2)(ii)(A) of this section are not satisfied by an elapsed time of 90 seconds (mt=90).

[58 FR 58426, Nov. 1, 1993; 59 FR 33913, 33914, July 1, 1994]

§§ 86.1440–86.1441 [Reserved]

§ 86.1442 Information required.

(a) *General data.* The information listed in paragraphs (a) (1) through (14) of this section must be recorded with respect to each CST. Elements of this general data may be located separately from the CST emission data, as long as the general data can easily be presented together with the CST emission data when a complete data set for the vehicle is desired.

(1) Test number.

(2) Vehicle description, including engine family code, vehicle ID number, version number, manufacturer, number of cylinders, equivalent test weight, weight class and odometer reading.

(3) Date and time of day for the test.

(4) Driver and equipment operator IDs.

(5) Gas analyzers: Analyzer bench ID, analyzer ranges, recordings of analyzer output during zero, span, and sample readings.

(6) Recorder charts or computer printouts: Test number, date, vehicle ID, operator ID, and identification of the measurements recorded.

(7) Soak area ambient temperature (°F).

(8) Test cell ambient temperature (°F), barometric pressure, and humidity. (A central laboratory barometer may be used, provided that individual test cell barometric pressures are shown to be within ±0.1 percent of the barometric pressure at the central barometer location.)

(9) Test fuel: RVP and type (Otto-cycle test fuel or Cold CO test fuel).

(10) Warmup operation performed, for example, none, full Urban Dynamometer Driving Schedule (UDDS), first 505 seconds of the UDDS, other confirmatory test procedure, other transient operation.

(11) Wait time characteristics, including total time and engine off/restart cycle schedule.

(12) Preconditioning; duration and type, for example, minimum 2500 rpm idle or minimum 30 mph (48 kph) loaded steady state operation.

(13) CST procedure type, as described in § 86.1439.

(14) Dynamometer ID.

(b) *CST emission data*. For each CST, the information listed in paragraphs (b) (1) through (3) of this section must be recorded with respect to each sampling mode.

(1) The reported exhaust concentrations, i.e., those for which the product of HC+(151*CO) is at a minimum. Round initial test results to the number of decimal places contained in the respective standards expressed to one additional significant figure; round final test results to the number of decimal places contained in the respective standards. Rounding is done in accordance with ASTM E 29–90, Standard Practice for Using Significant Digits in Test Data to Determine Conformance with Specifications. This procedure has been incorporated by reference (see § 86.1).

(2) The test time and mode time at which the reported exhaust concentrations are at a minimum.

(3) Minimum CO+CO2 concentration (if applicable).

Subpart P—Emission Regulations for Otto-Cycle Heavy-Duty Engines, New Methanol-Fueled Natural Gas-Fueled, and Liquefied Petroleum Gas-Fueled Diesel-Cycle Heavy-Duty Engines, New Otto-Cycle Light-Duty Trucks, and New Methanol-Fueled Natural Gas-Fueled, and Liquefied Petroleum Gas-Fueled Diesel-Cycle Light-Duty Trucks; Idle Test Procedures

AUTHORITY: Secs. 202, 206, 207, 208, 301(a), Clean Air Act, as amended 42 U.S.C. 7521, 7525, 7541, 7542, and 7601.

SOURCE: 48 FR 52252, Nov. 16, 1983, unless otherwise noted.

§ 86.1501–90 Scope; applicability.

This subpart contains gaseous emission idle test procedures for gasoline-fueled and methanol-fueled Otto-cycle heavy-duty engines, and for gasoline-fueled and methanol-fueled Otto-cycle light-duty trucks. It applies to 1990 and later model years.

[54 FR 14611, Apr. 11, 1989]

§ 86.1501–94 Scope; applicability.

(a) This subpart contains gaseous emission idle test procedures for light-duty trucks and heavy-duty engines for which idle CO standards apply. It applies to 1994 and later model years. The idle test procedures are optionally applicable to 1994 through 1996 model year natural gas-fueled and liquified petroleum gas-fueled light-duty trucks and heavy-duty engines.

(b) References in this subpart to engine families and emission control systems shall be deemed to apply to durability groups and test groups as applicable for manufacturers certifying new light-duty trucks and Otto-cycle complete heavy-duty vehicles under the provisions of subpart S of this part.

[65 FR 59963, Oct. 6, 2000]

§ 86.1502–84 Definitions.

The definitions in § 86.084–2 or § 86.1803–01, as applicable, apply to this subpart.

[64 FR 23923, May 4, 1999]

§ 86.1503–84 Abbreviations.

The abbreviations in § 86.084–3 or in § 86.1804–01, as applicable, apply to this subpart.

[64 FR 23923, May 4, 1999]

§ 86.1504–90 Section numbering; construction.

(a) The model year of initial applicability is indicated by the section number. The two digits following the hyphen designate the first model year for which a section is effective. A section remains effective until superseded.

Example: Section 86.1511–84 applies to the 1984 and subsequent model years until superseded. If § 86.1511–85 is promulgated, it would take effect beginning with the 1985 model year. Section 86.1511–83 would apply to model years 1983 and 1984.

(b) A section reference without a model year suffix refers to the section applicable for the appropriate model year.

(c) All provisions in this subpart apply to gasoline-fueled and methanol-fueled Otto-cycle heavy-duty engines, and to gasoline-fueled and methanol-fueled Otto-cycle light-duty trucks.

[54 FR 14611, Apr. 11, 1989]

§ 86.1504–94 Section numbering; construction.

(a) The model year of initial applicability is indicated by the section number. The two digits following the hyphen designate the first model year for which a section is effective. A section remains effective until superseded.

Example: Section 86.1511–84 applies to the 1984 and subsequent model years until superseded. If § 86.1511–85 is promulgated, it would take effect beginning with the 1985 model year. Section 86.1511–83 would apply to model years 1983 and 1984.

(b) A section reference without a model year suffix refers to the section applicable for the appropriate model year.

(c) All provisions in this subpart apply to gasoline-fueled and methanol-fueled Otto-cycle heavy-duty engines, methanol-fueled Diesel-cycle heavy-duty engines, new Otto-cycle light-duty trucks, and liquefied petroleum gas-fueled, natural gas-fueled, and methanol-fueled diesel-cycle light-duty trucks.

[59 FR 48536, Sept. 21, 1994, as amended at 60 FR 34376, June 30, 1995]

§ 86.1505–84 Introduction; structure of subpart.

(a) This subpart describes the equipment and the procedures required to perform idle exhaust emission tests on gasoline-fueled heavy-duty engines and gasoline-fueled light-duty trucks. Subpart A sets forth the testing requirements, reporting requirements, and test intervals necessary to comply with EPA certification procedures.

(b) Four topics are addressed in this subpart. §§ 86.1505–84 through 86.1515–84 set forth specifications and equipment requirements; §§ 86.1516–84 through 86.1526–84 discuss calibration methods and frequency; test procedures and data requirements are listed in §§ 86.1527–84 through 86.1542–84; and calculation formulae are found in § 86.1544–84.

§ 86.1505–90 Introduction; structure of subpart.

(a) This subpart describes the equipment and the procedures required to perform idle exhaust emission tests on gasoline-fueled and methanol-fueled Otto-cycle heavy-duty engines, and gasoline-fueled and methanol-fueled Otto-cycle light-duty trucks. Subpart A sets forth the testing requirements, reporting requirements and test intervals necessary to comply with EPA certification procedures.

(b) Four topics are addressed in this subpart. Sections 86.1505 through 86.1515 set forth specifications and equipment requirement; §§ 86.1516 through 86.1526 discuss calibration methods and frequency; test procedures and data requirements are listed in §§ 86.1527 through 86.1542 and calculation formula are found in § 86.1544.

[54 FR 14611, Apr. 11, 1989]

§ 86.1505–94 Introduction; structure of subpart.

(a) This subpart describes the equipment and the procedures required to perform idle exhaust emission tests on heavy-duty engines and light-duty trucks. Subpart A of this part sets forth the testing requirements, reporting requirements and test intervals necessary to comply with EPA certification procedures.

(b) Four topics are addressed in this subpart. Sections 86.1505 through 86.1515 set forth specifications and equipment requirements; §§ 86.1516 through 86.1526 discuss calibration methods and frequency; test procedures and data requirements are listed in §§ 86.1527 through 86.1542 and calculation formulas are found in § 86.1544.

[59 FR 48536, Sept. 21, 1994, as amended at 60 FR 34376, June 30, 1995]

§ 86.1506–90 Equipment required and specifications; overview.

(a) This subpart contains procedures for performing idle exhaust emission tests on gasoline-fueled and methanol-fueled Otto-cycle heavy-duty engines, and gasoline-fueled and methanol-

fueled Otto-cycle light-duty trucks. Equipment required and specifications are as follows:

(1) *Exhaust emission tests.* All engines and vehicles subject to this subpart are tested for exhaust emissions. Necessary equipment and specifications appear in §§ 86.1509 through 86.1511.

(2) *Fuel and analytical tests.* Fuel requirements for idle exhaust emission testing are specified in § 86.1513. Analytical gases are specified in § 86.1514.

(b) [Reserved]

[54 FR 14612, Apr. 11, 1989]

§ 86.1506–94 Equipment required and specifications; overview.

(a) This subpart contains procedures for performing idle exhaust emission tests on Otto-cycle heavy-duty engines and Otto-cycle light-duty trucks. Equipment required and specifications are as follows:

(1) *Exhaust emission tests.* All engines and vehicles subject to this subpart are tested for exhaust emissions. Necessary equipment and specifications appear in §§ 86.1509 through 86.1511.

(2) *Fuel and analytical tests.* Fuel requirements for idle exhaust emission testing are specified in § 86.1513. Analytical gases are specified in § 86.1514.

(b) [Reserved]

[59 FR 48536, Sept. 21, 1994]

§ 86.1509–84 Exhaust gas sampling system.

(a) The exhaust gas sampling system shall transport the exhaust sample from the engine or vehicle to the analysis system in such a manner as to maintain the integrity of the sample constituents that are to be analyzed.

(b) The sample system shall supply a dry sample (i.e., water removed) to the analysis system.

(c) A CVS sampling system with bag or continuous analysis as specified in 40 CFR part 1065 is permitted as applicable. The inclusion of an additional raw carbon dioxide (CO_2) analyzer as specified in 40 CFR part 1065 is required if the CVS system is used, in order to accurately determine the CVS dilution factor. The heated sample line specified in 40 CFR part 1065 for raw emission requirements is not required for the raw (CO_2) measurement.

(d) A raw exhaust sampling system as specified in 40 CFR part 1065 is permitted.

[48 FR 52252, Nov. 16, 1983, as amended at 60 FR 34376, June 30, 1995; 70 FR 40441, July 13, 2005]

§ 86.1511–84 Exhaust gas analysis system.

(a) Analyzers used for this subpart shall meet the following specifications:

(1) The analyzer used shall conform to the accuracy provisions of 40 CFR part 1065, subparts C, D, and F.

(2) The resolution of the readout device(s) for the range specified in paragraph (a)(1) of this section shall be equal to or less than 0.05 percent for the CO analyzer.

(3) For the range specified in paragraph (a)(1) of this section, the precision shall be less than ±3 percent of full-scale deflection. The precision is defined as two times the standard deviation of five repetitive responses to a given calibration gas.

(4) For the range specified in paragraph (a)(1) of this section, the mean response to a zero calibration gas shall not exceed ±3 percent of full-scale deflection during a 1-hour period.

(5) For the range specified in paragraph (a)(1) of this section the drift of the mean calibration response shall be less than ±3 percent of full scale during a 1-hour period. The calibration response is defined as the analyzer response to a calibration gas after the analyzer has been spanned by the electrical spanning network at the beginning of the 1-hour period.

(6) The analyzer must respond to an instantaneous step change at the entrance to the sampling system with a response equal to 90 percent of that step change within 15 seconds or less on the range specified in paragraph (a)(1) of this section. The step change shall be at least 60 percent of full-scale deflection.

(7) The interference gases listed shall individually or collectively produce an analyzer reading less than ±2 percent of full scale on the range specified in paragraph (a)(1) of this section.

Interference gas	Concentration	Applicable analyzer
CO_2	14 percent	CO

Interference gas	Concentration	Applicable analyzer
C_3H_8	1 percent	CO
H_2O	Saturated vapor at 100° F	CO
NO_X	1,000 ppm	CO
O_2	5 percent	CO

(8) The analyzer shall be able to meet the specifications in paragraph (a) of this section under the following conditions:

(i) After a 30 minute warm-up from the prevailing ambient conditions;

(ii) Between 0 to 85 percent relative humidity; and

(iii) During variations of ±50 percent of nominal sample flow.

(b) The inclusion of a raw CO_2 analyzer as specified in 40 CFR part 1065 is required in order to accurately determine the CVS dilution factor.

[48 FR 52252, Nov. 16, 1983, as amended at 60 FR 34377, June 30, 1995; 70 FR 40441, July 13, 2005]

§ 86.1513–90 Fuel specifications.

The requirements of this section are set forth in § 86.1313–94 for heavy-duty engines, and in § 86.113–90(a) for light-duty trucks.

[70 FR 40441, July 13, 2005]

§ 86.1513–94 Fuel specifications.

The requirements of this section are set forth in 40 CFR part 1065, subpart H, for heavy-duty engines and in § 86.113–94 for light-duty trucks.

[70 FR 40441, July 13, 2005]

§ 86.1514–84 Analytical gases.

(a) The final idle emission test results shall be reported as percent for carbon monoxide on a dry basis.

(b) If the raw CO sampling system specified in 40 CFR part 1065 is used, the analytical gases specified in 40 CFR part 1065, subpart H, shall be used.

(c) If a CVS sampling system is used, the analytical gases specified in 40 CFR part 1065, subpart H, shall be used.

[48 FR 52252, Nov. 16, 1983, as amended at 51 FR 24613, July 7, 1986; 60 FR 34377, June 30, 1995; 70 FR 40441, July 13, 2005]

§ 86.1516–84 Calibration; frequency and overview.

(a) Calibrations shall be performed as specified in §§ 86.1518–84 through 86.1526–84.

(b) At least monthly or after any maintenance which could alter calibration, check the calibration of the CO analyzer. Adjust or repair the analyzer as necessary.

(c) Water traps, filters, or conditioning columns should be checked before each test.

§ 86.1519–84 CVS calibration.

If the CVS system is used for sampling during the idle emission test, the calibration instructions are specified in 40 CFR part 1065, subpart D, for heavy-duty engines, and § 86.119–78 for light-duty trucks.

[70 FR 40441, July 13, 2005]

§ 86.1522–84 Carbon monoxide analyzer calibration.

(a) *Initial check.* (1) Follow good engineering practice for instrument start-up and operation. Adjust the analyzer to optimize performance on the range specified in § 86.1511–84(a)(1).

(2) Calibrate the analyzer with the calibration gas specified in § 86.1514–84.

(3) Adjust the electrical span network such that the electrical span point is correct when the analyzer reads the calibration gas correctly.

(4) Determine that the analyzer complies with the specifications in § 86.1511–84.

(b) *Periodic check.* Follow paragraphs (a) (1), (2), and (3) of this section as specified by § 86.1516–84(b). Adjust or repair the analyzer as necessary.

§ 86.1524–84 Carbon dioxide analyzer calibration.

(a) The calibration requirements for the dilute-sample CO_2 analyzer are specified in 40 CFR part 1065, subpart D, for heavy-duty engines and § 86.124–78 for light-duty trucks.

(b) The calibration requirements for the raw CO_2 analyzer are specified in 40 CFR part 1065, subpart D.

[70 FR 40441, July 13, 2005]

§ 86.1526–84 Calibration of other equipment.

Other test equipment used for testing shall be calibrated as often as necessary according to good engineering practice.

§ 86.1527–84 Idle test procedure; overview.

(a) The idle emission test procedure is designed to determine the raw concentration (in percent) of CO in the exhaust flow at idle. The test procedure begins with the engine at normal operating temperature. (For example, the warm-up for an engine may be the transient engine or chassis dynamometer test.)

(b) Raw emission sampling must be made before dilution occurs from a single exhaust pipe in which exhaust products are homogeneously mixed. The configuration for dual-exhaust systems must also allow for raw emission measurements, which will require that an additional ''Y'' pipe be placed in the exhaust system before dilution.

§ 86.1530–84 Test sequence; general requirements.

(a) The following test sequence lists the major steps encountered during the idle test:

Preparation
Warm-up (or Emission Test)
Preconditioning, 30 seconds minimum, six minutes maximum
Idle Stabilization, 30±5 seconds
Idle Emission Sampling, one minute minimum, six minutes maximum

These steps are described by subsequent procedures.

(b) Ambient test cell conditions during the test shall be those specified in § 86.130–78 or 40 CFR part 1065, subpart F.

[48 FR 52252, Nov. 16, 1983, as amended at 70 FR 40441, July 13, 2005]

§ 86.1537–84 Idle test run.

The following steps shall be taken for each test:

(a) Check the device(s) for removing water from the exhaust sample and the sample filter(s). Remove any water from the water trap(s). Clean and replace the filter(s) as necessary.

(b) Set the zero and span points of the CO analyzer with the electrical spanning network or with analytical gases.

(c) Achieve normal engine operating condition. The transient engine or chassis dynamometer test is an acceptable technique for warm-up to normal operating condition for the idle test. If the emission test is not performed prior to the idle emission test, a heavy-duty engine may be warmed up according to 40 CFR part 1065, subpart F. A light-duty truck may be warmed up by operation through one Urban Dynamometer Driving Schedule test procedure (see § 86.115–78 and appendix I to this part).

(d) Operate the warm engine at 2500 ±50 rpm, or rated torque speed for diesel-cycle engines, and zero load for a minimum of 30 seconds and a maximum of 6 minutes.

(e) If the CVS sampling system is used, the following procedures apply:

(1) If bag samples are drawn, with the sample selector valves in the standby position connect evacuated sample collection bags to the dilute exhaust and dilution air sample collection systems.

(2) Start the CVS (if not already on), the sample pumps, integrators, and the raw CO_2 analyzer, as applicable. (The heat exchanger of the constant volume sampler, if used, shall be running at operating temperature before sampling begins.)

(3) Adjust the sample flow rates to the desired flow rate and set the gas flow measuring devices to zero.

(4) Operate the engine or vehicle at curb idle for 30±5 seconds with the clutch disengaged or in neutral gear. A heavy-duty engine may also be disconnected from the dynamometer, or the dynamometer may be shut off.

(5) Begin raw and dilute sampling.

(6) For bag sampling, sample idle emissions long enough to obtain a sufficient bag sample, but in no case shorter than 60 seconds nor longer than 6 minutes. Follow the sampling and exhaust measurements requirements of 40 CFR part 1065, subpart F, for conducting the raw CO_2 measurement.

(7) As soon as possible, transfer the idle test exhaust and dilution air samples to the analytical system and process the samples according to § 86.1540–

84. Obtain a stabilized reading of the exhaust sample on all analyzers within 20 minutes of the end of the sample collection phase of the test.

(f) If the raw exhaust sampling and analysis technique specified in 40 CFR part 1065 is used, the following procedures apply:

(1) Warm up the engine or vehicle per paragraphs (c) and (d) of this section. Operate the engine or vehicle at the conditions specified in paragraph (e)(4) of this section.

(2) Follow the sampling and exhaust measurement requirements of 40 CFR part 1065, subpart F. The idle sample shall be taken for 60 seconds minimum, and no more than 64 seconds. The chart reading procedures of 40 CFR part 1065, subpart F, shall be used to determine the analyzer response.

(g) If the engine or vehicle stalls at any time during the test run, the test is void.

[48 FR 52252, Nov. 16, 1983, as amended at 60 FR 34377, June 30, 1995; 70 FR 40441, July 13, 2005]

§ 86.1540–84 Idle exhaust sample analysis.

(a) Record the CO idle concentrations in percent.

(b) If the CVS sampling system is used, the analysis procedures for dilute CO and CO_2 specified in 40 CFR part 1065 apply. Follow the raw CO_2 analysis procedure specified in 40 CFR part 1065, subpart F, for the raw CO_2 analyzer.

(c) If the continuous raw exhaust sampling technique specified in 40 CFR part 1065 is used, the analysis procedures for CO specified in 40 CFR part 1065, subpart F, apply.

[48 FR 52252, Nov. 16, 1983, as amended at 70 FR 40441, July 13, 2005]

§ 86.1542–84 Information required.

(a) *General data—heavy-duty engines.* Information shall be recorded for each idle emission test as specified in 40 CFR part 1065, subpart G. The following test data are required:

(1) Date and time of day.

(2) Test number.

(3) Engine intake air or test cell temperature.

(4) Barometric pressure.

NOTE: A central laboratory barometer may be used: *Provided,* That individual test cell barometric pressures are shown to be within ±0.1 percent of the barometric pressure at the central barometer location.

(5) Engine intake or test cell and CVS dilution air humidity.

(6) Curb idle speed during the test.

(7) Idle exhaust CO concentration (dry basis).

(8) Idle exhaust raw CO_2 concentration (if applicable).

(9) Dilute bag sample CO and CO_2 concentrations (if applicable).

(10) Total CVS flow rate with calculated dilution factor for the idle mode (if applicable).

(b) *General data—light-duty trucks.* The following information shall be recorded with respect to each test:

(1) Test number.

(2) System or device tested (brief description).

(3) Date and time of day for the test.

(4) Instrument operated.

(5) Vehicle: ID number, manufacturer, model year, standards, engine family, evaporative emissions family, basic engine description (including displacement, number of cylinders, turbocharger used and catalyst usage), fuel system (including number of carburetors, number of carburetor barrels, fuel injection type and fuel tank(s) capacity and location), engine code, gross vehicle weight rating, inertia weight class and transmission configuration, as applicable.

(6) All pertinent instrument information such as tuning, gain, serial number, detector number and range. As an alternative a reference to a vehicle test cell number may be used, with the advance approval of the Administrator, provided test cell calibration records show the pertinent instrument information.

(7) Recorder charts or computer printouts: Identify zero, span, exhaust gas and dilution air sample traces or computer readings (if applicable).

(8) Test cell ambient temperature and, if applicable, barometric pressure and humidity.

NOTE: A central laboratory barometer may be used: *Provided,* That individual test cell barometric pressures are shown to be within + 0.1 percent of the barometric pressure at the central barometer location.

(9) Pressure of the mixture of exhaust and dilution air entering the CVS metering device (or pressure drop across

the CFV), the pressure increase across the device, and the temperature at the inlet (if applicable). The temperature may be recorded continuously or digitally to determine temperature variations (if applicable).

(10) The number of revolutions of the positive displacement pump accumulated while exhaust samples are being collected (if applicable). The number of standard cubic feet metered by a critical flow venturi would be the equivalent record for a CFV (if applicable).

(11) The humidity of the dilution air.

NOTE: If conditioning columns are not used (see §§ 86.122 and 86.144) this measurement can be deleted. If the conditioning columns are used and the dilution air is taken from the test cell, the ambient humidity can be used for this measurement.

(12) Curb idle engine speed during the test.

(13) Idle exhaust CO concentration (dry basis).

(14) Idle exhaust raw CO_2 concentration (if applicable).

(15) Dilute bag sample CO and CO_2 concentrations (if applicable).

(16) Total CVS flow rate with calculated dilution factor for the idle mode (if applicable).

[48 FR 52252, Nov. 16, 1983, as amended at 49 FR 48149, Dec. 10, 1984; 70 FR 40441, July 13, 2006]

§ 86.1544–84 Calculation; idle exhaust emissions.

(a) The final idle emission test results shall be reported as percent for carbon monoxide on a dry basis.

(b) If a CVS sampling system is used, the following procedure shall apply:

(1) Use the procedures, as applicable, in 40 CFR 1065.650 to determine the dilute wet-basis CO and CO_2 in percent.

(2) Use the procedure, as applicable, in 40 CFR 1065.650 to determine the raw dry-basis CO_2 in percent.

(3) Convert the raw dry-basis CO_2 to raw wet-basis. An assumption that the percent of water by volume in the raw sample is equal to the percent of raw dry-basis CO_2 minus 0.5 percent is acceptable. For example:

10.0% dry $CO_2 - 0.5\% = 9.5\%$ water

$(1.00 - 0.095)$ (10.0% dry CO_2)=9.05% wet CO_2

(4) Calculate the CVS dilution factor (DF) by:

$$DF = \frac{\text{Raw wet } CO_2 - \text{background } CO_2}{\text{Dilute wet } CO_2 - \text{background } CO_2}$$

(5) Convert the dilute wet-basis CO to dilute dry-basis values. An assumption that the percent of water by volume in the sample bag is 2 percent is acceptable. For example:

Dilute dry CO=(dilute wet CO)/(1.00–0.02)

(6) Calculate the raw dry-basis CO values by:

Raw dry CO=(DF) (dilute dry CO)

(c) If the raw exhaust sampling and analysis system specified in 40 CFR part 1065 is used, the percent for carbon monoxide on a dry basis shall be calculated using the procedure, as applicable, in 40 CFR 1065.650.

(Secs. 202, 203, 206, 207, 208, 301a, Clean Air Act, as amended; 42 U.S.C. 7521, 7522, 7525, 7541, 7542, 7601a)

[48 FR 52252, Nov. 16, 1983, as amended at 49 FR 48149, Dec. 10, 1984; 50 FR 10708, Mar. 15, 1985; 51 FR 24613, July 7, 1986; 70 FR 40441, July 13, 2005]

Subpart Q—Regulations for Altitude Performance Adjustments for New and In-Use Motor Vehicles and Engines

AUTHORITY: Secs. 215 and 301, Clean Air Act, as amended (42 U.S.C. 7550 and 7601).

SOURCE: 45 FR 66956, Oct. 8, 1980, unless otherwise noted.

§ 86.1601 General applicability.

This subpart applies to manufacturers of motor vehicles and motor vehicle engines (hereafter referred to as vehicles) which are subject to the requirements of title II of the Clean Air Act. This subpart applies to the following vehicles:

(a) 1968 and later model year light-duty vehicles and light-duty trucks.

(b) 1970 and later model year heavy-duty engines built after December 31, 1969.

(c) 1978 and later model year motorcycles built after December 31, 1977.

(d) References in this subpart to engine families and emission control systems shall be deemed to apply to durability groups and test groups as applicable for manufacturers certifying new light-duty vehicles, light-duty trucks, and Otto-cycle complete heavy-duty vehicles under the provisions of subpart S of this part.

[45 FR 66956, Oct. 8, 1980, as amended at 64 FR 23923, May 4, 1999; 65 FR 59963, Oct. 6, 2000]

§ 86.1602 Definitions.

The definitions provided in subpart A also apply in this subpart. Additional definitions that apply in this subpart are as follow:

Altitude performance adjustments are adjustments or modifications made to vehicle, engine, or emission control functions in order to improve emission control performance at altitudes other than those for which the vehicles were designed.

Low altitude means any elevation less than or equal to 1,219 meters (4,000 feet).

Manufacturer parts are parts produced or sold by the manufacturer of the motor vehicle or motor vehicle engine.

§ 86.1603 General requirements.

(a) Manufacturers of vehicles specified in § 86.1601 shall submit to the Administrator for approval the following altitude performance adjustment instructions.

(1) Low-altitude adjustment instructions for vehicles certified to meet the appropriate high-altitude emission standards.

(2) High-altitude adjustment instructions for vehicles certified to meet the appropriate low-altitude emission standards.

(b) Manufacturers are not required to submit altitude adjustment instructions for vehicles equipped with systems or devices that compensate (in full or in part) the engine fuel metering system for air density changes. Manufacturers claiming this exemption must submit to the Administrator for approval a notification of the claim specifying the affected vehicles. The notification must also describe the compensating system used.

(c) Manufacturers may request the Administrator to waive the application of this regulation for vehicles which potentially may never be operated at an altitude other than that for which they were designed (such as vehicles which are not offered for sale within the continental United States).

(d) Manufacturers shall meet the requirements of paragraph (a), according to the following schedule:

(1) Altitude adjustment instructions for all 1980 and earlier model year vehicles or engines shall be submitted to the Administrator within one (1) year of the effective date of this regulation.

(2) Altitude adjustment instructions for 1982 and later model year vehicles or engines shall be submitted to the Administrator within 30 days of the issuance of the certificate of conformity for those vehicles or engines. For vehicles or engines certified for the 1981 model year before the publication of this regulation, altitude adjustment instructions shall be submitted within 90 days of the publication of this regulation.

(e) Failure to submit altitude performance adjustment instructions in accordance with this section is a violation of section 203(a)(3) of the Clean Air Act and may result in penalties as specified in section 205 of the Clean Air Act. The Administrator may grant extensions of the schedule in paragraph (c) if the manufacturer submits a written request to the Administrator specifying the reasons for the need for the extension. Requests for an extension must be received by EPA at least 5 working days prior to the submittal date contained in paragraph (d).

(f) The adjustment instructions (including labels) that the Administrator approves under this subpart shall be made available by the manufacturer at no cost to service outlets and the general public. EPA encourages manufacturers to notify vehicle owners in high-altitude areas of the availability of high-altitude adjustments.

(g) If altitude adjustments are performed according to the instructions approved by the Administrator, they will not be treated as violations of the tampering provisions of section 203(a) of the Act except as described below:

§ 86.1604 Conditions for disapproval.

(a) The Administrator shall not approve altitude performance adjustments that will:

(1) Cause any regulated pollutant emission level to increase if the emission level exceeded the appropriate emission standard before adjustment was made.

(2) Cause any regulated pollutant emission level to exceed the appropriate emission standard if the emission level did not exceed the emission standard before the adjustment was made.

(3) For light-duty vehicles, light-duty trucks, motorcycles, heavy-duty gasoline-fueled engines, cause any reduction of vehicle performance (as evaluated by the manufacturer) such that vehicle drivers will likely complain.

(4) Be of such technical complexity or require such complex, expensive, or exclusive equipment that a competent mechanic in an average service establishment cannot perform the adjustments correctly. Adjustment procedures should not require knowledge or training beyond that required to perform normal engine maintenance. All required equipment must be available to any service establishment at competitive cost.

(5) Require the use of manufacturer parts, unless they are necessary to ensure emission control performance and unless the Administrator grants a waiver under section 207(c)(3)(B) of the Act.

(6) Removes or defeats the parameter adjustment controls for the parameters listed in §§ 86.081–22(e)(1)(i) and 86.082–22(e)(1)(i) for light-duty vehicles and light-duty trucks, and § 86.428–80(d) for motorcycles unless:

(i) The manufacturer determines that it is reasonable to restore the parameter adjustment control in use and provides appropriate instruction as part of the high-altitude performance adjustment instructions, or

(ii) The manufacturer determines that is is not reasonable to restore the parameter adjustment control in use and alternatively includes on the label required in § 86.1606 a statement to the effect that the labeled vehicle can be adjusted but that adjustment to other than manufacturer specification may be considered violation of Federal law.

(b) If the Administrator determines that the altitude performance adjustment instructions cannot be approved, the Administrator shall notify the manufacturer in writing of the disapproval. This notification shall explain the reasons for the disapproval.

(1) Within 20 working days of the date of a notification of disapproval, the manufacturer may file a written appeal to the Administrator. The Administrator may allow additional oral or written testimony prior to rendering a final decision.

(2) If the manufacturer files no appeal with the Administrator, the disapproval becomes final.

(3) Within 30 days following the Administrator's final decision of disapproval, the manufacturer must submit new altitude performance adjustment instructions applying to all of the vehicles for which the disapproved instructions applied. If these new instructions are not submitted within 30 days, EPA may take action under sections 203(a)(3) and 205 of the Act. If the new altitude performance adjustment instructions are disapproved by the Administrator, the manufacturer may follow the appeal procedures under paragraphs (b)(1) and (b)(2) of this section.

(c) If the Administrator makes a final decision to disapprove the new instructions, EPA may take action under sections 203(a)(3) and 205 of the Act.

§ 86.1605 Information to be submitted.

(a) Manufacturers shall submit to the Administrator the text of the altitude performance adjustment instructions to be provided to vehicle owners and service establishments. Each set of altitude performance adjustment instructions must set forth the adjustment procedure (including the installation of the label required by § 86.1606) to be followed and identify the vehicles for which the instructions are applicable. At a minimum, each set of instructions shall identify the vehicle applicability by manufacturer, car line, model year, engine displacement, engine family, and exhaust emission control systems. Manufacturers may specify vehicle applicability in greater detail if necessary, but such specifications must

be identifiable to the public and the service industry through vehicle marking or codes.

(b) The manufacturer shall submit to the Administrator the following information about the adjustments:

(1) Specifications of changes in calibrations of any component, including the original and new calibration values or curves;

(2) Descriptions of component additions, including a full description of the new components along with the configurations (sketch or drawing), calibration values, and part numbers;

(3) Descriptions of component replacements, including all items in paragraph (b)(2) of this section, for the new parts. Also, a description of the differences between the original component and the new component with respect to design, calibration, and function;

(4) Descriptions of any special tools necessary to perform the adjustments.

(c) The manufacturer shall submit to the Administrator the following evaluations of the adjustments:

(1) A statement that the conditions of § 86.1604 (a) (1) and (2) are not caused by the adjustment, and supporting information for this statement consisting of technical evaluations (consistent with good engineering practice) or emission test data.

(2) A statement that vehicle performance is generally unchanged or improved as result of the adjustments, and supporting information for this statement consisting of technical evaluations or driver evaluations.

(3) Information that shows compliance with section 202(a)(4)(A) of the Act (which prohibits vehicles from causing unreasonable risks to public health, welfare, and safety).

(d) The manufacturer shall submit to the Administrator for approval a copy or sample of the label required by § 86.1606 and a copy of the instructions for installation of the label.

§ 86.1606 Labeling.

(a) The manufacturer shall make available to the public as part of the altitude performance adjustment instructions the labels described in this section. Instructions for installing the labels according to the requirements of this section shall be provided with each label.

(b) The label installation instructions shall indicate the following information.

(1) For light-duty vehicles, light-duty trucks, and heavy-duty engines, the label should be affixed in a readily visible position in the engine compartment and beside (to the extent possible) the existing label which is required under § 86.079–35.

(2) For motorcycles, the label should be affixed in a readily accessible position and beside (to the extent possible) the existing label which is required under § 86.413–78(a)(1).

(3) The instructions shall also indicate that the label should not be affixed to any equipment that can be easily detached from the vehicle.

(c) The label must be constructed such that if installed properly, it cannot be removed without destroying or defacing the label.

(d) The label shall contain the following information lettered in the English language in block letters and numerals, which must be of a color that contrasts with the background of the label:

(1) The label heading: Vehicle Emission Control Information Update;

(2) Full corporate name and trademark of the vehicle manufactuer;

(3) The statement: ''This vehicle has been (adjusted) (modified) to improve emission control performance when operated at (high) (low) altitude'';

(4) Information on where altitude performance adjustment instructions may be obtained or include the actual altitude performance adjustment instructions;

(5) The new tuneup specifications (if changed from the original label specifications) at the applicable altitude.

Subpart R—General Provisions for the Voluntary National Low Emission Vehicle Program for Light-Duty Vehicles and Light-Duty Trucks

SOURCE: 62 FR 31242, June 6, 1997, unless otherwise noted.

§ 86.1701–99 General applicability.

(a) The provisions of this subpart may be adopted by vehicle manufacturers pursuant to the provisions specified in § 86.1705. The provisions of this subpart are generally applicable to 1999 and later model year light-duty vehicles and light light-duty trucks to be sold in the Northeast Trading Region, and 2001 and later model year light-duty vehicles and light light-duty trucks to be sold in the United States. In cases where a provision applies only to certain vehicles based on model year, vehicle class, motor fuel, engine type, vehicle emission category, intended sales destination, or other distinguishing characteristics, such limited applicability is cited in the appropriate section or paragraph. The provisions of this subpart shall be referred to as the ''National Low Emission Vehicle Program'' or ''National LEV'' or ''NLEV.''

(b) All requirements of 40 CFR parts 85 and 86, unless specifically superseded by the provisions of this subpart, shall apply to vehicles under the National LEV Program. Compliance with the provisions of this subpart will be deemed compliance with some of the requirements of 40 CFR parts 85 and 86, as set forth elsewhere in this subpart.

(c) The requirements of this subpart apply to new vehicles manufactured by covered manufacturers through model year 2003. In addition, the requirements of this subpart apply to new vehicles manufactured by covered manufacturers for model years prior to the first model year for which a mandatory federal exhaust emissions program for light-duty vehicles and light light-duty trucks is at least as stringent as the National LEV program with respect to NMOG, NO_X, and CO exhaust emissions, as determined by the Administrator, provided that such a program is promulgated no later than December 15, 2000, and is effective no later than model year 2006.

(d) Adoption of the National LEV program does not impose gasoline or other in-use fuel requirements and is not intended to require any new federal or state regulation of fuels. Vehicles under National LEV will be able to operate on any fuels, including conventional gasoline, that, in the absence of the National LEV program, could be sold under federal or state law.

(e) References in this subpart to engine families and emission control systems shall be deemed to refer to durability groups and test groups as applicable for manufacturers certifying new light-duty vehicles and light-duty trucks under the provisions of subpart S of this part.

(f) The provisions of this subpart are not applicable to 2004 or later model year vehicles, except where specific references to provisions of this subpart are made in conjunction with provisions applicable to such vehicles.

[62 FR 31242, June 6, 1997. Redesignated and amended at 63 FR 966, Jan. 7, 1998; 64 FR 23923, May 4, 1999; 65 FR 6851, Feb. 10, 2000]

§ 86.1702–99 Definitions.

(a) The definitions in subpart A of this part apply to this subpart, except where the same term is defined differently in paragraph (b) of this section.

(b) The following definitions shall apply to this subpart:

Advanced technology vehicle (ATV) means any light-duty vehicle or light light-duty truck that is covered by a federal certificate of conformity or an Executive Order, as defined in § 86.1002, which is either:

(1) A dual fuel, flexible fuel, or dedicated alternatively fueled vehicle certified as a TLEV or more stringent when operated on the alternative fuel;

(2) A ULEV or Inherently Low-Emission Vehicle (ILEV), as defined in 40 CFR 88.302, either conventionally or alternatively fueled;

(3) An HEV or ZEV.

Alcohol fuel means either methanol or ethanol as those terms are defined in this subpart.

All-electric range test means a test sequence used to determine the range of an electric vehicle or of a hybrid electric vehicle without the use of its auxiliary power unit. The All-Electric Range Test cycle is defined in § 86.1770.

All States Trading Region (ASTR) means the region comprised of all states except the OTC States that have not opted into National LEV pursuant to the opt-in provisions at § 86.1705 or that have opted out of National LEV

and whose opt-outs have become effective, as provided at § 86.1707; California; and any state outside the OTR with a Section 177 Program in effect that does not allow National LEV as a compliance alternative.

Averaging sets are the categories of LDVs and LDTs for which the manufacturer calculates a fleet average NMOG value. The four averaging sets for fleet average NMOG value calculation purposes are:

(1) Class A delivered to a point of first sale in the Northeast Trading Region;

(2) Class A delivered to a point of first sale in the All States Trading Region;

(3) Class B delivered to a point of first sale in the Northeast Trading Region;

(4) Class B delivered to a point of first sale in the All States Trading Region.

Axle ratio means the number of times the input shaft to the differential (or equivalent) turns for each turn of the drive wheels.

Battery pack means any electrical energy storage device consisting of any number of individual battery modules which is used to propel electric or hybrid electric vehicles.

Certification level means the official exhaust emission result from an emission-data vehicle which has been adjusted by the applicable mass deterioration factor and is submitted to the Administrator for use in determining compliance with an emission standard for the purpose of certifying a particular engine family. For those engine families which are certified using reactivity adjustment factors developed by the manufacturer pursuant to appendix XVII of this part, the exhaust NMOG certification level shall include adjustment by the ozone deterioration factor.

Class A comprises LDVs and LDTs 0–3750 lbs LVW that are subject to the provisions of this subpart.

Class B comprises LDTs 3751–5750 lbs LVW that are subject to the provisions of this subpart.

Continually regenerating trap oxidizer system means a trap oxidizer system that does not utilize an automated regeneration mode during normal driving conditions for cleaning the trap.

Conventional gasoline means any certification gasoline which meets the specifications of § 86.113(a). The ozone-forming potential of conventional gasoline vehicle emissions shall be determined by using the methods and gasoline specifications contained in appendix XVII of this part.

Core Stable Standards means the standards and other requirements listed in § 86.1707(d)(9)(i) (A) through (F).

Covered state means a state that meets the conditions specified under § 86.1705(d).

Covered vehicle or engine means a vehicle specified in § 86.1701(a), or an engine in such a vehicle, that is manufactured by a covered manufacturer.

Credits means fleet average NMOG credits as calculated from the amount that the manufacturer's applicable fleet average NMOG value is below the applicable fleet average NMOG standard, times the applicable production for a given model year. NMOG credits have units of g/mi.

Debits means fleet average NMOG debits as calculated from the amount that the manufacturer's applicable fleet average NMOG value is above the applicable fleet average NMOG standard, times the applicable production for a given model year. NMOG debits have units of g/mi.

Dedicated ethanol vehicle means any ethanol-fueled motor vehicle that is engineered and designed to be operated solely on ethanol.

Dedicated methanol vehicle means any methanol-fueled motor vehicle that is engineered and designed to be operated solely on methanol.

Diesel engine means any engine powered with diesel fuel, gaseous fuel, or alcohol fuel for which diesel engine speed/torque characteristics and vehicle applications are retained.

Electric vehicle means any vehicle which operates solely by use of a battery or battery pack. This definition also includes vehicles which are powered mainly through the use of an electric battery or battery pack, but which use a flywheel that stores energy produced by the electric motor or through regenerative braking to assist in vehicle operation.

Element of design means any control system (i.e., computer software, electronic control system, emission control system, computer logic), and/or control system calibrations and/or the results of systems interaction, and/or hardware items on a motor vehicle or motor vehicle engine.

Ethanol means any fuel for motor vehicles and motor vehicle engines that is composed of either commercially available or chemically pure ethanol (CH_3CH_2OH) and gasoline as specified in § 86.1771 (Fuel Specifications). The required fuel blend is based on the type of ethanol-fueled vehicle being certified and the particular aspect of the certification procedure being conducted.

Ethanol vehicle means any motor vehicle that is engineered and designed to be operated using ethanol as a fuel.

Executive Officer of the California Air Resources Board (ARB), as used in the referenced materials listed in § 86.1 and appendix XIII of this part, means the Administrator of the Environmental Protection Agency (EPA).

Existing ZEV Mandate means any state regulation or other law that imposes (or purports to impose) obligations on auto manufacturers to produce, deliver for sale, or sell a certain number or percentage of ZEVs and that was adopted prior to December 16, 1997.

Fleet average NMOG value is the fleet average NMOG value calculated for a particular averaging set, based upon the applicable production for that averaging set.

49 states is the region comprised of the United States excluding California.

Fuel-fired heater means a fuel burning device which creates heat for the purpose of warming the passenger compartment of a vehicle but does not contribute to the propulsion of the vehicle.

Gaseous fuels means liquefied petroleum gas, compressed natural gas, or liquefied natural gas fuels for use in motor vehicles.

Hybrid electric vehicle (HEV) means any vehicle which is included in the definition of a ''series hybrid electric vehicle,'' a ''parallel hybrid electric vehicle,'' or a ''battery assisted combustion engine vehicle.''

Low emission vehicle (LEV) means any vehicle certified to the low emission vehicle standards specified in this subpart.

Low volume manufacturer, for a particular model year, means any vehicle manufacturer that: Is considered a ''small volume manufacturer'' by the State of California according to the State of California regulatory definition of ''small volume manufacturer'', contained in the California Regulatory Requirements Applicable to the National Low Emission Vehicle Program (October, 1996), which is incorporated by reference (see § 86.1); and has nationwide sales of light-duty vehicles and light light-duty trucks less than or equal to 40,000 units per model year based on the average number of vehicles sold by the manufacturer for each of the three most recent model years. For manufacturers certifying for the first time, model-year sales shall be based on projected sales.

Methane reactivity adjustment factor means a factor applied to the mass of methane emissions from natural gas fueled vehicles for the purpose of determining the gasoline equivalent ozone-forming potential of the methane emissions.

Methanol means any fuel for motor vehicles and motor vehicle engines that is composed of either commercially available or chemically pure methanol (CH_3OH) and gasoline as specified in § 86.1771 (Fuel Specifications). The required fuel blend is based on the type of methanol-fueled vehicle being certified and the particular aspect of the certification procedure being conducted.

Methanol vehicle means any motor vehicle that is engineered and designed to be operated using methanol as a fuel.

Natural gas means either compressed natural gas or liquefied natural gas.

Natural gas vehicle means any motor vehicle that is engineered and designed to be operated using either compressed natural gas or liquefied natural gas.

Non-Core Stable Standards means the standards and other requirements listed in § 86.1707(d)(9)(i) (G) through (L).

Non-methane organic gases (NMOG) means the sum of oxygenated and non-oxygenated hydrocarbons contained in

a gas sample as measured in accordance with Chapter 5 of the California Regulatory Requirements Applicable to the National Low Emission Vehicle Program (October, 1996). These requirements are incorporated by reference (see § 86.1).

Non-regeneration emission test means a complete emission test which does not include a regeneration.

Northeast Trading Region (NTR) means the region comprised of the states that meet the conditions specified under § 86.1705(d).

Organic material non-methane hydrocarbon equivalent (or OMNMHCE) for methanol-fueled vehicles means the sum of the carbon mass contribution of non-oxygenated hydrocarbons (excluding methane), methanol, and formaldehyde as contained in a gas sample, expressed as gasoline-fueled hydrocarbons. For ethanol-fueled vehicles, organic material non-methane hydrocarbon equivalent (OMNMHCE) means the sum of carbon mass contribution of non-oxygenated hydrocarbons (excluding methane), methanol, ethanol, formaldehyde and acetaldehyde as contained in a gas sample, expressed as gasoline-fueled hydrocarbons.

Ozone deterioration factor means a factor applied to the mass of NMOG emissions from TLEVs, LEVs, or ULEVs which accounts for changes in the ozone-forming potential of the NMOG emissions from a vehicle as it accumulates mileage.

Ozone Transport Commission States or OTC States means the States of Connecticut, Delaware, Maine, Maryland, Massachusetts, New Hampshire, New Jersey, New York, Pennsylvania, Rhode Island, Vermont and Virginia, and the District of Columbia.

Parallel hybrid electric vehicle means any vehicle which allows power to be delivered to the driven wheels by either a combustion engine and/or by a battery powered electric motor.

Periodically regenerating trap oxidizer system means a trap oxidizer system that utilizes, during normal driving conditions for cleaning the trap, an automated regeneration mode which can be easily detected.

Point of first sale is the location where the completed light-duty vehicle or light-duty truck is purchased, also known as the final product purchase location. The point of first sale may be a retail customer, dealer, distributor, fleet operator, broker, secondary manufacturer, or any other entity which comprises the point of first sale. In cases where the end user purchases the completed vehicle directly from the manufacturer, the end user is the point of first sale.

Production is the number of vehicles and/or trucks that a manufacturer produces in a given model year that are subject to the provisions of this subpart and are included in the same averaging set.

Reactivity adjustment factor means a fraction applied to the mass of NMOG emission from a vehicle powered by a fuel other than conventional gasoline for the purpose of determining a gasoline-equivalent NMOG emission value. The reactivity adjustment factor is defined as the ozone-forming potential of the exhaust from a vehicle powered by a fuel other than conventional gasoline divided by the ozone-forming potential of conventional gasoline vehicle exhaust.

Regeneration means the process of oxidizing accumulated particulate matter. It may occur continually or periodically.

Regeneration emission test means a complete emission test which includes a regeneration.

Regeneration interval means the interval from the start of a regeneration to the start of the next regeneration.

Section 177 Program means State regulations or other laws, except ZEV Mandates, that apply to any of the following categories of motor vehicles: Passenger cars, light-duty trucks up through 6,000 pounds GVWR, and medium-duty vehicles from 6,001 to 14,000 pounds GVWR if designed to operate on gasoline, as these categories of motor vehicles are defined in the California Code of Regulations, Title 13, Division 3, Chapter 1, Article 1, Section 1900.

Series hybrid electric vehicle means any vehicle which allows power to be delivered to the driven wheels solely by a battery powered electric motor, but which also incorporates the use of a combustion engine to provide power to the battery and/or electric motor.

37 States is the trading region comprised of the United States excluding California and the Northeast Trading Region.

Transitional low emission vehicle (TLEV) means any vehicle certified to the transitional low emission vehicle standards specified in this subpart.

Trap oxidizer system means an emission control system which consists of a trap to collect particulate matter and a mechanism to oxidize the accumulated particulate.

Type A hybrid electric vehicle means an HEV which achieves a minimum range of 60 miles over the All-Electric Range Test as defined in § 86.1770.

Type B hybrid electric vehicle means an HEV which achieves a range of 40–59 miles over the All-Electric Range Test as defined in § 86.1770.

Type C hybrid electric vehicle means an HEV which achieves a range of 0–39 miles over the All-Electric Range test and all other HEVs excluding ''Type A'' and ''Type B'' HEVs as defined in § 86.1770.

Ultra-low emission vehicle (ULEV) means any vehicle certified to the ultra-low emission vehicle standards specified in this subpart.

Zero-emission vehicle (ZEV) means any vehicle which is certified to produce zero emissions of any criteria pollutants under any and all possible operational modes and conditions. Incorporation of a fuel fired heater shall not preclude a vehicle from being certified as a ZEV provided the fuel fired heater cannot be operated at ambient temperatures above 40 degrees Fahrenheit and the heater is demonstrated to have zero evaporative emissions under any and all possible operational modes and conditions.

ZEV Mandate means any state regulation or other law that imposes (or purports to impose) obligations on auto manufacturers to produce, deliver for sale, or sell a certain number or percentage of ZEVs.

[62 FR 31242, June 6, 1997. Redesignated and amended at 63 FR 966, Jan. 7, 1998]

§ 86.1703–99 Abbreviations.

(a) The abbreviations in subpart A of this part apply to this subpart.

(b) In addition, the following abbreviations shall apply to this subpart:

ASTR—All States Trading Region
HEV—hybrid electric vehicle.
LEV—low emission vehicle.
NMOG—non-methane organic gases.
NTR—Northeast Trading Region.
OTC—Ozone Transport Commission
TLEV—transitional low emission vehicle.
ULEV—ultra low emission vehicle.
ZEV—zero emission vehicle.

[62 FR 31242, June 6, 1997. Redesignated and amended at 63 FR 967, Jan. 7, 1998]

§ 86.1704–99 Section numbering; construction.

(a) The model year of initial applicability is indicated by the last two digits of the six-digit group of the section number. A section remains in effect for subsequent model years until it is superseded.

(b) A section reference without a model year suffix shall be interpreted to be a reference to the section applicable to the appropriate model year.

[62 FR 31242, June 6, 1997. Redesignated at 63 FR 967, Jan. 7, 1998]

§ 86.1705–99 General provisions; opt-in.

(a) *Covered manufacturers*. Covered manufacturers must comply with the provisions in this subpart, and in addition, must comply with the requirements of 40 CFR parts 85 and 86. A manufacturer shall be a covered manufacturer if:

(1) The manufacturer (or, in the case of joint ventures or similar cooperative arrangements between two or more manufacturers, the participating manufacturers) has opted into the program pursuant to paragraph (c) of this section;

(2) Where a manufacturer has included a condition on opt-in provided for in paragraph (c)(2) of this section, that condition has been satisfied; and

(3) The manufacturer has not opted out, pursuant to § 86.1707, or the manufacturer has opted out but that opt-out has not become effective under § 86.1707.

(b) Covered manufacturers must comply with the standards and requirements specified in this subpart beginning in model year 1999. A manufacturer not listed in § 86.1706(c) that opts into the program after EPA issues a finding pursuant to § 86.1706(b) that the program is in effect must comply with the standards and requirements of this subpart beginning in the model year

named for the calendar year after the calendar year in which EPA receives the manufacturer's opt-in. Light-duty vehicles and light light-duty trucks sold by covered manufacturers must comply with the provisions of this subpart.

(c) *Manufacturer opt-ins.* (1) To opt into the National LEV program, a motor vehicle manufacturer must submit a written opt-in notification to the Administrator signed by a person or entity within the corporation or business with authority to bind the corporation or business to its election and holding the position of vice president for environmental affairs or a position of comparable or greater authority. The manufacturer shall send a copy of this notification to : Director, Vehicles Programs and Compliance Division; U.S. Environmental Protection Agency; 2565 Plymouth Road; Ann Arbor, Michigan, 48105. The notification must unambiguously and unconditionally (apart from the permissible conditions specified in paragraph (c)(2) of this section) indicate the manufacturer's agreement to opt into the program and be subject to the provisions in this subpart, and include the following language:

XX COMPANY, its subsidiaries, successors and assigns hereby opts into the voluntary National LEV program, as set forth in 40 CFR part 86, subpart R, and agrees to be legally bound by all of the standards, requirements and other provisions of the National LEV program. XX COMPANY commits not to challenge EPA's authority to establish or enforce the National LEV program, and commits not to seek to certify any vehicle except in compliance with the regulations in subpart R.

(2) The opt-in notification may indicate that the manufacturer opts into the program subject to either or both of the following conditions:

(i) That the Administrator finds under § 86.1706 that the National LEV program is in effect, to be indicated with the following language:

This opt-in is subject to the condition that the Administrator make a finding pursuant to 40 CFR 86.1706 that the National LEV program is in effect.

(ii) That certain states (limited to the OTC States) and/or motor vehicle manufacturers opt into National LEV pursuant to § 86.1705, to be indicated with the following language (language in brackets indicates that either or both formulations are acceptable):

This opt-in is subject to the condition that [each of the states of [list state names]/[and] each of the following manufacturers [list manufacturer names]] opt into National LEV pursuant to 40 CFR 86.1705.

(3) A manufacturer shall be considered to have opted in upon the Administrator's receipt of the opt-in notification and satisfaction of the conditions set forth in paragraph (c)(2) of this section, if applicable.

(d) *Covered states.* An OTC State shall be a covered state if:

(1) The state has opted into National LEV pursuant to paragraph (e) of this section;

(2) Where a state has included a condition on opt-in provided for in paragraph (e)(3)(viii) of this section, that condition has been satisfied; and

(3) The state has not opted out, pursuant to § 86.1707, or the state has opted out but that opt-out has not become effective under § 86.1707.

(e) *OTC State opt-ins.* To opt into the National LEV program, a state must submit an opt-in notification to the Administrator, with a copy to Director, Vehicle Programs and Compliance Division; U.S. Environmental Protection Agency; 2565 Plymouth Road; Ann Arbor, Michigan, 48105. The notification must contain the following or substantively identical language:

(1)(i) An Executive Order signed by the governor of the state (or the mayor of the District of Columbia) that unambiguously and unconditionally (apart from the permissible conditions set forth in this section) indicates the state's agreement to opt into the National LEV program and includes the following language (language in brackets indicates that either formulation is acceptable):

This Executive Order [commits STATE to/opts STATE into] the National Low Emission Vehicle (National LEV) program, in accordance with the EPA National LEV program regulations at 40 CFR part 86, subpart R.

I hereby direct HEAD OF APPROPRIATE STATE AGENCY to forward to EPA with my concurrence the [enclosed letter signed/enclosed letter and proposed regulations signed

and proposed] by the HEAD OF APPROPRIATE STATE AGENCY, which [specifies/specify] the details of STATE's commitment to the National LEV program.

I hereby direct APPROPRIATE STATE AGENCY to follow the procedures prescribed by the general statutes of STATE to take the necessary steps to adopt regulations and submit a state implementation plan (SIP) revision committing STATE to National LEV in accordance with the EPA National LEV program regulations on SIP revisions at 40 CFR part 86, subpart R, and with section 110 of the Clean Air Act and its implementing regulations at 40 CFR parts 51 and 52.

(ii) States with Existing ZEV Mandates may add language to the Executive Order submitted pursuant to this paragraph (e)(1) confirming that this opt-in will not affect the state's requirements pertaining to ZEVs.

(2)(i) If a state does not submit an Executive Order pursuant to paragraph (e)(1) of this section, a letter signed by the governor of the state (or the mayor of the District of Columbia) that unambiguously and unconditionally (apart from the permissible conditions set forth in this section) indicates the state's agreement to opt into the National LEV program and includes the following language (language in brackets indicates that either formulation is acceptable):

This submittal is made in accordance with the EPA National Low Emission Vehicle (National LEV) regulations at 40 CFR part 86, subpart R to [commit STATE to/opt STATE into] the National LEV program.

[I am forwarding to EPA the [enclosed letter signed enclosed letter and proposed regulations which were signed and proposed] by HEAD OF APPROPRIATE STATE AGENCY at my direction, and which [specifies/specify] the details of STATE's commitment to the National LEV program. I am forwarding to EPA and concur with the [enclosed letter signed/enclosed letter and proposed regulations signed and proposed] by HEAD OF APPROPRIATE STATE AGENCY, which [specifies/specify] the details of STATE's commitment to the National LEV program.]

I [hereby direct/have directed] APPROPRIATE STATE AGENCY to follow the procedures prescribed by the general statutes of STATE to take the necessary steps to adopt regulations and submit a state implementation plan (SIP) revision committing STATE to National LEV in accordance with the EPA National LEV regulations on SIP revisions at 40 CFR part 86, subpart R, and with section 110 of the Clean Air Act and its implementing regulations at 40 CFR parts 51 and 52.

(ii) States with Existing ZEV Mandates may add language to the letter submitted pursuant to this paragraph (e)(2) confirming that this opt-in will not affect the state's requirements pertaining to ZEVs.

(3) A letter signed by the head of the appropriate state agency that would unconditionally (except as set forth in this section) include the following:

(i) States without a Section 177 Program, or with a Section 177 Program but not an Existing ZEV Mandate, shall include the following language:

National LEV is designed as a compliance alternative for OTC State programs adopted pursuant to section 177 of the Clean Air Act that apply to passenger cars, light-duty trucks up through 6,000 pounds GVWR, and/or medium-duty vehicles from 6,001 to 14,000 pounds GVWR if designed to operate on gasoline, as these categories of motor vehicles are defined in the California Code of Regulations, Title 13, Division 3, Chapter 1, Article 1, Section 1900. For the duration of STATE's participation in National LEV, [STATE will allow manufacturers to / manufacturers may] comply with National LEV or equally stringent mandatory Federal standards in lieu of compliance with any program adopted by STATE pursuant to the authority provided in section 177 of the Clean Air Act applicable to the vehicle classes specified above, including any ZEV mandates. STATE's participation in National LEV extends until model year 2006, except as provided in 40 CFR 86.1707. If, no later than December 15, 2000, the US EPA does not adopt standards at least as stringent as the National LEV standards provided in 40 CFR part 86 subpart R that apply to new motor vehicles in model year 2004, 2005 or 2006, STATE's participation in National LEV extends only until model year 2004, except as provided in 40 CFR 86.1707.

For the duration of STATE's participation in National LEV, STATE [intends to/will] forbear from adopting and implementing a ZEV mandate effective before model year 2006.

(ii) States with a Section 177 Program and an Existing ZEV Mandate, shall include the following language:

National LEV is designed as a compliance alternative for OTC State programs adopted pursuant to section 177 of the Clean Air Act that apply to passenger cars, light-duty trucks up through 6,000 pounds GVWR, and medium-duty vehicles from 6,001 to 14,000

pounds GVWR if designed to operate on gasoline, as these categories of motor vehicles are defined in the California Code of Regulations, Title 13, Division 3, Chapter 1, Article 1, Section 1900. With the exception of any requirements pertaining to ZEVs, for the duration of STATE's participation in National LEV, [STATE will allow manufacturers to / manufacturers may] comply with National LEV or equally stringent mandatory Federal standards in lieu of compliance with any program adopted by STATE pursuant to the authority provided in section 177 of the Clean Air Act applicable to the vehicle classes specified above. STATE's participation in National LEV extends until model year 2006, except as provided in 40 CFR 86.1707. If, no later than December 15, 2000, the US EPA does not adopt standards at least as stringent as the National LEV standards provided in 40 CFR part 86 subpart R that apply to new motor vehicles in model year 2004, 2005 or 2006, STATE's participation in National LEV extends only until model year 2004, except as provided in 40 CFR 86.1707. Any existing or future requirement pertaining to ZEVs is not affected by STATE's acceptance of National LEV as a compliance alternative for other state requirements.

(iii) All states shall include the following language:

Based on EPA's determination in the preamble to the final National LEV rule [CITE], STATE believes that National LEV will achieve reductions of VOC and NO_X emissions that are equivalent to or greater than the reductions that would be achieved through OTC State adoption of California Low Emission Vehicle programs in the Ozone Transport Region.

(iv) All states shall include the following language:

STATE intends National LEV to be STATE's new motor vehicle emissions control program.

(v) All states shall include the following language:

STATE recognizes that motor vehicle manufacturers are committing to National LEV with the expectation that, until model year 2006 (or, under the circumstances specified above, model year 2004), the OTC States that commit to the National LEV program will allow National LEV as a compliance alternative for state programs adopted pursuant to the authority provided in section 177 of the Clean Air Act, applying to the vehicle classes specified above (except any requirements pertaining to ZEVs in states with Existing ZEV Mandates). It is our intent to abide by this commitment. [However, the provisions of this letter will not have the force of law until STATE adopts them as state regulations. / Regulations providing for STATE's opt-in to National LEV have been approved for proposed rulemaking by APPROPRIATE STATE AGENCY on [INSERT DATE]. However, they will not have the force and effect of law until they are approved as final regulations.] Adoption of state regulations and the contents of a final state implementation plan revision will be determined through a state rulemaking process pursuant to the state requirements at [CITE to STATE law] and Federal law. Also, STATE must comply with any subsequent STATE legislation that might affect this commitment.

(vi) All states shall include the following language:

If the manufacturers exit the National LEV program pursuant to the EPA National LEV regulations at 40 CFR 86.1707, STATE [acknowledges / provides in its proposed rule] that the transition from National LEV requirements to any STATE program adopted pursuant to the authority provided in section 177 of the Clean Air Act applying to the vehicle classes specified above, including any requirements pertaining to ZEVs (except any requirements pertaining to ZEVs in states with Existing ZEV Mandates), will proceed in accordance with the EPA National LEV regulations at 40 CFR 86.1707.

(vii) All states shall include the following language:

STATE supports the legitimacy of the National LEV program and EPA's authority to promulgate the National LEV regulations.

(viii) Any state may include the following language:

[This [commitment/opt-in] / As provided in the proposed regulations, STATE's opt-in] is conditioned on all motor vehicle manufacturers (listed in EPA regulations at 40 CFR 86.1706(c)) opting into National LEV and on EPA finding that National LEV is in effect pursuant to 40 CFR 86.1706.

(4) In lieu of statements described in paragraphs (e)(3)(i), (e)(3)(ii) and (e)(3)(vi) of this section, states may submit proposed regulations containing the provisions required under paragraphs (g)(1), (g)(2), (g)(3), and (g)(5) of this section.

(f) A state shall be considered to have opted in upon the Administrator's receipt of the opt-in notification and satisfaction of the conditions set forth in paragraph (e)(3)(viii) of this section, if applicable.

(g) Each OTC State that opts into National LEV pursuant to paragraph

(e) of this section shall submit a state implementation plan (SIP) revision within one year and seventy-five days of December 16, 1997 except for the District of Columbia, New Hampshire, Delaware, and Virginia, for which the deadline is 18 months and seventy-five days from December 16, 1997. The SIP revisions shall include the following using identical or substantively identical language:

(1) Covered states without any Section 177 Program, or with a Section 177 Program but not an Existing ZEV Mandate, shall submit regulations containing the following language:

For the duration of STATE's participation in National LEV, manufacturers may comply with National LEV or equally stringent mandatory Federal standards in lieu of compliance with any program, including any mandates for sales of zero emission vehicles (ZEVs), adopted by STATE pursuant to the authority provided in section 177 of the Clean Air Act applicable to passenger cars, light-duty trucks up through 6,000 pounds GVWR, and/or medium-duty vehicles from 6,001 to 14,000 pounds GVWR if designed to operate on gasoline, as these categories of motor vehicles are defined in the California Code of Regulations, Title 13, Division 3, Chapter 1, Article 1, Section 1900.

STATE's participation in National LEV extends until model year 2006, except as provided in 40 CFR 86.1707. If, no later than December 15, 2000, the US EPA does not adopt standards at least as stringent as the National LEV standards provided in 40 CFR part 86 subpart R that apply to new motor vehicles in model year 2004, 2005 or 2006, STATE's participation in National LEV extends only until model year 2004, except as provided in 40 CFR 86.1707.

(2) Covered states with a Section 177 Program and an Existing ZEV Mandate shall submit regulations containing the following language:

With the exception of any STATE requirements pertaining to zero emission vehicles (ZEVs), for the duration of STATE's participation in National LEV, manufacturers may comply with National LEV or equally stringent mandatory Federal standards in lieu of compliance with any program adopted by STATE pursuant to the authority provided in section 177 of the Clean Air Act applicable to passenger cars, light-duty trucks up through 6,000 pounds GVWR, and/or medium-duty vehicles from 6,001 to 14,000 pounds GVWR if designed to operate on gasoline, as these categories of motor vehicles are defined in the California Code of Regulations, Title 13, Division 3, Chapter 1, Article 1, Section 1900.

STATE's participation in National LEV extends until model year 2006, except as provided in 40 CFR 86.1707. If, no later than December 15, 2000, the US EPA does not adopt standards at least as stringent as the National LEV standards provided in 40 CFR part 86 subpart R that apply to new motor vehicles in model year 2004, 2005 or 2006, STATE's participation in National LEV extends only until model year 2004, except as provided in 40 CFR 86.1707.

Any existing or future STATE requirement pertaining to ZEVs is not affected by STATE's acceptance of National LEV as a compliance alternative for other state requirements.

(3) All covered states shall submit regulations containing the following language:

If a covered manufacturer, as defined at 40 CFR 86.1702, opts out of the National LEV program pursuant to the EPA National LEV regulations at 40 CFR 86.1707, the transition from National LEV requirements to any STATE section 177 program applicable to passenger cars, light-duty trucks up through 6,000 pounds GVWR, and/ or medium-duty vehicles from 6,001 to 14,000 pounds GVWR if designed to operate on gasoline, as these categories of motor vehicles are defined in the California Code of Regulations, Title 13, Division 3, Chapter 1, Article 1, Section 1900, will proceed in accordance with the EPA National LEV regulations at 40 CFR 86.1707.

(4) All covered states shall accompany the regulatory language with the following language:

STATE commits to support National LEV as an acceptable alternative to state Section 177 Programs for the duration of STATE's participation in National LEV.

STATE recognizes that its commitment to National LEV is necessary to ensure that National LEV remain in effect.

STATE is submitting this SIP revision in accordance with the applicable Clean Air Act requirements at section 110 and EPA regulations at 40 CFR part 86 and 40 CFR Parts 51 and 52.

(5) States without Existing ZEV Mandates shall accompany the regulatory language with the following language:

For the duration of STATE's participation in National LEV, STATE [intends to / will] forbear from adopting and implementing a ZEV mandate effective prior to model year 2006. Notwithstanding the previous sentence, if, no later than December 15, 2000, the US EPA does not adopt standards at least as

stringent as the National LEV standards provided in 40 CFR part 86 subpart R that apply to new motor vehicles in model year 2004, 2005 or 2006, STATE [intends to / will] forbear from adopting and implementing a ZEV mandate effective prior to model year 2004.

[62 FR 31242, June 6, 1997. Redesignated and amended at 63 FR 967, Jan. 7, 1998]

§ 86.1706–99 National LEV program in effect.

(a) No later than March 2, 1998, EPA shall issue a finding as to whether National LEV is in effect. EPA shall base this finding on opt-in notifications from OTC States submitted pursuant to § 86.1705(e) and received by EPA January 30, 1998, and on opt-in notifications from manufacturers submitted pursuant to § 86.1705(c) and received by EPA February 17, 1998.

(b) EPA shall find that the National LEV program is in effect and shall subsequently publish this determination if the following conditions have been met:

(1) All manufacturers listed in paragraph (c) of this section have lawfully opted in pursuant to § 86.1705(c) and any conditions placed on the opt-ins allowed under § 86.1705(c)(2) have been met (apart from a condition that EPA find the National LEV program in effect);

(2) Each OTC State that opts in has lawfully opted in pursuant to § 86.1705(e) and any conditions placed on opt-ins by OTC States that are allowed under § 86.1705(e)(3)(viii) have been met (apart from a condition that EPA find the National LEV program in effect); and

(3) No valid opt-out has become effective pursuant to § 86.1707.

(c) List of manufacturers of light-duty vehicles and light-duty trucks:

American Honda Motor Company, Inc.
American Suzuki Motor Corporation
BMW of North America, Inc.
Chrysler Corporation
Fiat Auto U.S.A., Inc.
Ford Motor Company
General Motors Corporation
Hyundai Motor America
Isuzu Motors America, Inc.
Jaguar Motors Ltd.
Kia Motors America, Inc.
Land Rover North America, Inc.
Mazda (North America) Inc.
Mercedes-Benz of North America
Mitsubishi Motor Sales of America, Inc.
Nissan North America, Inc.
Porsche Cars of North America, Inc.
Rolls-Royce Motor Cars Inc.
Saab Cars USA, Inc.
Subaru of America, Inc.
Toyota Motor Sales, U.S.A., Inc.
Volkswagen of America, Inc.
Volvo North America Corporation

[63 FR 969, Jan. 7, 1998]

§ 86.1707–99 General provisions; opt-outs.

A covered manufacturer or covered state may opt out of the National LEV program only according to the provisions of this section. Vehicles certified under the National LEV program must continue to meet the standards to which they were certified, regardless of whether the manufacturer of those vehicles remains a covered manufacturer. A manufacturer that has opted out remains responsible for any debits outstanding on the effective date of opt-out, pursuant to § 86.1710(d)(3).

(a) *Procedures for opt-outs—manufacturers.* To opt out of the National LEV program, a covered manufacturer must notify the Administrator as provided in § 86.1705(c)(1), except that the notification shall specify the condition and final action allowing opt-out, indicate the manufacturer's intent to opt out of the program and no longer be subject to the provisions in this subpart, and specify an effective date for the opt-out. The effective date shall be specified in terms of the first model year for which the opt-out shall be effective, but shall be no earlier than the applicable date indicated in paragraphs (d) through (j) of this section. For an opt-out pursuant to paragraph (d) of this section, the manufacturer shall specify the revision triggering the opt-out and shall also provide evidence that the triggering revision does not harmonize the standard or requirement with a comparable California standard or requirement, if applicable, or that the triggering revision has increased the stringency of the revised standard or requirement, if applicable. The notification shall include the following language:

XX COMPANY, its subsidiaries, successors and assigns hereby opt out of the voluntary National LEV program, as set forth in 40 CFR part 86, subpart R.

(b) *Procedures for opt-outs—OTC states.* To opt out of the National LEV program, a covered state must notify the Administrator through a written statement from the head of the appropriate state agency. A copy of the notification shall be sent to the Director, Vehicle Programs and Compliance Division; U.S. Environmental Protection Agency; 2565 Plymouth Road; Ann Arbor, Michigan, 48105. The notification shall specify the final action allowing opt-out, indicate the state's intent to opt out of the program and no longer be subject to the provisions in this subpart, and specify an effective date for the opt-out. The effective date shall be specified in terms of the first model year for which the opt-out shall be effective, but shall be no earlier than the applicable date indicated in paragraphs (d) through (k) of this section. The notification shall include the following language:

STATE hereby opts out of the voluntary National LEV program, as set forth in 40 CFR part 86, subpart R.

(c) *Procedures for opt-outs—EPA notification.* Upon receipt of an opt-out notification under this section, EPA shall promptly notify the covered states and covered manufacturers of the opt-out. Publication in the FEDERAL REGISTER of notice of receipt of the opt-out notification is sufficient but not necessary to meet EPA's obligation to notify covered states and covered manufacturers.

(d) *Conditions allowing manufacturer opt-outs—change to Stable Standards.* A covered manufacturer may opt out if EPA promulgates a final rule or takes other final agency action making a revision not specified in paragraph (d)(9)(iii) of this section to a standard or requirement listed in paragraph (d)(9)(i) of this section and the covered manufacturer objects to the revision.

(1) A covered manufacturer may opt out within 180 calendar days of the EPA action allowing opt-out under this paragraph (d). A valid opt-out based on a revision to a Core Stable Standard shall be effective no earlier than the model year named for the calendar year following the calendar year in which EPA receives the manufacturer's opt-out notification. A valid opt-out based on a revision to a Non-Core Stable Standard may become effective no earlier than the first model year to which that revision applies.

(i) Only a covered manufacturer that objects to a revision may opt out if EPA adopts that revision, except that if such a manufacturer opts out, other manufacturers that did not object to the revision may also opt out pursuant to paragraph (j) of this section. An objection shall be sufficient for this purpose only if it was filed during the public comment period on the proposed revision and the objection states that the proposed revision is sufficiently significant to allow opt-out under this paragraph (d).

(ii) [Reserved]

(2) Within sixty days of receipt of an opt-out notification under this paragraph (d), EPA shall determine whether the opt-out is valid by determining whether the alleged condition allowing opt-out has occurred and whether the opt-out complies with the requirements under paragraphs (a) and (d) of this section. An EPA determination regarding the validity of an opt-out is not a rule, but is a nationally applicable final agency action subject to judicial review pursuant to section 307(b) of the Clean Air Act (42 U.S.C. 7607(b)).

(3) A manufacturer that has submitted an opt-out notification to EPA under this paragraph (d) remains a covered manufacturer until the opt-out has come into effect under paragraph (d)(1) of this section and EPA or a reviewing court determines that the opt-out is valid.

(4) In the event that a manufacturer petitions for judicial review of an EPA determination that an opt-out is invalid, the manufacturer remains a covered manufacturer until final judicial resolution of the petition. Pending resolution of the petition, and starting with the model year for which the opt-out would have come into effect under paragraph (d)(1) of this section if EPA had determined the opt-out was valid, the manufacturer may certify vehicles to any standards in this part applicable to vehicles certified in that model year and sell such vehicles without regard to the limitations contained in § 86.1711. However, if the opt-out is finally determined to be invalid, the manufacturer will be liable for any

failure to comply with §§ 86.1710 through 86.1712.

(5) Upon the effective date of a manufacturer's opt-out under this paragraph (d), that manufacturer shall be subject to all requirements (except ZEV Mandates) that would apply to a manufacturer that had not opted into the National LEV program, including all applicable standards and other requirements promulgated under title II of the Clean Air Act (42 U.S.C. 7521 *et seq.*) and any state standards and other requirements (except ZEV Mandates) in effect pursuant to section 177 of the Clean Air Act (42 U.S.C. 7507). For any state Section 177 Program that allowed National LEV as a compliance alternative and was adopted at least two years before the effective date of a manufacturer's opt-out, a manufacturer waives its right under section 177 of the Clean Air Act to two years of lead time to the extent that the effective date of its opt-out provides for less than two years of lead time and to the extent such a waiver is necessary. With respect to ZEV Mandates, the manufacturer will not be deemed to have waived its two-year lead time under section 177 of the Clean Air Act. A manufacturer shall not be subject to any ZEV Mandates (except Existing ZEV Mandates) in OTC States until the model year (as defined in part 85, subpart X) that commences two years after the date of EPA's receipt of the manufacturer's opt-out notice.

(6) If a covered manufacturer opts out under this paragraph (d), any covered state that is not a violating state under paragraph (e), (f), (g) or (h) of this section may opt out within 90 calendar days of the date of either an EPA finding that the opt-out is valid, or a judicial ruling that a disputed opt-out is valid. The state's opt-out notification shall specify an effective date for the state's opt-out no earlier than two calendar years after the date of EPA's receipt of the state's opt-out notification and shall provide that the opt out is not effective for model years (as defined in part 85, subpart X) that commence prior to this effective date.

(7) In a state that opts out pursuant to paragraph (d)(6) of this section, obligations under National LEV shall be unaffected for covered manufacturers until the effective date of the state's opt-out. Upon the effective date of the state's opt-out, in that state covered manufacturers shall comply with any state standards and other requirements in effect pursuant to section 177 of the Clean Air Act or, if such state standards are not in effect, with all requirements that would apply to a manufacturer that had not opted into the National LEV program, including all applicable standards and other requirements promulgated under title II of the Clean Air Act (42 U.S.C. 7521 *et seq.*).

(8) In a state that has not opted out, obligations under National LEV shall be unaffected for covered manufacturers.

(9)(i) The following are the emissions standards and requirements that, if revised, may provide covered manufacturers the opportunity to opt out pursuant to paragraph (d)(1) of this section:

(A) The tailpipe emissions standards for NMOG, NO_X, CO, HCHO, and PM specified in § 86.1708(b) and (c) and § 86.1709(b) and (c);

(B) Fleet average NMOG standards and averaging, banking and trading provisions specified in § 86.1710;

(C) Provisions regarding limitations on sale of Tier 1 vehicles and TLEVs contained in § 86.1711;

(D) The compliance test procedure (Federal Test Procedure) as specified in subparts A and B of this part, as used for determining compliance with the exhaust emission standards specified in § 86.1708(b) and (c) and § 86.1709(b) and (c);

(E) The compliance test fuel, as specified in § 86.1771;

(F) The definition of low volume manufacturer specified in § 86.1702;

(G) The on-board diagnostic system requirements specified in § 86.1717;

(H) The light-duty vehicle refueling emissions standards and provisions specified in § 86.099–8(d), and the light-duty truck refueling emissions standards and provisions specified in § 86.001–9(d);

(I) The cold temperature carbon monoxide standards and provisions for light-duty vehicles specified in § 86.099–8(k), and for light light-duty trucks specified in § 86.099–9(k);

(J) The evaporative emissions standards and provisions for light-duty vehicles specified in § 86.099–8(b), and the evaporative emissions standards and provisions for light light-duty trucks specified in § 86.099–9(b);

(K) The reactivity adjustment factors and procedures specified in § 86.1777(d);

(L) The Supplemental Federal Test Procedure, standards and phase-in schedules specified in §§ 86.1708(e), 86.1709(e), 86.127(f) and (g), 86.129(e) and (f), 86.130(e), 86.131(f), 86.132(n) and (o), 86.158, 86.159, 86.160, 86.161, 86.162, 86.163, 86.164, and Appendix I to this part, paragraphs (g) and (h).

(ii) The standards and requirements listed in paragraphs (d)(9)(i)(A) through (d)(9)(i)(F) of this section are the ''Core Stable Standards''; the standards and requirements listed in paragraphs (d)(9)(i)(G) through (d)(9)(i)(L) of this section are the ''Non-Core Stable Standards.''

(iii) The following types of revisions to the Stable Standards listed in paragraph (d)(9)(i) of this section do not provide covered manufacturers the right to opt out of the National LEV program:

(A) Revisions to which covered manufacturers do not object;

(B) Revisions to a Non-Core Stable Standard that do not increase the overall stringency of the standard or requirement;

(C) Revisions to a Non-Core Stable Standard that harmonize the standard or requirement with the comparable California standard or requirement for the same model year (even if the harmonization increases the stringency of the standard or requirement), provided that, if the relevant California factor is raised to 1.0 or higher, EPA can only raise to 1.0 any of the reactivity adjustment factors specified in 86.1777 applicable to gasoline meeting the specifications of 86.1771(a)(1); and

(D) Revisions to cold temperature carbon monoxide standards and provisions for light-duty vehicles (as specified in § 86.099–8(k)) and for light light-duty trucks (as specified in § 86.099–9(k)) that are effective after model year 2000.

(10) Promulgation by EPA of mandatory tailpipe standards and other related requirements effective model year 2004 or later does not provide an opportunity to opt out of the National LEV program.

(e) *Conditions allowing manufacturer opt-outs—state Section 177 Program that does not allow National LEV as a compliance alternative.* A covered manufacturer may opt out of National LEV if a covered state takes final action such that it has in its regulations or state law a state Section 177 Program and/or a ZEV Mandate (except in a state with an Existing ZEV Mandate), that does not allow National LEV as a compliance alternative for the duration of the state's commitment to the National LEV program. The state's commitment to National LEV extends until model year 2006. If, no later than December 15, 2000, EPA has not adopted standards at least as stringent as the National LEV standards provided in 40 CFR part 86, subpart R that apply to new motor vehicles in model year 2004, 2005 or 2006, the state's commitment to National LEV only extends until model year 2004. A manufacturer could opt out based on this condition even if the state regulations or law are contrary to an approved SIP revision committing the state to National LEV pursuant to § 86.1705(g). For purposes of this paragraph (e), such a state shall be called the ''violating state.''

(1) A covered manufacturer may opt out any time after the violating state takes such final action, provided that the violating state has not withdrawn or otherwise nullified the relevant final action prior to EPA's receipt of the opt-out notification. An opt-out under this paragraph (e) shall be effective no earlier than the model year named for the calendar year following the calendar year in which EPA receives the manufacturer's opt-out notification.

(2) As of the model year named for the calendar year following the calendar year of the violating state's final action, the violating state shall no longer be included in the applicable trading region for purposes of calculating covered manufacturers' compliance with the fleet average NMOG standards under § 86.1710, and § 86.1711 shall no longer apply to vehicles sold in the violating state. Beginning in that model year and until the violating

state's requirements become effective pursuant to sections 110(l) and 177 of the Clean Air Act or until the date specified in the following sentence, whichever is earlier, the National LEV program allows covered manufacturers to certify and produce for sale vehicles meeting the exhaust emission standards of § 86.096–8(a)(1)(i) and subsequent model year provisions or § 86.097–9(a)(1)(i) and subsequent model year provisions in the violating state. If the violating state withdraws or otherwise nullifies the relevant violating final action, vehicles sold in that state shall count towards the covered manufacturers' fleet NMOG standards under § 86.1710 and be subject to § 86.1711 as of the model year named for the second calendar year following the calendar year in which the violating state took the final action nullifying or withdrawing the final violating action, or as of the model year named for the fourth calendar year following the calendar year in which the violating state took the violating final action, whichever is later. The two-year lead time required by section 177 of the Clean Air Act for the state Section 177 Program or ZEV Mandate shall run from the date of the violating final action. Notwithstanding an earlier effective date of a manufacturer's opt-out under this paragraph (e), the manufacturer's opt-out is not effective in the violating state until the two-year lead time for the violating state's program has passed (which shall run from the date of the violating final action). For model years for which vehicles sold in the violating state do not count towards the National LEV NMOG average, in calculating emissions reductions from new motor vehicles creditable for state implementation plan requirements, the violating state's emissions reductions shall be based on the emission standards of §§ 86.096–8(a)(1)(i), 86.097–9(a)(1)(i) and subsequent model year provisions, and shall not be based on the National LEV standards, provided that vehicles sold in the violating state are certified to Tier 1 levels when sold in that state.

(3) Upon the effective date of a manufacturer's opt-out under this paragraph (e) in any covered state that is not a violating state under this paragraph (e), that manufacturer shall be subject to all requirements (except ZEV Mandates) that would apply to a manufacturer that had not opted into the National LEV program, including all applicable standards and other requirements promulgated under title II of the Clean Air Act and any state standards and other requirements (except ZEV Mandates) in effect pursuant to section 177 of the Clean Air Act (42 U.S.C. 7507). For any state Section 177 Program that allowed National LEV as a compliance alternative and was adopted by a non-violating state at least two years before the effective date of a manufacturer's opt-out, a manufacturer waives its right under section 177 of the Clean Air Act to two years of lead time to the extent that the effective date of its opt-out provides for less than two years of lead time and to the extent such a waiver is necessary. With respect to ZEV Mandates, the manufacturer will not be deemed to have waived its two-year lead time under section 177 of the Clean Air Act. A manufacturer shall not be subject to any ZEV Mandates (except Existing ZEV Mandates) in OTC States until the model year (as defined in part 85, subpart X) that commences two years after the date of EPA's receipt of the manufacturer's opt-out notice.

(4) If a covered manufacturer opts out under this paragraph (e), any covered state that is not a violating state under paragraph (e), (f), (g) or (h) of this section may opt out within 90 calendar days of EPA's receipt of the manufacturer's opt-out notification. The state's opt-out notification shall specify an effective date for the state's opt-out no earlier than two calendar years after the date of EPA's receipt of the state's opt-out notification and shall provide that the opt-out is not effective for model years (as defined in part 85, subpart X), that commence prior to this effective date.

(5) In a non-violating state that opts out pursuant to paragraph (e)(4) of this section, obligations under National LEV shall be unaffected for covered manufacturers until the effective date of the non-violating state's opt-out. Upon the effective date of the state's opt-out, in that state covered manufacturers shall comply with any state

standards and other requirements in effect pursuant to section 177 of the Clean Air Act or, if such state standards are not in effect, with all requirements that would apply to a manufacturer that had not opted into the National LEV program, including all applicable standards and other requirements promulgated under title II of the Clean Air Act (42 U.S.C. 7521 *et seq.*).

(6) In a non-violating state that has not opted out, obligations under National LEV shall be unaffected for covered manufacturers.

(f) *Conditions allowing manufacturer opt-outs—failure to submit SIP revision.* A covered manufacturer may opt out of National LEV if a covered state fails to submit a National LEV SIP revision on the date specified in § 86.1705(g). For purposes of this paragraph (f), such a state shall be called the ''violating state.''

(1) A covered manufacturer may opt out any time after the violating state misses the deadline for its National LEV SIP revision, provided that EPA has not received a National LEV SIP revision from the violating state prior to EPA's receipt of the manufacturer's opt-out notification. If a manufacturer opts out within 180 calendar days from the deadline for the state to submit its National LEV SIP revision, the opt-out must be conditioned on the state not submitting a National LEV SIP revision within 180 calendar days from the deadline for such SIP revision. If the state submits such a SIP revision within the 180-day period, any manufacturer opt-outs under this paragraph (f) would be invalidated and would not come into effect. An opt-out under this paragraph (f) shall be effective no earlier than model year 2000 (or model year 2001 if the violating state is the District of Columbia, New Hampshire, Delaware, or Virginia) or the model year named for the calendar year following the calendar year in which EPA receives the opt-out notification, whichever is later.

(2) For a manufacturer that opts out under this paragraph (f), as of model year 2000 (or model year 2001 if the violating state is the District of Columbia, New Hampshire, Delaware, or Virginia) or the model year named for the calendar year following the calendar year in which EPA receives the opt-out notification, whichever is later, the violating state shall no longer be included in the applicable trading region for purposes of calculating that manufacturer's compliance with the fleet average NMOG standards under § 86.1710 and the manufacturer does not have to comply with § 86.1711 for vehicles sold in the violating state. Beginning in that model year and until the manufacturer's opt-out becomes effective, the National LEV program allows a manufacturer that has opted out under this paragraph (f) to certify and produce for sale vehicles meeting the exhaust emission standards of § 86.096–8(a)(1)(i) and subsequent model year provisions or § 86.097–9(a)(1)(i) and subsequent model year provisions in the violating state. For model years in which vehicles sold in the violating state do not count towards the National LEV NMOG average, in calculating emission reductions from new motor vehicles creditable for state implementation plan requirements, the violating state's emissions reductions shall be based on the emissions standards of §§ 86.096–8(a)(1)(i), 86.097–9(a)(1)(i), and subsequent model year provisions, and shall not be based on the National LEV standards, provided that vehicles sold in the violating state are certified to Tier 1 levels when sold in that state. National LEV obligations in the violating state remain unchanged for those manufacturers that do not opt out based on this condition.

(3) Upon the effective date of a manufacturer's opt-out under this paragraph (f), in any covered state that is not a violating state under this paragraph (f), that manufacturer shall be subject to all requirements (except ZEV Mandates) that would apply to a manufacturer that had not opted into the National LEV program, including all applicable standards and other requirements promulgated under title II of the Clean Air Act and any state standards and other requirements (except ZEV Mandates) in effect pursuant to section 177 of the Clean Air Act (42 U.S.C. 7507). For any state Section 177 Program that allowed National LEV as a compliance alternative and was adopted by a non-

violating state at least two years before the effective date of a manufacturer's opt-out, a manufacturer waives its right under section 177 of the Clean Air Act to two years of lead time to the extent that the effective date of its opt-out provides for less than two years of lead time and to the extent such a waiver is necessary. With respect to ZEV Mandates, the manufacturer will not be deemed to have waived its two-year lead time under section 177 of the Clean Air Act. A manufacturer shall not be subject to any ZEV Mandates (except Existing ZEV Mandates) in OTC States until the model year (as defined in part 85, subpart X) that commences two years after the date of EPA's receipt of the manufacturer's opt-out notice.

(4) If a covered manufacturer opts out under this paragraph (f), any covered state that is not a violating state under paragraph (e), (f), (g) or (h) of this section may opt out within 90 calendar days of EPA's receipt of the manufacturer's opt-out notification. The state's opt-out notification shall specify an effective date for the state's opt-out no earlier than two calendar years after the date of EPA's receipt of the state's opt-out notification and shall provide that the opt-out is not effective for model years (as defined in part 85, subpart X), that commence prior to this effective date.

(5) In a non-violating state that opts out pursuant to paragraph (f)(4) of this section, obligations under National LEV shall be unaffected for covered manufacturers until the effective date of the non-violating state's opt-out. Upon the effective date of the state's opt-out, in that state covered manufacturers shall comply with any state standards and other requirements in effect pursuant to section 177 of the Clean Air Act or, if such state standards are not in effect, with all requirements that would apply to a manufacturer that had not opted into the National LEV program, including all applicable standards and other requirements promulgated under title II of the Clean Air Act (42 U.S.C. 7521 *et seq.*).

(6) In a non-violating state that has not opted out, obligations under National LEV shall be unaffected for covered manufacturers.

(g) *Conditions allowing manufacturer opt-outs—inadequate National LEV SIP submission.* A covered manufacturer may opt out of National LEV if EPA disapproves a covered state's National LEV SIP submission or finds that it fails to meet the requirements for a National LEV SIP revision set forth in § 86.1705(g) or if EPA has not taken final action regarding such a SIP submission and more than one year has passed since such SIP submission was submitted to EPA. For purposes of this paragraph (g), such a state shall be called the ''violating state.''

(1) A covered manufacturer may opt out any time after EPA has disapproved a state's National LEV SIP submission or found that it does not meet the requirements of § 86.1705(g), provided that EPA has not subsequently approved a revised National LEV SIP revision from that state and found that the SIP revision meets the requirements of § 86.1705(g). A covered manufacturer may also opt out any time after one year EPA's receipt of a state's National LEV SIP submission, provided that EPA has not approved the revision or has not found that the SIP revision meets the requirements of § 86.1705(g). An opt-out under this condition shall be effective no earlier than the model year named for the calendar year following the calendar year in which the EPA receives the manufacturer's opt-out notification.

(2) For a manufacturer that opts out under this paragraph (g), as of the model year named for the calendar year following the calendar year in which EPA receives the opt-out notification, the violating state shall no longer be included in the applicable trading region for purposes of calculating that manufacturer's compliance with the fleet average NMOG standards under § 86.1710 and the manufacturer does not have to comply with § 86.1711 for vehicles sold in the violating state. Beginning in that model year and until the manufacturer's opt-out becomes effective, the National LEV program allows a manufacturer that has opted out under this paragraph (g) to certify and produce for sale vehicles meeting the exhaust emission standards of § 86.096–8(a)(1)(i) and subsequent model year

provisions or § 86.097–9(a)(1)(i) and subsequent model year provisions in the violating state. For model years in which vehicles sold in the violating state do not count towards the National LEV NMOG average, in calculating emission reductions from new motor vehicles creditable for state implementation plan requirements, the violating state's emissions reductions shall be based on the emissions standards of §§ 86.096–8(a)(1)(i), 86.097–9(a)(1)(i), and subsequent model year provisions, and shall not be based on the National LEV standards, provided that vehicles sold in the violating state are certified to Tier 1 levels when sold in that state. National LEV obligations in the violating state remain unchanged for those manufacturers that do not opt out based on this condition.

(3) Upon the effective date of a manufacturer's opt-out under this paragraph (g), in any covered state that is not a violating state under this paragraph (g), that manufacturer shall be subject to all requirements (except ZEV Mandates) that would apply to a manufacturer that had not opted into the National LEV program, including all applicable standards and other requirements promulgated under title II of the Clean Air Act and any state standards and other requirements (except ZEV Mandates) in effect pursuant to section 177 of the Clean Air Act (42 U.S.C. 7507). For any state Section 177 Program that allowed National LEV as a compliance alternative and was adopted by a non-violating state at least two years before the effective date of a manufacturer's opt-out, a manufacturer waives its right under section 177 of the Clean Air Act to two years of lead time to the extent that the effective date of its opt-out provides for less than two years of lead time and to the extent such a waiver is necessary. With respect to ZEV Mandates, the manufacturer will not be deemed to have waived its two-year lead time under section 177 of the Clean Air Act. A manufacturer shall not be subject to any ZEV Mandates (except Existing ZEV Mandates) in OTC States until the model year (as defined in part 85, subpart X) that commences two years after the date of EPA's receipt of the manufacturer's opt-out notice.

(4) If a covered manufacturer opts out under this paragraph (g), any covered state that is not a violating state under paragraph (e), (f), (g) or (h) of this section may opt out within 90 calendar days of EPA's receipt of the manufacturer's opt-out notification. The state's opt-out notification shall specify an effective date for the state's opt-out that is no earlier than two calendar years after the date of EPA's receipt of the state's opt-out notification and shall provide that the opt-out is not effective for model years (as defined in part 85, subpart X that commence prior to this effective date.

(5) In a non-violating state that opts out pursuant to paragraph (g)(4) of this section, obligations under National LEV shall be unaffected for covered manufacturers until the effective date of the non-violating state's opt-out. Upon the effective date of the state's opt-out, in that state covered manufacturers shall comply with any state standards and other requirements in effect pursuant to section 177 of the Clean Air Act or, if such state standards are not in effect, with all requirements that would apply to a manufacturer that had not opted into the National LEV program, including all applicable standards and other requirements promulgated under title II of the Clean Air Act (42 U.S.C. 7521 *et seq.*).

(6) In a non-violating state that has not opted out, obligations under National LEV shall be unaffected for covered manufacturers.

(h) *Conditions allowing manufacturer opt-outs—adoption of a ZEV Mandate.* A covered manufacturer to which a ZEV Mandate might apply may opt out of National LEV if a covered state without an Existing ZEV Mandate takes final action such that it has in its regulations or state law a ZEV Mandate that allows National LEV as a compliance alternative that would be effective during the state's commitment to National LEV. For purposes of this paragraph (h), such a state shall be called the ''violating state.''

(1) A covered manufacturer may opt out any time after the violating state takes the final action, provided that the violating state has not withdrawn or otherwise nullified the relevant final action prior to EPA's receipt of

the opt-out notification. An opt-out under this opt-out condition shall be effective no earlier than the model year named for the calendar year following the calendar year in which EPA receives the manufacturer's opt-out notification.

(2) For a manufacturer that opts out under this paragraph (h), as of the model year named for the calendar year following the calendar year in which EPA receives the opt-out notification, the violating state shall no longer be included in the applicable trading region for purposes of calculating that manufacturer's compliance with the fleet average NMOG standards under § 86.1710 and the manufacturer does not have to comply with § 86.1711 for vehicles sold in the violating state. Beginning in that model year and until the manufacturer's opt-out becomes effective, the National LEV program allows a manufacturer that has opted out under this paragraph (h) to certify and produce for sale vehicles meeting the exhaust emission standards of § 86.096–8(a)(1)(i) and subsequent model year provisions or § 86.097–9(a)(1)(i) and subsequent model year provisions in the violating state. For model years in which vehicles sold in the violating state do not count towards the National LEV NMOG average, in calculating emission reductions from new motor vehicles creditable for state implementation plan requirements, the violating state's emissions reductions shall be based on the emissions standards of §§ 86.096–8(a)(1)(i), 86.097–9(a)(1)(i), and subsequent model year provisions, and shall not be based on the National LEV standards, provided that vehicles sold in the violating state are certified to Tier 1 levels when sold in that state. National LEV obligations in the violating state remain unchanged for those manufacturers that do not opt out based on this condition.

(3) Upon the effective date of a manufacturer's opt-out under this paragraph (h), in any covered state that is not a violating state under this paragraph (h), that manufacturer shall be subject to all requirements (except ZEV Mandates) that would apply to a manufacturer that had not opted into the National LEV program, including all applicable standards and other requirements promulgated under title II of the Clean Air Act and any state standards and other requirements (except ZEV Mandates) in effect pursuant to section 177 of the Clean Air Act (42 U.S.C. 7507). For any state Section 177 Program that allowed National LEV as a compliance alternative and was adopted by a non-violating state at least two years before the effective date of a manufacturer's opt-out, a manufacturer waives its right under section 177 of the Clean Air Act to two years of lead time to the extent that the effective date of its opt-out provides for less than two years of lead time and to the extent such a waiver is necessary. With respect to ZEV Mandates, the manufacturer will not be deemed to have waived its two-year lead time under section 177 of the Clean Air Act. A manufacturer shall not be subject to any ZEV Mandates (except Existing ZEV Mandates) in OTC States until the model year (as defined in part 85, subpart X) that commences two years after the date of EPA's receipt of the manufacturer's opt-out notice.

(4) If a covered manufacturer opts out under this paragraph (h), any covered state that is not a violating state under paragraph (e), (f), (g) or (h) of this section may opt out within 90 calendar days of EPA's receipt of the manufacturer's opt-out notification. The state's opt-out notification shall specify an effective date for the state's opt-out that is no earlier than two calendar years after the date of EPA's receipt of the state's opt-out notification and shall provide that the opt-out is not effective for model years (as defined in part 85, subpart X) that commence prior to this effective date.

(5) In a non-violating state that opts out pursuant to paragraph (h)(4) of this section, obligations under National LEV shall be unaffected for covered manufacturers until the effective date of the non-violating state's opt-out. Upon the effective date of the state's opt-out, in that state covered manufacturers shall comply with any state standards and other requirements in effect pursuant to section 177 of the

Clean Air Act or, if such state standards are not in effect, with all requirements that would apply to a manufacturer that had not opted into the National LEV program, including all applicable standards and other requirements promulgated under title II of the Clean Air Act (42 U.S.C. 7521 *et seq.*).

(6) In a non-violating state that has not opted out, obligations under National LEV shall be unaffected for covered manufacturers.

(i) *Conditions allowing manufacturer opt-outs—EPA failure to consider in-use fuel issues.* A covered manufacturer may opt out of National LEV if EPA does not meet its obligations related to fuel sulfur effects, as those obligations are set forth in paragraph (i)(7) of this section.

(1) A manufacturer may request in writing that EPA consider taking a specific action with regard to a fuel sulfur effect described in paragraph (i)(7) of this section. The request must identify the alleged fuel sulfur related problem, demonstrate that the problem exists and is caused by in-use fuel sulfur levels, ask EPA to consider taking a specific action, and demonstrate the emissions impact of the requested change. Within 60 calendar days of EPA's receipt of the manufacturer's request, EPA must consider the manufacturer's request and respond to it in writing, stating the Agency's decision and explaining the basis for the decision. The date of EPA's response is the date the response is signed.

(2) If EPA fails to respond to a manufacturer's request within the time provided, the covered manufacturer that submitted the request may opt out within 180 calendar days of the deadline for the EPA response. (If such a manufacturer opts out, other manufacturers that did not submit requests may also opt out pursuant to paragraph (j) of this section.) An opt-out notification under this paragraph (i) is not valid if received by EPA after EPA responds to the request, even if EPA responds after the expiration of the 60-day EPA deadline. An opt-out under this paragraph (i) shall be effective no earlier than the model year named for the calendar year following the calendar year in which EPA receives the manufacturer's opt-out notification.

(3) Upon the effective date of a manufacturer's opt-out under this paragraph (i), the manufacturer shall be subject to all requirements (except ZEV Mandates) that would apply to a manufacturer that had not opted into the National LEV program, including all applicable standards and other requirements promulgated under title II of the Clean Air Act (42 U.S.C. 7521 *et seq.*) and any state standards and other requirements (except ZEV Mandates) in effect pursuant to section 177 of the Clean Air Act (42 U.S.C. 7507). For any state Section 177 Program that allowed National LEV as a compliance alternative and was adopted at least two years before the effective date of a manufacturer's opt-out, a manufacturer waives its right under section 177 of the Clean Air Act to two years of lead time to the extent that the effective date of its opt-out provides for less than two years of lead time and to the extent such a waiver is necessary. With respect to ZEV Mandates, the manufacturer will not be deemed to have waived its two-year lead time under section 177 of the Clean Air Act. A manufacturer shall not be subject to any ZEV Mandates (except Existing ZEV Mandates) in OTC States until the model year (as defined in part 85, subpart X) that commences two years after the date of EPA's receipt of the manufacturer's opt-out notice.

(4) If a covered manufacturer opts out under this paragraph (i), any covered state that is not a violating state under paragraph (e), (f), (g) or (h) of this section may opt out within 90 calendar days of EPA's receipt of the manufacturer's opt-out notification. The state's opt-out notification shall specify an effective date for the state's opt-out that is no earlier than two calendar years after the date of EPA's receipt of the state's opt-out notification and shall provide that the opt out is not effective for model years (as defined in part 85, subpart X), that commence prior to this effective date.

(5) In a state that opts out pursuant to paragraph (i)(4) of this section, obligations under National LEV shall be unaffected for covered manufacturers until the effective date of the state's opt-out. Upon the effective date of the state's opt-out, in that state covered

manufacturers shall comply with any state standards and other requirements in effect pursuant to section 177 of the Clean Air Act or, if such state standards are not in effect, with all requirements that would apply to a manufacturer that had not opted into the National LEV program, including all applicable standards and other requirements promulgated under title II of the Clean Air Act (42 U.S.C. 7521 *et seq.*).

(6) In a state that has not opted out, obligations under National LEV shall be unaffected for covered manufacturers.

(7) Following are the actions that a manufacturer may request EPA to consider under paragraph (i)(1) of this section:

(i) During the certification process and upon a manufacturer's written request, EPA will consider allowing the use of an on-board diagnostic system (as required by § 86.1717), that functions properly on low sulfur gasoline, but indicates sulfur-induced passes when exposed to high sulfur gasoline.

(ii) Upon a manufacturer's written request, if vehicles exhibit illuminations of the emission control diagnostic system malfunction indicator light (as defined in § 86.094–17(c)) due to high sulfur gasoline, EPA will consider allowing modifications to such vehicles on a case-by-case basis so as to eliminate the sulfur-induced illumination.

(iii) Upon a manufacturer's written request, prior to in-use testing, that presents information to EPA regarding pre-conditioning procedures designed solely to remove the effects of high sulfur from currently available gasoline, EPA will consider allowing such procedures on a case-by-case basis.

(j) *Conditions allowing manufacturer opt-outs—OTC State or manufacturer opts out.* A covered manufacturer may opt out of National LEV if a covered state or another covered manufacturer opts out of the National LEV program pursuant to this section.

(1) If a covered manufacturer's opt-out under this paragraph (j) is based on a covered state's or covered manufacturer's opt-out under paragraph (e), (f), (g), (h), (i), (j) or (k) of this section, the manufacturer may opt out within 90 calendar days of EPA's receipt of the underlying state's or manufacturer's opt-out notification. If a manufacturer's opt-out under this paragraph (j) is based on a manufacturer's opt-out under paragraph (d) of this section, the manufacturer may only opt out within 90 calendar days of the date of either an EPA finding or a judicial ruling that the opt-out under paragraph (d) of this section is valid. An opt-out under this paragraph (j) shall be effective no earlier than the model year named for the calendar year following the calendar year in which the EPA receives the manufacturer's opt-out notification.

(2) Upon the effective date of a manufacturer's opt-out under this paragraph (j), in any covered state that manufacturer shall be subject to all requirements (except ZEV Mandates) that would apply to a manufacturer that had not opted into National LEV, including all applicable standards and other requirements promulgated under title II of the Clean Air Act and any state standards and other requirements (except ZEV Mandates) in effect pursuant to section 177 of the Clean Air Act (42 U.S.C. 7507). For any state Section 177 Program that allowed National LEV as a compliance alternative and was adopted at least two years before the effective date of a manufacturer's opt-out, a manufacturer waives its right under section 177 of the Clean Air Act to two years of lead time to the extent that the effective date of its opt-out provides for less than two years of lead time and to the extent such a waiver is necessary. With respect to ZEV Mandates, the manufacturer will not be deemed to have waived its two-year lead time under section 177 of the Clean Air Act. A manufacturer shall not be subject to any ZEV Mandates (except Existing ZEV Mandates) in OTC States until the model year (as defined in part 85, subpart X) that commences two years after the date of EPA's receipt of the manufacturer's opt-out notice.

(3) If a covered manufacturer opts out under this paragraph (j), any covered state that is not a violating state under paragraph (e), (f), (g) or (h) of this section may opt out within 90 calendar days of EPA's receipt of the manufacturer's opt-out notification. The state's opt-out notification shall

specify an effective date for the state's opt-out no earlier than two calendar years after the date of EPA's receipt of the state's opt-out notification and shall provide that the opt-out is not effective for model years (as defined in part 85, subpart X), that commence prior to this effective date.

(4) In a state that opts out pursuant to paragraph (j)(3) of this section, obligations under National LEV shall be unaffected for covered manufacturers until the effective date of the state's opt-out. Upon the effective date of the state's opt-out, in that state covered manufacturers shall comply with any state standards and other requirements in effect pursuant to section 177 of the Clean Air Act or, if such state standards are not in effect, with all requirements that would apply to a manufacturer that had not opted into the National LEV program, including all applicable standards and other requirements promulgated under title II of the Clean Air Act (42 U.S.C. 7521 *et seq.*).

(5) In a state that has not opted out, obligations under National LEV remain unaffected for covered manufacturers.

(k) *Conditions allowing OTC State opt-outs—EPA finding of inequivalency.* Any covered state may opt out of National LEV if EPA determines that National LEV would not produce (or is not producing) emissions reductions at least equivalent to the OTC State Section 177 Programs.

(1) At any time during National LEV, a covered state may request in writing that EPA reevaluate its initial equivalency determination (of December 16, 1997) that National LEV would produce emissions reductions at least equivalent to the OTC State Section 177 Programs that would be operative in the absence of National LEV. Within 180 calendar days of receipt of the state's request, EPA must take final agency action to determine whether the determination that National LEV will produce at least equivalent emission reductions to OTC State Section 177 Program is still valid. These EPA determinations are not rules, but are nationally applicable final agency actions subject to judicial review pursuant to section 307(b) of the Clean Air Act (42 U.S.C. 7607(b)). In reevaluating its equivalency determination, EPA shall use the same Mobile emission factor model and the same inputs and assumptions (including vehicle miles traveled, MOBILE5a model inputs, inspection and maintenance programs, reformulated gasoline, and permanent migration effects) as used in the initial determination, with the following exceptions:

(i) In modeling the emission reductions from National LEV, EPA shall use any revised federal new motor vehicle standard or other requirement in place of the standard or other requirement as it existed when EPA made its initial determination; and, to the extent that the modeling reflects EPA's implementation of federal new motor vehicle standards or other requirements, EPA shall take any changes in such implementation into account.

(ii) In modeling the emissions reductions that would be achieved through the OTC State Section 177 Programs that would apply in the absence of National LEV, EPA shall take into account all Section 177 Programs adopted by OTC States (including programs that allow National LEV as a compliance alternative) that had been adopted subsequent to EPA's initial equivalency determination. In accounting for the emissions effect of OTC State Section 177 Programs, EPA shall continue to assume that all OTC State Section 177 Programs have the same substantive requirements used in EPA's initial equivalency determination and shall not model any effects of state regulation of medium-duty vehicles (as defined in the California Code of Regulations, Title 13, Division 3, Chapter 1, Article 1, Section 1900).

(2) A covered state may opt out of National LEV within 90 calendar days of a final EPA determination pursuant to paragraph (k)(1) of this section that National LEV would not produce (or is not producing) emissions reductions at least equivalent to OTC State Section 177 Programs. The state's opt-out notification shall specify an effective date for the state's opt-out that is no earlier than two calendar years after the date of EPA's receipt of the state's opt-out notification and shall provide that the opt-out is not effective for model years

(as defined in part 85, subpart X), that commence prior to this effective date.

(3) If a covered state opts out based on this condition, a covered manufacturer may opt out of National LEV pursuant to paragraph (j) of this section.

(4) In a state that opts out pursuant to paragraph (k)(1) of this section, obligations under National LEV shall be unaffected for covered manufacturers until the effective date of that state's opt-out. Upon the effective date of the state's opt-out, in that state covered manufacturers shall comply with any state standards and other requirements in effect pursuant to section 177 of the Clean Air Act or, if such state standards and other requirements are not in effect, with all requirements that would apply to a manufacturer that had not opted into the National LEV program, including all applicable standards and other requirements promulgated under title II of the Clean Air Act (42 U.S.C. 7521 *et seq.*).

[63 FR 970, Jan. 7, 1998]

§ 86.1708–99 Exhaust emission standards for 1999 and later light-duty vehicles.

(a) Light-duty vehicles certified under the provisions of this subpart shall comply with the applicable exhaust emission standards in this section. In addition to the exhaust emission standards in this section, light-duty vehicles certified under the provisions of this subpart shall comply with all applicable emission standards and requirements in § 86.096–8 and subsequent model year provisions.

(1) Light-duty vehicles that meet the exhaust emission standards in this section are deemed to be in compliance with all the exhaust emission standards in § 86.096–8(a)(1)(i) and subsequent model year provisions, except for the emission standards and test procedures for total hydrocarbon (THC), particulate matter (PM), and high altitude conditions. Diesel light-duty vehicles that meet the PM standard in this section are deemed to be in compliance with the PM standard in § 86.096–8 and subsequent model year provisions.

(b)(1) *Standards.* (i) Exhaust emissions from 1999 and later model year light-duty vehicles classified as TLEVs, LEVs, and ULEVs shall not exceed the standards in Tables R99–1 and R99–2 in rows designated with the applicable vehicle emission category. These standards shall apply equally to certification and in-use vehicles, except as provided in paragraph (c) of this section. The tables follow:

TABLE R99–1—INTERMEDIATE USEFUL LIFE (50,000 MILE) STANDARDS (G/MI) FOR LIGHT-DUTY VEHICLES CLASSIFIED AS TLEVS, LEVS, AND ULEVS

Vehicle emission category	NMOG	CO	NO_X	HCHO
TLEV	0.125	3.4	0.4	0.015
LEV	0.075	3.4	0.2	0.015
ULEV	0.040	1.7	0.2	0.008

TABLE R99–2—FULL USEFUL LIFE (100,000 MILE) STANDARDS (G/MI) FOR LIGHT-DUTY VEHICLES CLASSIFIED AS TLEVS, LEVS, AND ULEVS

Vehicle emission category	NMOG	CO	NO_X	HCHO	PM (diesels only)
TLEV	0.156	4.2	0.6	0.018	0.08
LEV	0.090	4.2	0.3	0.018	0.08
ULEV	0.055	2.1	0.3	0.011	0.04

(ii) *Diesel vehicles.* The particulate matter (PM) standards in paragraph (b)(1)(i) of this section are applicable to diesel light-duty vehicles only. For diesel vehicles certifying to the standards set forth in paragraph (b)(1)(i) of this section, ''NMOG'' shall mean nonmethane hydrocarbons.

(iii) *NMOG standards for flexible-fuel and dual-fuel light-duty vehicles.* Flexible-fuel and dual-fuel light-duty vehicles shall be certified to exhaust emission standards for NMOG established both for the operation of the vehicle on an available fuel other than gasoline and for the operation of the vehicle on gasoline as specified in § 86.1771.

(A) The applicable NMOG emission standards for flexible-fuel and dual-fuel light-duty vehicles when certifying the vehicle for operation on fuels other than gasoline shall be the NMOG standards in paragraph (b)(1)(i) of this section.

(B) The applicable NMOG emission standards for flexible-fuel and dual-fuel light-duty vehicles when certifying the vehicle for operation on gasoline shall be the NMOG standards in Tables R99–3 and R99–4 in the rows designated with the applicable vehicle emission category, as follows:

TABLE R99–3—INTERMEDIATE USEFUL LIFE (50,000 MILE) NMOG STANDARDS (G/MI) FOR FLEXIBLE-FUEL AND DUAL-FUEL LIGHT-DUTY VEHICLES CLASSIFIED AS TLEVS, LEVS, AND ULEVS

Vehicle emission category	NMOG
TLEV	0.25
LEV	0.125
ULEV	0.075

TABLE R99–4—FULL USEFUL LIFE (100,000 MILE) NMOG STANDARDS (G/MI) FOR FLEXIBLE-FUEL AND DUAL-FUEL LIGHT-DUTY VEHICLES CLASSIFIED AS TLEVS, LEVS, AND ULEVS

Vehicle emission category	NMOG
TLEV	0.31
LEV	0.156
ULEV	0.090

(iv) *Highway NO_X.* The maximum projected NO_X emissions measured on the federal Highway Fuel Economy Test in 40 CFR part 600, subpart B, shall not be greater than 1.33 times the applicable light-duty vehicle standards shown in tables R99–1 and R99–2. Both the projected emissions and the Highway Fuel Economy Test standard shall be rounded to the nearest 0.1 g/mi in accordance with the Rounding-Off Method specified in ASTM E29–90, Standard Practice for Using Significant Digits in Test Data to Determine Conformance with Specifications, before being compared. These procedures are incorporated by reference (see § 86.1).

(v) *Hybrid electric vehicle requirements.* Deterioration factors for hybrid electric vehicles shall be based on the emissions and mileage accumulation of the auxiliary power unit. For certification purposes only, Type A hybrid electric vehicles shall demonstrate compliance with 50,000 mile emission standards (using 50,000 mile deterioration factors), and shall not be required to demonstrate compliance with 100,000 mile emission standards. For certification purposes only, Type B hybrid electric vehicles shall demonstrate compliance with 50,000 mile emission standards (using 50,000 mile deterioration factors) and 100,000 mile emission standards (using 75,000 mile deterioration factors). For certification purposes only, Type C hybrid electric vehicles shall demonstrate compliance with 50,000 mile emission standards (using 50,000 mile deterioration factors) and 100,000 mile emission standards (using 100,000 mile deterioration factors).

(vi) *50 degree F requirements.* Light-duty vehicles shall comply with the emission standards for NMOG, CO, NO_X, and HCHO in paragraph (b)(1)(i) of this section at 50 °F, according to the procedure specified in § 86.1773. Hybrid electric, natural gas, and diesel fueled vehicles are not required to comply with the provisions of this paragraph (b)(1)(vi).

(2) [Reserved]

(c) *In-use emission standards.* (1) 1999 model year light-duty vehicles certified as LEVs and 1999 through 2002 model year light-duty vehicles certified as ULEVs shall meet the applicable intermediate and full useful life in-use standards in paragraph (c)(2) of this section, according to the following provisions:

(i) [Reserved]

(ii) The applicable in-use emission standards for vehicle emission categories and model years not shown in Tables R99–5 and R99–6 shall be the intermediate and full useful life standards in paragraph (b) of this section.

(2) Light-duty vehicles, including flexible-fuel and dual-fuel light-duty vehicles when operated on gasoline and

on an available fuel other than gasoline, shall meet all intermediate and full useful life in-use standards for the applicable vehicle emission category and model year in Tables R99–5 and R99–6, as follows:

TABLE R99–5—INTERMEDIATE USEFUL LIFE (50,000 MILE) IN-USE STANDARDS (G/MI) FOR LIGHT-DUTY VEHICLES

Vehicle emission category	Model year	NMOG	CO	NO_X	HCHO
LEV	1999	0.100	3.4	0.3	0.015
ULEV	1999–2002	0.055	2.1	0.3	0.008

TABLE R99–6—FULL USEFUL LIFE (100,000 MILE) IN-USE STANDARDS (G/MI) FOR LIGHT-DUTY VEHICLES

Vehicle emission category	Model year	NMOG	CO	NO_X	HCHO
LEV	1999	0.125	4.2	0.4	0.018
ULEV	1999–2002	0.075	3.4	0.4	0.011

(d) *NMOG measurement and reactivity adjustment*. NMOG emissions shall be measured in accordance with Chapter 5 of the California Regulatory Requirements Applicable to the National Low Emission Vehicle Program (October, 1996). These requirements are incorporated by reference (see § 86.1). NMOG emissions shall be compared to the applicable NMOG emissions certification or in-use standard according to the following calculation procedures:

(1) For TLEVs, LEVs, and ULEVs designed to operate on any fuel other than conventional gasoline, and for flexible-fuel and dual-fuel TLEVs, LEVs, and ULEVs when operated on a fuel other than gasoline as specified in § 86.1771, manufacturers shall multiply NMOG exhaust mass emission levels by the applicable reactivity adjustment factor set forth in § 86.1777, or established by the Administrator pursuant to § 86.1777. The product of the NMOG exhaust emission levels and the reactivity adjustment factor shall be compared to the applicable certification or in-use exhaust NMOG mass emission standards established for the particular vehicle emission category to determine compliance.

(2) In addition to multiplying the exhaust NMOG mass emission levels by the applicable reactivity adjustment factor, TLEV, LEV, or ULEV natural gas vehicles shall multiply the exhaust methane mass emission level by the applicable methane reactivity adjustment factor in § 86.1777 or established by the Administrator pursuant to § 86.1777. The reactivity-adjusted NMOG value shall be added to the reactivity-adjusted methane value and then the sum shall be compared to the applicable certification or in-use exhaust NMOG mass emission standards established for the particular vehicle emission category to determine compliance.

(3) The exhaust NMOG mass emission levels for fuel-flexible and dual-fuel vehicles when operating on gasoline as specified in § 86.1771 shall not be multiplied by a reactivity adjustment factor.

(e) *SFTP Standards*. Exhaust emissions from 2001 and later model year light-duty vehicles shall meet the additional SFTP standards in this paragraph (e) according to the implementation schedules in this paragraph (e). The standards set forth in this paragraph (e) refer to exhaust emissions emitted over the Supplemental Federal Test Procedure (SFTP) as set forth in subpart B of this part and collected and calculated in accordance with those procedures.

(1) *Tier 1 vehicles and* TLEVs. The SFTP exhaust emission levels from new 2001 and subsequent model year light-duty vehicles certified to the exhaust emission standards in § 86.099–8(a)(1)(i) and subsequent model year provisions and light-duty vehicles certified as TLEVs shall not exceed the standards in Table R99–7.1, according to the implementation schedule in this paragraph (e)(1).

TABLE R99–7.1—SFTP EXHAUST EMISSION STANDARDS (G/MI) FOR TIER 1 VEHICLES AND TLEVS

Useful life	Fuel type	NMHC + NO_X composite	CO		
			A/C test	US06 test	Composite option
Intermediate	Gasoline	0.65	3.0	9.0	3.4
	Diesel	1.48	NA	9.0	3.4

TABLE R99–7.1—SFTP EXHAUST EMISSION STANDARDS (G/MI) FOR TIER 1 VEHICLES AND TLEVS—Continued

Useful life	Fuel type	NMHC + NO_X composite	CO		
			A/C test	US06 test	Composite option
Full	Gasoline	0.91	3.7	11.1	4.2
	Diesel	2.07	NA	11.1	4.2

(i) *Phase-in requirements—2001 to 2003 model years.* For the purposes of this paragraph (e)(1)(i) only, each manufacturer's light-duty vehicle and light light-duty truck fleet shall be defined as the total projected number of the following types of vehicles sold in California: light-duty vehicles certified to the exhaust emission standards in § 86.099–8(a)(1)(i) and subsequent model year provisions, and light light-duty trucks certified to the exhaust emission standards in § 86.099–9(a)(1)(i) and subsequent model year provisions, and light-duty vehicles and light light-duty trucks certified as TLEVs. As an option, a manufacturer may elect to have its total light-duty vehicle and light light-duty truck fleet defined, for the purposes of this paragraph (e)(1)(i) only, as the total projected number of the manufacturer's light-duty vehicles and light light-duty trucks, other than zero emission vehicles, certified and sold in California.

(A) Manufacturers of light-duty vehicles and light light-duty trucks, except low volume manufacturers, shall certify a minimum percentage of their light-duty vehicle and light light-duty truck fleet according to the following phase-in schedule:

Model year	Percentage
2001	25
2002	50
2003	85

(B) [Reserved]

(ii) *Phase-in requirements—2004 and later model years.* For the purposes of this paragraph (e)(1)(ii) only, each manufacturer's light-duty vehicle and light light-duty truck fleet shall be defined as the total projected number of the following types of vehicles sold in the United States: light-duty vehicles certified to the exhaust emission standards in § 86.099–8(a)(1)(i) and subsequent model year provisions, and light light-duty trucks certified to the exhaust emission standards in § 86.099–9(a)(1)(i) and subsequent model year provisions, and light-duty vehicles and light light-duty trucks certified as TLEVs. As an option, a manufacturer may elect to have its total light-duty vehicle and light light-duty truck fleet defined, for the purposes of this paragraph (e)(1)(ii) only, as the total projected number of the manufacturer's light-duty vehicles and light light-duty trucks, other than zero emission vehicles, certified and sold in the United States.

(A) In 2004 and subsequent model years, manufacturers of light-duty vehicles and light light-duty trucks, including low volume manufacturers, shall certify 100 percent of their light-duty vehicle and light light-duty truck fleet to the standards in this paragraph (e)(1).

(B) [Reserved]

(iii) *Phase-in requirements—vehicles sold outside California.* Light-duty vehicles and light light-duty trucks sold outside California shall be certified to the applicable emission standards in this paragraph (e) if a vehicle has been certifed to the emission standards in this paragraph (e) for sale in California and is identical in the following respects:

(A) Vehicle manufacturer;

(B) Vehicle make and model;

(C) Cylinder block configuration (L–6, V–8, and so forth);

(D) Displacement;

(E) Combustion cycle;

(F) Transmission class; and

(G) Axle ratio.

(2) *LEVs and ULEVs.* The SFTP standards in this paragraph (e)(2) represent the maximum SFTP exhaust emissions at 4,000 miles ±250 miles or at the mileage determined by the manufacturer for emission data vehicles in

accordance with § 86.1726. The SFTP exhaust emission levels from new 2001 and subsequent model year light-duty vehicle LEVs and ULEVs shall not exceed the standards in the following table, according to the implementation schedule in this paragraph (e)(2)(i).

TABLE R99–7.2—SFTP EXHAUST EMISSION STANDARDS (G/MI) FOR LEVS AND ULEVS

US06 Test		A/C Test	
NMHC + NO_X	CO	NMHC + NO_X	CO
0.14	8.0	0.20	2.7

(i) *Phase-in requirements—2001 to 2003 model years.* For the purposes of this paragraph (e)(2)(i) only, each manufacturer's light-duty vehicle and light light-duty truck fleet shall be defined as the total projected number of light-duty vehicles and light light-duty trucks certified as LEVs and ULEVs sold in California.

(A) Manufacturers of light-duty vehicles and light light-duty trucks, except low volume manufacturers, shall certify to the standards in this paragraph (e)(2) a minimum percentage of their light-duty vehicle and light light-duty truck fleet according to the following phase-in schedule:

Model year	Percentage
2001	25
2002	50
2003	85

(B) Manufacturers may use an ''Alternative or Equivalent Phase-in Schedule'' to comply with the phase-in requirements. An ''Alternative Phase-in'' is one that achieves at least equivalent emission reductions by the end of the last model year of the scheduled phase-in. Model-year emission reductions shall be calculated by multiplying the percent of vehicles (based on the manufacturer's projected California sales volume of the applicable vehicle fleet) meeting the new requirements per model year by the number of model years implemented prior to and including the last model year of the scheduled phase-in. The ''cumulative total'' is the summation of the model-year emission reductions (e.g., a four model-year 25/50/85/100 percent phase-in schedule would be calculated as: (25%*4 years) + (50%*3 years) + (85%*2 years) + (100%*1 year) + 520). Any alternative phase-in that results in an equal or larger cumulative total than the required cumulative total by the end of the last model year of the scheduled phase-in shall be considered acceptable by the Administrator under the following conditions: All vehicles subject to the phase-in shall comply with the respective requirements in the last model year of the required phase-in schedule; and if a manufacturer uses the optional phase-in percentage determination in paragraph (e)(1)(i) of this section, the cumulative total of model-year emission reductions as determined only for light-duty vehicles and light light-duty trucks certified to this paragraph (e)(2) must also be equal to or larger than the required cumulative total by end of the 2004 model year. Manufacturers shall be allowed to include vehicles introduced before the first model year of the scheduled phase-in (e.g., in the previous example, 10 percent introduced one year before the scheduled phase-in begins would be calculated as: (10%*5 years) and added to the cumulative total).

(ii) *Phase-in requirements—2004 and later model years.* For the purposes of this paragraph (e)(2)(ii) only, each manufacturer's light-duty vehicle and light light-duty truck fleet shall be defined as the total projected number of light-duty vehicles and light light-duty trucks certified as LEVs and ULEVs sold in the United States.

(A) In 2004 and subsequent model years, manufacturers of light-duty vehicles and light light-duty trucks, including low volume manufacturers, shall certify 100 percent of their light-duty vehicle and light light-duty truck fleet to the standards in this paragraph (e)(2).

(iii) *Phase-in requirements—vehicles sold outside California.* Light-duty vehicles and light light-duty trucks sold outside California shall be certified to the applicable emission standards in this paragraph (e) if a vehicle has been certifed to the emission standards in this paragraph (e) for sale in California and is identical in the following respects:

(A) Vehicle manufacturer;

(B) Vehicle make and model;

(C) Cylinder block configuration (L–6, V–8, and so forth);

(D) Displacement;

(E) Combustion cycle;

(F) Transmission class; and

(G) Axle ratio.

(3) *A/C-on specific calibrations.* A/C-on specific calibrations (e.g. air to fuel ratio, spark timing, and exhaust gas recirculation), may be used which differ from A/C-off calibrations for given engine operating conditions (e.g., engine speed, manifold pressure, coolant temperature, air charge temperature, and any other parameters). Such calibrations must not unnecessarily reduce the NMHC+NO_X emission control effectiveness during A/C-on operation when the vehicle is operated under conditions which may reasonably be expected to be encountered during normal operation and use. If reductions in control system NMHC+NO_X effectiveness do occur as a result of such calibrations, the manufacturer shall, in the Application for Certification, specify the circumstances under which such reductions do occur, and the reason for the use of such calibrations resulting in such reductions in control system effectiveness. A/C-on specific ''open-loop'' or ''commanded enrichment'' air-fuel enrichment strategies (as defined below), which differ from A/C-off ''open-loop'' or ''commanded enrichment'' air-fuel enrichment strategies, may not be used, with the following exceptions: Cold-start and warm-up conditions, or, subject to Administrator approval, conditions requiring the protection of the vehicle, occupants, engine, or emission control hardware. Other than these exceptions, such strategies which are invoked based on manifold pressure, engine speed, throttle position, or other engine parameters shall use the same engine parameter criteria for the invoking of this air-fuel enrichment strategy and the same degree of enrichment regardless of whether the A/C is on or off. ''Open-loop'' or ''commanded'' air-fuel enrichment strategy is defined as enrichment of the air to fuel ratio beyond stoichiometry for the purposes of increasing engine power output and the protection of engine or emissions control hardware. However, ''closed-loop biasing,'' defined as small changes in the air-fuel ratio for the purposes of optimizing vehicle emissions or driveability, shall not be considered an ''open-loop'' or ''commanded'' air-fuel enrichment strategy. In addition, ''transient'' air-fuel enrichment strategy (or ''tip-in'' and ''tip-out'' enrichment), defined as the temporary use of an air-fuel ratio rich of stoichiometry at the beginning or duration of rapid throttle motion, shall not be considered an ''open-loop'' or ''commanded'' air-fuel enrichment strategy.

(4) ''*Lean-on-cruise*'' *calibration strategies.* (i) In the Application for Certification, the manufacturer shall state whether any ''lean-on-cruise'' strategies are incorporated into the vehicle design. A ''lean-on-cruise'' air-fuel calibration strategy is defined as the use of an air-fuel ratio significantly greater than stoichiometry, during non-deceleration conditions at speeds above 40 mph. ''Lean-on-cruise'' air-fuel calibration strategies shall not be employed during vehicle operation in normal driving conditions, including A/C usage, unless at least one of the following conditions is met:

(A) Such strategies are substantially employed during the FTP or SFTP;

(B) Such strategies are demonstrated not to significantly reduce vehicle NMHC+NO_X emission control effectiveness over the operating conditions in which they are employed;

(C) Such strategies are demonstrated to be necessary to protect the vehicle occupants, engine, or emission control hardware.

(ii) If the manufacturer proposes to use a ''lean-on-cruise'' calibration strategy, the manufacturer shall specify the circumstances under which such a calibration would be used, and the reason or reasons for the proposed use of such a calibration.

(iii) The provisions of this paragraph (e)(4) shall not apply to vehicles powered by ''lean-burn'' engines or diesel-cycle engines. A ''lean-burn'' engine is defined as an Otto-cycle engine designed to run at an air-fuel ratio significantly greater than stoichiometry during the large majority of its operation.

(5) *Applicability to alternative fuel vehicles.* These SFTP standards do not apply to vehicles certified on fuels

other than gasoline and diesel fuel, but the standards do apply to the gasoline and diesel fuel operation of flexible-fuel vehicles and dual-fuel vehicles.

(6) *Single-roll electric dynamometer requirement*. For all vehicles certified to the SFTP standards, a single-roll electric dynamometer or a dynamometer which produces equivalent results, as set forth in § 86.108, must be used for all types of emission testing to determine compliance with the associated emission standards.

[62 FR 31242, June 6, 1997. Redesignated and amended at 63 FR 976, Jan. 7, 1998; 70 FR 40442, July 13, 2005]

§ 86.1709–99 Exhaust emission standards for 1999 and later light light-duty trucks.

(a) Light light-duty trucks certified under the provisions of this subpart shall comply with the applicable exhaust emission standards in this section. In addition to the exhaust emission standards in this section, light light-duty trucks certified under the provisions of this subpart shall comply with all applicable emission standards and requirements in § 86.097–9 and subsequent model year provisions.

(1) Light light-duty trucks that meet the exhaust emission standards in this section are deemed to be in compliance with all the exhaust emission standards in § 86.097–9(a)(1)(i) and subsequent model year provisions, except for the emission standards and test procedures for total hydrocarbon (THC), particulate matter (PM), and high altitude conditions. Diesel light light-duty trucks that meet the PM standard in this section are deemed to be in compliance with the PM standards in § 86.097–9 and subsequent model year provisions.

(2) [Reserved]

(b)(1) *Standards*. (i) Exhaust emissions from 1999 and later model year light light-duty trucks classified as TLEVs, LEVs, and ULEVs shall not exceed the standards in Tables R99–8 and R99–9 in rows designated with the applicable vehicle emission category and loaded vehicle weight. These standards shall apply equally to certification and in-use vehicles, except as provided in paragraph (c) of this section. The tables follow:

TABLE R99–8—INTERMEDIATE USEFUL LIFE (50,000 MILE) STANDARDS (G/MI) FOR LIGHT LIGHT-DUTY TRUCKS CLASSIFIED AS TLEVS, LEVS, AND ULEVS

Loaded vehicle weight	Vehicle emission category	NMOG	CO	NO_X	HCHO
3751	TLEV	0.125	3.4	0.4	0.015
	LEV	0.075	3.4	0.2	0.015
	ULEV	0.040	1.7	0.2	0.008
3751–5750	TLEV	0.160	4.4	0.7	0.018
	LEV	0.100	4.4	0.4	0.018
	ULEV	0.050	2.2	0.4	0.009

TABLE R99–9—FULL USEFUL LIFE (100,000 MILE) STANDARDS (G/MI) FOR LIGHT LIGHT-DUTY TRUCKS CLASSIFIED AS TLEVS, LEVS, AND ULEVS

Loaded vehicle weight	Vehicle emission category	NMOG	CO	NO_X	HCHO	PM (diesels only)
0–3750	TLEV	0.156	4.2	0.6	0.018	0.08
	LEV	0.090	4.2	0.3	0.018	0.08
	ULEV	0.055	2.1	0.3	0.011	0.04
3751–5750	TLEV	0.200	5.5	0.9	0.023	0.10
	LEV	0.130	5.5	0.5	0.023	0.10
	ULEV	0.070	2.8	0.5	0.013	0.05

(ii) *Diesel vehicles*. The particulate matter (PM) standards in paragraph (b)(1)(i) of this section are applicable to diesel vehicles only. For diesel vehicles certifying to the standards set forth in paragraph (b)(1)(i) of this section, ''NMOG'' shall mean non-methane hydrocarbons.

(iii) *NMOG standards for flexible-fuel and dual-fuel light duty trucks.* Flexible-fuel and dual-fuel light light-duty trucks shall be certified to exhaust emission standards for NMOG established both for the operation of the vehicle on an available fuel other than gasoline and for the operation of the vehicle on gasoline as specified in § 86.1771.

(A) The applicable NMOG emission standards for flexible-fuel and dual-fuel light light-duty trucks when certifying the vehicle for operation on fuels other than gasoline shall be the NMOG standards in paragraph (b)(1)(i) of this section.

(B) The applicable NMOG emission standards for flexible-fuel and dual-fuel light light-duty trucks when certifying the vehicle for operation on gasoline shall be the NMOG standards in Tables R99–10 and R99–11 in the rows designated with the applicable vehicle emission category and loaded vehicle weight, as follows:

TABLE R99–10—INTERMEDIATE USEFUL LIFE (50,000 MILE) NMOG STANDARDS (G/MI) FOR FLEXIBLE-FUEL AND DUAL-FUEL LIGHT LIGHT-DUTY TRUCKS CLASSIFIED AS TLEVS, LEVS, AND ULEVS

Loaded vehicle weight	Vehicle emission category	NMOG
0–3750	TLEV	0.25
	LEV	0.125
	ULEV	0.075
3751–5750	TLEV	0.32
	LEV	0.160
	ULEV	0.100

TABLE R99–11—FULL USEFUL LIFE (100,000 MILE) NMOG STANDARDS (G/MI) FOR FLEXIBLE-FUEL AND DUAL-FUEL LIGHT LIGHT-DUTY TRUCKS CLASSIFIED AS TLEVS, LEVS, AND ULEVS

Loaded vehicle weight	Vehicle emission category	NMOG
0–3750	TLEV	0.31
	LEV	0.156
	ULEV	0.090
3751–5750	TLEV	0.40
	LEV	0.200
	ULEV	0.130

(iv) *Highway NO_X.* The maximum projected NO_X emissions measured on the federal Highway Fuel Economy Test in 40 CFR part 600, subpart B, shall be not greater than 1.33 times the applicable light light-duty truck standards shown in tables R99–8 and R99–9. Both the projected emissions and the Highway Fuel Economy Test standard shall be rounded to the nearest 0.1 g/mi in accordance with the Rounding-Off Method specified in ASTM E29–90, Standard Practice for Using Significant Digits in Test Data to Determine Conformance with Specifications, before being compared. These procedures are incorporated by reference (see § 86.1).

(v) *Hybrid electric vehicle requirements.* Deterioration factors for hybrid electric vehicles shall be based on the emissions and mileage accumulation of the auxiliary power unit. For certification purposes only, Type A hybrid electric vehicles shall demonstrate compliance with 50,000 mile emission standards (using 50,000 mile deterioration factors), and shall not be required to demonstrate compliance with 100,000 mile emission standards. For certification purposes only, Type B hybrid electric vehicles shall demonstrate compliance with 50,000 mile emission standards (using 50,000 mile deterioration factors) and 100,000 mile emission standards (using 75,000 mile deterioration factors). For certification purposes only, Type C hybrid electric vehicles shall demonstrate compliance with 50,000 mile emission standards (using 50,000 mile deterioration factors) and 100,000 mile emission standards (using 100,000 mile deterioration factors).

(vi) *50 degree F requirements.* Light light-duty trucks shall comply with the emission standards for NMOG, CO, NO_X, and HCHO in paragraph (b)(1)(i) of this section at 50 degrees F, according to the procedure specified in § 86.1773. Hybrid electric vehicles, natural gas vehicles, and diesel fueled vehicles are not required to comply with the provisions of this paragraph (b)(1)(vi).

(2) [Reserved]

(c) *In-use emission standards.*

(1) 1999 model year light light-duty trucks certified as LEVs and 1999 through 2002 model year light light-duty trucks certified as ULEVs shall meet the applicable intermediate and full useful life in-use standards in paragraph (c)(2) of this section, according to the following provisions:

(i) [Reserved]

(ii) The applicable in-use emission standards for vehicle emission categories and model years not shown in Tables R99–12 and R99–13 shall be the intermediate and full useful life standards in paragraph (b) of this section.

(2) Light light-duty trucks, including flexible-fuel and dual-fuel light light-duty trucks when operated on gasoline and on an available fuel other than gasoline, shall meet all intermediate and full useful life in-use standards for the applicable vehicle emission category, loaded vehicle weight, and model year in Tables R99–12 and R99–13, as follows:

TABLE R99–12—INTERMEDIATE USEFUL LIFE (50,000 MILE) IN-USE STANDARDS (G/MI) FOR LIGHT LIGHT-DUTY TRUCKS

Loaded vehicle weight	Vehicle emission category	Model year	NMOG	CO	NO_X	HCH0
0–3750	LEV	1999	0.100	3.4	0.3	0.015
	ULEV	1999–2002	0.055	2.1	0.3	0.008
3751–5750	LEV	1999	0.130	4.4	0.5	0.018
	ULEV	1999–2002	0.070	2.8	0.5	0.009

TABLE R99–13—FULL USEFUL LIFE (100,000 MILE) IN-USE STANDARDS (G/MI) FOR LIGHT LIGHT-DUTY TRUCKS

Loaded vehicle weight	Vehicle emission category	Model year	NMOG	CO	NO_X	HCHO
0–3750	LEV	1999	0.125	4.2	0.4	0.018
	ULEV	1999–2002	0.075	3.4	0.4	0.011
3751–5750	LEV	1999	0.160	5.5	0.7	0.023
	ULEV	1999–2002	0.100	4.4	0.7	0.013

(d) *NMOG measurement and reactivity adjustment*. NMOG emissions shall be measured in accordance with Chapter 5 of the California Regulatory Requirements Applicable to the National Low Emission Vehicle Program (October, 1996). These procedures are incorporated by reference (see § 86.1). NMOG emissions shall be compared to the applicable NMOG emissions certification or in-use standard according to the following calculation procedures:

(1) For TLEVs, LEVs, and ULEVs designed to operate on any fuel other than conventional gasoline, and for flexible-fuel and dual-fuel TLEVs, LEVs, and ULEVs when operated on a fuel other than gasoline as specified in § 86.1771, manufacturers shall multiply NMOG mass exhaust emission levels by the applicable reactivity adjustment factor set forth in § 86.1777 or established by the Administrator pursuant to § 86.1777. The product of the NMOG exhaust emission levels and the reactivity adjustment factor shall be compared to the applicable certification or in-use exhaust NMOG mass emission standards established for the particular vehicle emission category to determine compliance.

(2) In addition to multiplying the exhaust NMOG mass emission levels by the applicable reactivity adjustment factor, TLEV, LEV, or ULEV natural gas vehicles shall multiply the exhaust methane mass emission level by the applicable methane reactivity adjustment factor in § 86.1777 or established by the Administrator pursuant to § 86.1777. The reactivity-adjusted NMOG value shall be added to the reactivity-adjusted methane value and then the sum shall be compared to the applicable certification or in-use exhaust NMOG mass emission standards established for the particular vehicle emission category to determine compliance.

(3) The exhaust NMOG mass emission levels for fuel-flexible and dual-fuel vehicles when operating on gasoline as specified in § 86.1771 shall not be multiplied by a reactivity adjustment factor.

(e) *SFTP Standards*. Exhaust emissions from 2001 and later model year light light-duty trucks shall meet the additional SFTP standards in this paragraph (e) according to the implementation schedules in this paragraph (e). The standards set forth in this paragraph (e) refer to exhaust emissions emitted over the Supplemental

Federal Test Procedure (SFTP) as set forth in subpart B of this part and collected and calculated in accordance with those procedures.

(1) *Tier 1 vehicles and* TLEVs. The SFTP exhaust emission levels from new 2001 and subsequent model year light light-duty trucks certified to the exhaust emission standards in § 86.099–9(a)(1)(i) and subsequent model year provisions and light light-duty trucks certified as TLEVs shall not exceed the standards in Table R99–14.1, according to the implementation schedule in this paragraph (e)(1).

TABLE R99–14.1—SFTP EXHAUST EMISSION STANDARDS (G/MI) FOR TIER 1 VEHICLES AND TLEVS

Useful life	Fuel type	LVW (lbs)	NMHC + NO_X composite	CO		
				A/C test	US06 test	Composite option
Intermediate	Gasoline	0–3750	0.65	3.0	9.0	3.4
		3751–5750	1.02	3.9	11.6	4.4
	Diesel	0–3750	1.48	NA	9.0	3.4
		3751–5750	NA	NA	NA	NA
Full	Gasoline	0–3750	0.91	3.7	11.1	4.2
		3751–5750	1.37	4.9	14.6	5.5
	Diesel	0–3750	2.07	NA	11.1	4.2
		3751–5750	NA	NA	NA	NA

(i) *Phase-in requirements—2001 to 2003 model years.* For the purposes of paragraph (e)(1)(i) of this section only, each manufacturer's light-duty vehicle and light light-duty truck fleet shall be defined as the total projected number of the following types of vehicles sold in Calfornia: light-duty vehicles certified to the exhaust emission standards in § 86.099–8(a)(1)(i) and subsequent model year provisions, and light light-duty trucks certified to the exhaust emission standards in § 86.099–9(a)(1)(i) and subsequent model year provisions, and light-duty vehicles and light light-duty trucks certified as TLEVs. As an option, a manufacturer may elect to have its total light-duty vehicle and light light-duty truck fleet defined, for the purposes of this paragraph (e)(1)(i) only, as the total projected number of the manufacturer's light-duty vehicles and light light-duty trucks, other than zero emission vehicles, certified and sold in California.

(A) Manufacturers of light-duty vehicles and light light-duty trucks, except low volume manufacturers, shall certify a minimum percentage of their light-duty vehicle and light light-duty truck fleet according to the following phase-in schedule:

Model year	Percentage
2001	25
2002	50
2003	85

(B) [Reserved]

(ii) *Phase-in requirements—2004 and later model years.* For the purposes of paragraph (e)(1)(ii) of this section only, each manufacturer's light-duty vehicle and light light-duty truck fleet shall be defined as the total projected number of the following types of vehicles sold in the United States: light-duty vehicles certified to the exhaust emission standards in § 86.099–8(a)(1)(i) and subsequent model year provisions, light light-duty trucks certified to the exhaust emission standards in § 86.099–9(a)(1)(i) and subsequent model year provisions, and light-duty vehicles and light light-duty trucks certified as TLEVs. As an option, a manufacturer may elect to have its total light-duty vehicle and light light-duty truck fleet defined, for the purposes of this paragraph (e)(1)(ii) only, as the total projected number of the manufacturer's light-duty vehicles and light light-duty trucks, other than zero emission vehicles, certified and sold in the United States.

(A) In 2004 and subsequent model years, manufacturers of light-duty vehicles and light light-duty trucks, including low volume manufacturers, shall certify 100 percent of their light-duty vehicle and light light-duty truck

fleet to the standards in this paragraph (e)(1).

(B) [Reserved]

(iii) *Phase-in requirements—vehicles sold outside California.* Light-duty vehicles and light light-duty trucks sold outside California shall be certified to the applicable emission standards in this paragraph (e) if a vehicle has been certifed to the emission standards in this paragraph (e) for sale in California and is identical in the following respects:

(A) Vehicle manufacturer;

(B) Vehicle make and model;

(C) Cylinder block configuration (L–6, V–8, and so forth);

(D) Displacement;

(E) Combustion cycle;

(F) Transmission class; and

(G) Axle ratio.

(2) *LEVs and ULEVs.* The SFTP standards in this paragraph (e)(2) represent the maximum SFTP exhaust emissions at 4,000 miles =/−250 miles or at the mileage determined by the manufacturer for emission data vehicles in accordance with § 86.1726. The SFTP exhaust emission levels from new 2001 and subsequent model year light light-duty truck LEVs and ULEVs shall not exceed the standards in the following table, according to the implementation schedule in this paragraph (e)(2).

TABLE R99–14.2—SFTP EXHAUST EMISSION STANDARDS (G/MI) FOR LEVS AND ULEVS

Loaded vehicle weight (lbs)	US06 Test		A/C Test	
	MNHC + NO_X	CO	NMHC + NO_X	CO
0–3750	0.14	8.0	0.20	2.7
3751–5750	0.25	10.5	0.27	3.5

(i) *Phase-in requirements—2001 to 2003 model years.* For the purposes of this paragraph (e)(2)(i) only, each manufacturer's light-duty vehicle and light light-duty truck fleet shall be defined as the total projected number of light-duty vehicles and light light-duty trucks certified as LEVs and ULEVs sold in California.

(A) Manufacturers of light-duty vehicles and light light-duty trucks, except low volume manufacturers, shall certify to the standards in this paragraph (e)(2) a minimum percentage of their light-duty vehicle and light light-duty truck fleet according to the following phase-in schedule:

Model year	Percentage
2001	25
2002	50
2003	85

(B) Manufacturers may use an ''Alternative or Equivalent Phase-in Schedule'' to comply with the phase-in requirements. An ''Alternative Phase-in'' is one that achieves at least equivalent emission reductions by the end of the last model year of the scheduled phase-in. Model-year emission reductions shall be calculated by multiplying the percent of vehicles (based on the manufacturer's projected California sales volume of the applicable vehicle fleet) meeting the new requirements per model year by the number of model years implemented prior to and including the last model year of the scheduled phase-in. The ''cumulative total'' is the summation of the model-year emission reductions (e.g., a four model-year 25/50/85/100 percent phase-in schedule would be calculated as: (25%*4 years)+(50%*3 years)+(85%*2 years)+(100%*1 year) + 520). Any alternative phase-in that results in an equal or larger cumulative total than the required cumulative total by the end of the last model year of the scheduled phase-in shall be considered acceptable by the Administrator under the following conditions: All vehicles subject to the phase-in shall comply with the respective requirements in the last model year of the required phase-in schedule; and if a manufacturer uses the optional phase-in percentage determination in paragraph (e)(1)(i) of this section, the cumulative total of model-year emission reductions as determined only for light-duty vehicles and light light-duty trucks certified to this paragraph (e)(2) must also be equal to or larger than the required cumulative

total by the end of the 2004 model year. Manufacturers shall be allowed to include vehicles introduced before the first model year of the scheduled phase-in (e.g., in the previous example, 10 percent introduced one year before the scheduled phase-in begins would be calculated as: (10%*5 years) and added to the cumulative total).

(ii) *Phase-in requirements—2004 and later model years.* For the purposes of this paragraph (e)(2)(ii) only, each manufacturer's light-duty vehicle and light light-duty truck fleet shall be defined as the total projected number of light-duty vehicles and light light-duty trucks certified as LEVs and ULEVs sold in the United States.

(A) In 2004 and subsequent model years, manufacturers of light-duty vehicles and light light-duty trucks, including low volume manufacturers, shall certify 100 percent of their light-duty vehicle and light light-duty truck fleet to the standards in this paragraph (e)(2).

(B) [Reserved]

(iii) *Phase-in requirements—vehicles sold outside California.* Light-duty vehicles and light light-duty trucks sold outside California shall be certified to the applicable emission standards in this paragraph (e) if a vehicle has been certifed to the emission standards in this paragraph (e) for sale in California and is identical in the following respects:

(A) Vehicle manufacturer;

(B) Vehicle make and model;

(C) Cylinder block configuration (L–6, V–8, and so forth);

(D) Displacement;

(E) Combustion cycle;

(F) Transmission class; and

(G) Axle ratio.

(3) *A/C-on specific calibrations.* A/C-on specific calibrations (e.g., air to fuel ratio, spark timing, and exhaust gas recirculation), may be used which differ from A/C-off calibrations for given engine operating conditions (e.g., engine speed, manifold pressure, coolant temperature, air charge temperature, and any other parameters). Such calibrations must not unnecessarily reduce the NMHC+NO_X emission control effectiveness during A/C-on operation when the vehicle is operated under conditions which may reasonably be expected to be encountered during normal operation and use. If reductions in control system NMHC+NO_X effectiveness do occur as a result of such calibrations, the manufacturer shall, in the Application for Certification, specify the circumstances under which such reductions do occur, and the reason for the use of such calibrations resulting in such reductions in control system effectiveness. A/C-on specific ''open-loop'' or ''commanded enrichment'' air-fuel enrichment strategies (as defined below), which differ from A/C-off ''open-loop'' or ''commanded enrichment'' air-fuel enrichment strategies, may not be used, with the following exceptions: Cold-start and warm-up conditions, or, subject to Administrator approval, conditions requiring the protection of the vehicle, occupants, engine, or emission control hardware. Other than these exceptions, such strategies which are invoked based on manifold pressure, engine speed, throttle position, or other engine parameters shall use the same engine parameter criteria for the invoking of this air-fuel enrichment strategy and the same degree of enrichment regardless of whether the A/C is on or off. ''Open-loop'' or ''commanded'' air-fuel enrichment strategy is defined as enrichment of the air to fuel ratio beyond stoichiometry for the purposes of increasing engine power output and the protection of engine or emissions control hardware. However, ''closed-loop biasing,'' defined as small changes in the air-fuel ratio for the purposes of optimizing vehicle emissions or driveability, shall not be considered an ''open-loop'' or ''commanded'' air-fuel enrichment strategy. In addition, ''transient'' air-fuel enrichment strategy (or ''tip-in'' and ''tip-out'' enrichment), defined as the temporary use of an air-fuel ratio rich of stoichiometry at the beginning or duration of rapid throttle motion, shall not be considered an ''open-loop'' or ''commanded'' air-fuel enrichment strategy.

(4) *''Lean-on-cruise'' calibration strategies.* (i) In the Application for Certification, the manufacturer shall state whether any ''lean-on-cruise'' strategies are incorporated into the vehicle design. A ''lean-on-cruise'' air-fuel calibration strategy is defined as the use of

an air-fuel ratio significantly greater than stoichiometry, during non-deceleration conditions at speeds above 40 mph. ''Lean-on-cruise'' air-fuel calibration strategies shall not be employed during vehicle operation in normal driving conditions, including A/C usage, unless at least one of the following conditions is met:

(A) Such strategies are substantially employed during the FTP or SFTP;

(B) Such strategies are demonstrated not to significantly reduce vehicle NMHC+NO_X emission control effectiveness over the operating conditions in which they are employed;

(C) Such strategies are demonstrated to be necessary to protect the vehicle occupants, engine, or emission control hardware.

(ii) If the manufacturer proposes to use a ''lean-on-cruise'' calibration strategy, the manufacturer shall specify the circumstances under which such a calibration would be used, and the reason or reasons for the proposed use of such a calibration.

(iii) The provisions of this paragraph (e)(4) shall not apply to vehicles powered by ''lean-burn'' engines or diesel-cycle engines. A ''lean-burn'' engine is defined as an Otto-cycle engine designed to run at an air-fuel ratio significantly greater than stoichiometry during the large majority of its operation.

(5) *Applicability to alternative fuel vehicles.* These SFTP standards do not apply to vehicles certified on fuels other than gasoline and diesel fuel, but the standards do apply to the gasoline and diesel fuel operation of flexible-fuel vehicles and dual-fuel vehicles.

(6) *Single-roll electric dynamometer requirement.* For all vehicles certified to the SFTP standards, a single-roll electric dynamometer or a dynamometer which produces equivalent results, as set forth in § 86.108, must be used for all types of emission testing to determine compliance with the associated emission standards.

[62 FR 31242, June 6, 1997. Redesignated and amended at 63 FR 979, Jan. 7, 1998; 70 FR 40442, July 13, 2005]

§ 86.1710–99 Fleet average non-methane organic gas exhaust emission standards for light-duty vehicles and light light-duty trucks.

(a) *Fleet average NMOG standards and compliance.* (1) Each manufacturer shall certify light-duty vehicles or light light-duty trucks to meet the exhaust emission standards in this subpart for TLEVs, LEVs, ULEVs, or ZEVs, or the exhaust emission standards of § 86.096–8(a)(1)(i) and subsequent model year provisions or § 86.097–9(a)(1)(i) and subsequent model year provisions, such that, using the applicable intermediate useful life standards, the manufacturer's fleet average NMOG values for light-duty vehicles and light light-duty trucks sold in the applicable region according to the specifications of Tables R99–15 and R99–16 are less than or equal to the standards in Tables R99–15 and R99–16 in the rows designated with the applicable vehicle type, loaded vehicle weight, and model year, as follows:

TABLE R99–15—FLEET AVERAGE NON-METHANE ORGANIC GAS STANDARDS (G/MI) FOR LIGHT-DUTY VEHICLES AND LIGHT LIGHT-DUTY TRUCKS SOLD IN THE NORTHEAST TRADING REGION

Vehicle type	Loaded vehicle weight	Model year	Fleet average NMOG
Light light-duty vehicles	All	1999	0.148
		2000	0.095
and			
Light light-duty trucks	0–3750.		
Light light-duty trucks	3751–5750	1999	0.190
		2000	0.124

TABLE R99–16—FLEET AVERAGE NON-METHANE ORGANIC GAS STANDARDS (G/MI) FOR LIGHT-DUTY VEHICLES AND LIGHT LIGHT-DUTY TRUCKS SOLD IN THE ALL STATES TRADING REGION

Vehicle type	Loaded vehicle weight	Model year	Fleet average NMOG
Light-duty vehicles	All	2001 and later	0.075

TABLE R99–16—FLEET AVERAGE NON-METHANE ORGANIC GAS STANDARDS (G/MI) FOR LIGHT-DUTY VEHICLES AND LIGHT LIGHT-DUTY TRUCKS SOLD IN THE ALL STATES TRADING REGION—Continued

Vehicle type	Loaded vehicle weight	Model year	Fleet average NMOG
and			
Light light-duty trucks	0–3750.		
Light light-duty trucks	3751–5750	2001 and later	0.100

(2)(i) For the purpose of calculating the HEV contribution factor for the fleet average NMOG value, a manufacturer may use adjusted values to estimate the contributions of hybrid electric vehicles (or ''HEVs'') based on the range of the HEV without the use of the engine. See § 86.1702 for definitions of HEV types for purposes of calculating adjusted NMOG emissions.

(ii) For the purpose of calculating fleet average NMOG values, vehicles that have no tailpipe emissions but use fuel-fired heaters and that are not certified as ZEVs shall be treated as Type A HEV ULEVs.

(3)(i) Each manufacturer's applicable fleet average NMOG value for all light light-duty trucks from 0–3750 lbs. loaded vehicle weight and light-duty vehicles sold in the applicable region according to Tables R99–15 and R99–16 shall be calculated in units of g/mi NMOG according to the following equation, where the term ''Sold'' means sold in the applicable region according to Tables R99–15 and R99–16, and the term ''Vehicles'' means light light-duty trucks from 0–3750 lbs loaded vehicle weight and light-duty vehicles: (((No. of Vehicles Certified to the Federal Tier 1 Exhaust Emission Standards and Sold)×(0.25))+((No. of TLEVs Sold excluding HEVs)× (0.125))+((No. of LEVs Sold excluding HEVs)×(0.75))+((No. of ULEVs Sold excluding HEVs)×(0.040))+(HEV contribution factor))/(Total No. of Vehicles Sold, including ZEVs and HEVs).

(A) For model years 1997 through 2000, ''Vehicles'' in the preceding equation shall include California-certified vehicles, including vehicles certified to California Tier 1 standards.

(B) For model years 2001 and later, ''vehicles'' in the preceding equation shall not include California-certified vehicles unless they are also certified under the National LEV program.

(ii)(A) ''HEV contribution factor'' shall mean the NMOG emission contribution of HEVs to the fleet average NMOG value. The HEV contribution factor shall be calculated in units of g/mi as follows, where the term ''Sold'' means sold in the applicable region according to tables R99–15 and R99–16.

(B) HEV contribution factor = (((No. of Type A HEV TLEVs Sold) × (0.100)) + ((No. of Type B HEV TLEVs Sold) × (0.113)) + ((No. of Type C HEV TLEVs Sold) × (0.125))) + (((No. of Type A HEV LEVs Sold) × (0.057)) + ((No. of Type B HEV LEVs Sold) × (0.066)) + ((No. of Type C HEV LEVs Sold) × (0.075))) + (((No. of Type A HEV ULEVs Sold) × (0.020)) + ((No. of Type B HEV ULEVs Sold) × (0.030)) + ((No. of Type C HEV ULEVs Sold) × (0.040))).

(iii)(A) For any model year in which a manufacturer certifies its entire fleet of light-duty vehicles and light light-duty trucks from 0–3750 lbs LVW to intermediate useful life NMOG emission standards specified in §§ 86.1708 and 86.1709 that are less than or equal to the applicable fleet average NMOG standard specified in Tables R99–15 and R99–16, the manufacturer may elect not to calculate a fleet average NMOG value for such vehicles for that model year.

(B) The fleet average NMOG value for a manufacturer electing under paragraph (a)(3)(iii)(A) of this section not to calculate a fleet average NMOG value shall be deemed to be the applicable fleet average NMOG standard specified in Table R99–15 or R99–16 for the applicable model year.

(C) A manufacturer making the election under paragraph (a)(3)(iii)(A) of this section may not generate credits for that model year for light light-duty trucks from 0–3750 lbs LVW and light-duty vehicles.

(4)(i) Each manufacturer's applicable fleet average NMOG value for all light

light-duty trucks from 3751–5750 lbs loaded vehicle weight sold in the applicable region according to Tables R99–15 and R99–16 shall be calculated in units of g/mi NMOG according to the following equation, where the term ''Sold'' means sold in the applicable region according to Tables R97–15 and R97–16, and the term ''Vehicles'' means light light-duty trucks from 3751–5750 lbs loaded vehicle weight: (((No. of Vehicles Certified to the Federal Tier 1 Exhaust Emission Standards and Sold)×(0.32))+((No. of TLEVs Sold excluding HEVs) × (0.160)) + ((No. of LEVs Sold excluding HEVs)×(0.100)) + (No. of ULEVs Sold excluding HEVs)×(0.050))+(HEV Contribution factor)) / (Total No. of Vehicles Sold, including ZEVs and HEVs).

(A) For model years 1997 through 2000, ''Vehicles'' in the preceding equation shall include California-certified vehicles, including vehicles certified to California Tier 1 standards.

(B) For model years 2001 and later, ''Vehicles'' in the preceding equation shall not include California-certified vehicles unless they are also certified under the National LEV program.

(ii)(A) ''HEV contribution factor'' shall mean the NMOG emission contribution of HEVs to the fleet average NMOG. The HEV contribution factor shall be calculated in units of g/mi as follows, where the term ''Sold'' means sold in the applicable region according to tables R99–15 and R99–16.

(B) HEV contribution factor=(((No. of Type A HEV TLEVs Sold) × (0.130)) + ((No. of Type B HEV TLEVs Sold) × (0.145)) + ((No. of Type C HEV TLEVs Sold) × (0.160))) + (((No. of Type A HEV LEVs Sold) × (0.075)) + ((No. of Type B HEV LEVs Sold) × (0.087)) + ((No. of Type C HEV LEVs Sold) × (0.100))) + (((No. of Type A HEV ULEVs Sold) × (0.025)) + ((No. of Type B HEV ULEVs Sold) × (0.037)) + ((No. of Type C HEV ULEVs Sold) × (0.050))).

(iii)(A) For any model year in which a manufacturer certifies its entire fleet of light light-duty trucks from 3751–5750 lbs LVW to intermediate useful life NMOG emission standards specified in § 86.1709 that are less than or equal to the applicable fleet average NMOG requirements specified in Tables R99–15 and R99–16, the manufacturer may elect not to calculate a fleet average NMOG value for such vehicles for that model year.

(B) The fleet average NMOG value for a manufacturer electing under paragraph (a)(4)(iii)(A) of this section not to calculate a fleet average NMOG value shall be deemed to be the applicable fleet average NMOG standard specified in Table R99–15 or R99–16 for the applicable model year.

(5)(i) The calculation of the fleet average NMOG value pursuant to paragraphs (a)(3) and (a)(4) of this section shall exclude ATVs, as defined in § 86.1702, purchased in the NTR by state governments. In determining the quantity of vehicles to be excluded from the NMOG calculations, a manufacturer shall only be required to exclude vehicles that are reported by the purchasing government in a timely letter, containing adequate information, directed to the representative of the manufacturer listed in the manufacturer's application for certification. Such letter shall be considered timely only if it is received no later than February 1 of the calendar year following the model year of the purchased vehicles.

(ii) Adequate information includes the number of vehicles purchased, vehicle makes and models, and the associated engine families. A copy of the letter should be sent to: Director, Vehicle Programs and Compliance Division, U.S. Environmental Protection Agency, 2565 Plymouth Road, Ann Arbor, Michigan, 48105.

(6) For any model year prior to model year 2001 for which a manufacturer meets the definition of ''low volume manufacturer'' in § 86.1702, it shall be exempt from the requirements in paragraph (a)(1) of this section. The requirements in paragraph (a)(1) of this section applicable to the 2001 and later model years shall apply to low volume manufacturers.

(b) *Fleet average NMOG credit and debit calculations.* (1) For each averaging set, as defined in § 86.1702, manufacturers that achieve fleet average NMOG values lower than the fleet average NMOG standard for the corresponding model year may generate credits.

(2) For each averaging set, manufacturers that obtain applicable fleet average NMOG values exceeding the fleet average NMOG standard for the corresponding model year shall generate debits.

(3) For each averaging set, credits and debits are to be calculated according to the following equation and rounded, in accordance with the Rounding-Off Method specified in ASTM E29–90, Standard Practice for Using Significant Digits in Test Data to Determine Conformance with Specifications, which is incorporated by reference (see § 86.1), to the nearest whole number (intermediate calculations will not be rounded): Number of Credits/Debits = (((Applicable Fleet Average NMOG Standard) − (Manufacturer's Applicable Fleet Average NMOG Value)) × (Applicable Production)).

(4) For each applicable region and model year, a manufacturer's available credits or level of debits shall be the sum of credits or debits derived from the respective class A and class B averaging sets for that region and model year. Paragraph (d)(2)(ii)(C) of this section contains a special provision for manufacturers that end model year 2000 with a debit balance in the NTR.

(c) *Intermediate in-use emission standards.* (1) Only credits generated in the NTR may be used to offset NMOG debits incurred in the NTR. Manufacturers may use in the ASTR credits generated in the NTR.

(2) Only after credits are earned may they be used, traded, or carried over to another model year. Before trading or carrying over credits to the next model year, a manufacturer must apply available credits to offset any of its debits from the same region, where the deadline to offset such debits has not yet passed.

(3) Credits earned in any given model year shall retain full value through the subsequent model year.

(4) Unused credits that are available at the end of the second, third, and fourth model years after the model year in which the credits were generated shall be discounted to 50%, 25%, and 0% of the original value of the credits, respectively. The discounting of credits also applies to credits transferred to other parties.

(5) Credits may not be used to remedy any nonconformities determined by a Selective Enforcement Audit, recall testing, or testing performed with respect to Title 13, Chapter 2, Articles 1 and 2 of the California Code of Regulations.

(6) Prior to model year 2001, low volume manufacturers may earn credits in the NTR to transfer to other motor vehicle manufacturers for use in the NTR or the ASTR, or to bank for their own use in the ASTR. Such credits will be calculated as set forth in paragraphs (a) and (b) of this section, except that the applicable fleet average NMOG standard shall be 0.25 g/mi NMOG for the averaging set for light light-duty trucks from 0–3750 lbs LVW and light-duty vehicles or 0.32 g/mi NMOG for the averaging set for light light-duty trucks from 3751–5750 lbs LVW. Credits shall be discounted in accordance with the provisions in paragraph (c)(4) of this section.

(7) Prior to model year 2001, manufacturers may earn credits in the ASTR states that are not in the NTR and may bank those credits for use in the ASTR. Such credits will be calculated as set forth in paragraphs (a) and (b) of this section, except that the applicable fleet average NMOG standard shall be 0.25 g/mi NMOG for the averaging set for light light-duty trucks from 0–3750 lbs LVW and light-duty vehicles or 0.32 g/mi NMOG for the averaging set for light light-duty trucks from 3751–5750 lbs LVW, and ''sold'' shall mean sold in the ASTR states that are not in the NTR.

(i) Emission credits earned in the ASTR states outside the NTR prior to model year 2001 shall be treated as generated in model year 2001.

(ii) In the 2001 model year, a one-time discount rate of 10 percent shall be applied to all credits earned under the provisions of this paragraph (c)(7).

(iii) These credits shall be discounted in accordance with the provisions in paragraph (c)(4) of this section.

(8) Manufacturers may earn and bank credits in the NTR for model years 1997 and 1998. In states without a Section 177 Program effective in model year 1997 or 1998, such credits will be calculated as set forth in paragraphs (a) and (b) of this section, except that the

applicable fleet average NMOG standard shall be 0.25 g/mi NMOG for the averaging set for light light-duty trucks from 0–3750 lbs LVW and light-duty vehicles or 0.32 g/mi NMOG for the averaging set for light light-duty trucks from 3751–5750 lbs LVW. In states that opt into National LEV and have a Section 177 Program effective in model year 1997 or 1998, such credits will equal the unused credits earned in those states.

(i) Emissions credits earned in the NTR prior to the 1999 model year shall be treated as generated in the 1999 model year.

(ii) In the 1999 model year, a one-time discount rate of 10 percent shall be applied to all credits earned under the provisions of this paragraph (c)(8).

(iii) These credits shall be discounted in accordance with the provisions in paragraph (c)(4) of this section.

(9) There are no property rights associated with credits generated under the provisions of this section. Credits are a limited authorization to emit the designated amount of emissions. Nothing in the regulations or any other provision of law should be construed to limit EPA's authority to terminate or limit this authorization through a rulemaking. If EPA were to terminate or limit the authorization to emit associated with emissions credits generated under the provisions of this section, this paragraph (c)(9) would have no effect on manufacturers' ability to opt out of the National LEV program pursuant to § 86.1707.

(d) *Fleet average NMOG debits.* (1) Manufacturers shall offset any debits for a given model year by the fleet average NMOG reporting deadline for the model year following the model year in which the debits were generated. Manufacturers may offset debits by generating credits or acquiring credits generated by another manufacturer. Only credits generated in the NTR may be used to offset NMOG debits generated in the NTR.

(2) The provisions of this paragraph (d)(2) apply only when a manufacturer has a debit balance in the NTR at the end of model year 2000. Manufacturers shall offset any debits incurred in the NTR for model year 2000 by the fleet average NMOG reporting deadline for model year 2001.

(i) A manufacturer may offset debits generated in the NTR in model year 2000 either by generating credits in the NTR in model year 2001 or by applying NTR credits acquired under the provisions of this section.

(ii) If a manufacturer has a debit balance in the NTR at the end of model year 2000, then such manufacturer shall be required to calculate fleet average NMOG values for both the NTR and the ASTR for model year 2001.

(A) The NTR values shall be calculated according to paragraphs (a) and (b) of this section, with the fleet average NMOG standards equal to the standards for model year 2001 in the ASTR.

(B) If such a manufacturer has a credit balance in the NTR for model year 2001, before trading or carrying over credits to the next model year, the manufacturer must apply available NTR credits to offset its debits in the NTR.

(C) Notwithstanding paragraph (b)(4) of this section, for the ASTR and model year 2001, such a manufacturer's available credits or level of debits shall be the sum of credits or debits derived from the respective class A and class B averaging sets for the ASTR and model year 2001, minus any credits used pursuant to paragraph (d)(2)(ii)(B).

(iii) To transfer a credit as an NTR credit earned in model year 2001, a manufacturer must have credits generated in the NTR based on separate fleet average NMOG values calculated for the NTR in model year 2001. In addition, the number of model year 2001 NTR credits available for a manufacturer to transfer cannot exceed the manufacturer's available number of model year 2001 ASTR credits. Any transferred model year 2001 NTR credits shall be deducted from the manufacturer's available model year 2001 ASTR credits.

(3)(i) Failure to meet the requirements of paragraphs (a) through (d) of this section within the required timeframe for offsetting debits will be considered to be a failure to satisfy the conditions upon which the certificate(s) was issued and the individual noncomplying vehicles not covered by

the certificate shall be determined according to this section.

(ii) If debits are not offset within the specified time period, the number of vehicles not meeting the fleet average NMOG standards and not covered by the certificate shall be calculated by dividing the total amount of debits for the model year by the fleet average NMOG standard applicable for the model year and averaging set in which the debits were first incurred. If both averaging sets are in debit, any applicable credits will first be allocated between the averaging sets according to the manufacturer's expressed preferences. Then, the number of vehicles not covered by the certificate shall be calculated using the revised debit values.

(iii) EPA will determine the vehicles for which the condition on the certificate was not satisfied by designating vehicles in those engine families with the highest certification NMOG emission values first and continuing until a number of vehicles equal to the calculated number of noncomplying vehicles as determined above is reached. If this calculation determines that only a portion of vehicles in an engine family contribute to the debit situation, then EPA will designate actual vehicles in that engine family as not covered by the certificate, starting with the last vehicle produced and counting backwards.

(4) If a manufacturer opts out of the National LEV program pursuant to § 86.1707, the manufacturer continues to be responsible for offsetting any debits outstanding on the effective date of the opt-out within the required time period. Any failure to offset the debits will be considered to be a violation of paragraph (d)(1) of this section and may subject the manufacturer to an enforcement action for sale of vehicles not covered by a certificate, pursuant to paragraph (d)(2) of this section.

(5) For purposes of calculating tolling of the statute of limitations, a violation of the requirements of paragraph (d)(1) of this section, a failure to satisfy the conditions upon which a certificate(s) was issued and hence a sale of vehicles not covered by the certificate, all occur upon the expiration of the deadline for offsetting debits specified in paragraph (d)(1) of this section.

(e) *NMOG credit transfers.* (1) EPA may reject NMOG credit transfers if the involved manufacturers fail to submit the credit transfer notification in the annual report.

(2) A manufacturer may not sell credits that are not available for sale pursuant to the provisions in paragraphs (c)(2) or (d)(2) of this section.

(3) Except in instances of fraud on the part of the credit recipient, where a manufacturer sells credits that were not available for sale, the credits shall be treated as valid, and the manufacturer that sold the credits shall be liable for any resulting shortfall.

(4)(i) If a manufacturer transfers a credit that it has not generated pursuant to paragraph (b) of this section or acquired from another party, the manufacturer will be considered to have generated a debit in the model year that the manufacturer transferred the credit. The manufacturer must offset such debits by the deadline for the annual report for that same model year.

(ii) Failure to offset the debits within the required time period will be considered a failure to satisfy the conditions upon which the certificate(s) was issued and will be addressed pursuant to paragraph (d)(3) of this section.

[62 FR 31242, June 6, 1997. Redesignated and amended at 63 FR 983, Jan. 7, 1998; 70 FR 40442, July 13, 2005]

EFFECTIVE DATE NOTE: At 62 FR 31242, June 6, 1997, subpart R was added, effective Aug. 5, 1997. Section 86.1710–99(a) contains information collection and recordkeeping requirements and will not become effective until approval has been given by the Office of Management and Budget.

§ 86.1711–99 Limitations on sale of Tier 1 vehicles and TLEVs.

(a) In the 2001 and subsequent model years, manufacturers may sell Tier 1 vehicles and TLEVs in the NTR only if vehicles with the same engine families are certified and offered for sale in California in the same model year, except as provided under § 86.1707(d)(4).

(b) [Reserved]

[62 FR 31242, June 6, 1997. Redesignated and amended at 63 FR 985, Jan. 7, 1998; 70 FR 40442, July 13, 2005]

§ 86.1712–99 Maintenance of records; submittal of information.

(a) *Maintenance of records.* (1) The manufacturer producing any light-duty vehicles and/or light light-duty trucks subject to the provisions in this subpart shall establish, maintain, and retain the following information in adequately organized and indexed records for each averaging set of each model year:

(i) Model year;

(ii) Averaging set;

(iii) Fleet average NMOG value achieved; and

(iv) All values used in calculating the fleet average NMOG value achieved.

(2) The manufacturer producing any light-duty vehicles and/or light light-duty trucks subject to the provisions in this subpart shall establish, maintain, and retain the following information in adequately organized and indexed records for each vehicle or truck subject to this subpart:

(i) Model year;

(ii) Averaging set;

(iii) EPA engine family, or if applicable for model year 1999 or 2000, the California engine family;

(iv) Assembly plant;

(v) Vehicle identification number;

(vi) NMOG standard to which the vehicle or truck is certified; and

(vii) Information on the point of first sale, including the purchaser, city, and state.

(3) The manufacturer shall retain all records required to be maintained under this section for a period of eight years from the due date for the annual report. Records may be retained as hard copy or reduced to microfilm, ADP diskettes, and so forth, depending on the manufacturer's record retention procedure; provided, that in every case all information contained in the hard copy is retained.

(4) Nothing in this section limits the Administrator's discretion to require the manufacturer to retain additional records or submit information not specifically required by this section.

(5) Pursuant to a request made by the Administrator, the manufacturer shall submit to the Administrator the information that the manufacturer is required to retain.

(6) EPA may void *ab initio* a certificate of conformity for a vehicle certified to National LEV certification standards as set forth or otherwise referenced in § 86.1708 or § 86.1709 for which the manufacturer fails to retain the records required in this section or to provide such information to the Administrator upon request.

(b) *Reporting.* (1) Each covered manufacturer shall submit an annual report. Except as provided in paragraph (b)(2) of this section, the annual report shall contain, for each averaging set, the fleet average NMOG value achieved, all values required to calculate the NMOG value, the number of credits generated or debits incurred, and all the values required to calculate the credits or debits. For each applicable region (NTR and ASTR), the annual report shall contain the resulting balance of credits or debits.

(2) When a manufacturer calculates compliance with the fleet average NMOG standards using the provisions in § 86.1710(a)(3)(iii) or § 86.1710(a)(4)(iii), then the annual report shall state that the manufacturer has elected to use such provision and shall contain, for each averaging set, the fleet average NMOG values as specified in § 86.1710(a)(3)(iii) or § 86.1710(a)(4)(iii).

(3) The annual report shall also include documentation on all credit transactions the manufacturer has engaged in since those included in the last report. Information for each transaction shall include:

(i) Name of credit provider;

(ii) Name of credit recipient;

(iii) Date the transfer occurred;

(iv) Quantity of credits transferred;

(v) Model year in which the credits were earned; and

(vi) Region (NTR or ASTR) to which the credits belong.

(4) Unless a manufacturer reports the data required by this section in the annual production report required under § 86.085–37(b) and subsequent model year provisions, a manufacturer shall submit an annual report for each model year after production ends for all affected vehicles and trucks produced by the manufacturer subject to the provisions of this subpart and no later than May 1 of the calendar year following the given model year. Annual reports

shall be submitted to: Director, Vehicle Programs and Compliance Division, U.S. Environmental Protection Agency, 2565 Plymouth Road, Ann Arbor, Michigan, 48105.

(5) Failure by a manufacturer to submit the annual report in the specified time period for all vehicles and trucks subject to the provisions in this section is a violation of section 203(a)(1) of the Clean Air Act for each subject vehicle and truck produced by that manufacturer.

(6) If EPA or the manufacturer determines that a reporting error occurred on an annual report previously submitted to EPA, the manufacturer's credit or debit calculations will be recalculated. EPA may void erroneous credits, unless transferred, and shall adjust erroneous debits. In the case of transferred erroneous credits, EPA shall adjust the manufacturer's credit or debit balance to reflect the sale of such credits and any resulting generation of debits.

(c) *Notice of opportunity for hearing.* Any voiding of the certificate under paragraph (a)(6) of this section will be made only after EPA has offered the manufacturer concerned an opportunity for a hearing conducted in accordance with § 86.614 for light-duty vehicles or § 86.1014 for light-duty trucks and, if a manufacturer requests such a hearing, will be made only after an initial decision by the Presiding Officer.

[62 FR 31242, June 6, 1997. Redesignated and amended at 63 FR 985, Jan. 7, 1998]

EFFECTIVE DATE NOTE: At 62 FR 31242, June 6, 1997, subpart R was added, effective Aug. 5, 1997. Section 86.1712–99 contains information collection and recordkeeping requirements and will not become effective until approval has been given by the Office of Management and Budget.

§ 86.1713–01 [Reserved]

§ 86.1713–99 Light-duty exhaust durability programs.

The provisions of § 86.094–13 and subsequent model year provisions apply to this subpart, except that: Section 86.094–13(f) and subsequent model year provisions does not apply to this subpart.

[62 FR 31242, June 6, 1997. Redesignated at 63 FR 986, Jan. 7, 1998]

§ 86.1714–01 [Reserved]

§ 86.1714–99 Small volume manufacturers certification procedures.

The provisions of § 86.096–14 and subsequent model year provisions apply to this subpart, except that: Section 86.096–14(c)(7)(i)(A) and subsequent model year provisions does not apply to this subpart.

[62 FR 31242, June 6, 1997. Redesignated at 63 FR 986, Jan. 7, 1998]

§ 86.1715–01 [Reserved]

§ 86.1715–99 [Reserved]

§ 86.1716–01 [Reserved]

§ 86.1716–99 Prohibition of defeat devices.

(a) The provisions of § 86.094–16 and subsequent model year provisions apply to this subpart.

(b) [Reserved]

[62 FR 31242, June 6, 1997. Redesignated and amended at 63 FR 986, Jan. 7, 1998]

§ 86.1717–01 Emission control diagnostic system for 1999 and later light-duty vehicles and light-duty trucks.

(a) The provisions of § 86.1806–01 and subsequent model year provisions do not apply to this subpart.

(b) The requirements in Chapter 6 of the California Regulatory Requirements Applicable to the National Low Emission Vehicle Program (October, 1996) (these requirements are incorporated by reference; see § 86.1) apply to this subpart.

(c) No vehicle shall be certified under the provisions of this subpart unless such vehicle complies with the requirements of section 202(m) (1), (2), (4), and (5) of the Clean Air Act (42 U.S.C. 7521(m) (1), (2), (4) and (5)).

[64 FR 23923, May 4, 1999]

§ 86.1717–99 Emission control diagnostic system for 1999 and later light-duty vehicles and light-duty trucks.

(a) The provisions of § 86.094–17 and subsequent model year provisions do not apply to this subpart.

(b) The requirements in Chapter 6 of the California Regulatory Requirements Applicable to the National Low Emission Vehicle Program (October, 1996) (these requirements are incorporated by reference; see § 86.1) apply to this subpart.

(c) No vehicle shall be certified under the provisions of this subpart unless such vehicle complies with the requirements of section 202(m)(1), (2), (4), and (5) of the Clean Air Act (42 U.S.C. 7521(m)(1), (2), (4) and (5)).

[62 FR 31242, June 6, 1997. Redesignated at 63 FR 986, Jan. 7, 1998]

§§ 86.1718–99—86.1720–99 [Reserved]

§ 86.1721–01 Application for certification.

The provisions of § 86.1844–01 and subsequent model year provisions apply to this subpart, with the following additions to the part 1 and part 2 applications:

(a) For TLEVs, LEVs, and ULEVs not certified exclusively on gasoline, projected U.S. sales data and fuel economy data 19 months prior to January 1 of the calendar year with the same numerical designation as the model year for which the vehicles are certified, and projected U.S. sales data for all vehicles, regardless of operating fuel or vehicle emission category, sufficient to enable the Administrator to select a test fleet representative of the vehicles (or engines) for which certification is requested at the time of certification.

(b) For ZEVs and hybrid electric vehicles, the certification part 1 application shall include the following:

(1) Identification and description of the vehicle(s) covered by the application.

(2) Identification of the vehicle weight category to which the vehicle is certifying: LDV, LDT 0–3750 lbs LVW, LDT 3751–5750 lbs LVW (state test weight range), and the curb weight and gross vehicle weight rating of the vehicle.

(3) Identification and description of the propulsion system for the vehicle.

(4) Identification and description of the climate control system used on the vehicle.

(5) Projected number of vehicles sold in the U.S., and projected U.S. sales.

(6) For electric and hybrid electric vehicles, identification of the energy usage in kilowatt-hours per mile from the point when electricity is introduced from the electrical outlet and the operating range in miles of the vehicle when tested in accordance with the All-Electric Range Test provisions in § 86.1770.

(7) If the vehicle is equipped with a fuel fired heater, a description of the control system logic of the fuel fired heater, including an evaluation of the conditions under which the fuel fired heater can be operated and an evaluation of the possible operational modes and conditions under which evaporative emissions can exist. Vehicles which utilize fuel fired heaters which can be operated at ambient temperatures above 40 deg. F or which cannot be demonstrated to have zero evaporative emissions under any and all possible operation modes and conditions shall not be certified as ZEVs.

(8) For ZEVs and HEVs which use fuel fired heaters, the manufacturer shall provide the exhaust emissions value per mile produced by the auxiliary fuel fired heater. This shall be accomplished by determining heater emissions in grams per minute when operating at a maximum heating capacity for a period of 20 minutes, and multiplying that number by 3.6 minutes per mile. At the time of certification, manufacturers shall submit their test plan which describes the procedure used to determine the mass emissions of the fuel fired heater.

(9) All information necessary for proper and safe operation of the vehicle, including information on the safe handling of the battery system, emergency procedures to follow in the event of battery leakage or other malfunctions that may affect the safety of the vehicle operator or laboratory personnel, method for determining battery state-of-charge, battery charging capacity and recharging procedures, and any other relevant information as determined by the Administrator.

(c) For all vehicles subject to the provisions of § 86.1717, with its part 1 application for certification a description of the malfunction and diagnostic system to be installed on the vehicles. (The vehicles shall not be certified unless the

Administrator finds that the malfunction and diagnostic system complies with the requirements of § 86.1717.).

(d) The comprehensive list of test results and the applicable certification levels required under § 86.1844–01(d)(7) shall include the following information:

(1) For all TLEVs, LEVs, and ULEVs certifying on a fuel other than conventional gasoline, manufacturers shall multiply the NMOG exhaust certification level for each emission-data vehicle by the appropriate reactivity adjustment factor listed in § 86.1777(d)(2)(i) or established by the Administrator pursuant to Appendix XVII of this part to demonstrate compliance with the applicable NMOG emission standard. For all TLEVs, LEVs, and ULEVs certifying on natural gas, manufacturers shall multiply the NMOG exhaust certification level for each emission-data vehicle by the appropriate reactivity adjustment factor listed in § 86.1777(d)(2)(i) or established by the Administrator pursuant to Appendix XVII of this part and add that value to the product of the methane exhaust certification level for each emission-data vehicle and the appropriate methane reactivity adjustment factor listed in § 86.1777(d)(2)(ii) or established by the Administrator pursuant to Appendix XVII of this part to demonstrate compliance with the applicable NMOG emission standard. Manufacturers requesting to certify to existing standards utilizing an adjustment factor unique to its vehicle/fuel system must follow the data requirements described in Appendix XVII of this part. A separate formaldehyde exhaust certification level shall also be provided for demonstrating compliance with emission standards for formaldehyde.

(2) [Reserved]

(e) Manufacturers shall submit the standard phase-in compliance information required in § 86.1844–01 (d)(13) and (e)(4) with respect to the applicable standards of the subpart.

(f) For each engine family certified to TLEV, LEV, or ULEV standards, manufacturers shall submit with the certification application, an engineering evaluation demonstrating that a discontinuity in emissions of non-methane organic gases, carbon monoxide, oxides of nitrogen and formaldehyde measured on the Federal Test Procedure (subpart B of this part) does not occur in the temperature range of 20 to 86 deg F. For diesel vehicles, the engineering evaluation shall also include particulate emissions.

[64 FR 23923, May 4, 1999]

§ 86.1721–99 Application for certification.

The provisions of § 86.096–21 and subsequent model year provisions apply to this subpart, with the following exceptions and additions:

(a) The provisions of § 86.096–21(b)(2) and subsequent model year provisions do not apply to this subpart. The following shall instead apply to this subpart:

(1) For TLEVs, LEVs, and ULEVs not certified exclusively on gasoline, projected U.S. sales data and fuel economy data 19 months prior to January 1 of the calendar year with the same numerical designation as the model year for which the vehicles are certified, and projected U.S. sales data for all vehicles, regardless of operating fuel or vehicle emission category, sufficient to enable the Administrator to select a test fleet representative of the vehicles (or engines) for which certification is requested at the time of certification.

(2) [Reserved]

(b) For ZEVs and hybrid electric vehicles, the certification application shall include the following:

(1) Identification and description of the vehicle(s) covered by the application.

(2) Identification of the vehicle weight category to which the vehicle is certifying: LDV, LDT 0–3750 lbs LVW, LDT 3751–5750 lbs LVW (state test weight range), and the curb weight and gross vehicle weight rating of the vehicle.

(3) Identification and description of the propulsion system for the vehicle.

(4) Identification and description of the climate control system used on the vehicle.

(5) Projected number of vehicles sold in the U.S., and projected U.S. sales.

(6) For electric and hybrid electric vehicles, identification of the energy usage in kilowatt-hours per mile from

the point when electricity is introduced from the electrical outlet and the operating range in miles of the vehicle when tested in accordance with the All-Electric Range Test provisions in § 86.1770.

(7) If the vehicle is equipped with a fuel fired heater, a description of the control system logic of the fuel fired heater, including an evaluation of the conditions under which the fuel fired heater can be operated and an evaluation of the possible operational modes and conditions under which evaporative emissions can exist. Vehicles which utilize fuel fired heaters which can be operated at ambient temperatures above 40 °F or which cannot be demonstrated to have zero evaporative emissions under any and all possible operation modes and conditions shall not be certified as ZEVs.

(8) For ZEVs and HEVs which use fuel fired heaters, the manufacturer shall provide the exhaust emissions value per mile produced by the auxiliary fuel fired heater. This shall be accomplished by determining heater emissions in grams per minute when operating at a maximum heating capacity for a period of 20 minutes, and multiplying that number by 3.6 minutes per mile. At the time of certification, manufacturers shall submit their test plan which describes the procedure used to determine the mass emissions of the fuel fired heater.

(9) All information necessary for proper and safe operation of the vehicle, including information on the safe handling of the battery system, emergency procedures to follow in the event of battery leakage or other malfunctions that may affect the safety of the vehicle operator or laboratory personnel, method for determining battery state-of-charge, battery charging capacity and recharging procedures, and any other relevant information as determined by the Administrator.

(c) For all vehicles subject to the provisions of § 86.1717, with its application for certification a description of the malfunction and diagnostic system to be installed on the vehicles. (The vehicles shall not be certified unless the Administrator finds that the malfunction and diagnostic system complies with the requirements of § 86.1717.).

[62 FR 31242, June 6, 1997. Redesignated and amended at 63 FR 986, Jan. 7, 1998]

§ 86.1722–01 [Reserved]

§ 86.1722–99 [Reserved]

§ 86.1723–01 [Reserved]

§ 86.1723–99 Required data.

The provisions of § 86.096–23 and subsequent model year provisions apply to this subpart, with the following exceptions and additions:

(a) The provisions of § 86.096–23(c)(1) and subsequent model year provisions apply to this subpart, with the following addition:

(1) For all TLEVs, LEVs, and ULEVs certifying on a fuel other than conventional gasoline, manufacturers shall multiply the NMOG exhaust certification level for each emission-data vehicle by the appropriate reactivity adjustment factor listed in § 86.1777(d)(2)(i) or established by the Administrator pursuant to Appendix XVII of this part to demonstrate compliance with the applicable NMOG emission standard. For all TLEVs, LEVs, and ULEVs certifying on natural gas, manufacturers shall multiply the NMOG exhaust certification level for each emission-data vehicle by the appropriate reactivity adjustment factor listed in § 86.1777(d)(2)(i) or established by the Administrator pursuant to Appendix XVII of this part and add that value to the product of the methane exhaust certification level for each emission-data vehicle and the appropriate methane reactivity adjustment factor listed in § 86.1777(d)(2)(ii) or established by the Administrator pursuant to Appendix XVII of this part to demonstrate compliance with the applicable NMOG emission standard. Manufacturers requesting to certify to existing standards utilizing an adjustment factor unique to its vehicle/fuel system must follow the data requirements described in Appendix XVII of this part. A separate formaldehyde exhaust certification level shall also be provided for demonstrating compliance with emission standards for formaldehyde.

(2) [Reserved]

(b) The provisions of § 86.096–23(l) introductory text and subsequent model year provisions do not apply to this subpart. The following shall instead apply to this subpart:

(1) Additionally, manufacturers certifying vehicles shall submit for each model year 2001 through 2004 light-duty vehicle and light light-duty truck engine family, the information listed in § 86.096–23(l)(1) and (2). If applicable, manufacturers shall also submit ''Alternative or Equivalent Phase-in Schedules'' before or during calendar year 2001 for light-duty vehicles and light light-duty trucks.

(2) [Reserved]

(c) In addition to the provisions of § 86.096–23 and subsequent model year provisions, the following requirements shall apply to this subpart:

(1) For each engine family certified to TLEV, LEV, or ULEV standards, manufacturers shall submit with the certification application, an engineering evaluation demonstrating that a discontinuity in emissions of nonmethane organic gases, carbon monoxide, oxides of nitrogen and formaldehyde measured on the Federal Test Procedure (subpart B of this part) does not occur in the temperature range of 20 to 86 deg F. For diesel vehicles, the engineering evaluation shall also include particulate emissions.

(2) [Reserved]

[63 FR 986, Jan. 7, 1998]

§ 86.1724–01 Emission data vehicle selection.

(a) [Reserved]

(b) The provisions of § 86.1828–01 and subsequent model year provisions apply to this subpart with the following additions:

(1) For TLEVs, LEVs, ULEVs, and ZEVs certifying according to the provisions of this subpart, a manufacturer may substitute emission data vehicles selected by the California Air Resources Board criteria instead of using the criteria specified in §§ 86.1828–01(a) through (d) and subsequent model year provisions.

(2) For vehicles certified to the SFTP exhaust emission standards, if air conditioning is projected to be available on any vehicles within the engine family, the selection of engine codes will be limited selections which have air conditioning available and would require that any vehicle selected under this section has air conditioning installed and operational.

[64 FR 23924, May 4, 1999]

§ 86.1724–99 Test vehicles and engines.

The provisions of § 86.096–24 and subsequent model year provisions apply to this subpart, with the following exceptions and additions:

(a) The provisions of § 86.096–24(a)(1) and subsequent model year provisions apply to this subpart, with the following addition:

(1) All engines classified in the same engine family shall be certified to identical exhaust emission standards.

(2) [Reserved]

(b) The provisions of § 86.096–24(b) and subsequent model year provisions apply to this subpart with the following additions:

(1) For TLEVs, LEVs, ULEVs, and ZEVs certifying according to the provisions of this subpart, a manufacturer may substitute emission data vehicles selected by the California Air Resources Board criteria instead of using the criteria specified in § 86.096–24(b)(1)(i), (ii), and (iv) and subsequent model year provisions.

(2) For vehicles certified to the SFTP exhaust emission standards, if air conditioning is projected to be available on any vehicles within the engine family, the selection of engine codes will be limited selections which have air conditioning available and would require that any vehicle selected under this section has air conditioning installed and operational.

[62 FR 31242, June 6, 1997. Redesignated and amended at 63 FR 986, Jan. 7, 1998]

§ 86.1725–01 Allowable maintenance.

This section includes text that specifies requirements that differ from § 86.1725–99. Where a paragraph in § 86.1725–99 is identical and applicable to this section, this may be indicated by specifying the corresponding paragraph and the statement ''[Reserved]. For guidance see § 86.1725–99.'' The provisions of § 86.1834–01 and subsequent

model year provisions apply to this subpart, with the following additions:

(a) Hybrid electric vehicles that use Otto-cycle or diesel engines are subject to the applicable Otto-cycle or diesel engine maintenance requirements of § 86.1834–01(b) through (e) and subsequent model year provisions.

(b) through (c) [Reserved]. For guidance see § 86.1725–99.

(d) When air conditioning SFTP exhaust emission tests are required, the manufacturer must document that the vehicle's air conditioning system is operating properly and in a representative condition. Required air conditioning system maintenance is performed as unscheduled maintenance that does not require the Administrator's approval.

[64 FR 23924, May 4, 1999]

§ 86.1725–99 Maintenance.

The provisions of § 86.094–25 and subsequent model year provisions apply to this subpart, with the following additions:

(a) Hybrid electric vehicles that use Otto-cycle or diesel engines are subject to the applicable Otto-cycle or diesel engine maintenance requirements of § 86.094–25 (b) through (e) and subsequent model year provisions.

(b) Manufacturers of series hybrid electric vehicles and parallel hybrid electric vehicles shall be required to incorporate into the vehicles a separate odometer or other device subject to the approval of the Administrator that can accurately gauge the mileage accumulation on the engines that are used in these vehicles.

(c)(1) The manufacturer shall equip the vehicle with a maintenance indicator consisting of a light that shall activate automatically by illuminating the first time the minimum performance level is observed for all battery system components. Possible battery system components requiring monitoring are:

(i) Battery water level;

(ii) Temperature control;

(iii) Pressure control;

(iv) Other parameters critical for determining battery condition.

(2) The manufacturer of a hybrid electric vehicle shall equip the vehicle with a useful life indicator for the battery system consisting of a light that shall illuminate the first time the battery system is unable to achieve an all-electric operating range (starting from a full state-of-charge) that is at least 75% of the range determined for the vehicle in the All-Electric Range Test (see § 86.1770) and submitted in the certification application.

(3) Hybrid electric vehicle battery system. Manufacturers shall maintain the battery system according to the requirements in paragraph (c)(1) of this section.

(d) When air conditioning SFTP exhaust emission tests are required, the manufacturer must document that the vehicle's air conditioning system is operating properly and that system parameters are within operating design specifications prior to testing. Required air conditioning system maintenance is performed as unscheduled maintenance that does not require the Administrator's approval.

[62 FR 31242, June 6, 1997. Redesignated and amended at 63 FR 986, Jan. 7, 1998]

§ 86.1726–01 [Reserved]

§ 86.1726–99 Mileage and service accumulation; emission measurements.

The provisions of § 86.096–26 and subsequent model year provisions apply to this subpart, with the following exceptions and additions:

(a) The provisions of § 86.096–26(a)(1) and subsequent model year provisions do not apply to this subpart. The following shall instead apply to this subpart:

(1) Section 86.096–26(a) and subsequent model year provisions applies to light-duty vehicles and light-duty trucks, except ZEVs which shall be exempt from all mileage and service accumulation, durability-data vehicle, and emission-data vehicle testing requirements.

(2) [Reserved]

(b) The provisions of § 86.096–26(a)(2) and subsequent model year provisions do not apply to this subpart. The following shall instead apply to this subpart:

(1) The procedure for mileage accumulation shall be the Durability Driving Schedule as specified in appendix IV of this part. A modified procedure

(Alternative Service Accumulation Durability Program, § 86.094–13(e) and subsequent model year provisions) may also be used if approved in advance by the Administrator. All light-duty vehicles and light-duty trucks shall accumulate mileage at a measured curb weight that is within 100 pounds of the estimated curb weight. If the vehicle weight is within 100 pounds of being included in the next higher inertia weight class as specified in § 86.129, the manufacturer may elect to conduct the respective emission tests at the higher weight. All mileage accumulation of hybrid electric vehicles shall be conducted with the battery pack at the manufacturer's indicated lowest state-of-charge at the beginning of the test cycle. At no time throughout mileage accumulation shall the battery pack be charged using any off-board charging source.

(2) [Reserved]

(c) The provisions of § 86.096–26(a)(3)(i) and (ii) and subsequent model year provisions apply to this subpart, with the following addition:

(1) For vehicles certified to the SFTP exhaust emission standards, complete exhaust emission tests will include both the FTP and the SFTP tests. The Administrator will accept the manufacturer's determination of the mileage at which the engine-system combination is stabilized for emission data testing if (prior to testing) a manufacturer determines that the interval chosen yields emissions performance that is stable and representative of design intent. Sufficient mileage should be accumulated to reduce the possible effects of any emissions variability that is the result of insufficient vehicle operation. Of primary importance in making this determination is the behavior of the catalyst, EGR valve, trap oxidizer or any other part of the ECS which may have non-linear aging characteristics. In the alternative, the manufacturer may elect to accumulate 4,000 mile ±250 miles on each test vehicle within an engine family without making a determination.

(2) [Reserved]

(d) The provisions of § 86.096–26(a)(4)(i) and (ii) and subsequent model year provisions do not apply to this subpart. The following shall instead apply to this subpart:

(1) For Otto-cycle and diesel vehicles and battery assisted combustion engine vehicles that use Otto-cycle or diesel engines:

(i) Prior to initiation of mileage accumulation in a durability-data vehicle, manufacturers must establish the mileage test interval for durability-data vehicle testing of the engine family. Once testing has begun on a durability-data vehicle, the durability test interval for that family may not be changed. At a minimum, multiple tests must be performed at 5,000 miles, 50,000 miles, and the final mileage point as long as they meet the requirements of appendix XV of this part. The Administrator will accept durability test interval schedules determined by the manufacturer. The testing must provide a DF confidence level equal to or better than the confidence level using the former fixed mileage test and scheduled maintenance intervals. The procedure for making this determination is specified in appendix XV of this part. The mileage intervals between test points must be approximately of equal length. The ±250 mile test point tolerance and the requirement that tests be conducted before and after scheduled maintenance is still mandatory. Emission control systems for Otto-cycle engines that have step function changes designed into the control system must use the 5,000 mile test interval schedule.

(ii) Testing before and after scheduled (or unscheduled) maintenance points must be conducted, and these data are to be included in the deterioration factor calculation. Testing before unscheduled maintenance may be omitted with the prior consent of the Administrator when testing would be dangerous to a vehicle or an operator. The number of tests before and after scheduled maintenance and the mileage intervals between test points should be approximately equal. Durability test interval schedules with multiple testing at test points within 10,000 miles of or at the 50,000 mile and the final mileage test point must be submitted for approval. Multiple testing at maintenance mileage tests points within 10,000 miles of the 50,000 mile

and the final mileage test points may be approved if it can be demonstrated by previously generated data that the emission effects of the maintenance are insignificant.

(iii) For engine families that are to be certified to the full useful life emission standards, each exhaust emission durability-data vehicle shall be driven with all emission control systems installed and operating, for the full useful life or such lesser distance as the Administrator may agree to as meeting the objective of this procedure. Durability tests shall be at every 5,000 miles, from 5,000 miles to the full useful life, however, the above procedures may be used to determine alternate test intervals subject to the following:

(A) For engine families that are to be certified to the full useful life emission standards, durability vehicles may accumulate less than the full useful life if the manufacturer submits other data or information sufficient to demonstrate that the vehicle is capable of meeting the applicable emission standards for the full useful life. At a minimum, 75% of the full useful life shall be accumulated.

(B) For the purpose of conducting mileage accumulation on light-duty hybrid electric vehicles, the full useful life of the auxiliary power unit shall be defined as 50,000 miles for a Type A hybrid electric vehicle, 75,000 miles for a Type B hybrid electric vehicle, and 100,000 miles for a Type C hybrid electric vehicle.

(iv) Alternative durability plans may also be used if the manufacturer provides a demonstration that the alternative plan provides equal or greater confidence that the vehicles will comply in-use with the emission standards. All alternative durability plans are subject to approval in advance by the Administrator.

(2) For diesel vehicles equipped with periodically regenerating trap oxidizer systems, at least four regeneration emission tests (see §§ 86.106 through 86.145) shall be made. The pollutant mass emission calculation procedures for vehicles equipped with periodically regenerating trap oxidizer systems are included in appendix XVI of this part. With the advance approval of the Administrator, the manufacturer may install: A manual override switch capable of preventing (i.e., delaying until the switch is turned off) the start of the regeneration process; and a light which indicates when the system would initiate regeneration if it had no override switch. Upon activation of the override switch the vehicle will be operated on a dynamometer to precondition it for the regeneration emission test in accordance with §§ 86.132 and 86.1772. The Urban Dynamometer Driving Schedule (UDDS) that is in progress at the time when the light comes on shall be completed and the vehicle shall proceed to the prescribed soak period followed by testing. With the advance approval of the Administrator, the manual override switch will be turned off at some predetermined point in the testing sequence, permitting the regeneration process to proceed without further manual interaction. The mileage intervals between test points shall be approximately equal. The first regeneration emission test shall be made at the 5,000 mile point. The regeneration emission tests must provide a deterioration factor confidence level equal to or better than the confidence level achieved by performing regeneration emission tests at the following mileage points: 5,000; 25,000; 50,000; 75,000; and 100,000. The procedure for making this determination is shown in appendix XV of this part.

(3) For gasoline-, gaseous-, and alcohol-fueled vehicles that are certified by a whole-vehicle durability protocol, the specified evaporative durability test points are at 5,000, 40,000, 75,000, and 100,000 miles. These requirements are also applicable to hybrid electric vehicles. With the exception of flexible-fuel vehicles, a manufacturer may conduct evaporative testing at test points used for exhaust emission durability testing, provided that the same deterioration confidence level for the evaporative emission DF determination is retained (see appendix XIV of this part).

(4) For flexible-fuel vehicles certifying to TLEV, LEV, or ULEV standards, the test schedule shall include exhaust emission tests at 5,000 miles, 10,000 miles, and every 10,000 miles thereafter to the final mileage point

using M85 or E85 and certification gasoline. For all flexible-fuel vehicles, if evaporative emission testing is conducted, exhaust and evaporative emission tests shall also be conducted using M35 or E10, or another approved fuel, at the mileage points where M85 or E85 testing is conducted. The results of these exhaust and evaporative emission tests will be used by the Administrator to evaluate the vehicle's emission control deterioration with various fuels (M85, M35, and unleaded gasoline; See fuel specifications in § 86.1771). Only the M85 or E85 and certification gasoline exhaust emission results and the M35 or E10 evaporative emission results will be used to determine applicable exhaust and evaporative emission deterioration factors, respectively, as required in § 86.1728 (Compliance with Emission Standards).

(e) The provisions of § 86.096–26(a)(5)(i) and subsequent model year provisions apply to this subpart, with the following addition:

(1) In addition, the emission tests performed on emission-data vehicles and durability-data vehicles shall be non-regeneration emission tests for diesel light-duty vehicles and light-duty trucks equipped with periodically regenerating trap oxidizer systems. For any of these vehicles equipped with continually regenerating trap oxidizer systems, manufacturers may use the provisions applicable to periodically regenerating trap oxidizer systems as an option. If such an option is elected, all references in these procedures to vehicles equipped with periodically regenerating trap oxidizer systems shall be applicable to the vehicles equipped with continually regenerating trap oxidizer systems.

(2) [Reserved]

(f) The provisions of § 86.096–26(a)(8) and subsequent model year provisions do not apply to this subpart. The following shall instead apply to this subpart:

(1) Once a manufacturer submits the information required in § 86.096–26(a)(7) and subsequent model year provisions for a durability-data vehicle, the manufacturer shall continue to run the vehicle to 50,000 miles if the family is certified to 50,000 mile emission standards or to the full useful life if it is certified to emission standards beyond 50,000 miles (or to a lesser distance that the Administrator may have previously agreed to), and the data from the vehicle will be used in the calculations under § 86.094–28 and subsequent model year provisions. Discontinuation of a durability-data vehicle shall be allowed only with the consent of the Administrator.

(2) [Reserved]

(g) The provisions of § 86.096–26(b) and subsequent model year provisions do not apply to this subpart.

(h)(1) The exhaust emissions shall be measured from all exhaust emission data vehicles tested in accordance with the federal Highway Fuel Economy Test (HWFET; 40 CFR part 600, subpart B). The oxides of nitrogen emissions measured during such tests shall be multiplied by the oxides of nitrogen deterioration factor computed in accordance with § 86.094–28 and subsequent model year provisions, and then rounded and compared with the applicable emission standard in §§ 86.1708 and 86.1709. All data obtained pursuant to this paragraph (h)(1) shall be reported in accordance with procedures applicable to other exhaust emissions data required pursuant to these procedures. Hybrid electric vehicles shall be tested with the battery state-of-charge set such that one of the following two conditions is satisfied:

(i) The state-of-charge is at the lowest level allowed by the control unit of the auxiliary power unit; or

(ii) The state-of-charge is set such that auxiliary power unit operation will be at its maximum level at the beginning and throughout the emission test.

(2) In the event that one or more of the manufacturer's emission data vehicles fail the applicable HWFET standard in §§ 86.1708 and 86.1709, the manufacturer may submit to the Administrator engineering data or other evidence showing that the system is capable of complying with the standard. If the Administrator finds, on the basis of an engineering evaluation, that the system can comply with the HWFET

standard, he or she may accept the information supplied by the manufacturer in lieu of vehicle test data.

[62 FR 31242, June 6, 1997. Redesignated and amended at 63 FR 987, Jan. 7, 1998]

§ 86.1727–99 [Reserved]

§ 86.1728–01 Compliance with emission standards for the purpose of certification.

The provisions of § 86.1837–01 and subsequent model year provisions apply with respect to the applicable standards of this subpart.

[64 FR 23924, May 4, 1999]

§ 86.1728–99 Compliance with emission standards.

The provisions of § 86.094–28 and subsequent model year provisions apply to this subpart, with the following exceptions and additions:

(a) The provisions of § 86.094–28(a)(1) and subsequent model year provisions do not apply to this subpart. The following shall instead apply to this subpart:

(1) The provisions of § 86.094–28(a) and subsequent model year provisions apply to light-duty vehicles and light light-duty trucks, except ZEVs.

(2) [Reserved]

(b) The provisions of § 86.094–28(a)(4)(i) and subsequent model year provisions do not apply to this subpart. The following shall instead apply to this subpart:

(1) Separate emission deterioration factors shall be determined from the exhaust emission results of the durability-data vehicle(s) for each engine-system combination. A separate factor shall be established for exhaust HC (non-alcohol vehicles, non-TLEVs, non-LEVs, and non-ULEVs), exhaust OMHCE or OMNMHCE (alcohol vehicles that are not TLEVs, LEVs, or ULEVs), exhaust NMOG (all TLEVs, LEVs, ULEVs), exhaust formaldehyde (alcohol vehicles, TLEVs, LEVs, ULEVs), exhaust CO, exhaust NO_X, and exhaust particulate (diesel vehicles only) for each engine-system combination. A separate evaporative emission deterioration factor shall be determined for each evaporative emission family-evaporative emission control system combination from the testing conducted by the manufacturer (gasoline- and alcohol-fueled vehicles only). Separate emission correction factors (diesel light-duty vehicles and light-duty trucks equipped with periodically regenerating trap oxidizer systems only) shall be determined from the exhaust emission results of the durability-data vehicle(s) for each engine-system combination. A separate factor shall be established for exhaust HC (non-alcohol vehicles, non-TLEVs, non-LEVs, and non-ULEVs), exhaust OMHCE or OMNMHCE (alcohol vehicles that are not TLEVs, LEVs, or ULEVs), exhaust NMOG (TLEVs, LEVs, ULEVs), exhaust CO, exhaust NO_X, and exhaust particulate for each engine-system combination.

(2) [Reserved]

(c) The provisions of § 86.094–28(a)(4)(i)(A)(*4*) and subsequent model year provisions do not apply to this subpart. The following shall instead apply to this subpart:

(1) The manufacturer must use the outlier identification procedure set forth in appendix VIII of this part to test for irregular data from a durability-data set. If any data point is identified as a statistical outlier, the Administrator shall determine, on the basis of an engineering analysis of the causes of the outlier submitted by the manufacturer, whether the outlier is to be rejected. The outlier shall be rejected only if the Administrator determines that the outlier does not reflect representative characteristics of the emission control system, *i.e.*, the outlier is a result of an emission control system anomaly, test procedure error, or an extraordinary circumstance not expected to recur. Only the identified outlier shall be eliminated; other data at that test point (i.e., data for other pollutants) shall not be eliminated unless the Administrator determines, based on the engineering analysis, that they also do not reflect representative characteristics of the emission control system. Where the manufacturer chooses to apply both the outlier procedure and averaging to the same data set, the outlier procedure shall be completed prior to applying the averaging procedure. All durability test data, including any

outliers and the manufacturer's engineering analysis, shall be submitted with the final application.

(2) [Reserved]

(d) The provisions of § 86.094–28(a)(4)(i)(B) and subsequent model year provisions do not apply to this subpart. The following shall instead apply to this subpart:

(1) All applicable exhaust emission results shall be plotted as a function of the mileage on the system, rounded to the nearest mile, and the best fit straight lines, fitted by the method of least squares, shall be drawn through all these data points. The emission data will be acceptable for use in the calculation of the deterioration factor only if the interpolated 4,000-mile, 50,000-mile, and full useful life points on this line are within the applicable emission standards in §§ 86.1708 and 86.1709. For hybrid electric vehicles, the emission data will be acceptable for use in the calculation of the deterioration factor only if the engine mileage points corresponding to the interpolated 4,000 mile, 50,000 mile, and full useful life points of the vehicle on this line are within the applicable emission standards in §§ 86.1708 and 86.1709. The engine mileage points shall be determined based on the test schedule submitted to the Administrator as required in § 86.096–26. As an exception, the Administrator will review the data on a case-by-case basis and may approve its use in those instances where the best fit straight line crosses an applicable standard but no data point exceeds the standard or when the best fit straight line crosses the applicable standard at the 4,000-mile point but the 5,000-mile actual test point and the 50,000 mile and full useful life interpolated points are both below the standards. A multiplicative exhaust emission deterioration factor shall be calculated for each engine system combination as follows:

(i) For engine families certified to 50,000 mile emissions standards: Factor = Exhaust emissions interpolated to 50,000 miles divided by exhaust emissions interpolated to 4,000 miles.

(ii) For engine families certified to full useful life emissions standards beyond 50,000 miles: Factor = Exhaust emissions interpolated to the full useful life divided by exhaust emissions interpolated to 4,000 miles.

(2) [Reserved]

(e) The following requirements shall be in addition to the provisions of § 86.094–28(a)(4) and subsequent model year provisions:

(1)(i) The regeneration exhaust emission data (diesel light-duty vehicles and light-duty trucks equipped with periodically regenerating trap oxidizer systems only) from the tests required under § 86.096–26(a)(4) and subsequent model year provisions shall be used to determine the regeneration exhaust emissions interpolated to the 50,000-mile point. The regeneration exhaust emission results shall be plotted as a function of the mileage on the system, rounded to the nearest mile, and the best fit straight lines, fitted by the method of least squares, shall be drawn through all these data points. The interpolated 50,000-mile point of this line shall be used to calculate the multiplicative exhaust emission correction factor for each engine-system combination as follows:

$$\text{Factor} = 1 + \frac{R-1}{4505} n$$

where:

R = the ratio of the regeneration exhaust emissions interpolated to 50,000 miles to the non-regeneration exhaust emissions interpolated to 50,000 miles.

n = the number of complete regenerations which occur during the durability test.

(ii) The interpolated values determined in paragraph (e)(1)(i) of this section shall be carried out to a minimum of four places to the right of the decimal point before dividing one by the other to determine the correction factor. The results shall be rounded to three places to the right of the decimal point in accordance with the Rounding-Off Method specified in ASTM E 29–90, Standard Practice for Using Significant Digits in Test Data to Determine Conformance with Specifications (incorporated by reference; see § 86.1). For applicability to gaseous emission standards under the 100,000 mile option, R will be determined based upon projected 100,000 mile emissions.

(2) [Reserved]

(f) The provisions of § 86.094–28(a)(4)(ii)(A) and subsequent model

year provisions do not apply to this subpart. The following shall instead apply to this subpart:

(1) The official exhaust emission test results for each emission-data vehicle at the 4,000 mile test point shall be multiplied by the appropriate deterioration factor, and correction factor (diesel light-duty vehicles and light-duty trucks equipped with periodically regenerating trap oxidizer systems only): Provided: that if a deterioration factor as computed in § 86.094–28(a)(4)(i)(B) and subsequent model year provisions or a correction factor as computed in paragraph (e) of this section is less than one, that deterioration factor or correction factor shall be one for the purposes of this paragraph (f).

(2) [Reserved]

(g) The provisions of § 86.094–28(a)(4)(iii) and subsequent model year provisions do not apply to this subpart. The following shall instead apply to this subpart:

(1) The emissions to compare with the standard (or the family particulate emission limit, as appropriate) shall be the adjusted emissions of § 86.094–28(a)(4)(ii) (A) and (B) and subsequent model year provisions for each emission-data vehicle. Before any emission value is compared with the standard (or the family particulate limit, as appropriate), it shall be rounded to one significant figure beyond the number of significant figures contained in the standard (or the family particulate emission limit, as appropriate) in accordance with the Rounding-Off Method specified in ASTM E 29–90, Standard Practice for Using Significant Digits in Test Data to Determine Conformance with Specifications (incorporated by reference; see § 86.1). The rounded emission values may not exceed the standard (or the family particulate emission limit, as appropriate). Fleet average NMOG value calculations shall be rounded to four significant figures in accordance with the Rounding-Off Method specified in ASTM E 29–90, Standard Practice for Using Significant Digits in Test Data to Determine Conformance with Specifications (incorporated by reference; see § 86.1) before comparing with fleet average NMOG requirements.

(2) [Reserved]

(h) The provisions of § 86.094–28(b) and subsequent model year provisions do not apply to this subpart.

[62 FR 31242, June 6, 1997. Redesignated at 63 FR 987, Jan. 7, 1998]

§§ 86.1729–99—86.1733–99 [Reserved]

§ 86.1734–01 [Reserved]

§ 86.1734–99 Alternative procedure for notification of additions and changes.

The provisions of § 86.082–34 and subsequent model year provisions apply to this subpart, with the following exceptions and additions:

(a) The provisions of § 86.082–34(a) and subsequent model year provisions apply to this subpart, with the following addition:

(1) A manufacturer must notify the Administrator within 10 working days of making an addition of a vehicle to a certified engine family or a change in a vehicle previously covered by certification. The manufacturer shall also submit, upon request of the Administrator, the following items:

(i) service bulletin;

(ii) driveability statement;

(iii) test log;

(iv) maintenance log.

(2) All running changes and field fixes that do not adversely affect the system durability are deemed approved unless disapproved by the Administrator within 30 days of the receipt of the running change or field fix request. A change not specifically identified in the manufacturer's application must also be reported to the Administrator if the change may adversely affect engine or emission control system durability. Examples of such changes include any change that could affect durability, thermal characteristics, deposit formation, or exhaust product composition, i.e., combustion chamber design, cylinder head material, camshaft profile, computer modifications, turbocharger, intercooler wastegate characteristics, and transmission or torque converter specifications. The manufacturer is required to update and submit to the Administrator the ''supplemental data sheet'' for all running changes and field fixes implemented

with the change notification. The manufacturer shall submit, on a monthly basis, by engine family, a list of running changes/field fixes giving the document number date submitted and a brief description of the change.

(b) [Reserved]

[62 FR 31242, June 6, 1997. Redesignated at 63 FR 987, Jan. 7, 1998]

§ 86.1735–01 Labeling.

The following requirements shall apply to TLEVs, LEVs, ULEVs, and ZEVs certified under the provisions of this subpart:

(a) The requirements in § 86.1807–01 and subsequent model year provisions do not apply to this section.

(b) The requirements in Chapter 7 of the California Regulatory Requirements Applicable to the National Low Emission Vehicle Program (October, 1996) shall apply. These requirements are incorporated by reference (see § 86.1).

[64 FR 23924, May 4, 1999]

§ 86.1735–99 Labeling.

The following requirements shall apply to TLEVs, LEVs, ULEVs, and ZEVs certified under the provisions of this subpart:

(a) The requirements in § 86.096–35 and subsequent model year provisions do not apply to this section.

(b) The requirements in Chapter 7 of the California Regulatory Requirements Applicable to the National Low Emission Vehicle Program (October, 1996) shall apply. These requirements are incorporated by reference (see § 86.1).

[62 FR 31242, June 6, 1997. Redesignated at 63 FR 987, Jan. 7, 1998]

§§ 86.1736–99—86.1769–99 [Reserved]

§ 86.1770–99 All-Electric Range Test requirements.

(a) ZEVs and Type A and Type B hybrid electric vehicles shall be subject to the All-Electric Range Test specified below for the purpose of determining the energy efficiency and operating range of a ZEV or of a hybrid electric vehicle operating without the use of its auxiliary power unit. For hybrid electric vehicles, the manufacturer may elect to conduct the All-Electric Range Test prior to vehicle preconditioning in the exhaust and evaporative emission test sequence specified in subpart B of this part.

(1) *Cold soak*. The vehicle shall be stored at an ambient temperature not less than 68 °F (20 °C) and not more than 86 °F (30 °C) for 12 to 36 hours. During this time, the vehicle's battery shall be charged to a full state-of-charge.

(2) *Driving schedule*—(i) *Determination of All-Electric Range—Highway*. At the end of the cold soak period, the vehicle shall be placed, either driven or pushed, onto a dynamometer and operated through an Urban Dynamometer Driving Schedule, found in 40 CFR part 86, Appendix I, until the vehicle is no longer able to maintain within 5 miles per hour of the speed requirements or within 2 seconds of the time requirements of the driving schedule. For hybrid electric vehicles, this determination shall be performed without the use of the auxiliary power unit.

(ii) *Determination of All-Electric Range—Urban*. At the end of the cold soak period, the vehicle shall be placed, either driven or pushed, onto a dynamometer and operated through a Highway Fuel Economy Driving Schedule, found in 40 CFR part 600, Appendix I, until the vehicle is no longer able to maintain within 5 miles per hour of the speed requirements or within 2 seconds of the time requirements of the driving schedule. For hybrid electric vehicles, this determination shall be performed without the use of the auxiliary power unit.

(3) *Recording requirements*. Once the vehicle is no longer able to maintain the speed and time requirements specified in paragraph (a)(2) of this section, or once the auxiliary power unit turns on, in the case of a hybrid electric vehicle, the accumulated mileage and energy usage of the vehicle from the point where electricity is introduced from the electrical outlet shall be recorded, and the vehicle shall be brought to an immediate stop, thereby concluding the All-Electric Range Test.

(4) *Regenerative braking*. Regenerative braking systems may be utilized during

the range test. The braking level, if adjustable, shall be set according to the manufacturer's specifications prior to the commencement of the test. The driving schedule speed and time tolerances specified in paragraph (a)(2) of this section shall not be exceeded due to the operation of the regenerative braking system.

(b) [Reserved]

[62 FR 31242, June 6, 1997. Redesignated and amended at 63 FR 987, Jan. 7, 1998]

§ 86.1771–99 Fuel specifications.

(a) The provisions of § 86.113 apply to this subpart, with the following exceptions and additions.

(1) For light-duty vehicles and light light-duty trucks, gasoline having the specifications listed below may be used in exhaust emission testing as an option to the specifications in § 86.113(a)(1). If a manufacturer elects to utilize this option, exhaust emission testing shall be conducted by the manufacturer with gasoline having the specifications listed in the table in this paragraph (a)(1), and the Administrator shall conduct exhaust emission testing with gasoline having the specifications listed in the table in this paragraph (a)(1). Specifications for non-gasoline fuels and all fuel property test methods are contained in Chapter 4 of the California Regulatory Requirements Applicable to the National Low Emission Vehicle Program (October, 1996). These requirements are incorporated by reference (see § 86.1). The table follows:

Fuel property	Limit
Octane, (R+M)/2 (min)	91.
Sensitivity (min)	7.5.
Lead, g/gal (max) (No lead added).	0–0.01
Distillation Range, °F	
10 pct. point,	130–150.
50 pct. point,	200–210.
90 pct. point,	290–300.
EP, maximum	390.
Residue, vol % (max)	2.0.
Sulfur, ppm by wt.	30–40.
Phosphorous, g/gal (max)	0.005.
RVP, psi	6.7–7.0.
Olefins, vol %	4.0–6.0.
Total Aromatic Hydrocarbons (vol %).	22–25.
Benzene, vol %	0.8–1.0.
Multi-Substituted Alkyl Aromatic Hydrocarbons, vol %.	12–14.
MTBE, vol %	10.8–11.2.
Additives	See Chapter 4 of the California Regulatory Requirements Applicable to the National Low Emission Vehicle Program (October, 1996). These procedures are incorporated by reference (see § 86.1).
Copper Corrosion	No. 1.
Gum, Washed, mg/100 ml (max).	3.0.
Oxidation Stability, minutes (min).	1,000.
Specific Gravity	No limit; report to purchaser required.
Heat of Combustion	No limit; report to purchaser required.
Carbon, wt %	No limit; report to purchaser required.
Hydrogen, wt %	No limit; report to purchaser required.

(2) [Reserved]

(b) [Reserved]

[62 FR 31242, June 6, 1997. Redesignated at 63 FR 987, Jan. 7, 1998]

§ 86.1772–99 Road load power, test weight, and inertia weight class determination.

(a) The provisions of § 86.129 apply to this subpart.

(b) The following requirements shall also apply to this subpart:

(1) For electric and hybrid electric vehicle lines where it is expected that more than 33 percent of a vehicle line will be equipped with air conditioning, per § 86.096–24(g)(2) or § 86.1832–01(a) as applicable, that derives power from the battery pack, the road load shall be increased by the incremental horsepower required to operate the air conditioning unit. The incremental increase shall be determined by recording the difference in energy required for a hybrid electric vehicle under all-electric power to complete the running loss test fuel tank temperature profile test sequence without air conditioning and the same vehicle tested over the running loss test fuel tank temperature profile test sequence with the air conditioning set to the ''NORMAL'' air conditioning mode and adjusted to the minimum discharge air temperature and high fan speed over the time period needed to perform the test sequence, and converting this value into units of horsepower. Vehicles equipped with automatic temperature controlled air conditioning systems shall be operated

in ''AUTOMATIC'' temperature and fan modes with the system set at 72 deg. F. The running loss test fuel tank temperature profile test sequence is found in § 86.129(d).

(2) [Reserved]

[62 FR 31242, June 6, 1997. Redesignated at 63 FR 987, Jan. 7, 1998, as amended at 64 FR 23924, May 4, 1999]

§ 86.1773–99 Test sequence; general requirements.

(a) The provisions of § 86.130 apply to this subpart.

(b) The following additional requirements shall also apply to this subpart:

(1) For purposes of determining conformity with 50 °F test requirements, the procedures set forth in paragraph (c) of this section shall apply. For all hybrid electric vehicles and all 1995 and subsequent model-year vehicles certifying to running loss and useful life evaporative emission standards, the test sequence specified in subpart B of this part shall apply.

(2) [Reserved]

(c)(1) Following a 12 to 36 hour cold soak at a nominal temperature of 50 °F, emissions of CO and NO_X measured on the Federal Test Procedure (subpart B of this part), conducted at a nominal test temperature of 50 °F, shall not exceed the standards for vehicles of the same emission category and vehicle type subject to a cold soak and emission test at 68 to 86 °F. For all TLEVs, emissions of NMOG and formaldehyde at 50 °F shall not exceed the 50,000 mile certification standard multiplied by a factor of 2.0. For all LEVs, emissions of NMOG and formaldehyde at 50 °F shall not exceed the 50,000 mile certification standard multiplied by a factor of 2.0. For all ULEVs, emissions of NMOG and formaldehyde at 50 °F shall not exceed the 50,000 mile certification standard multiplied by a factor of 2.0. Emissions of NMOG shall be multiplied by a reactivity adjustment factor, if any, prior to comparing with the 50,000 certification standard multiplied by the specified factor. The test vehicles shall not be subject to a diurnal heat build prior to the cold start exhaust test or evaporative emission testing.

(i) For the 50 °F emission test, the nominal preconditioning, soak, and test temperatures shall be maintained within 3 °F of the nominal temperature on an average basis and within 5 °F of the nominal temperature on a continuous basis. The temperature shall be sampled at least once every 15 seconds during the preconditioning and test periods and at least once each 5 minutes during the soak period. A continuous strip chart recording of the temperature with these minimum time resolutions is an acceptable alternative to employing a data acquisition system.

(ii) The test site temperature shall be measured at the inlet of the vehicle cooling fan used for testing.

(iii) The test vehicle may be fueled before the preconditioning procedure in a fueling area maintained within a temperature range of 68 to 86 °F. The preconditioning shall be conducted at a nominal temperature of 50 °F. The requirement to saturate the evaporative control canister(s) shall not apply.

(iv) If a soak area remote from the test site is used, the vehicle may pass through an area maintained within a temperature range of 68 to 86 °F during a time interval not to exceed 10 minutes. In such cases, the vehicle shall be restabilized to 50 °F by soaking the vehicle in the nominal 50 °F test area for six times as long as the exposure time to the higher temperature area, prior to starting the emission test.

(v) The vehicle shall be approximately level during all phases of the test sequence to prevent abnormal fuel distribution.

(2) Manufacturers shall demonstrate compliance with this requirement each year by testing at least three LDV or LDT emission data and/or engineering development vehicles (with at least 4000 miles) which are representative of the array of technologies available in that model year. Only TLEVs, LEVs, and ULEVs are to be considered for testing at 50 °F. It is not necessary to apply deterioration factors (DFs) to the 50 °F test results to comply with this requirement. Testing at 50 °F shall not be required for fuel-flexible and dual-fuel vehicles when operating on gasoline. Natural gas, hybrid electric and diesel-fueled vehicles shall also be exempt from 50 °F testing.

(3) The following schedule outlines the parameters to be considered for vehicle selection:

(i) Fuel control system (e.g., multiport fuel injection, throttle body electronic fuel injection, sequential multiport electronic fuel injection, etc.);

(ii) Catalyst system (e.g., electrically heated catalyst, close-coupled catalyst, underfloor catalyst, etc.);

(iii) Control system type (e.g., mass-air flow, speed density, etc.);

(iv) Vehicle category (e.g., TLEV, LEV, ULEV);

(v) Fuel type (e.g., gasoline, methanol, etc.).

(4) The same engine family shall not be selected in the succeeding two years unless the manufacturer produces fewer than three engine families. If the manufacturer produces more than three TLEV, LEV, or ULEV engine families per model year, the Administrator may request 50 °F testing of specific engine families. If the manufacturer provides a list of the TLEV, LEV, and ULEV engine families that it will certify for a model year and provides a description of the technologies used on each engine family (including the vehicle selection parameters information in paragraphs (c)(3) (i) through (v) of this section), the Administrator shall select the engine families subject to 50 °F testing within a 30 day period after receiving such a list and description. The Administrator may revise the engine families selected after the 30 day period if the information provided by the manufacturer does not accurately reflect the engine families actually certified by the manufacturer.

(5) For the purposes of this section, the Administrator will accept vehicles selected and tested in accordance with the 50 °F testing procedures specified by the California Air Resources Board.

(d) A manufacturer has the option of simulating air conditioning operation during testing at other ambient test conditions provided it can demonstrate that the vehicle tailpipe exhaust emissions are representative of the emissions that would result from the SC03 cycle test procedure and the ambient conditions of paragraph 86.161–00. The Administrator has approved two optional air conditioning test simulation procedures, AC1 and AC2, for the 2001 to 2003 model years only. If a manufacturer desires to conduct an alternative SC03 test simulation other than AC1 and AC2, or the AC1 and AC2 simulations for the 2004 and subsequent model years, the simulation test procedure must be approved in advance by the Administrator.

[62 FR 31242, June 6, 1997. Redesignated and amended at 63 FR 987, Jan. 7, 1998]

§ 86.1774–99 Vehicle preconditioning.

The provisions of § 86.132 apply to this subpart, with the following exceptions and additions:

(a) The provisions of § 86.132 (a) through (e) apply to this subpart, with the following additional requirements:

(1) The UDDS performed prior to a non-regeneration emission test shall not contain a regeneration (diesel light-duty vehicles and light-duty trucks equipped with periodically regenerating trap oxidizer systems only). A gasoline fueled test vehicle may not be used to set dynamometer horsepower.

(2) [Reserved]

(b) [Reserved]

[62 FR 31242, June 6, 1997. Redesignated at 63 FR 987, Jan. 7, 1998]

§ 86.1775–99 Exhaust sample analysis.

The following requirements shall apply to TLEVs, LEVs, ULEVs, and ZEVs certified under the provisions of this subpart:

(a) The requirements in § 86.140;

(b) The requirements in Chapter 5 of the California Regulatory Requirements Applicable to the National Low Emission Vehicle Program (October, 1996). These requirements are incorporated by reference (see § 86.1).

[62 FR 31242, June 6, 1997. Redesignated at 63 FR 987, Jan. 7, 1998]

§ 86.1776–99 Records required.

(a) The provisions of § 86.142 apply to this subpart.

(b) In addition to the provisions of § 86.142, the following provisions apply to this subpart:

(1) The manufacturer shall record in the durability-data vehicle logbook, the number of regenerations that occur during the 50,000 mile durability test of each diesel light-duty vehicle and

light-duty truck equipped with a periodically regenerating trap oxidizer system. The manufacturer shall include, for each regeneration: the date and time of the start of regeneration, the duration of the regeneration, and the accumulated mileage at the start and the end of regeneration. The number of regenerations will be used in the calculation of the deterioration factor or other durability demonstration under § 86.1823–01 and subsequent model year provisions.

(2) The requirements in Chapter 5 of the California Regulatory Requirements Applicable to the National Low Emission Vehicle Program (October, 1996). These requirements are incorporated by reference (see § 86.1).

(3) For additional record requirements see §§ 86.1770, 86.1771, 86.1772, 86.1773, 86.1774, and 86.1777.

[62 FR 31242, June 6, 1997. Redesignated at 63 FR 987, Jan. 7, 1998, as amended at 64 FR 23925, May 4, 1999]

EFFECTIVE DATE NOTE: At 62 FR 31242, June 6, 1997, subpart R was added, effective Aug. 5, 1997. Section 86.1776–99 contains information collection and recordkeeping requirements and will not become effective until approval has been given by the Office of Management and Budget.

§ 86.1777–99 Calculations; exhaust emissions.

The provisions of § 86.144 apply to this subpart, with the following exceptions and additions:

(a) The provisions of § 86.144(b) apply to this subpart, with the following additional requirement:

(1) Organic material non-methane hydrocarbon equivalent mass for ethanol vehicles:

$$OMNMHCE_{mass}=NMHC_{mass} + (13.8756/32.042) \times (CH_3OH)_{mass} + (13.8756/46.064) \times (CH_3CH_2OH)_{mass} + (13.8756/30.0262) \times (HCHO)_{mass} + (13.8756/44.048) \times (CH_3CHO)_{mass}$$

(2) [Reserved]

(b) The requirements in Chapter 5 of the California Regulatory Requirements Applicable to the National Low Emission Vehicle Program (October, 1996) apply to this subpart. These requirements are incorporated by reference (see § 86.1).

(c) The provisions in appendix XV of this part and appendix XVI of this part apply to this subpart.

(d) *Reactivity adjustment factors.* (1) For the purpose of complying with the NMOG exhaust emission standards in §§ 86.1708 and 86.1709, the mass of NMOG emissions from a vehicle certified to operate on a fuel other than conventional gasoline, including fuel-flexible and dual-fuel vehicles when operated on a fuel other than conventional gasoline, shall be multiplied by the reactivity adjustment factor applicable to the vehicle emission control technology category and fuel. The product of the NMOG mass emission value and the reactivity adjustment factor shall be compared to the NMOG exhaust emission standards to determine compliance with the standards. In addition to the above requirements, vehicles operating on natural gas shall add to the product of the NMOG mass emission value and the reactivity adjustment factor, the product of the methane mass emission value and the methane reactivity adjustment factor. This result shall be compared to the NMOG exhaust emission standards to determine compliance with the standards for natural gas-fueled vehicles.

(2) The following reactivity adjustment factors have been established pursuant to the criteria in appendix XVII of this part:

(i) Light-duty vehicles and light-duty trucks:

Vehicle emission control technology category	Fuel	Reactivity adjustment factor
TLEVs	85% methanol, 15% gasoline blends	0.41
LEVs and ULEVs through model year 2000	85% methanol, 15% gasoline blends	0.41
TLEVs through model year 2000	Gasoline meeting the specifications of § 86.1771(a)(1)	0.98
LEVs and ULEVs through model year 2000	Gasoline meeting the specifications of § 86.1771(a)(1)	0.94
TLEVs through model year 2000	Fuel meeting the specifications for liquefied petroleum gas specified in Chapter 4 of the California Regulatory Requirements Applicable to the National Low Emission Vehicle Program (October, 1996).	1.00

Vehicle emission control technology category	Fuel	Reactivity adjustment factor
LEVs and ULEVs through model year 2000	Fuel meeting the specifications for liquefied petroleum gas specified in Chapter 4 of the California Regulatory Requirements Applicable to the National Low Emission Vehicle Program (October, 1996).	0.50
TLEVs through model year 2000	Fuel meeting the specifications for natural gas specified in Chapter 4 of the California Regulatory Requirements Applicable to the National Low Emission Vehicle Program (October, 1996).	1.00
LEVs and ULEVs through model year 2000	Fuel meeting the specifications for natural gas specified in Chapter 4 of the California Regulatory Requirements Applicable to the National Low Emission Vehicle Program (October, 1996).	0.43

(ii) Natural gas light-duty vehicles and light-duty trucks:

Vehicle emission control technology category	Methane reactivity adjustment factor
TLEVs	0.0043
LEVs and ULEVs	0.0047

(3) The Administrator may establish new reactivity adjustment factors pursuant to appendix XVII of this part in addition to those listed in paragraph (d)(2) of this section. The Administrator shall notify manufacturers in writing of the new reactivity adjustment factors within 30 days of their establishment.

(4) The Administrator may revise any reactivity adjustment factor listed in paragraph (d)(2) of this section or established by the Administrator pursuant to appendix XVII of this part if he or she determines that the revised reactivity adjustment factor is more representative of the ozone-forming potential of vehicle NMOG emissions based on the best available scientific knowledge and sound engineering judgment. The Administrator shall notify manufacturers in writing of any such reactivity adjustment factor at least 3 years prior to January 1 of the calendar year which has the same numerical designation as the model year for which the revised reactivity adjustment factor first becomes effective. However, manufacturers may use the revised reactivity adjustment factor in certifying any new engine family whose certification application is submitted following such notification, if they so choose. Manufacturers may also continue to use the original reactivity adjustment factor for any existing engine family previously certified with that reactivity adjustment factor until a new durability-data vehicle is tested for that engine family.

(5) Manufacturers may request the use of a unique reactivity adjustment factor for a specific vehicle emission control technology category and fuel. The Administrator shall approve such requests in accordance with the conditions and procedures of appendix XVII of this part. For the purpose of calculating the reactivity adjustment factor as specified in appendix XVII of this part, the ''g ozone potential per g NMOG'' value for the vehicle emission control technology category and fuel system for which the manufacturer is requesting the use of a unique reactivity adjustment factor shall be divided by the ''g ozone potential per g NMOG'' value for a conventional gasoline-fueled vehicle established for the vehicle emission control technology category. The following ''g ozone potential per g NMOG'' values for conventional gasoline-fueled vehicle emission control technology categories have been established:

(i) Light-duty vehicles and light-duty trucks:

Vehicle emission control technology category	''g ozone potential per g NMOG'' for conventional gasoline
All TLEVs	3.42
All 1993 and subsequent model-year LEVs and ULEVs	3.13

(ii) [Reserved]

[62 FR 31242, June 6, 1997. Redesignated at 63 FR 987, Jan. 7, 1998]

§ 86.1778–99 Calculations; particulate emissions.

The provisions of § 86.145 and appendix XVI of this part apply to this subpart.

[62 FR 31242, June 6, 1997. Redesignated at 63 FR 987, Jan. 7, 1998]

§ 86.1779–99 General enforcement provisions.

(a) The provisions of sections 203–208 of the Clean Air Act, as amended, (42 U.S.C. 7522–7525, 7541–7542) apply to all motor vehicles manufactured by a covered manufacturer under this program, and to all covered manufacturers and all persons with respect to such vehicles.

(b) Violation of the requirements of this subpart shall subject a person to the jurisdiction and penalty provisions of sections 204–205 of the Clean Air Act (42 U.S.C. 7522–7523).

(c) EPA may not issue a certificate of conformity to a covered manufacturer, as defined in § 86.1702, except based on compliance with the standards and requirements in this part 86 and 40 CFR part 85.

[62 FR 31242, June 6, 1997. Redesignated at 63 FR 987, Jan. 7, 1998]

§ 86.1780–99 Prohibited acts.

(a) The following acts and the causing thereof are prohibited:

(1) In the case of a covered manufacturer, as defined by § 86.1702, of new motor vehicles or new motor vehicle engines for distribution in commerce, the sale, or the offering for sale, or the introduction, or delivery for introduction, into commerce, or (in the case of any person, except as provided by regulation of the Administrator), the importation into the United States of any new motor vehicle or new motor vehicle engine subject to this subpart, unless such vehicle or engine is covered by a certificate of conformity issued (and in effect) under regulations found in this subpart (except as provided in sec. 203(b) of the Clean Air Act (42 U.S.C. 7522(b)) or regulations promulgated thereunder).

(2)(i) For any person to fail or refuse to permit access to or copying of records or to fail to make reports or provide information required under sec. 208 of the Clean Air Act (42 U.S.C. 7542) with regard to covered vehicles.

(ii) For a person to fail or refuse to permit entry, testing, or inspection authorized under sec. 206(c) (42 U.S.C. 7525(c)) or sec. 208 of the Clean Air Act (42 U.S.C. 7542) with regard to covered vehicles.

(iii) For a person to fail or refuse to perform tests, or to have tests performed as required under sec. 208 of the Clean Air Act (42 U.S.C. 7542) with regard to covered vehicles.

(iv) For a person to fail to establish or maintain records as required under §§ 86.1723 and 86.1776 with regard to covered vehicles.

(v) For any manufacturer to fail to make information available as provided by regulation under sec. 202(m)(5) of the Clean Air Act (42 U.S.C. 7521(m)(5)) with regard to covered vehicles.

(3)(i) For any person to remove or render inoperative any device or element of design installed on or in a covered vehicle or engine in compliance with regulations under this subpart prior to its sale and delivery to the ultimate purchaser, or for any person knowingly to remove or render inoperative any such device or element of design after such sale and delivery to the ultimate purchaser.

(ii) For any person to manufacture, sell or offer to sell, or install, any part or component intended for use with, or as part of, any covered vehicle or engine, where a principal effect of the part or component is to bypass, defeat, or render inoperative any device or element of design installed on or in a covered vehicle or engine in compliance with regulations issued under this subpart, and where the person knows or should know that the part or component is being offered for sale or installed for this use or put to such use.

(4) For any manufacturer of a covered vehicle or engine subject to standards prescribed under this subpart:

(i) To sell, offer for sale, introduce or deliver into commerce, or lease any

such vehicle or engine unless the manufacturer has complied with the requirements of sec. 207 (a) and (b) of the Clean Air Act (42 U.S.C. 7541 (a), (b)) with respect to such vehicle or engine, and unless a label or tag is affixed to such vehicle or engine in accordance with sec. 207(c)(3) of the Clean Air Act (42 U.S.C. 7541(c)(3)).

(ii) To fail or refuse to comply with the requirements of sec. 207 (c) or (e) of the Clean Air Act (42 U.S.C. 7541 (c) or (e)).

(iii) Except as provided in sec. 207(c)(3) of the Clean Air Act (42 U.S.C. 7541(c)(3)), to provide directly or indirectly in any communication to the ultimate purchaser or any subsequent purchaser that the coverage of a warranty under the Clean Air Act is conditioned upon use of any part, component, or system manufactured by the manufacturer or a person acting for the manufacturer or under its control, or conditioned upon service performed by such persons.

(iv) To fail or refuse to comply with the terms and conditions of the warranty under sec. 207 (a) or (b) of the Clean Air Act (42 U.S.C. 7541 (a) or (b)).

(b) For the purposes of enforcement of this subpart, the following apply:

(1) No action with respect to any element of design referred to in paragraph (a)(3) of this section (including any adjustment or alteration of such element) shall be treated as a prohibited act under paragraph (a)(3) of this section if such action is in accordance with sec. 215 of the Clean Air Act (42 U.S.C. 7549);

(2) Nothing in paragraph (a)(3) of this section is to be construed to require the use of manufacturer parts in maintaining or repairing a covered vehicle or engine. For the purposes of the preceding sentence, the term ''manufacturer parts'' means, with respect to a motor vehicle engine, parts produced or sold by the manufacturer of the motor vehicle or motor vehicle engine;

(3) Actions for the purpose of repair or replacement of a device or element of design or any other item are not considered prohibited acts under paragraph (a)(3) of this section if the action is a necessary and temporary procedure, the device or element is replaced upon completion of the procedure, and the action results in the proper functioning of the device or element of design;

(4) Actions for the purpose of a conversion of a motor vehicle or motor vehicle engine for use of a clean alternative fuel (as defined in title II of the Clean Air Act) are not considered prohibited acts under paragraph (a) of this section if:

(i) The vehicle complies with the applicable standard when operating on the alternative fuel; and

(ii) In the case of engines converted to dual fuel or flexible use, the device or element is replaced upon completion of the conversion procedure, and the action results in proper functioning of the device or element when the motor vehicle operates on conventional fuel.

[62 FR 31242, June 6, 1997. Redesignated at 63 FR 987, Jan. 7, 1998]

Subpart S—General Compliance Provisions for Control of Air Pollution From New and In-Use Light-Duty Vehicles, Light-Duty Trucks, and Complete Otto-Cycle Heavy-Duty Vehicles

SOURCE: 64 FR 23925, May 4, 1999, unless otherwise noted.

§ 86.1801–01 Applicability.

(a) *Applicability*. Except as otherwise indicated, the provisions of this subpart apply to new 2001 and later model year Otto-cycle and diesel cycle light-duty vehicles, light-duty trucks, medium-duty passenger vehicles, and 2005 and later model year Otto-cycle complete heavy-duty vehicles (2003 or 2004 model year for manufacturers choosing Otto-cycle HDE option 1 or 2, respectively, in § 86.005–1(c)) including multi-fueled, alternative fueled, hybrid electric, and zero emission vehicles. These provisions also apply to 2001 model year and later new incomplete light-duty trucks below 8,500 Gross Vehicle Weight Rating, and to 2001 and later model year Otto-cycle complete heavy-duty vehicles participating in the provisions of the averaging, trading, and banking program under the provisions of § 86.1817–05(n). In cases where a provision applies only to a certain vehicle group based on its model year, vehicle

class, motor fuel, engine type, or other distinguishing characteristics, the limited applicability is cited in the appropriate section of this subpart.

(b) *Aftermarket conversions.* The provisions of this subpart apply to aftermarket conversions of all model year Otto-cycle and diesel-cycle light-duty vehicles, light-duty trucks, and complete Otto-cycle heavy-duty vehicles as defined in 40 CFR 85.502.

(c) *Optional applicability.* (1) A manufacturer may request to certify any Otto-cycle heavy-duty vehicle of 14,000 pounds Gross Vehicle Weight Rating or less in accordance with the light-duty truck provisions through the 2004 model year (2002 model year for manufacturers choosing Otto-cycle HDE option 1 in § 86.005–1(c) or 2003 model year for manufacturers choosing Otto-cycle HDE option 2 in § 86.005–1(c)). Heavy-duty engine or heavy-duty vehicle provisions of subpart A of this part do not apply to such a vehicle. A 2004 model year heavy-duty vehicle optionally certified as a light-duty truck under this provision must comply with all provisions applicable to MDPVs including exhaust and evaporative emission standards, test procedures, on-board diagnostics, refueling standards, phase-in requirements and fleet average standards under 40 CFR part 85 and this part.

(2) Beginning with the 2001 model year, a manufacturer may request to certify any incomplete Otto-cycle heavy-duty vehicle of 14,000 pounds Gross Vehicle Weight Rating or less in accordance with the provisions for complete heavy-duty vehicles. Heavy-duty engine or heavy-duty vehicle provisions of subpart A of this part do not apply to such a vehicle.

(3) A manufacturer may optionally use the provisions of this subpart in lieu of the provisions of subpart A beginning with the 2000 model year for light-duty vehicles and light-duty trucks. Manufacturers choosing this option must comply with all provisions of this subpart. Manufacturers may elect this provision for either all or a portion of their product line.

(4) Upon preapproval by the Administrator, a manufacturer may optionally certify an aftermarket conversion of a complete heavy-duty vehicle greater than 10,000 pounds Gross Vehicle Weight Rating and of 14,000 pounds Gross Vehicle Weight Rating or less under the heavy-duty engine or heavy-duty vehicle provisions of subpart A of this part. Such preapproval will be granted only upon demonstration that chassis-based certification would be infeasible or unreasonable for the manufacturer to perform.

(5) A manufacturer may optionally certify an aftermarket conversion of a complete heavy-duty vehicle greater than 10,000 pounds Gross Vehicle Weight Rating and of 14,000 pounds Gross Vehicle Weight Rating or less under the heavy-duty engine or heavy-duty vehicle provisions of subpart A of this part without advance approval from the Administrator if the vehicle was originally certified to the heavy-duty engine or heavy-duty vehicle provisions of subpart A of this part.

(d) *Small volume manufacturers.* Special certification procedures are available for any manufacturer whose projected or actual combined sales in all states and territories of the United States of light-duty vehicles, light-duty trucks, heavy-duty vehicles, and heavy-duty engines in its product line (including all vehicles and engines imported under the provisions of 40 CFR 85.1505 and 85.1509) are fewer than 15,000 units for the model year in which the manufacturer seeks certification. The small volume manufacturer's light-duty vehicle and light-duty truck certification procedures and described in § 86.1838–01.

(e) *National Low Emission Vehicle Program for light-duty vehicles and light light-duty trucks.* A manufacturer may elect to certify 2001–2003 model year light-duty vehicles and light light-duty trucks (LDV/LLDTs) to the provisions of the National Low Emission Vehicle Program contained in Subpart R of this part. Subpart R of this part is applicable only to those covered manufacturers as defined under the provisions of subpart R of this part. All provisions of this subpart S are applicable to vehicles certified pursuant to subpart R of this part, except as specifically noted in subpart R of this part.

(f) *''Early'' Tier 2 LDVs, LDTs and MDPVs.* Any LDV/LLDT which is certified to Tier 2 FTP exhaust standards

prior to the 2004 model year, or any HLDT or MDPV which is certified to the Tier 2 FTP exhaust standards prior to the 2008 model year, to utilize alternate phase-in schedules and/or for purposes of generating and banking Tier 2 NO_X credits, must comply with all the exhaust emission requirements applicable to Tier 2 LDV/LLDTs or HLDT/MDPVs, as applicable, under this subpart.

(g) *Interim non-Tier 2 LDVs, LDTs and MDPVs.* Model year 2004–2008 LDVs, LDTs and MDPVs, that do not comply with the Tier 2 FTP exhaust emission requirements (interim non-Tier 2 LDV/LLDTs and interim non-Tier 2 HLDT/MDPVs) as permitted under the phase-in requirements of § 86.1811–04(k) must comply with all applicable interim non-Tier 2 exhaust emission requirements contained in this subpart, including FTP exhaust emission requirements for all interim non-Tier 2 LDV/LLDTs and HLDT/MDPVs found at § 86.1811–04(l). Additional emission bins and separate fleet average NO_X emission standards and other provisions are provided for interim non-Tier 2 LDV/LLDTs, and interim non-Tier 2 HLDT/MDPVs.

(h) *Applicability of provisions of this subpart to LDVs, LDTs, MDPVs and HDVs.* Numerous sections in this subpart provide requirements or procedures applicable to a ''vehicle'' or ''vehicles.'' Unless otherwise specified or otherwise determined by the Administrator, the term ''vehicle'' or ''vehicles'' in those provisions apply equally to LDVs, LDTs, MDPVs and HDVs.

[64 FR 23925, May 4, 1999, as amended at 65 FR 6851, Feb. 10, 2000; 65 FR 59963, Oct. 6, 2000; 67 FR 72825, Dec. 6, 2002]

§ 86.1802–01 Section numbering; construction.

(a) *Section numbering.* The model year of initial applicability is indicated by the section number. The two digits following the hyphen designate the first model year for which a section is applicable. The section continues to apply to subsequent model years unless a later model year section is adopted. Example: Section 86.18xx–01 applies to the 2001 and subsequent model years. If a § 86.18xx–03 is promulgated it would apply beginning with the 2003 model year; § 86.18xx–01 would apply to model years 2001 through 2002.

(b) A section reference without a model year suffix refers to the section applicable for the appropriate model year.

§ 86.1803–01 Definitions.

The following definitions apply to this subpart:

505 Cycle means the test cycle that consists of the first 505 seconds (seconds 1 to 505) of the EPA Urban Dynamometer Driving Schedule, described in § 86.115–00 and listed in Appendix I, paragraph (a), of this part.

866 Cycle means the test cycle that consists of the last 866 seconds (seconds 506 to 1372) of the EPA Urban Dynamometer Driving Schedule, described in § 86.115–00 and listed in Appendix I, paragraph (a), of this part.

Abnormally treated vehicle means any diesel light-duty vehicle or diesel light-duty truck that is operated for less than five miles in a 30 day period immediately prior to conducting a particulate emissions test.

AC1 means a test procedure as described in § 86.162–00 which simulates testing with air conditioning operating in an environmental test cell by adding the air conditioning compressor load to the normal dynamometer forces.

AC2 means a test procedure as described in § 86.162–00 which simulates testing with air conditioning operating in an environmental test cell by adding a heat load to the passenger compartment.

Accuracy means the difference between a measurement and true value.

Act means Part A of Title II of the Clean Air Act as amended, 42 U.S.C., 7401, et seq.

Adjusted Loaded Vehicle Weight means the numerical average of vehicle curb weight and gross vehicle weight rating (GVWR).

Administrator means the Administrator of the Environmental Protection Agency or his/her authorized representative.

Alternative fuels means any fuel other than gasoline and diesel fuels, such as methanol, ethanol, and gaseous fuels.

Approach angle means the smallest angle in a plan side view of an automobile, formed by the level surface on

which the automobile is standing and a line tangent to the front tire static loaded radius arc and touching the underside of the automobile forward of the front tire.

As-received condition means the condition of an in-use vehicle procured for emission testing required by this subpart upon which no adjustments, maintenance, or component replacement has occurred subsequent to the vehicle's last routine operation by the vehicle's owner, lessee, or operator prior to procurement.

Auxiliary Emission Control Device (AECD) means any element of design which senses temperature, vehicle speed, engine RPM, transmission gear, manifold vacuum, or any other parameter for the purpose of activating, modulating, delaying, or deactivating the operation of any part of the emission control system.

Averaging for chassis-bases heavy-duty vehicles means the exchange of NO_X emission credits among test groups within a given manufacturer's product line.

Averaging set means a subcategory of complete heavy-duty vehicles within which test groups can average and trade emission credits with one another.

Axle clearance means the vertical distance from the level surface on which an automobile is standing to the lowest point on the axle differential of the automobile.

Banking means the retention of NO_X emission credits for complete heavy-duty vehicles by the manufacturer generating the emission credits, for use in future model year certification programs as permitted by regulation.

Basic engine means a unique combination of manufacturer, engine displacement, number of cylinders, fuel system (as distinguished by number of carburetor barrels or use of fuel injection), catalyst usage, and other engine and emission control system characteristics specified by the Administrator.

Basic vehicle frontal area means the area enclosed by the geometric projection of the basic vehicle along the longitudinal axis, which includes tires but excludes mirrors and air deflectors, onto a plane perpendicular to the longitudinal axis of the vehicle.

Bi-directional control means the capability of a diagnostic tool to send messages on the data bus that temporarily overrides the module's control over a sensor or actuator and gives control to the diagnostic tool operator. Bi-directional controls do not create permanent changes to engine or component calibrations.

Bin or *emission bin* means a set of emission standards applicable to exhaust pollutants measured on the Federal Test Procedure (FTP). A bin is equivalent to a horizontal row of FTP standards in Tables S04–1 and S04–2 shown in this subpart. Manufacturers are generally free to choose the bin of standards that will apply to a certain test group of vehicles, provided that on a sales weighted average of those bins, all of their vehicles meet a specified fleet average standard for a particular pollutant.

Body style means a level of commonality in vehicle construction as defined by number of doors and roof treatment (e.g., sedan, convertible, fastback, hatchback).

Body type means a name denoting a group of vehicles that are either in the same car line or in different car lines provided the only reason the vehicles qualify to be considered in different car lines is that they are produced by a separate division of a single manufacturer.

Breakover angle means the supplement of the largest angle, in the plan side view of an automobile, that can be formed by two lines tangent to the front and rear static loaded radii arcs and intersecting at a point on the underside of the automobile.

Calibration means the set of specifications, including tolerances, unique to a particular design, version, or application of a component or components assembly capable of functionally describing its operation over its working range.

Calibration gas means a gas of known concentration which is used to establish the response curve of an analyzer.

CalLEV II or *California LEV II* refers to California's second phase of its low emission vehicle (LEV) program. This program was adopted at the hearing of the California Air Resources Board

held on November 5, 1998 and became effective on November 27, 1999.

Candidate in-use vehicle means an in-use vehicle which would be eligible to participate in the in-use verification program in accordance with § 86.1845–01.

Car line means a name denoting a group of vehicles within a make or car division which has a degree of commonality in construction (*e.g.*, body, chassis). Car line does not consider any level of decor or opulence and is not generally distinguished by characteristics as roofline, number of doors, seats, or windows except for station wagons or light-duty trucks. Station wagons, light-duty trucks, and complete heavy-duty vehicles are considered to be different car lines than passenger cars.

Certification Short Test (CST) means the test, for gasoline-fueled Otto-cycle light-duty vehicles and light-duty trucks, performed in accordance with the procedures contained in 40 CFR part 86, subpart O.

Complete heavy-duty vehicle means any Otto-cycle heavy-duty vehicle of 14,000 pounds Gross Vehicle Weight Rating or less that has the primary load carrying device or container attached at the time the vehicle leaves the control of the manufacturer of the engine.

Configuration means a subclassification within a test group which is based on engine code, inertia weight class, transmission type and gear ratios, final drive ratio, and other parameters which may be designated by the Administrator.

Conveniently available service facility and spare parts for small-volume manufacturers means that the vehicle manufacturer has a qualified service facility at or near the authorized point of sale or delivery of its vehicles and maintains an inventory of all emission-related spare parts or has made arrangements for the part manufacturers to supply the parts by expedited shipment (e.g., utilizing overnight express delivery service, UPS, etc.).

Crankcase emissions means airborne substances emitted to the atmosphere from any portion of the engine crankcase ventilation or lubrication systems.

Critical emission-related components are those components which are designed primarily for emission control, or whose failure may result in a significant increase in emissions accompanied by no significant impairment (or perhaps even an improvement) in performance, driveability, and/or fuel economy as determined by the Administrator.

Critical emission-related maintenance means that maintenance to be performed on critical emission-related components.

Curb weight means the actual or the manufacturer's estimated weight of the vehicle in operational status with all standard equipment, and weight of fuel at nominal tank capacity, and the weight of optional equipment computed in accordance with § 86.1832–01; incomplete light-duty trucks shall have the curb weight specified by the manufacturer.

Curb-idle means, for manual transmission code motor vehicles, the engine speed with the transmission in neutral or with the clutch disengaged and with the air conditioning system, if present, turned off. For automatic transmission code motor vehicles, curb-idle means the engine speed with the automatic transmission in the park position (or neutral position if there is no park position), and with the air conditioning system, if present, turned off.

Data stream information means information (i.e., messages and parameters) originated within the vehicle by a module or intelligent sensors (i.e., a sensor that contains and is controlled by its own module) and transmitted between a network of modules and/or intelligent sensors connected in parallel with either one or two communication wires. The information is broadcast over the communication wires for use by other modules (e.g., chassis, transmission, etc.) to conduct normal vehicle operation or for use by diagnostic tools. Data stream information does not include engine calibration related information.

Dedicated vehicle means any motor vehicle engineered and designed to be operated using a single fuel. Flexible fuel vehicles and multi-fuel vehicles are not dedicated vehicles.

Defeat device means an auxiliary emission control device (AECD) that

reduces the effectiveness of the emission control system under conditions which may reasonably be expected to be encountered in normal vehicle operation and use, unless:

(1) Such conditions are substantially included in the Federal emission test procedure;

(2) The need for the AECD is justified in terms of protecting the vehicle against damage or accident; or

(3) The AECD does not go beyond the requirements of engine starting.

Departure angle means the smallest angle, in a plan side view of a motor vehicle, formed by the level surface on which the motor vehicle is standing and a line tangent to the rear tire static loaded radius arc and touching the underside of the motor vehicle rearward of the rear tire.

Diesel means a type of engine with operating characteristics significantly similar to the theoretical Diesel combustion cycle. The non-use of a throttle during normal operation is indicative of a diesel engine.

Dispensed fuel temperature means the temperature (deg. F or deg. C may be used) of the fuel being dispensed into the tank of the test vehicle during a refueling test.

Diurnal breathing losses means diurnal emissions.

Diurnal emissions means evaporative emissions resulting from the daily cycling of ambient temperatures.

Drive train configuration means a unique combination of engine code, transmission configuration, and axle ratio.

Dual fuel vehicle means any motor vehicle engineered and designed to be operated on two different fuels, but not on a mixture of the fuels.

Durability data vehicle means a vehicle used to generate durability data as required in this subpart.

Durability group means the basic classification unit of a manufacturer's product line used for the purpose of selecting a vehicle configuration to demonstrate durability and predict deterioration in accordance with § 86.1822–01.

Durability useful life means the highest useful life mileage out of the set of all useful life mileages that apply to a given vehicle. The durability useful life determines the duration of service accumulation on a durability data vehicle. The determination of durability useful life shall reflect any light-duty truck or complete heavy-duty vehicle alternative useful life periods approved by the Administrator under § 86.1805–01(c). The determination of durability useful life shall exclude any standard and related useful life mileage for which the manufacturer has obtained a waiver of emission data submission requirements under § 86.1829–01.

Element of design means any control system (i.e., computer software, electronic control system, emission control system, computer logic), and/or control system calibrations, and/or the results of systems interaction, and/ or hardware items on a motor vehicle or motor vehicle engine.

Emission control system is a unique group of emission control devices, auxiliary emission control devices, engine modifications and strategies, and other elements of design designated by the Administrator used to control exhaust emissions of a vehicle.

Emission credits mean the amount of emission reductions or exceedances, by a complete heavy-duty vehicle test group, below or above the emission standard, respectively. Emission credits below the standard are considered as ''positive credits,'' while emission credits above the standard are considered as ''negative credits.'' In addition, ''projected credits'' refer to emission credits based on the projected U.S. production volume of the test group. ''Reserved credits'' are emission credits generated within a model year waiting to be reported to EPA at the end of the model year. ''Actual credits'' refer to emission credits based on actual U.S. production volumes as contained in the end-of-year reports submitted to EPA. Some or all of these credits may be revoked if EPA review of the end of year reports or any subsequent audit actions uncover problems or errors.

Emission-related component means any component which can affect emissions.

Emission-related maintenance means that maintenance which does substantially affect emissions or which is likely to affect the emissions deterioration

of the vehicle during normal in-use operation, even if the maintenance is performed at some time other than that which is recommended.

Engine code means a unique combination within a test group of displacement, fuel injection (or carburetor) calibration, choke calibration, distributor calibration, auxiliary emission control devices, and other engine and emission control system components specified by the Administrator.

Engine warm-up cycle means sufficient vehicle operation such that the coolant temperature has risen by at least 40 deg. F from engine starting and reaches a minimum temperature of 160 deg. F.

Environmental test cell means a test cell capable of wind-speed, solar thermal load, ambient temperature, and humidity control or simulation which meets the requirements of § 86.161–00 for running emission tests with the air conditioning operating.

EPA Enforcement Officer means any officer or employee of the Environmental Protection Agency so designated in writing by the Administrator (or by his/her designee).

Equivalent test weight means the weight, within an inertia weight class, which is used in the dynamometer testing of a vehicle and which is based on its loaded vehicle weight or adjusted loaded vehicle weight in accordance with the provisions of this Part.

Evaporative emissions means hydrocarbons emitted into the atmosphere from a motor vehicle, other than exhaust and crankcase emissions.

Evaporative/refueling control system means a unique combination within an evaporative/refueling family of canister adsorptive material, purge system configuration, purge strategy, and other parameters determined by the Administrator to affect evaporative and refueling emission control system durability or deterioration factors.

Evaporative/refueling emission code means a unique combination, in an evaporative/refueling family-evaporative emission control system combination, of purge system calibrations, fuel tank and carburetor bowl vent calibrations and other fuel system and evaporative emission control system components and calibrations specified by the Administrator.

Evaporative/refueling family means the basic classification unit of a manufacturers' product line used for the purpose of evaporative and refueling emissions test fleet selection and determined in accordance with § 86.1821–01.

Evaporative/refueling vehicle configuration means a unique combination of basic engine, engine code, body type, and evaporative emission code.

Exhaust emissions means substances emitted to the atmosphere from any opening downstream from the exhaust port of a motor vehicle engine.

Exhaust gas recirculation valve means a device which directs a portion of the exhaust gas into the intake air stream for the purpose of controlling emissions.

Family emission limit (FEL) means an emission level declared by the manufacturer which serves in lieu of an emission standard for certification purposes in the averaging, trading and banking program. FELs must be expressed to the same number of decimal places as the applicable emission standard.

Federal Test Procedure, or FTP means the test procedure as described in § 86.130–00(a) through (d) and (f) which is designed to measure urban driving tail pipe exhaust emissions and evaporative emissions over the Urban Dynamometer Driving Schedule as described in Appendix I to this part.

Fixed liquid level gauge means a type of liquid level gauge used on liquefied petroleum gas-fueled vehicles which uses a relatively small positive shutoff valve and is designed to indicate when the liquid level in the fuel tank being filled reaches the proper fill level. The venting of fuel vapor and/or liquid fuel to the atmosphere during the refueling event is generally associated with the use of the fixed liquid level gauge.

Fleet average NO_X standard means, for light-duty vehicles, light-duty trucks and medium-duty passenger vehicles, a NO_X standard imposed over an individual manufacturer's total U.S. sales (or a fraction of total U.S. sales during phase-in years), as 'U.S. sales' is defined in this subpart, of a given model year. Manufacturers determine their compliance with such a standard by

averaging, on a sales weighted basis, the individual NO_X standards they choose for the fleet of light-duty vehicles, light-duty trucks and medium-duty passenger vehicles they sell of that model year.

Flexible fuel vehicle means any motor vehicle engineered and designed to be operated on a petroleum fuel, a methanol fuel, or any mixture of the two. Methanol-fueled vehicles that are only marginally functional when using gasoline (e.g., the engine has a drop in rated horsepower of more than 80 percent) are not flexible fuel vehicles.

Fuel system means the combination of fuel tank(s), fuel pump, fuel lines, and carburetor or fuel injection components, and includes all fuel system vents and fuel evaporative emission control system components.

Gaseous fuel means natural gas or liquefied petroleum gas.

Gross vehicle weight means the manufacturer's gross weight rating for the individual vehicle.

Gross vehicle weight rating (GVWR) means the value specified by the manufacturer as the maximum design loaded weight of a single vehicle.

Hang-up refers to the process of hydrocarbon molecules being adsorbed, condensed, or by any other method removed from the sample flow prior to reaching the instrument detector. It also refers to any subsequent desorption of the molecules into the sample flow when they are assumed to be absent.

Heating degree day means the number of degrees per day the daily average temperature is below 65 degrees Fahrenheit. The daily average temperature is the mean of the maximum and minimum temperature for a 24-hour period. The annual heating degree day value is derived by summing the daily heating degree days over a calendar year period.

Heavy light-duty truck means any light-duty truck rated greater than 6000 lbs GVWR. The LDT3 and LDT4 classifications comprise the heavy light-duty truck category.

Heavy-duty engine means any engine which the engine manufacturer could reasonably expect to be used for motive power in a heavy-duty vehicle.

Heavy-duty vehicle means any motor vehicle rated at more than 8,500 pounds GVWR or that has a vehicle curb weight of more than 6,000 pounds or that has a basic vehicle frontal area in excess of 45 square feet.

High altitude means any elevation over 1,219 meters (4,000 feet).

High-altitude conditions means a test altitude of 1,620 meters (5,315 feet), plus or minus 100 meters (328 feet), or equivalent observed barometric test conditions of 83.3 kPa (24.2 inches Hg) plus or minus 1 kPa (0.30 Hg).

Hot-soak emissions and *Hot-soak losses* means evaporative emissions after termination of engine operation.

Incomplete heavy-duty vehicle means any heavy-duty vehicle which does not have the primary load carrying device or container attached.

Incomplete truck means any truck which does not have the primary load carrying device or container attached.

Indirect information means any information that is not specifically contained in the service literature, but is contained in items such as tools or equipment provided to franchised dealers (or others).

Inertia weight class means the class, which is a group of equivalent test weights, into which a vehicle is grouped based on its test weight basis in accordance with the provisions of this Part 86.

Integrated refueling emission control system means a system where vapors resulting from refueling are stored in a common vapor storage unit(s) with other evaporative emissions of the vehicle and are purged through a common purge system.

Interim non-Tier 2 vehicle, *interim non-Tier 2 LDV/LLDT*, *interim non-Tier 2 HLDT/MDPV*, or *interim vehicle* refer to 2004 or later model year light-duty vehicles, light-duty trucks or MDPVs, or a specific combination thereof, not certified to Tier 2 FTP exhaust emission standards during the Tier 2 phase-in period. Model year 2004 HLDTs belonging to test groups whose model year commences before December 21, 2003, are not interim non-Tier 2 HLDTs unless their manufacturer chooses to comply with the interim requirements applicable to HLDTs for all of its 2004 model year HLDTs as permitted in this

subpart. Similarly 2004 model year heavy-duty vehicles whose model year commences before December 21, 2003, are not interim non-Tier 2 MDPVs unless their manufacturer chooses to comply with the interim requirements applicable to MDPVs for all of its 2004 model year MDPVs as permitted in this subpart. The terms *interim non-Tier 2 vehicle*, *interim non-Tier 2 LDV*, *interim non-Tier 2 LDT*, *interim non-Tier 2 HLDT*, *interim non-Tier 2 MDPV*, etc. have the same meaning without the words ''non-Tier 2''.

Intermediary means any individual or entity, other than a manufacturer, which provides service or equipment to automotive technicians.

Intermediate temperature cold testing means testing done pursuant to the driving cycle and testing conditions contained in subpart C of this part, at temperatures between 25 deg.F (−4 deg. C) and 68 deg. F (20 deg. C).

In-use vehicle means a customer owned and operated vehicle which is not under the control of the manufacturer, dealerships or their agents. Leased vehicles will be considered in-use vehicles for the purpose of this subpart if the vehicles meet the criteria specified in § 86.1845–01.

In-use verification program (IUVP) means the testing program conducted by manufacturers which gathers in-use emission data in accordance with § 86.1848–01.

LDV/T means light-duty vehicles and light-duty trucks collectively, without regard to category.

Light light-duty truck means any light-duty truck rated up through 6000 lbs GVWR. The LDT1 and LDT2 classifications compose the light light-duty truck category.

Light-duty truck means any motor vehicle rated at 8,500 pounds GVWR or less which has a curb weight of 6,000 pounds or less and which has a basic vehicle frontal area of 45 square feet or less, which is:

(1) Designed primarily for purposes of transportation of property or is a derivation of such a vehicle; or

(2) Designed primarily for transportation of persons and has a capacity of more than 12 persons; or

(3) Available with special features enabling off-street or off-highway operation and use.

Light-duty truck 1 (LDT1) means any light light-duty truck up through 3750 lbs loaded vehicle weight.

Light-duty truck 2 (LDT2) means any light light-duty truck greater than 3750 lbs loaded vehicle weight.

Light-duty truck 3 (LDT3) means any heavy light-duty truck up through 5750 lbs adjusted loaded vehicle weight.

Light-duty truck 4 (LDT4) means any heavy light-duty truck greater than 5750 lbs adjusted loaded vehicle weight.

Light-duty vehicle means a passenger car or passenger car derivative capable of seating 12 passengers or less.

Liquefied petroleum gas means a liquid hydrocarbon fuel that is stored under pressure and is composed primarily of species that are gases at atmospheric conditions (temperature = 25 deg. C and pressure = 1 atm), excluding natural gas.

Loaded vehicle weight means the vehicle's curb weight plus 300 pounds.

Low altitude means any elevation equal to or less than 1,219 meters (4,000 feet).

Low altitude conditions means a test altitude less than 549 meters (1,800 feet).

Malfunction means not operating according to specifications (e.g., those specifications listed in the certification application).

Medium-duty passenger vehicle (MDPV) means any heavy-duty vehicle (as defined in this subpart) with a gross vehicle weight rating (GVWR) of less than 10,000 pounds that is designed primarily for the transportation of persons. The MDPV definition does not include any vehicle which:

(1) Is an ''incomplete truck'' as defined in this subpart; or

(2) Has a seating capacity of more than 12 persons; or

(3) Is designed for more than 9 persons in seating rearward of the driver's seat; or

(4) Is equipped with an open cargo area (for example, a pick-up truck box or bed) of 72.0 inches in interior length or more. A covered box not readily accessible from the passenger compartment will be considered an open cargo area for purposes of this definition.

Methanol-fueled vehicle means any motor vehicle or motor vehicle engine that is engineered and designed to be operated using methanol fuel (i.e., a fuel that contains at least 50 percent methanol (CH3OH) by volume) as fuel. Model means a specific combination of car line, body style, and drivetrain configuration.

Model type means a unique combination of car line, basic engine, and transmission class.

Model year means the manufacturer's annual production period (as determined by the Administrator) which includes January 1 of such calendar year: Provided that if the manufacturer has no annual production period, the term ''model year'' shall mean the calendar year.

Multi-fuel means capable of operating on two or more different fuel types, either separately or simultaneously.

Natural gas means a fuel whose primary constituent is methane.

Nominal fuel tank capacity means the volume of the fuel tank(s), specified by the manufacturer to the nearest tenth of a U.S. gallon, which may be filled with fuel from the fuel tank filler inlet.

Non-emission-related maintenance means that maintenance which does not substantially affect emissions and which does not have a lasting effect on the emissions deterioration of the vehicle or engine during normal in-use operation once the maintenance is performed.

Non-integrated refueling emission control system means a system where fuel vapors from refueling are stored in a vapor storage unit assigned solely to the function of storing refueling vapors.

Non-Methane Hydrocarbon Equivalent means the sum of the carbon mass emissions of non-oxygenated non-methane hydrocarbons, methanol, formaldehyde, or other organic compounds that are separately measured, expressed as gasoline-fueled vehicle hydrocarbons. In the case of exhaust emissions, the hydrogen-to-carbon ratio of the equivalent hydrocarbon is 1.85:1. In the case of diurnal and hot soak emissions, the hydrogen-to-carbon ratios of the equivalent hydrocarbons are 2.33:1 and 2.2:1, respectively.

Non-methane organic gases (NMOG) means the sum of oxygenated and non-oxygenated hydrocarbons contained in a gas sample as measured in accordance with the California Non-Methane Organic Gas Test Procedures. These requirements are incorporated by reference (see § 86.1)

Non-oxygenated hydrocarbon means organic emissions measured by a flame ionization detector, excluding methanol.

N/V means the ratio of engine speed in revolutions per minute (rpm) to vehicle speed in miles per hour in the top transmission gear. At the manufacturer's option, either the 1:1 transmission gear ratio or the lowest numerical gear ratio available in the transmission will be used to determine N/V.

Option, in the context of a vehicle design feature, means any available equipment or feature not standard equipment on a model.

Original Equipment Manufacturer (OEM) means the manufacturer responsible for the design and production of a vehicle or component. This manufacturer will be fully knowledgeable of any production changes made to the design of the vehicle or component and shall be able to track the individual vehicles or component with regard to such production changes.

Otto-cycle means type of engine with operating characteristics significantly similar to the theoretical Otto combustion cycle. The use of a throttle during normal operation is indicative of an Otto-cycle engine.

Oxides of nitrogen means the sum of the nitric oxide and nitrogen dioxide contained in a gas sample as if the nitric oxide were in the form of nitrogen dioxide.

Periodically regenerating trap oxidizer system means a trap oxidizer that utilizes, during normal driving conditions, an automated regeneration mode for cleaning the trap, the operation of which can be easily detected.

Petroleum fuel means liquid fuels normally derived from crude oil, excluding liquefied petroleum gas. Gasoline and diesel fuel are petroleum fuels.

Point of first sale means the location where the completed vehicle is first

purchased. This term is synonymous with final product purchase location. The point of first sale may be a retail customer, dealer, distributor, fleet operator, broker, secondary manufacturer, or any other entity which purchases a vehicle from a manufacturer. In cases where the end user purchases the completed vehicle directly from the manufacturer, the end user is the point of first sale.

Precision means the standard deviation of replicated measurements.

Proven emission control systems are emission control components or systems (and fuel metering systems) that have completed full durability testing evaluation over a vehicle's useful life in some other certified test group, or have completed bench or road testing demonstrated to be equal or more severe than certification mileage accumulation requirements. Alternatively, proven components or systems are those that are determined by EPA to be of comparable functional quality and manufactured using comparable materials and production techniques as components or systems which have been durability demonstrated in some other certified test group. In addition, the components or systems must be employed in an operating environment (e.g., temperature, exhaust flow, etc.,) similar to that experienced by the original or comparable components or systems in the original certified test group.

Recall program means the program administered by the Agency under the authority of CAA section 207, and regulations in 40 CFR part 85.

Reconfigured emission-data vehicle means an emission-data vehicle obtained by modifying a previously used emission-data vehicle to represent another emission-data vehicle.

Refueling emissions means evaporative emissions that emanate from a motor vehicle fuel tank(s) during a refueling operation.

Refueling emissions canister(s) means any vapor storage unit(s) that is exposed to the vapors generated during refueling.

Resting losses means evaporative emissions that may occur continuously, that are not diurnal emissions, hot soak emissions, refueling emissions, running losses, or spitback emissions.

Round, rounded or *rounding* means, unless otherwise specified, that numbers will be rounded according to ASTM-E29-93a, which is incorporated by reference in this part pursuant to § 86.1.

Running change means a change to a vehicle or addition of a model which occurs after certification but during vehicle production.

Running losses means evaporative emissions that occur during vehicle operation.

SC03 means the test cycle, described in § 86.160–00 and listed in Appendix I, paragraph (h), of this part, which is designed to represent driving immediately following startup.

Scheduled maintenance means any adjustment, repair, removal, disassembly, cleaning, or replacement of vehicle components or systems which is performed on a periodic basis to prevent part failure or vehicle (if the engine were installed in a vehicle) malfunction, or anticipated as necessary from inspection to correct an overt indication of vehicle malfunction or failure for which periodic maintenance is not appropriate.

Secondary air injection means a system whereby air (not ingested by the engine) is introduced into the exhaust system in front of a catalyst.

Similar emission control systems are engine, fuel metering and emission control system combinations which use the same fuel (e.g., gasoline, diesel, etc.), combustion cycle (e.g., two or four stroke), general type of fuel system (e.g., carburetor or fuel injection), catalyst system (e.g., none, oxidization, three-way plus oxidization, three-way only, etc.), fuel control system (e.g., feedback or non-feedback), secondary air system (e.g., equipped or not equipped) and exhaust gas recirculation (EGR) (e.g., equipped or not equipped).

Span gas means a gas of known concentration which is used routinely to set the output level of an analyzer.

Special features enabling off-street or off-highway operation and use means a vehicle that has:

(1) Four-wheel drive; and

(2) At least four of the following characteristics calculated when the automobile is at curb weight, on a level surface, with the front wheels parallel to the vehicle's longitudinal centerline, and the tires inflated to the manufacturer's recommended pressure; approach angle of not less than 28 degrees, breakover angle of not less than 14 degrees, departure angle of not less than 20 degrees, running clearance of not less than 8 inches, and front and rear axle clearances of not less than 7 inches each.

Spitback emissions means evaporative emissions resulting from the loss of liquid fuel that is emitted from a vehicle during a fueling operation.

Standard equipment means those features or equipment which are marketed on a vehicle over which the purchaser can exercise no choice.

Static loaded radius arc means a portion of a circle whose center is the center of a standard tire-rim combination of an automobile and whose radius is the distance from that center to the level surface on which the automobile is standing, measured with the automobile at curb weight, the wheel parallel to the vehicle's longitudinal centerline, and the tire inflated to the manufacturer's recommended pressure.

Supplemental FTP (SFTP) means the additional test procedures designed to measure emissions during aggressive and microtransient driving, as described in § 86.159–00 over the US06 cycle, and also the test procedure designed to measure urban driving emissions while the vehicle's air conditioning system is operating, as described in § 86.160–00 over the SC03 cycle.

Tank fuel volume means the volume of fuel in the fuel tank(s), which is determined by taking the manufacturer's nominal fuel tank(s) capacity and multiplying by 0.40. The result is rounded to the nearest tenth of a U.S. gallon in accordance with the Rounding-Off Method specified in ASTM E29–93a, Standard Practice for Using Significant Digits in Test Data to Determine Conformance with Specifications (incorporated by reference; see § 86.1)

Test group means the basic classification unit within a durability group used for the purpose of demonstrating compliance with exhaust emission standards in accordance with § 86.1841–01. The test group is also used as a classification unit for gathering in-use data for the In-Use Verification Program (IUVP) in accordance with § 86.1848–01.

Test weight basis means the basis on which equivalent test weight is determined in accordance with § 86.129–00 of subpart B of this part.

Throttle means a device used to control an engine's power output by limiting the amount of air entering the combustion chamber.

Tier 2 HLDT/MDPV means any heavy light-duty truck or medium-duty passenger vehicle, including HEVs and ZEVs, of the 2008 or later model year certified to comply with the Tier 2 FTP exhaust standards contained in § 86.1811–04 including the 0.07 g/mi fleet average NO_X standard. The term Tier 2 HLDT/MDPV also includes any heavy light-duty truck or medium-duty passenger vehicle, of any model year, which is certified to Tier 2 FTP exhaust standards for purposes of generating or banking early NO_X credits for averaging under Tier 2 requirements, or utilizing alternate phase-in schedules, as allowed in this subpart.

Tier 2 LDV/LLDT means any light-duty vehicle or light light-duty truck, including HEVs and ZEVs, of the 2004 or later model year certified to comply with the Tier 2 FTP exhaust standards contained in § 86.1811–04 including the 0.07 g/mi fleet average NO_X standard. The term Tier 2 LDV/LLDT also includes any light-duty vehicle or light light-duty truck, of any model year, which is certified to Tier 2 FTP exhaust standards for purposes of generating or banking early NO_X credits for averaging under Tier 2 requirements, or utilizing alternate phase-in schedules as allowed in this subpart.

Tier 2 standards means those FTP exhaust emission standards *including the 0.07 g/mi full useful life fleet average NO_X standard*, applicable to new light-duty vehicles and light light-duty trucks that begin a phase-in in the 2004 model year, and those exhaust emission standards *including the 0.07 g/mi full useful life fleet average NO_X standard*, applicable to heavy light-duty trucks and medium-duty passenger vehicles that

begin a phase-in in the 2008 model year. These standards are found in § 86.1811–04 of this subpart.

Tier 2 vehicle means any vehicle certified to comply with the Tier 2 FTP exhaust standards contained in § 86.1811–04 including the 0.07 g/mi fleet average NO_X standard.

Total hydrocarbon equivalent means the sum of the carbon mass emissions of non-oxygenated hydrocarbons, methanol, formaldehyde or other organic compounds that are separately measured, expressed as gasoline-fueled vehicle hydrocarbons. In the case of exhaust emissions, the hydrogen-to-carbon ratio of the equivalent hydrocarbon is 1.85:1. In the case of diurnal and hot soak emissions, the hydrogen-to-carbon ratios of the equivalent hydrocarbons are 2.33:1 and 2.2:1, respectively.

Trading means the exchange of complete heavy-duty vehicle NO_X emission credits between manufacturers.

Transmission class means the basic type of transmission, e.g., manual, automatic, semiautomatic.

Transmission configuration means a unique combination, within a transmission class, of the number of the forward gears and, if applicable, overdrive. The Administrator may further subdivide a transmission configuration (based on such criteria as gear ratios, torque convertor multiplication ratio, stall speed and shift calibration, etc.), if she/he determines that significant fuel economy or exhaust emission differences exist within that transmission configuration.

U.S. heavy-duty vehicle sales means sales of heavy-duty vehicles subject to the standards of this subpart, where the sale takes place in any state of the United States except for California (or a state that has adopted California motor vehicle standards for that model year pursuant to section 177 of the Clean Air Act).

U.S. sales means, unless otherwise specified, sales in any state of the United States except for California or a state that has adopted California motor vehicle standards for that model year pursuant to section 177 of the Clean Air Act. This definition applies only to those regulatory requirements addressing Tier 2 and interim non-Tier 2 vehicles.

Unproven emission control systems are emission control components or systems (and fuel metering systems) that do not qualify as proven emission control systems.

Unscheduled maintenance means any adjustment, repair, removal disassembly, cleaning, or replacement of vehicle components or systems which is performed to correct a part failure or vehicle (if the engine were installed in a vehicle) malfunction which was not anticipated.

US06 means the test cycle, described in § 86.159–00 and listed in appendix I, paragraph (g), of this part, which is designed to evaluate emissions during aggressive and microtransient driving.

Useful life means the period of use or time during which an emission standard applies to light-duty vehicles and light-duty trucks, as described in § 86.1805–01.

Van means a light-duty truck or complete heavy-duty vehicle having an integral enclosure, fully enclosing the driver compartment and load carrying device, and having no body sections protruding more than 30 inches ahead of the leading edge of the windshield.

Vehicle configuration means a unique combination of basic engine, engine code, inertia weight class, transmission configuration, and axle ratio.

Zero (0) miles means that point after initial engine starting (not to exceed 100 miles of vehicle operation, or three hours of engine operation) at which normal assembly line operations and adjustments are completed, and including emission testing, if performed.

[64 FR 23925, May 4, 1999, as amended at 65 FR 6851, Feb. 10, 2000; 65 FR 59964, Oct. 6, 2000; 66 FR 5189, Jan. 18, 2001; 71 FR 2829, Jan. 17, 2006]

§ 86.1804–01 Acronyms and abbreviations.

The following abbreviations apply to this subpart:

A/C—Air conditioning.
AECD—Auxiliary emission control device.
A/F—Air/Fuel
ALVW—Adjusted Loaded Vehicle Weight.
API—American Petroleum Institute.
ASTM—American Society for Testing and Materials.
BAT—Bench-Aging Time

C—Celsius.
cfm—Cubic feet per minute.
CFV—Critical flow venturi.
CFV-CVS—Critical flow venturi—constant volume sampler.
CH3OH—Methanol.
CID—Cubic inch displacement.
Cl—Chemiluminescence.
CO—Carbon monoxide.
CO2—Carbon dioxide.
conc.—Concentration.
CST—Certification Short Test.
cu. in.—Cubic inch(es).
CVS—Constant volume sampler.
DDV—Durability Data Vehicle.
deg.—Degree(s).
DNPH—2,4-dinitrophenylhydrazine.
EDV—Emission Data Vehicle.
EP—End point.
ETW—Equivalent test weight.
F—Fahrenheit.
FEL—Family Emission Limit.
FID—Flame ionization detector.
ft.—Feet.
FTP—Federal Test Procedure.
g—gram(s).
gal.—U.S. gallon(s).
GC—Gas chromatograph.
GVW—Gross vehicle weight.
GVWR—Gross vehicle weight rating.
H2O—Water.
HC—Hydrocarbon(s).
HCHO—Formaldehyde.
HDV—Heavy-duty vehicle.
HEV—Hybrid electric vehicle.
HFID—Heated flame ionization detector.
Hg—Mercury.
HLDT—Heavy light-duty truck. Includes only those trucks over 6000 pounds GVWR (LDT3s and LDT4s).
HLDT/MDPV—Heavy light-duty trucks and medium-duty passenger vehicles.
hp—Horsepower.
HPLC—High-pressure liquid chromatography.
IBP—Initial boiling point.
in.—Inch(es).
IUVP—In-Use Verification Program.
K—Kelvin.
kg—Kilogram(s).
km—Kilometer(s).
kPa—Kilopascal(s).
lb.—Pound(s).
LDT1—Light-duty truck 1.
LDT2—Light-duty truck 2.
LDT3—Light-duty truck 3.
LDT4—Light-duty truck 4.
LDV/LLDT—Light-duty vehicles and light light-duty trucks. Includes only those trucks rated at 6000 pounds GVWR or less (LDT1s and LDT2s).
LDV/T—Light-duty vehicles and light-duty trucks. This term is used collectively to include, or to show that a provision applies to, all light-duty vehicles and all categories of light-duty trucks, i.e. LDT1, LDT2, LDT3 and LDT4.
LEV—Low Emission Vehicle.
LPG—Liquefied Petroleum Gas.
m—Meter(s).
max.—Maximum.
MDPV—Medium-duty passenger vehicle.
mg—Milligram(s).
mi.—Mile(s).
min.—Minimum.
ml—Milliliter(s).
mm—Millimeter(s).
mph—Miles per hour.
mV—Millivolt
N2—Nitrogen.
NDIR—Nondispersive infrared.
NLEV—Refers to the National Low Emission Vehicle Program. Regulations governing this program are found at subpart R of this part.
NMHC—Nonmethane Hydrocarbons.
NMHCE—Non-Methane Hydrocarbon Equivalent.
NMOG—Non-methane organic gases.
NO—nitric oxide.
No.—Number.
O2—Oxygen.
OEM—Original equipment manufacturer.
NO2—Nitrogen dioxide.
NO_X—Oxides of nitrogen.
Pb—Lead.
pct.—Percent.
PDP-CVS—Positive displacement pump—constant volume sampler.
ppm—Parts per million by volume.
PM—Particulate Matter.
ppm C—Parts per million, carbon.
psi—Pounds per square inch.
R—Rankin.
RAF—Reactivity adjustment factor.
rpm—Revolutions per minute.
RVP—Reid vapor pressure.
s—Second(s).
SAE—Society of Automotive Engineers.
SBC—Standard Bench Cycle
SFTP—Supplemental Federal Test Procedure.
SI—International system of units.
SRC—Standard Road Cycle
SULEV—Super Ultra Low Emission Vehicle.
TD—dispensed fuel temperature.
THC—Total Hydrocarbons.
THCE—Total Hydrocarbon Equivalent.
TLEV—Transitional Low Emission Vehicle.
UDDS—Urban dynamometer driving schedule.
ULEV—Ultra Low Emission Vehicle.
UV—Ultraviolet.
vs—Versus.
W—Watt(s).
WOT—Wide open throttle.
Wt.—Weight.
ZEV—Zero Emission Vehicle.

[64 FR 23925, May 4, 1999, as amended at 65 FR 6852, Feb. 10, 2000; 65 FR 59965, Oct. 6, 2000; 71 FR 2829, Jan. 17, 2006]

§ 86.1805–01 Useful life.

(a) For light-duty vehicles and light-duty trucks, intermediate useful life is a period of use of 5 years or 50,000 miles, whichever occurs first.

(b) Full useful life is as follows:

(1) For light-duty vehicles and light light-duty trucks full useful life is a period of use of 10 years or 100,000 miles, which ever occurs first.

(2) For heavy light-duty trucks full useful life is a period of use of 11 years or 120,000 miles, which ever occurs first.

(3) For complete heavy-duty vehicles, the full useful life is a period of use of 11 years or 120,000 miles, which ever occurs first.

(c) Manufacturers may petition the Administrator to provide alternative useful life periods for light-duty trucks or complete heavy-duty vehicles when they believe that the useful life periods are significantly unrepresentative for one or more test groups (either too long or too short). This petition must include the full rationale behind the request together with any supporting data and other evidence. Based on this or other information the Administrator may assign an alternative useful-life period. Any petition should be submitted in a timely manner, to allow adequate time for a thorough evaluation. For light-duty trucks, alternative useful life periods will be granted only for THC, THCE, and idle CO requirements.

[64 FR 23925, May 4, 1999, as amended at 65 FR 59965, Oct. 6, 2000]

§ 86.1805–04 Useful life.

(a) Except as required under paragraph (b) of this section or permitted under paragraphs (d), (e) and (f) of this section, the full useful life for all LDVs, LDT1s and LDT2s is a period of use of 10 years or 120,000 miles, whichever occurs first. For all HLDTs, MDPVs, and complete heavy-duty vehicles full useful life is a period of 11 years or 120,000 miles, whichever occurs first. This full useful life applies to all exhaust, evaporative and refueling emission requirements except for standards which are specified to only be applicable at the time of certification.

(b) Manufacturers may elect to optionally certify a test group to the Tier 2 exhaust emission standards for 150,000 miles to gain additional NO_X credits, as permitted in § 86.1860–04(g), or to opt out of intermediate life standards as permitted in § 86.1811–04(c). In such cases, useful life is a period of use of 15 years or 150,000 miles, whichever occurs first, for all exhaust, evaporative and refueling emission requirements except for cold CO standards and standards which are applicable only at the time of certification.

(c) Where intermediate useful life exhaust emission standards are applicable, such standards are applicable for five years or 50,000 miles, whichever occurs first.

(d) Where cold CO standards are applicable, the useful life requirement for compliance with the cold CO standard only, is 5 years or 50,000 miles, whichever occurs first.

(e) Where LDVs, LDT1s and LDT2s of the 2003 or earlier model years are certified to Tier 2 exhaust emission standards for purposes of generating early Tier 2 NO_X credits, manufacturers may certify those vehicles to full useful lives of 100,000 miles in lieu of the otherwise required 120,000 mile full useful lives, as provided under § 86.1861–04(c)(4).

(f) For interim non-Tier 2 LDV/LLDTs, the useful life requirement for exhaust, evaporative and refueling emissions is 10 years or 100,000 miles, whichever occurs first.

[65 FR 6852, Feb. 10, 2000, as amended at 65 FR 59965, Oct. 6, 2000]

§ 86.1806–01 On-board diagnostics.

(a)(1) Except as provided by paragraph (a)(2) of this section, all light-duty vehicles, light-duty trucks and MDPVs must be equipped with an on-board diagnostic (OBD) system capable of monitoring, for each vehicle's useful life, all emission-related powertrain systems or components. All systems and components required to be monitored by these regulations must be evaluated periodically, but no less frequently than once per Urban Dynamometer Driving Schedule as defined in Appendix I, paragraph (a), of this part, or similar trip as approved by the Administrator.

(2) Diesel fueled chassis-certified MDPVs and engine-certified diesel engines used in MDPVs, are subject to the requirements of this section only if the exhaust emission certification of the applicable test group is being carried across from a California configuration to which California OBD-II requirements are applicable.

(b) *Malfunction descriptions.* The OBD system shall detect and identify malfunctions in all monitored emission-related powertrain systems or components according to the following malfunction definitions as measured and calculated in accordance with test procedures set forth in subpart B of this part, excluding those test procedures described in § 86.158–00. Paragraph (b)(1) of this section does not apply to diesel cycle light-duty vehicles or diesel cycle light-duty trucks, except where the catalyst is needed for NMHC control. Paragraphs (b)(2), (b)(3), and (b)(4) of this section do not apply to diesel cycle light-duty vehicles or diesel cycle light-duty trucks.

(1) Catalyst deterioration or malfunction before it results in an increase in NMHC emissions 1.5 times the NMHC standard, as compared to the NMHC emission level measured using a representative 4000 mile catalyst system.

(2) Engine misfire resulting in exhaust emissions exceeding 1.5 times the applicable standard for NMHC, CO or NO_X; and any misfire capable of damaging the catalytic converter.

(3) Oxygen sensor deterioration or malfunction resulting in exhaust emissions exceeding 1.5 times the applicable standard for NMHC, CO or NO_X.

(4) Any vapor leak in the evaporative and/or refueling system (excluding the tubing and connections between the purge valve and the intake manifold) greater than or equal in magnitude to a leak caused by a 0.040 inch diameter orifice; any absence of evaporative purge air flow from the complete evaporative emission control system. On vehicles with fuel tank capacity greater than 25 gallons, the Administrator may, following a request from the manufacturer, revise the size of the orifice to the smallest orifice feasible, based on test data, if the most reliable monitoring method available cannot reliably detect a system leak equal to a 0.040 inch diameter orifice.

(5) Any deterioration or malfunction occurring in a powertrain system or component directly intended to control emissions, including but not necessarily limited to, the exhaust gas recirculation (EGR) system, if equipped, the secondary air system, if equipped, and the fuel control system, singularly resulting in exhaust emissions exceeding 1.5 times the applicable emission standard for NMHC, CO or NO_X. For vehicles equipped with a secondary air system, a functional check, as described in paragraph (b)(6) of this section, may satisfy the requirements of this paragraph provided the manufacturer can demonstrate that deterioration of the flow distribution system is unlikely. This demonstration is subject to Administrator approval and, if the demonstration and associated functional check are approved, the diagnostic system shall indicate a malfunction when some degree of secondary airflow is not detectable in the exhaust system during the check. For vehicles equipped with positive crankcase ventilation (PCV), monitoring of the PCV system is not necessary provided the manufacturer can demonstrate to the Administrator's satisfaction that the PCV system is unlikely to fail.

(6) Any other deterioration or malfunction occurring in an electronic emission-related powertrain system or component not otherwise described above that either provides input to or receives commands from the on-board computer and has a measurable impact on emissions; monitoring of components required by this paragraph shall be satisfied by employing electrical circuit continuity checks and rationality checks for computer input components (input values within manufacturer specified ranges), and functionality checks for computer output components (proper functional response to computer commands) except that the Administrator may waive such a rationality or functionality check where the manufacturer has demonstrated infeasibility; malfunctions are defined as a failure of the system or component to meet the electrical circuit continuity checks or the rationality or functionality checks.

(7) Oxygen sensor or any other component deterioration or malfunction which renders that sensor or component incapable of performing its function as part of the OBD system shall be detected and identified on vehicles so equipped.

(8) *For Tier 2 and interim non-Tier 2 hybrid electric vehicles (HEVs) only*. Unless added to HEVs in compliance with other requirements of this section, or unless otherwise approved by the Administrator:

(i) The manufacturer must equip each HEV with a maintenance indicator consisting of a light that must activate automatically by illuminating the first time the minimum performance level is observed for each battery system component. Possible battery system components requiring monitoring are: battery water level, temperature control, pressure control, and other parameters critical for determining battery condition.

(ii) The manufacturer must equip ''off-vehicle charge capable HEVs'' with a useful life indicator for the battery system consisting of a light that must illuminate the first time the battery system is unable to achieve an all-electric operating range (starting from a full state-of-charge) which is at least 75 percent of the range determined for the vehicle in the Urban Driving Schedule portion of the All-Electric Range Test (see the California Exhaust Emission Standards and Test Procedures for 2003 and Subsequent Model Zero-Emission Vehicles, and 2001 and Subsequent Model Hybrid Electric Vehicles, in the Passenger Car, Light-Duty Truck and Medium-Duty Vehicle Classes. These requirements are incorporated by reference (see § 86.1).

(iii) The manufacturer must equip each HEV with a separate odometer or other device subject to the approval of the Administrator that can accurately measure the mileage accumulation on the engines used in these vehicles.

(c) *Malfunction indicator light*. The OBD system shall incorporate a malfunction indicator light (MIL) readily visible to the vehicle operator. When illuminated, it shall display ''Check Engine,'' ''Service Engine Soon,'' a universally recognizable engine symbol, or a similar phrase or symbol approved by the Administrator. A vehicle shall not be equipped with more than one general purpose malfunction indicator light for emission-related problems; separate specific purpose warning lights (e.g. brake system, fasten seat belt, oil pressure, etc.) are permitted. The use of red for the OBD-related malfunction indicator light is prohibited.

(d) *MIL illumination*. (1) The MIL shall illuminate and remain illuminated when any of the conditions specified in paragraph (b) of this section are detected and verified, or whenever the engine control enters a default or secondary mode of operation considered abnormal for the given engine operating conditions. The MIL shall blink once per second under any period of operation during which engine misfire is occurring and catalyst damage is imminent. If such misfire is detected again during the following driving cycle (i.e., operation consisting of, at a minimum, engine start-up and engine shut-off) or the next driving cycle in which similar conditions are encountered, the MIL shall maintain a steady illumination when the misfire is not occurring and shall remain illuminated until the MIL extinguishing criteria of this section are satisfied. The MIL shall also illuminate when the vehicle's ignition is in the ''key-on'' position before engine starting or cranking and extinguish after engine starting if no malfunction has previously been detected. If a fuel system or engine misfire malfunction has previously been detected, the MIL may be extinguished if the malfunction does not reoccur during three subsequent sequential trips during which similar conditions are encountered (engine speed is within 375 rpm, engine load is within 20 percent, and the engine's warm-up status is the same as that under which the malfunction was first detected), and no new malfunctions have been detected. If any malfunction other than a fuel system or engine misfire malfunction has been detected, the MIL may be extinguished if the malfunction does not reoccur during three subsequent sequential trips during which the monitoring system responsible for illuminating the MIL functions without detecting the malfunction, and no new malfunctions have been detected. Upon

Administrator approval, statistical MIL illumination protocols may be employed, provided they result in comparable timeliness in detecting a malfunction and evaluating system performance, i.e., three to six driving cycles would be considered acceptable.

(2)(i) For interim non-Tier 2 and Tier 2 LDV/LLDTs and HLDT/MDPVs, vehicles produced through the 2007 model year, upon a manufacturer's written request, EPA will consider allowing the use of an on-board diagnostic system during the certification process, that functions properly on low-sulfur gasoline, but indicates sulfur-induced passes when exposed to high sulfur gasoline.

(ii) For interim non-Tier 2 and Tier 2 LDV/LLDTs and HLDT/MDPVs, if vehicles produced through the 2007 model year exhibit illuminations of the emission control diagnostic system malfunction indicator light due to high sulfur gasoline, EPA will consider, upon a manufacturer's written request, allowing modifications to such vehicles on a case-by-case basis so as to eliminate the sulfur induced illumination.

(e) *Storing of computer codes.* The emission control diagnostic system shall record and store in computer memory diagnostic trouble codes and diagnostic readiness codes indicating the status of the emission control system. These codes shall be available through the standardized data link connector per SAE J1979 specifications as incorporated by reference in paragraph (h) of this section.

(1) A diagnostic trouble code shall be stored for any detected and verified malfunction causing MIL illumination. The stored diagnostic trouble code shall identify the malfunctioning system or component as uniquely as possible. At the manufacturer's discretion, a diagnostic trouble code may be stored for conditions not causing MIL illumination. Regardless, a separate code should be stored indicating the expected MIL illumination status (i.e., MIL commanded ''ON,'' MIL commanded ''OFF'').

(2) For a single misfiring cylinder, the diagnostic trouble code(s) shall uniquely identify the cylinder, unless the manufacturer submits data and/or engineering evaluations which adequately demonstrate that the misfiring cylinder cannot be reliably identified under certain operating conditions. The diagnostic trouble code shall identify multiple misfiring cylinder conditions; under multiple misfire conditions, the misfiring cylinders need not be uniquely identified if a distinct multiple misfire diagnostic trouble code is stored.

(3) The diagnostic system may erase a diagnostic trouble code if the same code is not re-registered in at least 40 engine warm-up cycles, and the malfunction indicator light is not illuminated for that code.

(4) Separate status codes, or readiness codes, shall be stored in computer memory to identify correctly functioning emission control systems and those emission control systems which require further vehicle operation to complete proper diagnostic evaluation. A readiness code need not be stored for those monitors that can be considered continuously operating monitors (e.g., misfire monitor, fuel system monitor, etc.). Readiness codes should never be set to ''not ready'' status upon key-on or key-off; intentional setting of readiness codes to ''not ready'' status via service procedures must apply to all such codes, rather than applying to individual codes. Subject to Administrator approval, if monitoring is disabled for a multiple number of driving cycles (i.e., more than one) due to the continued presence of extreme operating conditions (e.g., ambient temperatures below 40°F, or altitudes above 8000 feet), readiness for the subject monitoring system may be set to ''ready'' status without monitoring having been completed. Administrator approval shall be based on the conditions for monitoring system disablement, and the number of driving cycles specified without completion of monitoring before readiness is indicated.

(f) *Available diagnostic data.* (1) Upon determination of the first malfunction of any component or system, ''freeze frame'' engine conditions present at the time shall be stored in computer memory. Should a subsequent fuel system or misfire malfunction occur, any previously stored freeze frame conditions shall be replaced by the fuel system or misfire conditions (whichever

occurs first). Stored engine conditions shall include, but are not limited to: engine speed, open or closed loop operation, fuel system commands, coolant temperature, calculated load value, fuel pressure, vehicle speed, air flow rate, and intake manifold pressure if the information needed to determine these conditions is available to the computer. For freeze frame storage, the manufacturer shall include the most appropriate set of conditions to facilitate effective repairs. If the diagnostic trouble code causing the conditions to be stored is erased in accordance with paragraph (d) of this section, the stored engine conditions may also be erased.

(2) The following data in addition to the required freeze frame information shall be made available on demand through the serial port on the standardized data link connector, if the information is available to the on-board computer or can be determined using information available to the on-board computer: Diagnostic trouble codes, engine coolant temperature, fuel control system status (closed loop, open loop, other), fuel trim, ignition timing advance, intake air temperature, manifold air pressure, air flow rate, engine RPM, throttle position sensor output value, secondary air status (upstream, downstream, or atmosphere), calculated load value, vehicle speed, and fuel pressure. The signals shall be provided in standard units based on SAE specifications incorporated by reference in paragraph (h) of this section. Actual signals shall be clearly identified separately from default value or limp home signals.

(3) For all emission control systems for which specific on-board evaluation tests are conducted (catalyst, oxygen sensor, etc.), the results of the most recent test performed by the vehicle, and the limits to which the system is compared shall be available through the standardized data link connector per SAE J1979 specifications as incorporated by reference in paragraph (h) of this section.

(4) Access to the data required to be made available under this section shall be unrestricted and shall not require any access codes or devices that are only available from the manufacturer.

(g) The emission control diagnostic system is not required to evaluate systems or components during malfunction conditions if such evaluation would result in a risk to safety or failure of systems or components. Additionally, the diagnostic system is not required to evaluate systems or components during operation of a power takeoff unit such as a dump bed, snow plow blade, or aerial bucket, etc.

(h) *Incorporation by reference materials.* The emission control diagnostic system shall provide for standardized access and conform with the following Society of Automotive Engineers (SAE) standards and/or the following International Standards Organization (ISO) standards. The following documents are incorporated by reference. This incorporation by reference was approved by the Director of the Federal Register in accordance with 5 U.S.C. 552(a) and 1 CFR part 51. Copies may be inspected at Docket No. A–90–35 at EPA's Air docket (LE–131), room 1500 M, 1st Floor, Waterside Mall, 401 M St., SW., Washington, DC, or at the National Archives and Records Administration (NARA). For information on the availability of this material at NARA, call 202–741–6030, or go to: *http://www.archives.gov/federal_register/code_of_federal_regulations/ibr_locations.html.*

(1) *SAE material.* Copies of these materials may be obtained from the Society of Automotive Engineers, Inc., 400 Commonwealth Drive, Warrendale, PA 15096–0001.

(i) SAE J1850 ''Class B Data Communication Network Interface,'' (July 1995) shall be used as the on-board to off-board communications protocol. All emission related messages sent to the scan tool over a J1850 data link shall use the Cyclic Redundancy Check and the three byte header, and shall not use inter-byte separation or checksums.

(ii) Basic diagnostic data (as specified in §§ 86.094–17(e) and (f)) shall be provided in the format and units in SAE J1979 July 1996 E/E Diagnostic Test Modes.''

(iii) Diagnostic trouble codes shall be consistent with SAE J2012 July 1996 ''Recommended Practices for Diagnostic Trouble Code Definitions.''

(iv) The connection interface between the OBD system and test equipment and diagnostic tools shall meet the functional requirements of SAE J1962 January 1995 ''Diagnostic Connector.''

(2) *ISO materials.* Copies of these materials may be obtained from the International Organization for Standardization, Case Postale 56, CH–1211 Geneva 20, Switzerland.

(i) ISO 9141–2 February 1994 ''Road vehicles—Diagnostic systems—Part 2: CARB requirements for interchange of digital information,'' may be used as an alternative to SAE J1850 as the on-board to off-board communications protocol.

(ii) [Reserved]

(i) *Deficiencies and alternate fueled vehicles.* Upon application by the manufacturer, the Administrator may accept an OBD system as compliant even though specific requirements are not fully met. Such compliances without meeting specific requirements, or deficiencies, will be granted only if compliance would be infeasible or unreasonable considering such factors as, but not limited to, technical feasibility of the given monitor, lead time and production cycles including phase-in or phase-out of engines or vehicle designs and programmed upgrades of computers, and if any unmet requirements are not carried over from the previous model year except where unreasonable hardware or software modifications would be necessary to correct the noncompliance, and the manufacturer has demonstrated an acceptable level of effort toward compliance as determined by the Administrator. Furthermore, EPA will not accept any deficiency requests that include the complete lack of a major diagnostic monitor (''major'' diagnostic monitors being those for the catalyst, oxygen sensor, engine misfire, and evaporative leaks), with the possible exception of the special provisions for alternate fueled vehicles. For alternate fueled vehicles (e.g. natural gas, liquefied petroleum gas, methanol, ethanol), beginning with the model year for which alternate fuel emission standards are applicable and extending through the 2004 model year, manufacturers may request the Administrator to waive specific monitoring requirements of this section for which monitoring may not be reliable with respect to the use of the alternate fuel. At a minimum, alternate fuel vehicles shall be equipped with an OBD system meeting OBD requirements to the extent feasible as approved by the Administrator.

(j) Demonstration of compliance with California OBD II requirements (Title 13 California Code Sec. 1968.1), as modified pursuant to California Mail Out #97–24 (December 9, 1997), shall satisfy the requirements of this section, except that compliance with Title 13 California Code Secs. 1968.1(b)(4.2.2), pertaining to evaporative leak detection, and 1968.1(d), pertaining to tampering protection, are not required to satisfy the requirements of this section, and the deficiency fine provisions of 1968.1(m)(6.1) and (6.2) shall not apply.

(k) For engine families required to have an emission control diagnostic system (an OBD system), certification will not be granted if, for any test vehicle approved by the Administrator in consultation with the manufacturer, the malfunction indicator light does not illuminate under any of the following circumstances, unless the manufacturer can demonstrate that any identified OBD problems discovered during the Administrator's evaluation will be corrected on production vehicles. Only paragraphs (k)(5) and (k)(6) of this section apply to diesel cycle vehicles and diesel cycle trucks where such vehicles and trucks are so equipped.

(1) A catalyst is replaced with a deteriorated or defective catalyst, or an electronic simulation of such, resulting in an increase of 1.5 times the NMHC standard above the NMHC emission level measured using a representative 4000 mile catalyst system.

(2) An engine misfire condition is induced resulting in exhaust emissions exceeding 1.5 times the applicable standards for NMHC, CO or NO_X.

(3) Any oxygen sensor is replaced with a deteriorated or defective oxygen sensor, or an electronic simulation of such, resulting in exhaust emissions exceeding 1.5 times the applicable standard for NMHC, CO or NO_X.

(4) A vapor leak is introduced in the evaporative and/or refueling system (excluding the tubing and connections between the purge valve and the intake manifold) greater than or equal in magnitude to a leak caused by a 0.040 inch diameter orifice, or the evaporative purge air flow is blocked or otherwise eliminated from the complete evaporative emission control system.

(5) A malfunction condition is induced in any emission-related powertrain system or component, including but not necessarily limited to, the exhaust gas recirculation (EGR) system, if equipped, the secondary air system, if equipped, and the fuel control system, singularly resulting in exhaust emissions exceeding 1.5 times the applicable emission standard for NMHC, CO or NO_X.

(6) A malfunction condition is induced in an electronic emission-related powertrain system or component not otherwise described above that either provides input to or receives commands from the on-board computer resulting in a measurable impact on emissions.

[64 FR 23925, May 4, 1999, as amended at 65 FR 6853, Feb. 10, 2000; 69 FR 18803, Apr. 9, 2004]

§ 86.1806–04 On-board diagnostics.

This § 86.1806–04 includes text that specifies requirements that differ from § 86.1806–01. Where a paragraph in § 86.1806–01 is identical and applicable to § 86.1806–04 this may be indicated by specifying the corresponding paragraph and the statement ''[Reserved]. For guidance see § 86.1806–01.''

(a)–(g). [Reserved]. For guidance see § 86.1806–01.

(h) Reference materials. The OBD system shall provide for standardized access and conform with the following Society of Automotive Engineers (SAE) standards and/or the following International Standards Organization (ISO) standards. The following documents are incorporated by reference, see § 86.1:

(1) SAE material. (i) SAE J1850 ''Class B Data Communication Network Interface,'' (Revised, May 2001) shall be used as the on-board to off-board communications protocol. All emission related messages sent to the scan tool over a J1850 data link shall use the Cyclic Redundancy Check and the three byte header, and shall not use inter-byte separation or checksums.

(ii) Basic diagnostic data (as specified in §§ 86.094–17(e) and (f)) shall be provided in the format and units in SAE J1979 ''E/E Diagnostic Test Modes—Equivalent to ISO/DIS 15031–5:April 30, 2002'', (Revised, April 2002).

(iii) Diagnostic trouble codes shall be consistent with SAE J2012 ''Diagnostic Trouble Code Definitions—Equivalent to ISO/DIS 15031–6:April 30, 2002'', (Revised, April 2002).

(iv) The connection interface between the OBD system and test equipment and diagnostic tools shall meet the functional requirements of SAE J1962 ''Diagnostic Connector—Equivalent to ISO/DIS 15031–3:December 14, 2001'' (Revised, April 2002).

(v) All acronyms, definitions and abbreviations shall be formatted according to SAE J1930 ''Electrical/Electronic Systems Diagnostic Terms, Definitions, Abbreviations, and Acronyms'' Equivalent to ISO/TR 15031–2:April 30, 2002'', (Revised, April 2002).

(vi) All equipment used to interface, extract and display OBD-related information shall meet SAE J1978 ''OBD II Scan Tool'' Equivalent to ISO 15031–4:December 14, 2001'', (Revised, April 2002).

(vii) As an alternative to the above standards, heavy-duty vehicles may conform to the specifications of the SAE J1939 series of standards (SAE J1939–11, J1939–13, J1939–21, J1939–31, J1939–71, J1939–73, J1939–81).

(2) ISO materials. Copies of these materials may be obtained from the International Organization for Standardization, Case Postale 56, CH–1211 Geneva 20, Switzerland.

(i) ISO 9141–2 ''Road vehicles—Diagnostic systems—Part 2: CARB requirements for interchange of digital information,'' (February 1, 1994) may be used as an alternative to SAE J1850 as the on-board to off-board communications protocol.

(ii) ISO 14230–4:2000(E) ''Road vehicles—Diagnostic systems—KWP 2000 requirements for Emission-related systems'', (June 1, 2000) may also be used as an alternative to SAE J1850.

(iii) ISO 15765–4.3:2001 ''Road Vehicles-Diagnostics on Controller Area Network (CAN)—Part 4: Requirements for emission-related systems'', (December 14, 2001) may also be used as an alternative to SAE J1850.

(i) [Reserved]. For guidance see § 86.1806–01.

(j) *California OBDII compliance option.* For heavy-duty engines weighing 14,000 pounds GVWR or less, demonstration of compliance with California OBD II requirements (Title 13 California Code of Regulations § 1968.2 (13 CCR 1968.2)), as modified, approved and filed on April 21, 2003, shall satisfy the requirements of this section, except that compliance with 13 CCR 1968.2(e)(4.2.2)(C), pertaining to 0.02 inch evaporative leak detection, and 13 CCR 1968.2(d)(1.4), pertaining to tampering protection, are not required to satisfy the requirements of this section. Also, the deficiency provisions of 13 CCR 1968.2(i) do not apply. The deficiency provisions of paragraph (i) of this section and the evaporative leak detection requirement of paragraph (b)(4) of this section apply to manufacturers selecting this paragraph for demonstrating compliance. In addition, demonstration of compliance with 13 CCR 1968.2(e)(16.2.1)(C), to the extent it applies to the verification of proper alignment between the camshaft and crankshaft, applies only to vehicles equipped with variable valve timing.

(k) [Reserved]. For guidance see § 86.1806–01.

(l) *Thresholds for California OBD II Compliance Option.* For the purposes of complying with the provisions set forth above in paragraph (j), vehicles certified to Tier 2 standards shall utilize multiplicative factors from the California vehicle type (i.e. LEV II, ULEV II) corresponding to the Tier 2 to which the vehicles are certified. Vehicles certified to Tier 2, Bin 4 emissions standards shall utilize the Tier 2 Bin 4 emission standards and the CARB ULEV II multiplicative factors to determine the appropriate OBD malfunction threshold for all pollutants except NO_X, for which they shall utilize that CARB SULEV II multiplicative factors. Vehicles certified to Tier 2, Bin 3 emissions standards shall utilize the Tier 2 Bin 3 emission standards and the CARB ULEV II multiplicative factors to determine the appropriate OBD malfunction threshold for all pollutants except NO_X, for which they shall utilize that CARB SULEV II multiplicative factors. Vehicles certified to Tier 2, Bin 2 emissions standards shall utilize the Tier 2 Bin 2 emission standards and the CARB SULEV II multiplicative factors to determine the appropriate OBD malfunction threshold. Vehicles certified to Tier 2 Bin 7 or higher shall utilize the CARB LEV II multiplicative factors to determine the appropriate OBD malfunction threshold.

[68 FR 35799, June 17, 2003, as amended at 70 FR 75410, Dec. 20, 2005]

§ 86.1806–05 On-board diagnostics.

(a) *General.* (1) Except as provided by paragraph (a)(2) of this section, all light-duty vehicles, light-duty trucks and complete heavy-duty vehicles weighing 14,000 pounds GVWR or less (including MDPVs) must be equipped with an onboard diagnostic (OBD) system capable of monitoring all emission-related powertrain systems or components during the applicable useful life of the vehicle. All systems and components required to be monitored by these regulations must be evaluated periodically, but no less frequently than once per applicable certification test cycle as defined in paragraphs (a) and (d) of Appendix I of this part, or similar trip as approved by the Administrator.

(2) Diesel fueled MDPVs and heavy-duty vehicles weighing 14,000 pounds GVWR or less that are not MDPVs must meet the OBD requirements of this section according to the phase-in schedule in paragraph (l) of this section. Paragraph (l) of this section does not apply to Otto-cycle MDPVs.

(3) An OBD system demonstrated to fully meet the requirements in § 86.004–17 may be used to meet the requirements of this section, provided that such an OBD system also incorporates appropriate transmission diagnostics as may be required under this section, and provided that the Administrator finds that a manufacturer's decision to use the flexibility in this paragraph (a)(3) is based on good engineering judgement.

(b) *Malfunction descriptions.* The OBD system must detect and identify malfunctions in all monitored emission-related powertrain systems or components according to the following malfunction definitions as measured and calculated in accordance with test procedures set forth in subpart B of this part (chassis-based test procedures), excluding those test procedures defined as ''Supplemental'' test procedures in § 86.004–2 and codified in §§ 86.158, 86.159, and 86.160.

(1) *Catalysts and particulate traps*—(i) *Otto-cycle.* Catalyst deterioration or malfunction before it results in an increase in NMHC emissions 1.5 times the NMHC standard or FEL, as compared to the NMHC emission level measured using a representative 4000 mile catalyst system.

(ii) *Diesel.* (A) If equipped, catalyst deterioration or malfunction before it results in exhaust emissions exceeding 1.5 times the applicable standard or FEL for NO_X or PM. This requirement applies only to reduction catalysts; monitoring of oxidation catalysts is not required. This monitoring need not be done if the manufacturer can demonstrate that deterioration or malfunction of the system will not result in exceedance of the threshold.

(B) If equipped with a particulate trap, catastrophic failure of the device must be detected. Any particulate trap whose complete failure results in exhaust emissions exceeding 1.5 times the applicable standard or FEL for NO_X or PM must be monitored for such catastrophic failure. This monitoring need not be done if the manufacturer can demonstrate that a catastrophic failure of the system will not result in exceedance of the threshold.

(2) *Engine misfire*—(i) *Otto-cycle.* Engine misfire resulting in exhaust emissions exceeding 1.5 times the applicable standard or FEL for NMHC, CO or NO_X; and any misfire capable of damaging the catalytic converter.

(ii) *Diesel.* Lack of cylinder combustion must be detected.

(3) *Oxygen sensors.* If equipped, oxygen sensor deterioration or malfunction resulting in exhaust emissions exceeding 1.5 times the applicable standard or FEL for NMHC, CO or NO_X.

(4) *Evaporative leaks.* If equipped, any vapor leak in the evaporative and/or refueling system (excluding the tubing and connections between the purge valve and the intake manifold) greater than or equal in magnitude to a leak caused by a 0.040 inch diameter orifice; an absence of evaporative purge air flow from the complete evaporative emission control system. On vehicles with fuel tank capacity greater than 25 gallons, the Administrator may, following a request from the manufacturer, revise the size of the orifice to the smallest orifice feasible, based on test data, if the most reliable monitoring method available cannot reliably detect a system leak equal to a 0.040 inch diameter orifice.

(5) *Other emission control systems.* Any deterioration or malfunction occurring in a powertrain system or component directly intended to control emissions, including but not necessarily limited to, the exhaust gas recirculation (EGR) system, if equipped, the secondary air system, if equipped, and the fuel control system, singularly resulting in exhaust emissions exceeding 1.5 times the applicable emission standard or FEL for NMHC, CO, NO_X, or diesel PM. For vehicles equipped with a secondary air system, a functional check, as described in paragraph (b)(6) of this section, may satisfy the requirements of this paragraph provided the manufacturer can demonstrate that deterioration of the flow distribution system is unlikely. This demonstration is subject to Administrator approval and, if the demonstration and associated functional check are approved, the diagnostic system must indicate a malfunction when some degree of secondary airflow is not detectable in the exhaust system during the check. For vehicles equipped with positive crankcase ventilation (PCV), monitoring of the PCV system is not necessary provided the manufacturer can demonstrate to the Administrator's satisfaction that the PCV system is unlikely to fail.

(6) *Other emission-related powertrain components.* Any other deterioration or malfunction occurring in an electronic emission-related powertrain system or component not otherwise described in paragraphs (b)(1) through (b)(5) of this section that either provides input to or

receives commands from the on-board computer and has a measurable impact on emissions; monitoring of components required by this paragraph (b)(6) must be satisfied by employing electrical circuit continuity checks and rationality checks for computer input components (input values within manufacturer specified ranges based on other available operating parameters), and functionality checks for computer output components (proper functional response to computer commands) except that the Administrator may waive such a rationality or functionality check where the manufacturer has demonstrated infeasibility. Malfunctions are defined as a failure of the system or component to meet the electrical circuit continuity checks or the rationality or functionality checks.

(7) *Performance of OBD functions.* Oxygen sensor or any other component deterioration or malfunction which renders that sensor or component incapable of performing its function as part of the OBD system must be detected and identified on vehicles so equipped.

(8) *Hybrid electric vehicles.* For Tier 2 and interim non-Tier 2 hybrid electric vehicles (HEVs) only. Unless added to HEVs in compliance with other requirements of this section, or unless otherwise approved by the Administrator:

(i) The manufacturer must equip each HEV with a maintenance indicator consisting of a light that must activate automatically by illuminating the first time the minimum performance level is observed for each battery system component. Possible battery system components requiring monitoring are: battery water level, temperature control, pressure control, and other parameters critical for determining battery condition.

(ii) The manufacturer must equip ''off-vehicle charge capable HEVs'' with a useful life indicator for the battery system consisting of a light that must illuminate the first time the battery system is unable to achieve an all-electric operating range (starting from a full state-of-charge) which is at least 75 percent of the range determined for the vehicle in the Urban Driving Schedule portion of the All-Electric Range Test (see the California Exhaust Emission Standards and Test Procedures for 2003 and Subsequent Model Zero-Emission Vehicles, and 2001 and Subsequent Model Hybrid Electric Vehicles, in the Passenger Car, Light-Duty Truck and Medium-Duty Vehicle Classes. These requirements are incorporated by reference (see § 86.1).

(iii) The manufacturer must equip each HEV with a separate odometer or other device subject to the approval of the Administrator that can accurately measure the mileage accumulation on the engines used in these vehicles.

(c) *Malfunction indicator light (MIL).* The OBD system must incorporate a malfunction indicator light (MIL) readily visible to the vehicle operator. When illuminated, the MIL must display ''Check Engine,'' ''Service Engine Soon,'' a universally recognizable engine symbol, or a similar phrase or symbol approved by the Administrator. A vehicle should not be equipped with more than one general purpose malfunction indicator light for emission-related problems; separate specific purpose warning lights (e.g. brake system, fasten seat belt, oil pressure, etc.) are permitted. The use of red for the OBD-related malfunction indicator light is prohibited.

(d) *MIL illumination.* (1) The MIL must illuminate and remain illuminated when any of the conditions specified in paragraph (b) of this section are detected and verified, or whenever the engine control enters a default or secondary mode of operation considered abnormal for the given engine operating conditions. The MIL must blink once per second under any period of operation during which engine misfire is occurring and catalyst damage is imminent. If such misfire is detected again during the following driving cycle (*i.e.*, operation consisting of, at a minimum, engine start-up and engine shut-off) or the next driving cycle in which similar conditions are encountered, the MIL must maintain a steady illumination when the misfire is not occurring and then remain illuminated until the MIL extinguishing criteria of this section are satisfied. The MIL must also illuminate when the vehicle's ignition is in the ''key-on'' position before engine starting or cranking and extinguish after engine starting if

no malfunction has previously been detected. If a fuel system or engine misfire malfunction has previously been detected, the MIL may be extinguished if the malfunction does not reoccur during three subsequent sequential trips during which similar conditions are encountered and no new malfunctions have been detected. Similar conditions are defined as engine speed within 375 rpm, engine load within 20 percent, and engine warm-up status equivalent to that under which the malfunction was first detected. If any malfunction other than a fuel system or engine misfire malfunction has been detected, the MIL may be extinguished if the malfunction does not reoccur during three subsequent sequential trips during which the monitoring system responsible for illuminating the MIL functions without detecting the malfunction, and no new malfunctions have been detected. Upon Administrator approval, statistical MIL illumination protocols may be employed, provided they result in comparable timeliness in detecting a malfunction and evaluating system performance, i.e., three to six driving cycles would be considered acceptable.

(2)(i) For interim non-Tier 2 and Tier 2 LDV/LLDTs and HLDT/MDPVs, vehicles produced through the 2007 model year, upon a manufacturer's written request, EPA will consider allowing the use of an on-board diagnostic system during the certification process, that functions properly on low-sulfur gasoline, but indicates sulfur-induced passes when exposed to high sulfur gasoline.

(ii) For interim non-Tier 2 and Tier 2 LDV/LLDTs and HLDT/MDPVs, if vehicles produced through the 2007 model year exhibit illuminations of the emission control diagnostic system malfunction indicator light due to high sulfur gasoline, EPA will consider, upon a manufacturer's written request, allowing modifications to such vehicles on a case-by-case basis so as to eliminate the sulfur induced illumination.

(e) *Storing of computer codes.* The OBD system shall record and store in computer memory diagnostic trouble codes and diagnostic readiness codes indicating the status of the emission control system. These codes shall be available through the standardized data link connector per specifications as referenced in paragraph (h) of this section.

(1) A diagnostic trouble code must be stored for any detected and verified malfunction causing MIL illumination. The stored diagnostic trouble code must identify the malfunctioning system or component as uniquely as possible. At the manufacturer's discretion, a diagnostic trouble code may be stored for conditions not causing MIL illumination. Regardless, a separate code should be stored indicating the expected MIL illumination status (*i.e.*, MIL commanded ''ON,'' MIL commanded ''OFF'').

(2) For a single misfiring cylinder, the diagnostic trouble code(s) must uniquely identify the cylinder, unless the manufacturer submits data and/or engineering evaluations which adequately demonstrate that the misfiring cylinder cannot be reliably identified under certain operating conditions. For diesel vehicles only, the specific cylinder for which combustion cannot be detected need not be identified if new hardware would be required to do so. The diagnostic trouble code must identify multiple misfiring cylinder conditions; under multiple misfire conditions, the misfiring cylinders need not be uniquely identified if a distinct multiple misfire diagnostic trouble code is stored.

(3) The diagnostic system may erase a diagnostic trouble code if the same code is not re-registered in at least 40 engine warm-up cycles, and the malfunction indicator light is not illuminated for that code.

(4) Separate status codes, or readiness codes, must be stored in computer memory to identify correctly functioning emission control systems and those emission control systems which require further vehicle operation to complete proper diagnostic evaluation. A readiness code need not be stored for those monitors that can be considered continuously operating monitors (*e.g.*, misfire monitor, fuel system monitor, etc.). Readiness codes should never be set to ''not ready'' status upon key-on or key-off; intentional setting of readiness codes to ''not ready'' status via service procedures must apply to all

such codes, rather than applying to individual codes. Subject to Administrator approval, if monitoring is disabled for a multiple number of driving cycles (*i.e.*, more than one) due to the continued presence of extreme operating conditions (*e.g.*, ambient temperatures below 40 °F, or altitudes above 8000 feet), readiness for the subject monitoring system may be set to ''ready'' status without monitoring having been completed. Administrator approval shall be based on the conditions for monitoring system disablement, and the number of driving cycles specified without completion of monitoring before readiness is indicated.

(f) *Available diagnostic data.* (1) Upon determination of the first malfunction of any component or system, ''freeze frame'' engine conditions present at the time must be stored in computer memory. Should a subsequent fuel system or misfire malfunction occur, any previously stored freeze frame conditions must be replaced by the fuel system or misfire conditions (whichever occurs first). Stored engine conditions must include, but are not limited to: engine speed, open or closed loop operation, fuel system commands, coolant temperature, calculated load value, fuel pressure, vehicle speed, air flow rate, and intake manifold pressure if the information needed to determine these conditions is available to the computer. For freeze frame storage, the manufacturer must include the most appropriate set of conditions to facilitate effective repairs. If the diagnostic trouble code causing the conditions to be stored is erased in accordance with paragraph (d) of this section, the stored engine conditions may also be erased.

(2) The following data in addition to the required freeze frame information must be made available on demand through the serial port on the standardized data link connector, if the information is available to the on-board computer or can be determined using information available to the on-board computer: Diagnostic trouble codes, engine coolant temperature, fuel control system status (closed loop, open loop, other), fuel trim, ignition timing advance, intake air temperature, manifold air pressure, air flow rate, engine RPM, throttle position sensor output value, secondary air status (upstream, downstream, or atmosphere), calculated load value, vehicle speed, and fuel pressure. The signals must be provided in standard units based on SAE specifications incorporated by reference in paragraph (h) of this section. Actual signals must be clearly identified separately from default value or limp home signals.

(3) For all OBD systems for which specific on-board evaluation tests are conducted (catalyst, oxygen sensor, etc.), the results of the most recent test performed by the vehicle, and the limits to which the system is compared must be available through the standardized data link connector per the appropriate standardized specifications as referenced in paragraph (h) of this section.

(4) Access to the data required to be made available under this section shall be unrestricted and shall not require any access codes or devices that are only available from the manufacturer.

(g) *Exceptions.* The OBD system is not required to evaluate systems or components during malfunction conditions if such evaluation would result in a risk to safety or failure of systems or components. Additionally, the OBD system is not required to evaluate systems or components during operation of a power take-off unit such as a dump bed, snow plow blade, or aerial bucket, etc.

(h) *Reference materials.* The OBD system shall provide for standardized access and conform with the following Society of Automotive Engineers (SAE) standards and/or the following International Standards Organization (ISO) standards. The following documents are incorporated by reference, see § 86.1:

(1) *SAE material.* Copies of these materials may be obtained from the Society of Automotive Engineers, Inc., 400 Commonwealth Drive, Warrendale, PA 15096–0001.

(i) SAE J1850 ''Class B Data Communication Network Interface,'' (Revised, May 2001) shall be used as the on-board to off-board communications protocol. All emission related messages sent to the scan tool over a J1850 data link shall use the Cyclic Redundancy Check

and the three byte header, and shall not use inter-byte separation or checksums.

(ii) Basic diagnostic data (as specified in §§ 86.094–17(e) and (f)) shall be provided in the format and units in SAE J1979 ''E/E Diagnostic Test Modes—Equivalent to ISO/DIS 15031–5:April 30, 2002'', (Revised, April 2002).

(iii) Diagnostic trouble codes shall be consistent with SAE J2012 ''Diagnostic Trouble Code Definitions—Equivalent to ISO/DIS 15031–6: April 30, 2002'', (Revised, April 2002).

(iv) The connection interface between the OBD system and test equipment and diagnostic tools shall meet the functional requirements of SAE J1962 ''Diagnostic Connector—Equivalent to ISO/DIS 15031–3:December 14, 2001'' (Revised, April 2002).

(v) All acronyms, definitions and abbreviations shall be formatted according to SAE J1930 ''Electrical/Electronic Systems Diagnostic Terms, Definitions, Abbreviations, and Acronym'' Equivalent to ISO/TR 15031–2:April 30, 2002'', (Revised, April 2002).

(vi) All equipment used to interface, extract and display OBD-related information shall meet SAE J1978 ''OBD II Scan Tool'' Equivalent to ISO 15031–4:December 14, 2001'', (Revised, April 2002).

(vii) As an alternative to the above standards, heavy-duty vehicles may conform to the specifications of the SAE J1939 series of standards (SAE J1939–11, J1939–13, J1939–21, J1939–31, J1939–71, J1939–73, J1939–81).

(2) ISO materials. Copies of these materials may be obtained from the International Organization for Standardization, Case Postale 56, CH–1211 Geneva 20, Switzerland.

(i) ISO 9141–2 ''Road vehicles—Diagnostic systems—Part 2: CARB requirements for interchange of digital information,'' (February 1, 1994) may be used as an alternative to SAE J1850 as the on-board to off-board communications protocol.

(ii) ISO 14230–4:2000(E) ''Road vehicles—Diagnostic systems—KWP 2000 requirements for Emission-related systems'', (June 1, 2000) may also be used as an alternative to SAE J1850.

(iii) ISO 15765–4.3:2001 ''Road Vehicles-Diagnostics on Controller Area Network (CAN)—Part 4: Requirements for emission-related systems'', (December 14, 2001) may also be used as an alternative to SAE J1850.

(3) Beginning with the 2008 model year and beyond, ISO 15765–4.3: 2001 ''Road Vehicles-Diagnostics on Controller Area Network (CAN)—Part 4: Requirements for emission-related systems'', (December 14, 2001) shall be the only acceptable protocol used for standardized on-board to off-board communications for vehicles below 8500 pounds. For vehicles 8500 to 14000 pounds ISO 15765–4.3 or the SAE J1939 series of standards (SAE J1939–11, J1939–13, J1939–21, J1939–31, J1939–71, J1939–73, J1939–81). All other standardized on-board to off-board communications protocols: SAE J1850 ''Class B Data Communication Network Interface,'' (Revised, May 2001) in paragraph (h)(1)(i), ISO 9141–2 ''Road vehicles—Diagnostic systems—Part 2: CARB requirements for interchange of digital information,'' (February 1, 1994) in (h)(2)(i), and ISO 14230–4 ''Road vehicles—Diagnostic systems—KWP 2000 requirements for Emission-related systems'', (June 1, 2000) in paragraph (h)(2)(ii) of this section will at that time no longer be accepted

(i) *Deficiencies and alternate fueled vehicles.* Upon application by the manufacturer, the Administrator may accept an OBD system as compliant even though specific requirements are not fully met. Such compliances without meeting specific requirements, or deficiencies, will be granted only if compliance would be infeasible or unreasonable considering such factors as, but not limited to: Technical feasibility of the given monitor and lead time and production cycles including phase-in or phase-out of engines or vehicle designs and programmed upgrades of computers. Unmet requirements should not be carried over from the previous model year except where unreasonable hardware or software modifications would be necessary to correct the deficiency, and the manufacturer has demonstrated an acceptable level of effort toward compliance as determined by the Administrator. Furthermore, EPA will not accept any deficiency requests that include the complete lack of a

major diagnostic monitor (''major'' diagnostic monitors being those for exhaust aftertreatment devices, oxygen sensor, engine misfire, evaporative leaks, and diesel EGR, if equipped), with the possible exception of the special provisions for alternate fueled vehicles. For alternate fueled vehicles (*e.g.* natural gas, liquefied petroleum gas, methanol, ethanol), beginning with the model year for which alternate fuel emission standards are applicable and extending through the 2004 model year, manufacturers may request the Administrator to waive specific monitoring requirements of this section for which monitoring may not be reliable with respect to the use of the alternate fuel; manufacturers may request this alternate fuel waiver for heavy-duty vehicles through the 2006 model year. At a minimum, alternate fuel vehicles must be equipped with an OBD system meeting OBD requirements to the extent feasible as approved by the Administrator.

(j) *California OBDII compliance option.* For heavy-duty engines weighing 14,000 pounds GVWR or less, demonstration of compliance with California OBD II requirements (Title 13 California Code of Regulations 1968.2 (13 CCR 1968.2)), as modified, approved and filed on April 21, 2003, shall satisfy the requirements of this section, except that compliance with 13 CCR 1968.2(e)(4.2.2)(C), pertaining to 0.02 inch evaporative leak detection, and 13 CCR 1968.2(d)(1.4), pertaining to tampering protection, are not required to satisfy the requirements of this section. Also, the deficiency provisions of 13 CCR 1968.2(i) do not apply. The deficiency provisions of paragraph (i) of this section and the evaporative leak detection requirement of paragraph (b)(4) of this section apply to manufacturers selecting this paragraph for demonstrating compliance. In addition, demonstration of compliance with 13 CCR 1968.2(e)(16.2.1)(C), to the extent it applies to the verification of proper alignment between the camshaft and crankshaft, applies only to vehicles equipped with variable valve timing.

(k) *Certification.* For test groups required to have an OBD system, certification will not be granted if, for any test vehicle approved by the Administrator in consultation with the manufacturer, the malfunction indicator light does not illuminate under any of the following circumstances, unless the manufacturer can demonstrate that any identified OBD problems discovered during the Administrator's evaluation will be corrected on production vehicles.

(1)(i) *Otto-cycle.* A catalyst is replaced with a deteriorated or defective catalyst, or an electronic simulation of such, resulting in an increase of 1.5 times the NMHC standard or FEL above the NMHC emission level measured using a representative 4000 mile catalyst system.

(ii) *Diesel.* (A) If monitored for emissions performance—a catalyst is replaced with a deteriorated or defective catalyst, or an electronic simulation of such, resulting in exhaust emissions exceeding 1.5 times the applicable standard or FEL for NO_X or PM.

(B) If monitored for performance—a particulate trap is replaced with a trap that has catastrophically failed, or an electronic simulation of such.

(2)(i) *Otto-cycle.* An engine misfire condition is induced resulting in exhaust emissions exceeding 1.5 times the applicable standards or FEL for NMHC, CO or NO_X.

(ii) *Diesel.* An engine misfire condition is induced and is not detected.

(3) If so equipped, any oxygen sensor is replaced with a deteriorated or defective oxygen sensor, or an electronic simulation of such, resulting in exhaust emissions exceeding 1.5 times the applicable standard or FEL for NMHC, CO or NO_X.

(4) If so equipped, a vapor leak is introduced in the evaporative and/or refueling system (excluding the tubing and connections between the purge valve and the intake manifold) greater than or equal in magnitude to a leak caused by a 0.040 inch diameter orifice, or the evaporative purge air flow is blocked or otherwise eliminated from the complete evaporative emission control system.

(5) A malfunction condition is induced in any emission-related powertrain system or component, including but not necessarily limited to, the exhaust gas recirculation (EGR) system, if equipped, the secondary air

system, if equipped, and the fuel control system, singularly resulting in exhaust emissions exceeding 1.5 times the applicable emission standard or FEL for NMHC, CO, NO_X or PM.

(6) A malfunction condition is induced in an electronic emission-related powertrain system or component not otherwise described in this paragraph (k) that either provides input to or receives commands from the on-board computer resulting in a measurable impact on emissions.

(l) *Phase-in for complete heavy-duty vehicles.* Complete heavy-duty vehicles weighing 14,000 pounds GVWR or less that are not Otto-cycle MDPVs must meet the OBD requirements of this section according to the following phase-in schedule, based on the percentage of projected vehicle sales. The 2004 model year requirements in the following phase-in schedule are applicable only to heavy-duty Otto-cycle vehicles where the manufacturer has selected Otto-cycle Option 1 or 2 for alternative 2003 or 2004 compliance according to § 86.004–01(c)(1) or (2). The 2005 through 2007 requirements in the following phase-in schedule apply to all heavy-duty vehicles weighing 14,000 pounds GVWR or less, excluding MDPVs. If the manufacturer has selected Otto-cycle Option 3 it may exempt 2005 model year complete heavy-duty engines and vehicles whose model year commences before July 31, 2004 from the requirements of this section. For the purposes of calculating compliance with the phase-in provisions of this paragraph (l), heavy-duty vehicles subject to the phase-in requirements of this section may be combined with heavy-duty vehicles subject to the phase-in requirements of paragraph § 86.005–17 (k). The phase-in schedule follows:

OBD COMPLIANCE PHASE-IN FOR COMPLETE HEAVY-DUTY VEHICLES WEIGHING 14,000 POUNDS GVWR OR LESS

Model year	Phase-in based on projected sales
2004 MY	Applicable only to Otto-cycle engines complying with Options 1 or 2; 40% compliance; alternative fuel waivers available.
2005 MY	60% compliance; alternative fuel waivers available.
2006 MY	80% compliance; alternative fuel waivers available.
2007 MY	80% compliance; alternative fuel waivers available.

OBD COMPLIANCE PHASE-IN FOR COMPLETE HEAVY-DUTY VEHICLES WEIGHING 14,000 POUNDS GVWR OR LESS—Continued

Model year	Phase-in based on projected sales
2008+ MY	100% compliance.

(m) *Thresholds for California OBD II Compliance Option.* For the purposes of complying with the provisions set forth above in paragraph (j), vehicles certified to Tier 2 standards shall utilize multiplicative factors from the California vehicle type (i.e. LEV II, ULEV II) corresponding to the Tier 2 to which the vehicles are certified. Vehicles certified to Tier 2, Bin 4 emissions standards shall utilize the Tier 2 Bin 4 emission standards and the CARB ULEV II multiplicative factors to determine the appropriate OBD malfunction threshold for all pollutants except NO_X, for which they shall utilize that CARB SULEV II multiplicative factors. Vehicles certified to Tier 2, Bin 3 emissions standards shall utilize the Tier 2 Bin 3 emission standards and the CARB ULEV II multiplicative factors to determine the appropriate OBD malfunction threshold for all pollutants except NO_X, for which they shall utilize that CARB SULEV II multiplicative factors. Vehicles certified to Tier 2, Bin 2 emissions standards shall utilize the Tier 2 Bin 2 emission standards and the CARB SULEV II multiplicative factors to determine the appropriate OBD malfunction threshold. Vehicles certified to Tier 2 Bin 7 or higher shall utilize the CARB LEV II multiplicative factors to determine the appropriate OBD malfunction threshold.

[65 FR 59965, Oct. 6, 2000, as amended at 66 FR 5189, Jan. 18, 2001; 68 FR 35799, June 17, 2003; 70 FR 75410, Dec. 20, 2005]

§ 86.1807–01 Vehicle labeling.

(a) The manufacturer of any motor vehicle subject to the applicable emission standards of this subpart, shall, at the time of manufacture, affix a permanent legible label, of the type and in the manner described in this section, containing the information prescribed in this section, to all production models of such vehicles available for sale to the public and covered by a Certificate of Conformity under § 86.1848–01.

(1) A permanent, legible label shall be affixed in a readily visible position in the engine compartment.

(2) The label shall be affixed by the vehicle manufacturer who has been issued the Certificate of Conformity for such vehicle, in such manner that it cannot be removed without destroying or defacing the label. The label shall not be affixed to any equipment which is easily detached from such vehicle.

(3) The label shall contain the following information lettered in the English language in block letters and numerals, which shall be of a color that contrasts with the background of the label:

(i) The label heading: Vehicle Emission Control Information;

(ii) Full corporate name and trademark of manufacturer;

(iii) Engine displacement (in cubic inches or liters), test group identification and evaporative/refueling family identification;

(iv) [Reserved]

(v) An unconditional statement of compliance with the appropriate model year U.S. EPA regulations which apply to light-duty vehicles, light-duty trucks, medium-duty passenger vehicles, or complete heavy-duty vehicles;

(vi) The exhaust emission standards (or FEL, as applicable) to which the test group is certified, and for test groups having different in-use standards, the corresponding exhaust emission standards that the test group must meet in use. In lieu of this requirement, manufacturers may use the standardized test group name designated by EPA;

(vii) [Reserved]

(viii) Vehicles granted final admission under 40 CFR 85.1505 must comply with the labeling requirements contained in 40 CFR 85.1510;

(ix) (A) For vehicles exempted from compliance with certain revised performance warranty procedures, as specified in § 86.1829–01(b)(4)(iii), a statement indicating the specific performance warranty test(s) of 40 CFR part 85, subpart W, not to be performed.

(B) For vehicles exempted from compliance with all revised performance warranty procedures, as specified in § 86.1829–01(b)(4)(iv), a statement indicating:

(*1*) That none of the performance warranty tests of 40 CFR part 85, subpart W, is to be performed; and

(*2*) The name of the Administrator-approved alternative test procedure to be performed;

(x) For vehicles designed to be capable of operating on fuels other than gasoline or diesel, the statement ''This vehicle is certified to operate on [specify fuel(s)]''.

(b) The provisions of this section shall not prevent a manufacturer from also reciting on the label that such vehicle (or engine) conforms to any applicable state emission standards for new motor vehicles (or new motor vehicle engines) or any other information that such manufacturer deems necessary for, or useful to, the proper operation and satisfactory maintenance of the vehicle (or engine).

(c)(1) The manufacturer of any light-duty vehicle, light-duty truck, medium-duty passenger vehicle, or heavy-duty vehicle subject to the emission standards of this subpart shall, in addition and subsequent to setting forth those statements on the label required by the Department of Transportation (DOT) pursuant to 49 CFR 567.4 set forth on the DOT label or on an additional label located in proximity to the DOT label and affixed as described in 49 CFR 567.4(b), the following information in the English language, lettered in block letters and numbers not less than three thirty-seconds of an inch high, of a color that contrasts with the background of the label:

(i) The heading: ''Vehicle Emission Control Information.''

(ii)(A) For light-duty vehicles, the statement: ''This Vehicle Conforms to U.S. EPA Regulations Applicable to XXX-Fueled 20XX Model Year New Motor Vehicles.''

(B) For light-duty trucks, the statement: ''This Vehicle Conforms to U.S. EPA Regulations Applicable to XXX-Fueled 20XX Model Year New Light-Duty Trucks.''

(C) For medium-duty passenger vehicles, the statement: ''This Vehicle Conforms to U.S. EPA Regulations Applicable to XXX-fueled 20XX Model Year New Medium-Duty Passenger Vehicles.''

(D) For heavy-duty vehicles, the statement: ''This Vehicle Conforms to U.S. EPA Regulations Applicable to XXX-fueled 20XX Model Year Chassis-Certified New Heavy-Duty Vehicles.''

(iii) [Reserved]

(2)—(3) [Reserved]

(d)(1) Incomplete light-duty trucks shall have the following prominent statement printed on the label required by paragraph (a)(3)(v) of this section: ''This vehicle conforms to U.S. EPA regulations applicable to 20xx Model year Light-Duty Trucks under the special provisions of 40 CFR 86.1801–01(c)(1) when it does not exceed XXX pounds in curb weight, XXX pounds in gross vehicle weight rating, and XXX square feet in frontal area.''

(2) Incomplete heavy-duty vehicles optionally certified in accordance with the provisions for complete heavy-duty vehicles under the special provisions of § 86.1801–01(c)(2) shall have the following prominent statement printed on the label required by paragraph (a)(3)(v) of this section: ''This vehicle conforms to U.S. EPA regulations applicable to 20xx Model year Complete Heavy-Duty Vehicles under the special provisions of 40 CFR 86.1801–01(c)(2) when it does not exceed XXX pounds in curb weight, XXX pounds in gross vehicle weight rating, and XXX square feet in frontal area.''

(e) The manufacturer of any incomplete light-duty vehicle, light-duty truck, or heavy-duty vehicle shall notify the purchaser of such vehicle of any curb weight, frontal area, or gross vehicle weight rating limitations affecting the emission certificate applicable to that vehicle. This notification shall be transmitted in a manner consistent with National Highway Traffic Safety Administration safety notification requirements published in 49 CFR part 568.

(f) All light-duty vehicles, light-duty trucks, medium-duty passenger vehicles, and complete heavy-duty vehicles shall comply with SAE Recommended Practices J1877 ''Recommended Practice for Bar-Coded Vehicle Identification Number Label,'' (July 1994). SAE J1877 is incorporated by reference (see § 86.1).

(g) The Administrator may approve in advance other label content and formats provided the alternative label contains information consistent with this section.

[64 FR 23925, May 4, 1999, as amended at 65 FR 6853, Feb. 10, 2000; 65 FR 59969, Oct. 6, 2000; 70 FR 72928, Dec. 8, 2005]

§ 86.1807–07 Vehicle labeling.

Section 86.1807–07 includes text that specifies requirements that differ from those specified in § 86.1807–01. Where a paragraph in § 86.1807–01 is identical and applicable to § 86.1807–07, this may be indicated by specifying the corresponding paragraph and the statement ''[Reserved]. For guidance see § 86.1807–01.''.

(a) through (g) [Reserved]. For guidance see § 86.1807–01.

(h) Vehicles powered by model year 2007 and later diesel-fueled engines and other diesel vehicles certified using a test fuel with 15 ppm sulfur or less, must include permanent readily visible labels on the dashboard (or instrument panel) and near all fuel inlets that state ''Use Ultra Low Sulfur Diesel Fuel Only'' or ''Ultra Low Sulfur Diesel Fuel Only''.

[66 FR 5189, Jan. 18, 2001, as amended at 70 FR 40442, July 13, 2005]

§ 86.1808–01 Maintenance instructions.

(a) The manufacturer shall furnish or cause to be furnished to the purchaser of each new motor vehicle subject to the standards prescribed in this subpart, as applicable, written instructions for the proper maintenance and use of the vehicle, by the purchaser consistent with the provisions of § 86.1834–01, which establishes what scheduled maintenance the Administrator approves as being reasonable and necessary.

(1) The maintenance instructions required by this section shall be in clear, and to the extent practicable, nontechnical language.

(2) The maintenance instructions required by this section shall contain a general description of the documentation which the manufacturer will require from the ultimate purchaser or any subsequent purchaser as evidence of compliance with the instructions.

(b) Instructions provided to purchasers under paragraph (a) of this section shall specify the performance of all scheduled maintenance performed by the manufacturer on certification durability vehicles and, in cases where the manufacturer performs less maintenance on certification durability data vehicles than the allowed limit, may specify the performance of any scheduled maintenance allowed under § 86.1834–01.

(c) Scheduled emission-related maintenance in addition to that performed under § 86.1834–01 may only be recommended to offset the effects of abnormal in-use operating conditions, except as provided in paragraph (d) of this section. The manufacturer shall be required to demonstrate, subject to the approval of the Administrator, that such maintenance is reasonable and technologically necessary to assure the proper functioning of the emission control system. Such additional recommended maintenance shall be clearly differentiated, in a form approved by the Administrator, from that approved under § 86.1834–01.

(d) Inspections of emission-related parts or systems with instructions to replace, repair, clean, or adjust the parts or systems if necessary, are not considered to be items of scheduled maintenance which insure the proper functioning of the emission control system. Such inspections, and any recommended maintenance beyond that approved by the Administrator as reasonable and necessary under paragraphs (a), (b), and (c) of this section, may be included in the written instructions furnished to vehicle owners under paragraph (a) of this section, provided that such instructions clearly state, in a form approved by the Administrator, that the owner need not perform such inspections or recommended maintenance in order to maintain the emission warranty or manufacturer recall liability.

(e) If the vehicle has been granted an alternative useful life period under the provisions of § 86.1805–01(c), the manufacturer may choose to include in such instructions an explanation of the distinction between the alternative useful life specified on the label, and the emissions defect and emissions performance warranty period. The explanation must clearly state that the useful life period specified on the label represents the average period of use up to retirement or rebuild for the test group represented by the engine used in the vehicle. An explanation of how the actual useful lives of engines used in various applications are expected to differ from the average useful life may be included. The explanation(s) shall be in clear, non-technical language that is understandable to the ultimate purchaser.

(f) Emission control diagnostic service information:

(1) Manufacturers are subject to the provisions of this paragraph (f) beginning in the 2001 model year for manufacturers of light-duty vehicles and light-duty trucks, and beginning in the 2005 model year for manufacturers of heavy-duty vehicles and heavy-duty engines weighing 14,000 pounds gross vehicle weight (GVW) and less that are subject to the OBD requirements of this part.

(2) *General requirements.* (i) Manufacturers shall furnish or cause to be furnished to any person engaged in the repairing or servicing of motor vehicles or motor vehicle engines, or the Administrator upon request, any and all information needed to make use of the on-board diagnostic system and such other information, including instructions for making emission-related diagnoses and repairs, including but not limited to service manuals, technical service bulletins, recall service information, bi-directional control information, and training information, unless such information is protected by section 208(c) of the Act as a trade secret. No such information may be withheld under section 208(c) of the Act if that information is provided (directly or indirectly) by the manufacturer to franchised dealers or other persons engaged in the repair, diagnosing, or servicing of motor vehicles or motor vehicle engines.

(ii) *Definitions.* The following definitions apply for this paragraph (f):

(A) Aftermarket service provider means any individual or business engaged in the diagnosis, service, and repair of a motor vehicle or engine, who

is not directly affiliated with a manufacturer or manufacturer-franchised dealership.

(B) Bi-directional control means the capability of a diagnostic tool to send messages on the data bus that temporarily overrides the module's control over a sensor or actuator and gives control to the diagnostic tool operator. Bi-directional controls do not create permanent changes to engine or component calibrations.

(C) Data stream information means information (*i.e.*, messages and parameters) originated within the vehicle by a module or intelligent sensors (*i.e.*, a sensor that contains and is controlled by its own module) and transmitted between a network of modules and/or intelligent sensors connected in parallel with either one or more communication wires. The information is broadcast over the communication wires for use by the OBD system to gather information on emissions-related components or systems and from other vehicle modules that may impact emissions, including but not limited to systems such as chassis or transmission. For the purposes of this section, data stream information does not include engine calibration related information, or any data stream information from systems or modules that do not impact emissions.

(D) Emissions-related information means any information related to the diagnosis, service, and repair of emissions-related components. Emissions-related information includes, but is not limited to, information regarding any system, component or part of a vehicle that controls emissions and any system, component and/or part associated with the powertrain system, including, but not limited to:

(*1*) The engine, the fuel system and ignition system;

(*2*) Information for any system, component or part that is likely to impact emissions, such as transmission systems, and any other information specified by the Administrator to be relevant to the diagnosis and repair of an emissions-related problem; and

(*3*) Any other information specified by the Administrator to be relevant for the diagnosis and repair of an emissions-related failure found through the inspection and maintenance program after such finding has been communicated to the affected manufacturer(s).

(E) Emissions-related training information means any information related to training or instruction for the purpose of the diagnosis, service, and repair of emissions-related components.

(F) Enhanced service and repair information means information which is specific for an original equipment manufacturer's brand of tools and equipment. This includes computer or anti-theft system initialization information necessary for the completion of any emissions-related repair on motor vehicles that employ integral vehicle security systems.

(G) Equipment and tool company means a registered automotive equipment or software company either public or private that is engaged in, or plans to engage in, the manufacture of automotive scan tool reprogramming equipment or software.

(H) Generic service and repair information means information which is not specific for an original equipment manufacturer's brand of tools and equipment.

(I) Indirect information means any information that is not specifically contained in the service literature, but is contained in items such as tools or equipment provided to franchised dealers (or others). This includes computer or anti-theft system initialization information necessary for the completion of any emissions-related repair on motor vehicles that employ integral vehicle security systems.

(J) Intermediary means any individual or entity, other than an original equipment manufacturer, which provides service or equipment to aftermarket service providers.

(K) Manufacturer-franchised dealership means any service provider with which a manufacturer has a direct business relationship.

(L) Third-party information provider means any individual or entity, other than an original equipment manufacturer, who consolidates manufacturer service information and makes this information available to aftermarket service providers.

(M) Third-party training provider means any individual or entity, other than an original equipment manufacturer who develops and/or delivers instructional and educational material for automotive training courses.

(3) *Information dissemination.* By December 24, 2003, each manufacturer shall provide or cause to be provided to the persons specified in paragraph (f)(2)(i) of this section and to any other interested parties a manufacturer-specific World Wide Web site containing the information specified in paragraph (f)(2)(i) of this section for 2001 and later model year vehicles which have been offered for sale; this requirement does not apply to indirect information, including the information specified in paragraphs (f)(12) through (f)(16) of this section. Upon request and approval of the Administrator, manufacturers who can demonstrate significant hardship in complying with this provision within four months after the effective date may request an additional six months lead time to meet this requirement. Each manufacturer Web site shall:

(i) Provide access in full-text to all of the information specified in paragraph (f)(5) of this section.

(ii) Be updated at the same time as manufacturer-franchised dealership World Wide Web sites;

(iii) Provide users with a description of the minimum computer hardware and software needed by the user to access that manufacturer's information (*e.g.*, computer processor speed and operating system software). This description shall appear when users first logon to the home page of the manufacturer's Web site.

(iv) Provide Short-Term (24 to 72 hours), Mid-Term (30-day period), and Long-Term (365-day period) Web site subscription options to any person specified in paragraph (f)(2)(i) of this section whereby the user will be able to access the site, search for the information, and purchase, view and print the information at a fair and reasonable cost as specified in paragraph (f)(7) of this section for each of the options. In addition, for each of the subscription options, manufacturers are required to make their entire site accessible for the respective period of time and price. In other words, a manufacturer may not limit any or all of the subscription options to just one make or one model.

(v) Allow the user to search the manufacturer Web site by various topics including but not limited to model, model year, key words or phrases, etc., while allowing ready identification of the latest vehicle calibration. Manufacturers who do not use model year to classify their vehicles in their service information may use an alternate vehicle delineation such as body series. Any manufacturer utilizing this flexibility shall create a cross-reference to the corresponding model year and provide this cross-reference on the manufacturer Web site home page.

(vi) Provide accessibility using common, readily available software and shall not require the use of software, hardware, viewers, or browsers that are not readily available to the general public. Manufacturers shall also provide hyperlinks to any plug-ins, viewers or browsers (*e.g.* Adobe Acrobat or Netscape) needed to access the manufacturer Web site.

(vii) Allow simple hyper-linking to the manufacturer Web site from government Web sites and automotive-related Web sites.

(viii) Allow access to the manufacturer Web sites with no limits on the modem speed by which aftermarket service providers or other interested parties can connect to the manufacturer Web site.

(ix) Possess sufficient server capacity to allow ready access by all users and have sufficient capacity to assure that all users may obtain needed information without undue delay.

(x) Correct or delete broken Web links on a weekly basis.

(xi) Allow for Web site navigation that does not require a user to return to the manufacturer home page or a search engine in order to access a different portion of the site.

(xii) Allow all users to print out any and all of the materials required to be made available on the manufacturers Web site, including the ability to print it at the users location.

(4) *Small volume provisions for information dissemination.* (i) Manufacturers with annual sales of less than 5,000 vehicles shall have until June 28, 2004 to

launch their individual Web sites as required by paragraph (f)(3) of this section.

(ii) Manufacturers with annual sales of less than 1,000 vehicles may, in lieu of meeting the requirement of paragraph (f)(3) of this section, request the Administrator to approve an alternative method by which the required emissions-related information can be obtained by the persons specified in paragraph (f)(2)(i) of this section.

(5) *Required information.* All information relevant to the diagnosis and completion of emissions-related repairs shall be posted on manufacturer Web sites. This excludes indirect information specified in paragraphs (f)(6) and (f)(12) through (f)(16) of this section. To the extent that this information does not already exist in some form for their manufacturer-franchised dealerships, manufacturers are required to develop and make available the information required by this section to both their manufacturer-franchised dealerships and the aftermarket. The required information includes, but is not limited to:

(i) Manuals, including subsystem and component manuals developed by a manufacturer's third party supplier that are made available to manufacturer-franchised dealerships, technical service bulletins (TSBs), recall service information, diagrams, charts, and training materials. Manuals and other such service information from third party suppliers are not required to be made available in full-text on manufacturer Web sites as described in paragraph (f)(3) of this section. Rather, manufacturers must make available on the manufacturer Web site as required by paragraph (f)(3) of this section an index of the relevant information and instructions on how to order such third party information. In the alternative, a manufacturer can create a link from its Web site to the Web site(s) of the third party supplier.

(ii) OBD system information which includes, but is not limited to, the following:

(A) A general description of the operation of each monitor, including a description of the parameter that is being monitored;

(B) A listing of all typical OBD diagnostic trouble codes associated with each monitor;

(C) A description of the typical enabling conditions (either generic or monitor-specific) for each monitor (if equipped) to execute during vehicle operation, including, but not limited to, minimum and maximum intake air and engine coolant temperature, vehicle speed range, and time after engine startup. In addition, manufacturers shall list all monitor-specific OBD drive cycle information for all major OBD monitors as equipped including, but not limited to, catalyst, catalyst heater, oxygen sensor, oxygen sensor heater, evaporative system, exhaust gas re-circulation (EGR), secondary air, and air conditioning system. Additionally, for diesel vehicles under 14,000 pounds GVWR which also perform misfire, fuel system and comprehensive component monitoring under specific driving conditions (*i.e.*, non-continuous monitoring; as opposed to spark ignition engines that monitor these systems under all conditions or continuous monitoring), the manufacturer shall make available monitor-specific drive cycles. Any manufacturer who develops generic drive cycles, either in addition to, or instead of, monitor-specific drive cycles shall also make these available in full-text on manufacturer Web sites;

(D) A listing of each monitor sequence, execution frequency and typical duration;

(E) A listing of typical malfunction thresholds for each monitor;

(F) For OBD parameters for specific vehicles that deviate from the typical parameters, the OBD description shall indicate the deviation and provide a separate listing of the typical values for those vehicles;

(G) Identification and scaling information necessary to interpret and understand data available to a generic scan tool through ''mode 6'', pursuant to Society of Automotive Engineers SAE J1979, ''EE Diagnostic Test Modes''(Incorporated by reference, *see* § 86.1).

(H) Algorithms, look-up tables, or any values associated with look-up tables are not required to be made available.

(iii) Any information regarding any system, component, or part of a vehicle monitored by the OBD system that could in a failure mode cause the OBD system to illuminate the malfunction indicator light (MIL);

(iv) Any information on other systems that can effect the emission system within a multiplexed system (including how information is sent between emission-related system modules and other modules on a multiplexed bus);

(v) Manufacturer-specific emissions-related diagnostic trouble codes (DTCs) and any related service bulletins, trouble shooting guides, and/or repair procedures associated with these manufacturer-specific DTCs; and

(vi) Information regarding how to obtain the information needed to perform reinitialization of any vehicle computer or anti-theft system following an emissions-related repair.

(6) *Anti-theft system initialization information.* Computer or anti-theft system initialization information and/or related tools necessary for the proper installation of on-board computers or necessary for the completion of any emissions-related repair on motor vehicles that employ integral vehicle security systems or the repair or replacement of any other emission-related part shall be made available at a fair and reasonable cost to the persons specified in paragraph (f)(2)(i) of this section.

(i) Except as provided under paragraph (f)(6)(ii) of this section, manufacturers must make this information available to persons specified in paragraph (f)(2)(i) of this section, such that such persons will not need any special tools or manufacturer-specific scan tools to perform the initialization. Manufacturers may make such information available through, for example, generic aftermarket tools, a pass-through device, or inexpensive manufacturer specific cables.

(ii) A manufacturer may request Administrator approval for an alternative means to re-initialize vehicles for some or all model year vehicles through the 2007 model year by 1 month following the effective date of the final rule. The Administrator shall approve the request only after the following conditions have been met:

(A) The manufacturer must demonstrate that the availability of such information to aftermarket service providers would significantly increase the risk of vehicle theft.

(B) The manufacturer must make available a reasonable alternative means to install or repair computers, or to otherwise repair or replace an emission-related part.

(C) Any alternative means proposed by a manufacturer cannot require aftermarket technicians to use a manufacturer-franchised dealership to obtain information or special tools to re-initialize the anti-theft system. All information must come directly from the manufacturer or a single manufacturer-specified designee.

(D) Any alternative means proposed by and manufacturer must be available to aftermarket technicians at a fair and reasonable price.

(E) Any alternative must be available to aftermarket technicians within twenty-four hours of the initial request.

(F) Any alternative must not require the purchase of a special tool or tools, including manufacturer-specific tools, to complete this repair. Alternatives may include lease of such tools, but only for appropriately minimal cost.

(G) In lieu of leasing their manufacturer-specific tool to meet this requirement, a manufacturer may also release the necessary information to equipment and tool manufacturers for incorporation into aftermarket scan tools. Any manufacturer choosing this option must release the information to equipment and tool manufacturers within 60 days of Administrator approval. Manufacturers may also comply with this requirement using SAE J2534 for some or all model years through model year 2007.

(7) *Cost of required information.* (i) All information required to be made available by this section, shall be made available at a fair and reasonable price. In determining whether a price is fair and reasonable, consideration may be given to relevant factors, including, but not limited to, the following:

(A) The net cost to the manufacturer-franchised dealerships for similar

information obtained from manufacturers, less any discounts, rebates, or other incentive programs.

(B) The cost to the manufacturer for preparing and distributing the information, excluding any research and development costs incurred in designing and implementing, upgrading or altering the onboard computer and its software or any other vehicle part or component. Amortized capital costs for the preparation and distribution of the information may be included.

(C) The price charged by other manufacturers for similar information.

(D) The price charged by manufacturers for similar information prior to the launch of manufacturer Web sites.

(E) The ability of aftermarket technicians or shops to afford the information.

(F) The means by which the information is distributed.

(G) The extent to which the information is used, which includes the number of users, and frequency, duration, and volume of use.

(H) Inflation.

(ii) By August 26, 2003, each manufacturer shall submit to the Administrator a request for approval of their pricing structure for their Web sites and amounts to be charged for the information required to be made available under paragraphs (f)(3) and (f)(5) of this section. Subsequent to the approval of the manufacturer Web site pricing structure, each manufacturer shall notify the Administrator upon the increase in price of any one or all of the subscription options of 20 percent or more above the previously approved price, taking inflation into account.

(A) The manufacturer shall submit a request to the Administrator that sets forth a detailed description of the pricing structure and amounts, and support for the position that the pricing structure and amounts are fair and reasonable by addressing, at a minimum, each of the factors specified in paragraph (f)(7)(i) of this section.

(B) The Administrator will act upon on the request within 180 days following receipt of a complete request or following receipt of any additional information requested by the Administrator.

(C) The Administrator may decide not to approve, or to withdraw approval for a manufacturer's pricing structure and amounts based on a conclusion that this pricing structure and/or amounts are not, or are no longer, fair and reasonable, by sending written notice to the manufacturer explaining the basis for this decision.

(D) In the case of a decision by the Administrator not to approve or to withdraw approval, the manufacturer shall within three months following notice of this decision, obtain Administrator approval for a revised pricing structure and amounts by following the approval process described in this paragraph (f)(7)(ii).

(8) *Unavailable information*. Any information which is not provided at a fair and reasonable price shall be considered unavailable, in violation of these regulations and section 202(m)(5) of the Clean Air Act.

(9) *Third-party information providers*. By December 24, 2003, manufacturers shall, for model year 2004 and later vehicles and engines, make available to third-party information providers as defined in paragraph (f)(2)(ii) of this section with whom they engage in licensing or business arrangements;

(i) The required emissions-related information as specified in paragraph (f)(5) of this section either:

(A) Directly in electronic format such as diskette or CD-ROM using nonproprietary software, in English; or

(B) Indirectly via a Web site other than that required by paragraph (f)(3) of this section;

(ii) For any manufacturer who utilizes an automated process in their manufacturer-specific scan tool for diagnostic fault trees, the data schema, detail specifications, including category types/codes and vehicle codes, and data format/content structure of the diagnostic trouble trees.

(iii) Manufacturers can satisfy the requirement of paragraph (f)(9)(ii) of this section by making available diagnostic trouble trees on their manufacturer Web sites in full-text.

(iv) Manufacturers are not responsible for the accuracy of the information distributed by third parties. However, where manufacturers charge information intermediaries for information, whether through licensing agreements or other arrangements, manufacturers are responsible for inaccuracies contained in the information they provide to third-party information providers.

(10) *Required emissions-related training information*. By December 24, 2003, for emissions-related training information, manufacturers shall:

(i) Video tape or otherwise duplicate and make available for sale on manufacturer Web sites within 30 days after transmission any emissions-related training courses provided to manufacturer-franchised dealerships via the Internet or satellite transmission;

(ii) Provide on the manufacturer Web site an index of all emissions-related training information available for purchase by aftermarket service providers for 1994 and newer vehicles. For model years subsequent to 2003, the required information must be made available for purchase within 3 months of model introduction and then must be made available at the same time it is made available to manufacturer-franchised dealerships, whichever is earlier. The index shall describe the title of the course or instructional session, the cost of the video tape or duplicate, and information on how to order the item(s) from the manufacturer Web site. All of the items available must be shipped within 24 hours of the order being placed and are to be made available at a fair and reasonable price as described in section (f)(7) of this section. Manufacturers unable to meet the 24 hour shipping requirement under circumstances where orders exceed supply and additional time is needed by the distributor to reproduce the item being ordered, may exceed the 24 hour shipping requirement, but in no instance can take longer than 14 days to ship the item.

(iii) Provide access to third-party training providers as defined in paragraph (f)(2)(ii) of this section all emission-related training courses transmitted via satellite or Internet offered to their manufacturer-franchised dealerships. Manufacturers may not charge unreasonable up-front fees to third-party training providers for this access, but may require a royalty, percentage, or other arranged fee based on per-use enrollment/subscription basis. Manufacturers may take reasonable steps to protect any copyrighted information and are not required to provide this information to parties that do not agree to such steps.

(11) *Timeliness and maintenance of information dissemination*. (i) General requirements. Subsequent to the initial launch of the manufacturer's Web site, manufacturers must make the information required under paragraph (f)(5) of this section available on their Web site within six months of model introduction, or at the same time it is made available to manufacturer-franchised dealerships, whichever is earlier. After this six-month period, the information must be available and updated on the manufacturer Web site at the same time that the updated information is made available to manufacturer-franchised dealerships, except as otherwise specified in this section.

(ii) *Archived information*. Manufacturers must maintain the required information on their Web sites in full-text as defined in paragraph (f)(5) of this section for a minimum of 15 years after model introduction. Subsequent to this fifteen year period, manufacturers may archive the information in the manufacturer's format of choice and provide an index of the archived information on the manufacturer Web site and how it can be obtained by interested parties. Manufacturers shall index their available information with a title that adequately describes the contents of the document to which it refers. Manufacturers may allow for the ordering of information directly from their Web site, or from a Web site hyperlinked to the manufacturer Web site. In the alternative, manufacturers shall list a phone number and address where aftermarket service providers can call or write to obtain the desired information. Manufacturers must also provide the price of each item listed, as well as the price of items ordered on a subscription basis. To the extent that any additional information is added or

changed for these model years, manufacturers shall update the index as appropriate. Manufacturers will be responsible for ensuring that all information, including information that is distributed through information distributors, is provided within one regular business day of receiving the order. Items that are less than 20 pages (*e.g.* technical service bulletins) shall be faxed, if requested, to the requestor and distributors are required to deliver the information overnight if requested and paid for by the ordering party. Archived information must be made available on demand and at a fair and reasonable price.

(12) *Reprogramming information.* (i) Manufacturers shall make available to the persons specified in paragraph (f)(2)(i) of this section all emissions-related recalibration or reprogramming events (including driveability reprogramming events that may affect emissions) in the format of its choice at the same time they are made available to manufacturer-franchised dealerships. This requirement takes effect on September 25, 2003, and within 3 months of model introduction for all new model years.

(ii) Manufacturers shall provide persons specified in paragraph (f)(2)(i) of this section with an efficient and cost-effective method for identifying whether the calibrations on vehicles are the latest to be issued. This requirement takes effect on September 25, 2003, and within 3 months of model introduction for all new model years.

(iii) For all 2004 and later OBD vehicles equipped with reprogramming capability, manufacturers shall comply with SAE J2534 (Incorporated by reference, see § 86.1). Any manufacturer who cannot comply with SAE J2534 in model year 2004 may request one year additional lead time from the Administrator.

(iv) For model years 2004 and later, manufacturers shall make available to aftermarket service providers the necessary manufacturer-specific software applications and calibrations needed to initiate pass-through reprogramming. This software shall be able to run on a standard personal computer that utilizes standard operating systems as specified in SAE J2534 (Incorporated by reference, see § 86.1).

(v) For model years prior to 2004, manufacturers may use SAE J2534 as described above, provided they make available to the aftermarket any additional required hardware (*i.e.*, cables). Manufacturers may not require the purchase or use of a manufacturer-specific scan tool to receive or use this additional hardware. Manufacturers must also make available the necessary manufacturer-specific software applications and calibrations needed to initiate pass-through reprogramming. Manufacturers must also make available to equipment and tool companies any information needed to develop aftermarket equivalents of the manufacturer-specific hardware.

(vi) Manufacturers may take any reasonable business precautions necessary to protect proprietary business information and are not required to provide this information to any party that does not agree to these reasonable business precautions. The requirement to make hardware available and to release the information to equipment and tool companies takes effect on September 25, 2003, and within 3 months of model introduction for all new model years.

(vii) Manufacturers who cannot comply with paragraphs (f)(12)(v) and (f)(12)(vi) of this section shall make available to equipment and tool companies by September 25, 2003 the following information necessary for reprogramming the ECU:

(A) The physical hardware requirements for reprogramming events or tools (*e.g.* system voltage requirements, cable terminals/pins, connections such as RS232 or USB, wires, etc.).

(B) ECU data communication (*e.g.* serial data protocols, transmission speed or baud rate, bit timing requirements, etc.).

(C) Information on the application physical interface (API) or layers (descriptions for procedures such as connection, initialization, performing and verifying programming/download, and termination).

(D) Vehicle application information or any other related service information such as special pins and voltages

for reprogramming events or additional vehicle connectors that require enablement and specifications for the enablement.

(E) Information that describes what interfaces or combinations of interfaces are used to deliver calibrations from database media (*e.g.* PC using CDROM to the reprogramming device *e.g.* scan tool or black box).

(viii) A manufacturer can propose an alternative to the requirements of paragraph (f)(12)(vii) of this section for how aftermarket service providers can reprogram an ECU. The Administrator will approve this alternative if the manufacturer demonstrates all of the following:

(A) That it cannot comply with paragraph (f)(12)(v) of this section for the vehicles subject to the alternative plan;

(B) That a very small percentage of its vehicles in model years prior to 2004 cannot be reprogrammed with the provisions described in paragraph (f)(12)(v) of this section, or that releasing the information to tool companies would likely not result in this information being incorporated into aftermarket tools; and

(C) That aftermarket service providers will be able to reprogram promptly at a reasonable cost.

(ix) In meeting the requirements of paragraphs (f)(12)(v) through (f)(12)(vii) of this section, manufacturers may take any reasonable business precautions necessary to protect proprietary business information and are not required to provide this information to any party that does not agree to these reasonable business precautions.

(13) *Generic and enhanced information for scan tools.* By September 25, 2003, manufacturers shall make available to equipment and tool companies all generic and enhanced service information including bi-directional control and data stream information as defined in paragraph (f)(2)(ii) of this section. This requirement applies for 2001 and later model year vehicles.

(i) The information required by this paragraph (f)(13) of this section shall be provided electronically using common document formats to equipment and tool companies with whom they have appropriate licensing, contractual, and/or confidentiality arrangements. To the extent that a central repository for this information (*e.g.* the TEK-NET library developed by the Equipment and Tool Institute) is used to warehouse this information, the Administrator shall have free unrestricted access. In addition, information required by paragraph (f)(13) of this section shall be made available to equipment and tool companies who are not otherwise members of any central repository and shall have access if the non-members have arranged for the appropriate licensing, contractual and/or confidentiality arrangements with the manufacturer and/or a central repository.

(ii) In addition to the generic and enhanced information defined in paragraph (f)(2)(ii) of this section, manufacturers shall also make available the following information necessary for developing generic diagnostic scan tools:

(A) The physical hardware requirements for data communication (*e.g.* system voltage requirements, cable terminals/pins, connections such as RS232 or USB, wires, etc.)

(B) ECU data communication (*e.g.* serial data protocols, transmission speed or baud rate, bit timing requirements, etc.),

(C) Information on the application physical interface (API) or layers. (*i.e.*, processing algorithms or software design descriptions for procedures such as connection, initialization, and termination),

(D) Vehicle application information or any other related service information such as special pins and voltages or additional vehicle connectors that require enablement and specifications for the enablement.

(iii) Any manufacturer who utilizes an automated process in its manufacturer-specific scan tool for diagnostic fault trees shall make available to equipment and tool companies the data schema, detail specifications, including category types/codes and vehicle codes, and data format/content structure of the diagnostic trouble trees.

(iv) Manufacturers can satisfy the requirement of this paragraph (f)(13)(iii) by making available diagnostic trouble trees on their manufacturer Web sites in full-text.

(14) *Availability of manufacturer-specific scan tools.* Manufacturers shall make available for sale to the persons specified in paragraph (f)(2)(i) of this section their own manufacturer-specific diagnostic tools at a fair and reasonable cost. These tools shall also be made available in a timely fashion either through the manufacturer Web site or through a manufacturer-designated intermediary. Manufacturers who develop different versions of one or more of their diagnostic tools that are used in whole or in part for emission-related diagnosis and repair shall insure that all emission-related diagnosis and repair information is available for sale to the aftermarket at a fair and reasonable cost. Manufacturers shall provide technical support to aftermarket service providers for the tools described in this section, either themselves or through a third party of its choice. Factors for determining fair and reasonable cost include, but are not limited to:

(i) The net cost to the manufacturer's franchised dealerships for similar tools obtained from manufacturers, less any discounts, rebates, or other incentive programs;

(ii) The cost to the manufacturer for preparing and distributing the tools, excluding any research and development costs;

(iii) The price charged by other manufacturers of similar sizes for similar tools;

(iv) The capabilities and functionality of the manufacturer tool;

(v) The means by which the tools are distributed;

(vi) Inflation;

(vii) The ability of aftermarket technicians and shops to afford the tools.

(15) *Changing content of manufacturer-specific scan tools.* Manufacturers who opt to remove non-emissions related content from their manufacturer-specific scan tools and sell them to the persons specified in paragraph (f)(2)(i) of this section shall adjust the cost of the tool accordingly lower to reflect the decreased value of the scan tool. All emissions-related content that remains in the manufacturer-specific tool shall be identical to the information that is contained in the complete version of the manufacturer specific tool. Any manufacturer who wishes to implement this option must request approval from the Administrator prior to the introduction of the tool into commerce.

(16) *Special tools.* (i) Manufacturers who have developed special tools to extinguish the malfunction indicator light (MIL) for Model Years 2001 through 2003 shall make available the necessary information to equipment and tool companies to design a comparable generic tool. This information shall be made available to equipment and tool companies no later than September 23, 2003.

(ii) Manufacturers are prohibited from requiring special tools to extinguish the malfunction indicator light (MIL) beginning with Model Year 2004.

(17) *Reference materials.* Manufacturers shall conform with the following Society of Automotive Engineers (SAE) standards.

(i) For Web-based delivery of service information, manufacturers shall comply with SAE Recommended Practice J1930 (Revised, May 1998), ''Electrical/Electronic Systems Diagnostic Terms, Definitions, Abbreviations, and Acronyms'' (Incorporated by reference, *see* § 86.1). This recommended practice standardizes various terms, abbreviations, and acronyms associated with on-board diagnostics. Manufacturers shall comply with SAE J1930 (Incorporated by reference, *see* § 86.1) beginning with Model Year 2004.

(ii) For identification and scaling information necessary to interpret and understand data available to a generic scan tool through ''mode 6'', manufacturers shall comply with SAE Recommended Practice J1979 (Revised, September, 1997), ''EE Diagnostic Test Modes'' (Incorporated by reference, *see* § 86.1). This recommended practice describes the implementation of the diagnostic test modes for emissions-related test data. Manufacturers shall comply with SAE J1979 beginning with Model Year 2004.

(iii) For allowing ECU and equipment and tool manufacturers to satisfy the needs of multiple end users with minimum modification to a basic ECU design, manufacturers shall comply with SAE Recommended Practice J2284–3 (May, 2001), ''High Speed CAN (HSC) for

Vehicle Applications at 500 KBPS'' (Incorporated by reference, see § 86.1). SAE J2284–3 establishes standard ECU physical layer, data link layer, and media design criteria. Manufacturers may comply with SAE J2284–3 beginning with model year 2003 and shall comply with SAE J2284–3 beginning with model year 2008.

(iv) For pass-through reprogramming capabilities, manufacturers shall comply with SAE Recommended Practice J2534 (February, 2002), ''Recommended Practice for Pass-Thru Vehicle Programming'' (Incorporated by reference, *see* § 86.1). This recommended practice provides technical specifications and information that manufacturers must supply to equipment and tool companies to develop aftermarket pass-through reprogramming tools. Manufacturers shall comply with SAE J2534 beginning with model year 2004.

(18) *Reporting requirements.* Manufacturers shall provide to the Administrator reports on an annual basis within 30 days of the end of the calendar year and upon request of the Administrator, that describe the performance of their individual Web sites. These annual reports shall be submitted to the Administrator electronically utilizing non-proprietary software in the format as agreed to by the Administrator and the manufacturers. Manufacturers may request Administrator approval to report on parameters other than those described below if the manufacturer can demonstrate that those alternate parameters will provide sufficient and similar information for the Administrator to effectively evaluate the manufacturer Web site. These annual reports shall include, at a minimum, monthly measurements of the following parameters:

(i) Total successful requests (measured in number of files including graphic interchange formats (GIFs) and joint photographic expert group (JPEG) images, *i.e.* electronic images such as wiring or other diagrams or pictures). This is defined as the total successful request counts of all the files which have been requested, including pages, graphics, etc.

(ii) Total failed requests (measured in number of files). This is defined as the total failed request counts of all the files which were requested but failed because they could not be found or were read-protected. This includes pages, graphics, etc.

(iii) Average data transferred per day (measured by bytes). This is defined as average amount of data transferred per day from one place to another.

(iv) Daily Summary (measured in number of files/pages by day of week). This is defined as the total number of requests each day of the week, over the time period given at the beginning of the report.

(v) Daily report (measured in number of files/pages by the day of the month). This is defined as how many requests there were in each day of a specific month.

(vi) Browser Summary (measured in number of files/pages by browser type, *i.e.*, Netscape, Internet Explorer). This is defined as the versions of a browser by vendor.

(vii) Any other information deemed necessary by the Administrator to determine the adequacy of a manufacturer Web site.

(19) *Prohibited Acts, Liability and Remedies.* (i) It is a prohibited act for any person to fail to promptly provide or cause a failure to promptly provide information as required by this paragraph (f), or to otherwise fail to comply or cause a failure to comply with any provision of this paragraph (f).

(ii) Any person who fails or causes the failure to comply with any provision of this paragraph (f) is liable for a violation of that provision. A corporation is presumed liable for any violations of this subpart that are committed by any of its subsidiaries, affiliates or parents that are substantially owned by it or substantially under its control.

(iii) Any person who violates a provision of this paragraph (f) shall be subject to a civil penalty of not more than $32,500 per day for each violation. This maximum penalty is shown for calendar year 2004. Maximum penalty limits for later years may be set higher based on the Consumer Price Index, as specified in 40 CFR part 19. In addition, such person shall be liable for all other remedies set forth in Title II of the Clean Air Act, remedies pertaining to provisions of Title II of the Clean Air

Act, or other applicable provisions of law.

[64 FR 23925, May 4, 1999, as amended at 68 FR 38455, June 27, 2003; 70 FR 40442, July 13, 2005]

§ 86.1808–07 Maintenance instructions.

Section 86.1808–07 includes text that specifies requirements that differ from those specified in § 86.1808–01. Where a paragraph in § 86.1808–01 is identical and applicable to § 86.1808–07, this may be indicated by specifying the corresponding paragraph and the statement ''[Reserved]. For guidance see § 86.1808–01.''.

(a)–(e) [Reserved]. For guidance see § 86.1808–1.

(f) [Reserved]. For guidance *see* § 86.1808–1. For incorporation by reference *see* §§ 86.1 and 86.1808–1.

(g) For each new diesel-fueled Tier 2 vehicle (certified using a test fuel with 15 ppm sulfur or less), the manufacturer shall furnish or cause to be furnished to the purchaser a statement that ''This vehicle must be operated only with ultra low sulfur diesel fuel (that is, diesel fuel meeting EPA specifications for highway diesel fuel, including a 15 ppm sulfur cap).''.

[66 FR 5190, Jan. 18, 2001, as amended at 68 FR 38461, June 27, 2003; 70 FR 40443, July 13, 2005]

§ 86.1809–01 Prohibition of defeat devices.

(a) No new light-duty vehicle, light-duty truck, or complete heavy-duty vehicle shall be equipped with a defeat device.

(b) The Administrator may test or require testing on any vehicle at a designated location, using driving cycles and conditions which may reasonably be expected to be encountered in normal operation and use, for the purposes of investigating a potential defeat device.

(c) For cold temperature CO emission control, the Administrator will use a guideline to determine the appropriateness of the CO emission control at ambient temperatures between 25 deg. F (−4 deg. C) and 68 deg. F (20 deg. C). The guideline for CO emission congruity across the intermediate temperature range is the linear interpolation between the CO standard applicable at 25 deg. F (−4 deg. C) and the CO standard applicable at 68 deg. F (20 deg. C). For vehicles that exceed this CO emissions guideline upon intermediate temperature cold testing:

(1) If the CO emission level is greater than the 20 deg. F (−7 deg. C) emission standard, the vehicle will automatically be considered to be equipped with a defeat device without further investigation.

(2) If the CO emission level does not exceed the 20 deg. F emission standard, the Administrator may investigate the vehicle design for the presence of a defeat device under paragraph (d) of this section.

(d) For vehicle designs designated by the Administrator to be investigated for possible defeat devices:

(1) The manufacturer must show to the satisfaction of the Administrator that the vehicle design does not incorporate strategies that unnecessarily reduce emission control effectiveness exhibited during the Federal or Supplemental Federal emissions test procedures (FTP or SFTP) when the vehicle is operated under conditions which may reasonably be expected to be encountered in normal operation and use.

(2) Information requirements:

(i) Upon request by the Administrator, the manufacturer will provide an explanation containing detailed information regarding test programs, engineering evaluations, design specifications, calibrations, on-board computer algorithms, and design strategies incorporated for operation both during and outside of the Federal emission test procedure.

(ii) For purposes of investigations of possible cold temperature CO defeat devices under this paragraph (d), the manufacturer shall provide an explanation which must show, to the satisfaction of the Administrator, that CO emissions are reasonably controlled in reference to the linear guideline, across the intermediate temperature range.

(e) For each test group of Tier 2 LDV/LLDTs and HLDT/MDPVs and interim non-Tier 2 LDV/LLDTs and HLDT/MDPVs the manufacturer must submit, with the Part II certification application, an engineering evaluation demonstrating to the satisfaction of the

Administrator that a discontinuity in emissions of non-methane organic gases, carbon monoxide, oxides of nitrogen and formaldehyde measured on the Federal Test Procedure (subpart B of this part) does not occur in the temperature range of 20 to 86 degrees F. For diesel vehicles, the engineering evaluation must also include particulate emissions.

[64 FR 23925, May 4, 1999, as amended at 65 FR 6853, Feb. 10, 2000; 65 FR 59969, Oct. 6, 2000]

§ 86.1810–01 General standards; increase in emissions; unsafe conditions; waivers.

This section applies to model year 2001 and later light-duty vehicles and light-duty trucks fueled by gasoline, diesel, methanol, natural gas and liquefied petroleum gas fuels. This section also applies to MDPVs and complete heavy-duty vehicles certified according to the provisions of this subpart. Multi-fueled vehicles (including dual-fueled and flexible-fueled vehicles) shall comply with all requirements established for each consumed fuel (or blend of fuels in the case of flexible fueled vehicles). The standards of this subpart apply to both certification and in-use vehicles unless otherwise indicated. For Tier 2 and interim non-Tier 2 vehicles, this section also applies to hybrid electric vehicles and zero emission vehicles. Unless otherwise specified, requirements and provisions of this subpart applicable to methanol fueled vehicles are also applicable to Tier 2 and interim non-Tier 2 ethanol fueled vehicles.

(a) Any device, system or element of design installed on or incorporated in a new motor vehicle to enable such vehicle to conform to the standards imposed by this subpart:

(1) Shall not in its operation or function cause the emission into the ambient air of any noxious or toxic substance that would not be emitted in the operation of such vehicle without such system, except as specifically permitted by regulation; and

(2) Shall not in its operation, function or malfunction result in any unsafe condition endangering the vehicle, its occupants, or persons or property in close proximity to the vehicle.

(b) In establishing the physically adjustable range of each adjustable parameter on a new motor vehicle, the manufacturer shall ensure that, taking into consideration the production tolerances, safe vehicle drive ability characteristics are available within that range, as required by section 202(a)(4) of the Clean Air Act.

(c) Every manufacturer of new motor vehicles subject to any of the standards imposed by this subpart shall, prior to taking any of the actions specified in section 203(a)(1) of the Act, test or cause to be tested motor vehicles (or motor vehicle engines) in accordance with good engineering judgment to ascertain that such test vehicles will meet the requirements of this section for the useful life of the vehicle.

(d) *Crankcase emissions prohibited*. No crankcase emissions shall be discharged into the ambient atmosphere from any 2001 and later model year light-duty vehicle, light-duty truck, or complete heavy-duty vehicle certified according to the provisions of this subpart.

(e) *On-board diagnostics*. All light-duty vehicles, light-duty trucks and complete heavy-duty vehicles must have an on-board diagnostic system as described in § 86.1806–01 or § 86.1806–04, as applicable.

(f) *Altitude requirements*. Except for supplemental exhaust emission standards (which apply only at low altitude conditions), all emission standards apply at low altitude conditions and at high altitude conditions. Interim non-Tier 2 LDV/Ts may be certified to applicable Tier 1 exhaust emission standards at high altitude as set forth in §§ 86.1811–01, 86.1812–01, 86.1813–01, 86.1814–02 and 86.1815–02. Requirements to meet emission standards at high altitude are optional for interim non-Tier 2 MDPVs.

(g) The standards set forth in this part refer to test procedures set forth in subparts B, C, O and P of this part.

(h) For methanol-fueled and natural gas-fueled vehicles, hydrocarbon standards refer to hydrocarbon equivalents and nonmethane hydrocarbon standards refer to nonmethane hydrocarbon equivalents.

(i) *Supplemental FTP general provisions*. (1) Implementation schedules. A

minimum of the percentage of a manufacturer's model year sales of light-duty vehicles or light light-duty trucks (considered independently) shown in Table S01–1 and heavy light-duty trucks shown in Table S01–2 shall not exceed the applicable SFTP standards found in paragraph (b) of §§ 86.1811–01, 1812–01, 1813–01, 1814–02, and 1815–02 when tested under the applicable procedures in subpart B of this part. Tables S01–1 and S01–2 follow:

TABLE S01–1—SFTP IMPLEMENTATION SCHEDULE FOR LIGHT-DUTY VEHICLES AND LIGHT LIGHT-DUTY TRUCKS

Model year	Percentage
2000	40
2001	80
2002	100

TABLE S01–2—SFTP IMPLEMENTATION SCHEDULE FOR HEAVY LIGHT-DUTY TRUCKS

Model year	Percentage
2002	40
2003	80
2004	100

(2) Optionally, a minimum of the percentage shown in Table S01–1 of a manufacturer's combined sales of the applicable model year's light-duty vehicles and light light-duty trucks shall not exceed the applicable SFTP standards. Under this option, the light-duty vehicles shall not exceed the applicable SFTP standards in § 86.1811–01(b), and the light light-duty trucks shall not exceed the applicable SFTP standards in § 86.1812–01(b) or § 86.1813–01(b) as applicable.

(3) Sales percentages for the purposes of determining compliance with the applicable SFTP emission standards shall be based on total actual U.S. sales of light-duty vehicles of the applicable model year by a manufacturer to a dealer, distributor, fleet operator, broker, or any other entity which comprises the point of first sale. If the option of paragraph (i)(2) of this section is taken, such sales percentages shall be based on the total actual combined U.S. sales of light-duty vehicles and light light-duty trucks of the applicable model year by a manufacturer to a dealer, distributor, fleet operator, broker, or any other entity which comprises the point of first sale.

(4) The SFTP standards do not apply to vehicles or trucks certified on alternative fuels, but the standards do apply to the gasoline and diesel fuel operation of flexible fuel vehicles and trucks and dual fuel vehicles and trucks.

(5) The SFTP standards do not apply to vehicles or trucks tested at high altitude.

(6) The air to fuel ratio shall not be richer at any time than the leanest air to fuel mixture required to obtain maximum torque (lean best torque), plus a tolerance of six percent. The Administrator may approve a manufacturer's request for additional enrichment if it can be shown that additional enrichment is needed to protect the engine or emissions control hardware. For Tier 2 and interim non-Tier 2 vehicles, this provision does not apply to enrichment that occurs upon cold start, warm-up conditions and rapid-throttle motion conditions (''tip-in'' or ''tip-out'' conditions).

(7) The requirement to use a single roll dynamometer (or a dynamometer which produces equivalent results), discussed in §§ 86.108–00, 86.118–00, and 86.129–00 of subpart B of this part, applies to all SFTP and FTP test elements as set forth in subpart B of this part for test groups which are designated as SFTP compliant under the implementation schedules in Tables S01–1 and S01–2 in paragraph (i)(1) of this section.

(8) Small volume provisions. (i) Light-duty vehicles and light light-duty trucks manufactured by small volume manufacturers, as described in § 86.1801–01(d), are exempt from the requirements of this paragraph until model year 2002, when 100 percent compliance with the provisions of this paragraph (i) and the SFTP standards in § 86.1811–01(b) and § 86.1812–01(b) is required. This exemption does not apply to small volume test groups as defined in § 86.1838–01(b)(2).

(ii) Heavy light-duty trucks manufactured by small volume manufacturers, as defined in § 86.1801–01, are exempt from the requirements of this paragraph (i) until model year 2004 when 100 percent compliance with the provisions

of this paragraph and the SFTP standards in §§ 86.1814–02(b) and 86.1815–02(b) is required. This exemption does not apply to small volume test groups as defined in § 86.1838–01(b)(2).

(9) [Reserved]

(10) The manufacturer must state at the time of Application for Certification, based on projected U.S. sales or projected production for U.S. sale, which test groups will be used to attain the required implementation schedule sales percentages for certification purposes.

(11) A manufacturer cannot use one set of test groups to meet its intermediate useful life standards and another to meet its full useful life standards. The same test groups which are used to meet the intermediate useful life standards will be required to meet the corresponding full useful life standards.

(12) Compliance with composite standards shall be demonstrated using the calculations set forth in § 86.164–00.

(13) *A/C-on specific calibrations.* (i) For Tier 2 and interim non-Tier 2 vehicles, A/C-on specific calibrations (e.g. air to fuel ratio, spark timing, and exhaust gas recirculation), may be used which differ from A/C-off calibrations for given engine operating conditions (e.g., engine speed, manifold pressure, coolant temperature, air charge temperature, and any other parameters).

(ii) Such calibrations must not unnecessarily reduce the NMHC+NO_X emission control effectiveness during A/C-on operation when the vehicle is operated under conditions which may reasonably be expected to be encountered during normal operation and use.

(iii) If reductions in control system NMHC+NO_X effectiveness do occur as a result of such calibrations, the manufacturer must, in the Application for Certification, specify the circumstances under which such reductions do occur, and the reason for the use of such calibrations resulting in such reductions in control system effectiveness.

(iv) A/C-on specific ''open-loop'' or ''commanded enrichment'' air-fuel enrichment strategies (as defined below), which differ from A/C-off ''open-loop'' or ''commanded enrichment'' air-fuel enrichment strategies, may not be used, with the following exceptions: Cold-start and warm-up conditions, or, subject to Administrator approval, conditions requiring the protection of the vehicle, occupants, engine, or emission control hardware. Other than these exceptions, such strategies which are invoked based on manifold pressure, engine speed, throttle position, or other engine parameters must use the same engine parameter criteria for the invoking of this air-fuel enrichment strategy and the same degree of enrichment regardless of whether the A/C is on or off. ''Open-loop'' or ''commanded'' air-fuel enrichment strategy is defined as enrichment of the air to fuel ratio beyond stoichiometry for the purposes of increasing engine power output and the protection of engine or emissions control hardware. However, ''closed-loop biasing,'' defined as small changes in the air-fuel ratio for the purposes of optimizing vehicle emissions or driveability, must not be considered an ''open-loop'' or ''commanded'' air-fuel enrichment strategy. In addition, ''transient'' air-fuel enrichment strategy (or ''tip-in'' and ''tip-out'' enrichment), defined as the temporary use of an air-fuel ratio rich of stoichiometry at the beginning or duration of rapid throttle motion, must not be considered an ''open-loop'' or ''commanded'' air-fuel enrichment strategy.

(14) ''*Lean-on-cruise*'' *calibration strategies.* (i) For Tier 2 and interim non-Tier 2 vehicles, the manufacturer must state in the Application for Certification whether any ''lean-on-cruise'' strategies are incorporated into the vehicle design. A ''lean-on-cruise'' air-fuel calibration strategy is defined as the use of an air-fuel ratio significantly greater than stoichiometry, during non-deceleration conditions at speeds above 40 mph. ''Lean-on-cruise'' air-fuel calibration strategies must not be employed during vehicle operation in normal driving conditions, including A/C usage, unless at least one of the following conditions is met:

(A) Such strategies are substantially employed during the FTP or SFTP;

(B) Such strategies are demonstrated not to significantly reduce vehicle

NMHC+NO_X emission control effectiveness over the operating conditions in which they are employed; or

(C) Such strategies are demonstrated to be necessary to protect the vehicle occupants, engine, or emission control hardware.

(ii) If the manufacturer proposes to use a ''lean-on-cruise'' calibration strategy, the manufacturer must specify the circumstances under which such a calibration would be used, and the reason or reasons for the proposed use of such a calibration.

(j) *Evaporative emissions general provisions.* (1) The evaporative standards in §§ 86.1811–01(d), 86.1811–04(e), 86.1812–01(d), 86.1813–01(d), 86.1814–01(d), 86.1814–02(d), 86.1815–01(d), 1815–02(d) and 86.1816–04(d) apply equally to certification and in-use vehicles and trucks. The spitback standard also applies to newly assembled vehicles.

(2) For certification testing only, manufacturers may conduct testing to quantify a level of non-fuel background emissions for an individual test vehicle. Such a demonstration must include a description of the source(s) of emissions and an estimated decay rate. The demonstrated level of non-fuel background emissions may be subtracted from evaporative emission test results from certification vehicles if approved in advance by the Administrator.

(3) All fuel vapor generated in a gasoline- or methanol-fueled light-duty vehicle, light-duty truck, or complete heavy-duty vehicle during in-use operation shall be routed exclusively to the evaporative control system (*e.g.*, either canister or engine purge.) The only exception to this requirement shall be for emergencies.

(4) For certification purposes, where the applicable California evaporative emission standard is as stringent or more stringent than the applicable federal evaporative emission standard, the Administrator may accept California certification test data indicating compliance with the California standard to demonstrate compliance with the appropriate federal certification evaporative emission standard. The Administrator may require the manufacturer to provide comparative test data which clearly demonstrates that a vehicle meeting the California evaporative standard (when tested under California test conditions/test procedures) will also meet the appropriate federal evaporative emission standard when tested under federal test conditions/test procedures described in this Part 86.

(k) *Refueling emissions general provisions*—(1) *Implementation schedules.* (i) Tables S01–3, S01–4, and S01–5 in this paragraph (k)(1)(i) give the minimum percentage of a manufacturer's sales of the applicable model year's gasoline- and methanol-fueled Otto-cycle and petroleum-fueled and methanol-fueled diesel-cycle light-duty vehicles, light-duty trucks and complete heavy-duty vehicles which shall be tested under the applicable procedures in subpart B of this part, and shall not exceed the standards described in §§ 86.1811–01(e), 86.1811–04(e)(3), 86.1812–01(e), 86.1813–01(e), and 86.1816–04(e). Vehicles waived from the emission standards under the provisions of paragraphs (m) and (n) of this section shall not be counted in the calculation of the percentage of compliance. Either manufacturer sales or actual production intended for sale in the United States may be used to determine combined volume, at the manufacturers option. Tables S01–3, S01–4, and S01–5 follow:

TABLE S01–3—LIGHT-DUTY VEHICLES

Model year	Percentage
1998 [a]	40
1999 [a]	80
2000 [a]	100

[a] NOTE: This subpart prescribes standards for 2001 and later MY vehicles. However, the implementation phase-in periods prior to this date are included for ease of reference.

TABLE S01–4—LIGHT LIGHT-DUTY TRUCKS

Model year	Percentage
2001	40
2002	80
2003	100

TABLE S01–5—HEAVY LIGHT-DUTY TRUCKS

Model year	Percentage
2004	40
2005	80
2006	100

(ii) Either manufacturer sales or actual production intended for sale in the

United States may be used to determine combined volume, at the manufacturers option.

(2) *Determining sales percentages.* Sales percentages for the purposes of determining compliance with the applicable refueling emission standards light-duty vehicles, light-duty trucks, medium-duty passenger vehicles, and complete heavy-duty vehicles shall be based on total actual U.S. sales of heavy light-duty trucks and complete heavy-duty vehicles of the applicable model year by a manufacturer to a dealer, distributor, fleet operator, broker, or any other entity which comprises the point of first sale.

(3) *Refueling receptacle requirements.* Refueling receptacles on natural gas-fueled vehicles shall comply with the receptacle provisions of the ANSI/AGA NGV1–1994 standard (as incorporated by reference in § 86.1(b)(3)). This requirement is subject to the phase-in schedules in Tables S01–3 and S01–4 of paragraph (k)(1)(i) of this section.

(l) *Fuel dispensing spitback testing waiver.* (1) Vehicles certified to the refueling emission standards set forth in § 86.1811–04(e), § 86.1812–01(e), § 86.1813–01(e), § 86.1816–05(e) are not required to demonstrate compliance with the fuel dispensing spitback standard contained in that section provided that:

(i) The manufacturer certifies that the vehicle inherently meets the fuel dispensing spitback standard as part of compliance with the refueling emission standard; and

(ii) This certification is provided in writing and applies to the full useful life of the vehicle.

(2) EPA retains the authority to require testing to enforce compliance and to prevent noncompliance with the fuel dispensing spitback standard.

(m) Inherently low refueling emission testing waiver. (1) Vehicles using fuels/fuel systems inherently low in refueling emissions are not required to conduct testing to demonstrate compliance with the refueling emission standards set forth in § 86.1811–04(e), § 86.1812–01(e), § 86.1813–01(e) and § 86.1816–05(e) provided that:

(i) This provision is only available for petroleum diesel fuel. It is only available if the Reid Vapor Pressure of in-use diesel fuel is equal to or less than 1 psi (7 kPa) and for diesel vehicles whose fuel tank temperatures do not exceed 130 deg. F (54 deg. C); and

(ii) To certify using this provision the manufacturer must attest to the following evaluation: ''Due to the low vapor pressure of diesel fuel and the vehicle tank temperatures, hydrocarbon vapor concentrations are low and the vehicle meets the 0.20 grams/gallon refueling emission standard without a control system.''

(2) The certification required in paragraph (m)(1)(ii) of this section must be provided in writing and must apply for the full useful life of the vehicle.

(3) EPA reserves the authority to require testing to enforce compliance and to prevent noncompliance with the refueling emission standard.

(n) *Fixed liquid level gauge waiver.* Liquefied petroleum gas-fueled vehicles which contain fixed liquid level gauges or other gauges or valves which can be opened to release fuel or fuel vapor during refueling, and which are being tested for refueling emissions, are not required to be tested with such gauges or valves open, as outlined in § 86.157–98(d)(2), provided the manufacturer can demonstrate, to the satisfaction of the Administrator, that such gauges or valves would not be opened during refueling in-use due to inaccessibility or other design features that would prevent or make it very unlikely that such gauges or valves could be opened.

(o) Unless otherwise approved by the Administrator, manufacturers must measure NMOG emissions in accordance with the California Non-Methane Organic Gas Test Procedures. These procedures are incorporated by reference (see § 86.1).

(p) For gasoline and diesel-fueled Tier 2 and interim non-Tier 2 vehicles, manufacturers may measure non-methane hydrocarbons (NMHC) in lieu of NMOG. Manufacturers must multiply NMHC measurements from gasoline vehicles by an adjustment factor of 1.04 before comparing with the NMOG standard to determine compliance with that standard. Manufacturers may use other factors to adjust NMHC results to more properly represent NMOG results. Such factors must be based upon comparative testing of NMOG and

NMHC emissions and be approved in advance by the Administrator.

[64 FR 23925, May 4, 1999, as amended at 65 FR 6853, Feb. 10, 2000; 65 FR 59969, Oct. 6, 2000; 66 FR 5190, Jan. 18, 2001; 66 FR 19309, Apr. 13, 2001; 70 FR 72928, Dec. 8, 2005]

§ 86.1811–01 Emission standards for light-duty vehicles.

This section applies to 2001 and later model year light-duty vehicles fueled by gasoline, diesel, methanol, natural gas and liquefied petroleum gas fuels except as noted. Multi-fueled vehicles shall comply with all requirements established for each consumed fuel. For methanol fueled vehicles, references in this section to total hydrocarbons shall mean total hydrocarbon equivalents and references to non-methane hydrocarbons shall mean non-methane hydrocarbon equivalents. This section does not apply to 2004 and later model year vehicles, except as specifically referenced by § 86.1811–04.

(a) *Exhaust emission standards.* (1) Exhaust emissions shall not exceed the following standards at intermediate useful life:

(i) Total hydrocarbons: 0.41 grams per mile, except natural gas, which has no standard.

(ii) Non-methane hydrocarbons: 0.25 grams per mile.

(iii) Carbon monoxide: 3.4 grams per mile.

(iv) Oxides of nitrogen: 0.4 grams per mile except diesel fuel which has a 1.0 gram per mile standard.

(v) Particulate matter: 0.08 grams per mile.

(2) Exhaust emissions shall not exceed the following standards at full useful life:

(i) [Reserved]

(ii) Non-methane hydrocarbons: 0.31 grams per mile.

(iii) Carbon monoxide: 4.2 grams per mile.

(iv) Oxides of nitrogen: 0.6 grams per mile except diesel fuel which has a 1.25 gram per mile standard.

(v) Particulate matter: 0.10 grams per mile.

(b) *Supplemental exhaust emission standards.* (1) Supplemental exhaust emissions from gasoline-fueled and diesel-fueled light-duty vehicles shall not exceed the following standards at intermediate useful life:

(i) Nonmethane hydrocarbon and oxides of nitrogen composite: 0.65 grams per mile except diesel fuel which has a 1.48 gram per mile standard.

(ii) Carbon monoxide. Regulated vehicles shall meet at least one of the following two sets of standards:

(A) *Individual US06 and SC03 Air Conditioning compliance.* Comply with both the following standards:

(*1*) 3.0 grams per mile on the A/C test, not applicable to diesel fueled vehicles; and

(*2*) 9.0 grams per mile on the US06 test; or

(B) *Composite Carbon Monoxide Standard:* 3.4 grams per mile.

(2) Supplemental exhaust emissions from gasoline-fueled and diesel-fueled light-duty vehicles shall not exceed the following standards at full useful life:

(i) Nonmethane hydrocarbon and oxides of nitrogen composite: 0.91 grams per mile except diesel-fueled which have a 2.07 gram per mile standard.

(ii) *Carbon monoxide.* Regulated vehicles shall meet at least one of the following two sets of standards:

(A) *Individual US06 and SC03 Air Conditioning compliance.* Comply with both the following standards:

(*1*) 3.7 grams per mile on the A/C test, not applicable to diesel fueled vehicles; and

(*2*) 11.1 grams per mile on the US06 test; or

(B) *Composite Carbon Monoxide Standard:* 4.2 grams per mile.

(c) *Cold temperature emission standards.* Exhaust emissions from gasoline-fueled light-duty vehicles shall not exceed the cold temperature CO standard of 10.0 grams carbon monoxide per mile for an intermediate useful life of 50,000 miles.

(d) *Evaporative emission standards.* Evaporative emissions from gasoline-fueled, natural gas-fueled, liquefied petroleum gas-fueled, and methanol-fueled light-duty vehicles shall not exceed the following standards. The standards apply equally to certification and in-use vehicles. The spitback standard also applies to newly assembled vehicles.

(1) *Hydrocarbons.* (i) For the full three-diurnal test sequence, diurnal

plus hot soak measurements: 2.0 grams per test.

(ii) *Gasoline and methanol-fueled only*. For the supplemental two-diurnal test sequence, diurnal plus hot soak measurements: 2.5 grams per test.

(iii) *Gasoline and methanol-fueled only*. For the running loss test: 0.05 grams per mile.

(iv) *Gasoline and methanol-fueled only*. For the fuel dispensing spitback test: 1.0 gram hydrocarbon (carbon for methanol-fueled) per test.

(2) [Reserved]

(e) *Refueling emissions*. Refueling emissions from 2001 and later model year light-duty vehicles shall not exceed the following standards:

(1) For gasoline-fueled, diesel fueled, and methanol-fueled vehicles: 0.20 grams hydrocarbon per gallon (0.053 gram per liter) of fuel dispensed.

(2) For liquefied petroleum gas-fueled vehicles: 0.15 grams hydrocarbon per gallon (0.04 gram per liter) of fuel dispensed.

(f) *Certification short test*. Certification short test emissions from gasoline-fueled Otto-cycle light-duty vehicles shall not exceed the following standards:

(1) Hydrocarbons: 100 ppm as hexane.

(2) Carbon monoxide: 0.5%.

(g) Manufacturers may request to group light-duty vehicles into the same test group as vehicles subject to more stringent standards, so long as those light-duty vehicles meet the most stringent standards applicable to any vehicle within that test group, as provided at § 86.1827(a)(5) and (d)(4).

[64 FR 23925, May 4, 1999, as amended at 65 FR 6854, Feb. 10, 2000; 65 FR 59970, Oct. 6, 2000]

§ 86.1811–04 Emission standards for light-duty vehicles, light-duty trucks and medium-duty passenger vehicles.

(a) *Applicability*. (1) This section contains regulations implementing emission standards for all LDVs, LDTs and MDPVs. This section applies to 2004 and later model year LDVs, LDTs and MDPVs fueled by gasoline, diesel, methanol, ethanol, natural gas and liquefied petroleum gas fuels, except as noted. Additionally, this section contains provisions applicable to hybrid electric vehicles (HEVs) and zero emission vehicles (ZEVs). Multi-fueled vehicles must comply with all requirements established for each consumed fuel.

(2) This section also applies to LDVs, LDTs and MDPVs of model years prior to 2004, when manufacturers certify such vehicles to Tier 2 exhaust emission requirements to utilize alternate phase-in schedules, as allowed under paragraph (k)(6) of this section, and/or to earn early NO_X credits for use in complying with the Tier 2 fleet average NO_X standard which takes effect in the 2004 model year for LDV/LLDTs and 2008 for HLDT/MDPVs.

(3) Except where otherwise specified, this section applies instead of §§ 86.1811–01, 86.1812–01, 86.1813–01, 86.1814–01, 86.1814–02, 86.1815–01, and 86.1815–02.

(4) Except where otherwise specified, the provisions of this section apply equally to LDVs and all categories of LDTs, and to all MDPVs. Numerous provisions are applicable equally to HLDTs and MDPVs, as reflected by the term HLDT/MDPV. Numerous provisions apply equally to LDVs and LLDTs as reflected by the term LDV/LLDT.

(5) The exhaust emission standards and evaporative emission standards of this section apply equally to certification and in-use LDVs, LDTs and MDPVs, unless otherwise specified.

(b) *Test weight*. (1) Except as required in paragraphs (b)(2) and (b)(4) of this section, or permitted under paragraph (b)(3) of this section, emission testing of all LDVs, LDTs and MDPVs to determine compliance with any exhaust or evaporative emission standard set forth in this Part must be on a loaded vehicle weight (LVW) basis, as that term is defined in this subpart.

(2) Interim non-Tier 2 HLDTs tested to Tier 1 SFTP standards, must be tested on an adjusted loaded vehicle weight (ALVW) basis, as that term is defined in this subpart, during the SC03 element of the SFTP.

(3) Except as required in paragraphs (b)(2) and (b)(4) of this section, interim non-Tier 2 HLDT/MDPVs may be tested on an ALVW basis or an LVW basis to demonstrate compliance with any exhaust or evaporative emission standard set forth in this Part.

(4) MDPVs certified to bin 11 standards from Tables S04–1 and –2 must be tested on an ALVW basis to demonstrate compliance with any exhaust emission standard set forth in this part.

(c) *Tier 2 FTP exhaust emission standards.* Exhaust emissions from Tier 2 vehicles must not exceed the standards in Table S04–1 of this section at full useful life when tested over the Federal Test Procedure (FTP) described in subpart B of this part. Exhaust emissions from Tier 2 vehicles must not exceed the standards in Table S04–2 of this section at intermediate useful life, if applicable, when tested over the FTP.

(1) For a given test group a manufacturer desires to certify to operate only on one fuel, the manufacturer must select a set of standards from the same bin (line or row) in Table S04–1 of this section for non-methane organic gases (NMOG), carbon monoxide (CO), oxides of nitrogen (NO_X), formaldehyde (HCHO) and particulate matter (PM). The manufacturer must certify the test group to meet those standards, subject to all the applicable provisions of this subpart. The manufacturer must also certify the test group to meet the intermediate useful life standards (if any) in Table S04–2 of this section having the same EPA bin reference number as the chosen full useful life standards.

(2) For a given test group of flexible-fueled, bi-fuel or dual fuel vehicles when operated on the alcohol or gaseous fuel they are designed to use, manufacturers must select a bin of standards from Table S04–1 of this section and the corresponding bin in Table S04–2, if any. When these flexible-fueled, bi-fuel or dual fuel vehicles are certified to operate on gasoline or diesel fuel, the manufacturer may choose to comply with the next numerically higher applicable NMOG standard, if any, above the bin which contains the standards selected for certification on the gaseous or alcohol fuel.

(3)(i) For a given test group of flexible-fueled, bi-fuel or dual fuel vehicles certified to bin 10 in Table S04–1, when operated on the alcohol or gaseous fuel they are designed to use, manufacturers may choose to comply with an NMOG standard of 0.230 for LDV/LLDTs or 0.280 g/mi for HLDT/MDPVs at full useful life and corresponding intermediate life standards of 0.160 g/mi and 0.195 g/mi, respectively, when these flexible-fueled, bi-fuel or dual fuel vehicles are certified to operate on gasoline or diesel fuel.

(ii) For a given test group of flexible-fueled, bi-fuel or dual fuel vehicles certified to bin 8 in Table S04–1, when operated on the alcohol or gaseous fuel they are designed to use, manufacturers may choose to comply with a NMOG standard of 0.156 g/mi for LDV/LLDTs and 0.180 for HLDT/MDPVs at full useful life and corresponding intermediate life standards of 0.125 g/mi and 0.140 g/mi, respectively, when these flexible-fueled, bi-fuel or dual fuel vehicles are certified to operate on gasoline or diesel fuel.

(4)(i) For bins where intermediate life standards are applicable, a manufacturer may elect not to comply with such standards. Except as permitted in paragraph (c)(4)(iv) of this section, the manufacturer must certify such vehicles to a useful life of 15 years or 150,000 miles, whichever occurs first, for LDV/LLDTs and HLDT/MDPVs.

(ii) A manufacturer electing not to comply with intermediate life standards, as permitted in paragraph (c)(4)(i) of this section, may not generate additional NO_X credits as described under § 86.1860–04 (g), except as permitted in paragraph (c)(4)(iii) of this section.

(iii) For bins where intermediate life standards are not applicable, or are specified to be optional by paragraph (c)(4)(iv) of this section, a manufacturer may generate additional NO_X credits subject to the provisions in § 86.1860–04 (g).

(iv) For diesel vehicles certified to bin 9 or bin 10, intermediate life standards are optional regardless of whether the manufacturer certifies the test group to a full useful life of 120,000 miles or 150,000 miles.

(5) In a given model year, an individual vehicle may not be included in both the Tier 2 program and an interim program.

(6) Tables S04–1 and S04–2 follow:

TABLE S04–1—TIER 2 AND INTERIM NON-TIER 2 FULL USEFUL LIFE EXHAUST MASS EMISSION STANDARDS

[Grams per mile]

Bin No.	NO_X	NMOG	CO	HCHO	PM	Notes
11	0.9	0.280	7.3	0.032	0.12	a, c
10	0.6	0.156/0.230	4.2/6.4	0.018/0.027	0.08	a, b, d
9	0.3	0.090/0.180	4.2	0.018	0.06	a, b, e
8	0.20	0.125/0.156	4.2	0.018	0.02	b,f
7	0.15	0.090	4.2	0.018	0.02	
6	0.10	0.090	4.2	0.018	0.01	
5	0.07	0.090	4.2	0.018	0.01	
4	0.04	0.070	2.1	0.011	0.01	
3	0.03	0.055	2.1	0.011	0.01	
2	0.02	0.010	2.1	0.004	0.01	
1	0.00	0.000	0.0	0.000	0.00	

Notes:
[a] This bin and its corresponding intermediate life bin are deleted at end of 2006 model year (end of 2008 model year for HLDTs and MDPVs).
[b] Higher NMOG, CO and HCHO values apply for HLDTs and MDPVs only.
[c] This bin is only for MDPVs.
[d] Optional NMOG standard of 0.280 g/mi applies for qualifying LDT4s and qualifying MDPVs only.
[e] Optional NMOG standard of 0.130 g/mi applies for qualifying LDT2s only.
[f] Higher NMOG standard deleted at end of 2008 model year.

TABLE S04–2—TIER 2 AND INTERIM NON-TIER 2 INTERMEDIATE USEFUL LIFE (50,000 MILE) EXHAUST MASS EMISSION STANDARDS (GRAMS PER MILE)

Bin No.	NO_X	NMOG	CO	HCHO	PM	Notes
11	0.6	0.195	5.0	0.022		a,c,f,h
10	0.4	0.125/0.160	3.4/4.4	0.015/0.018		a,b,d,f,g,h
9	0.2	0.075/0.140	3.4	0.015		a,b,e,f,g,h
8	0.14	0.100/0.125	3.4	0.015		b,f,h,i
7	0.11	0.075	3.4	0.015		f,h
6	0.08	0.075	3.4	0.015		f,h
5	0.05	0.075	3.4	0.015		f,h

Notes:
[a] This bin deleted at end of 2006 model year (end of 2008 model year for HLDTs and MDPVs).
[b] Higher NMOG, CO and HCHO values apply for HLDTs and MDPVs only.
[c] This bin is only for MDPVs.
[d] Optional NMOG standard of 0.195 g/mi applies for qualifying LDT4s and qualifying MDPVs only.
[e] Optional NMOG standard of 0.100 g/mi applies for qualifying LDT2s only.
[f] The full useful life PM standards from Table S04–1 also apply at intermediate useful life.
[g] Intermediate life standards of this bin are optional for diesels.
[h] Intermediate life standards are optional for vehicles certified to a useful life of 150,000 miles.
[i] Higher NMOG standard deleted at end of 2008 model year.

(d) *Fleet average NO_X Standards.* (1)(i) For a given individual model year's sales of Tier 2 vehicles, including model years during the phase-in years of the Tier 2 standards, manufacturers must comply with a fleet average oxides of nitrogen (NO_X) standard of 0.07 grams per mile. The manufacturer must calculate its fleet average NO_X emission level(s) as described in § 86.1860–04. Up through and including model year 2008, manufacturers must calculate separate fleet average NO_X emission levels for LDV/LLDTs and for HLDT/MDPVs as described in § 86.1860–04.

(ii) During a phase-in year, the manufacturer must comply with the 0.07 g/mi fleet average standard for the required phase-in percentage for that year as specified in paragraph (k)(1) of this section, or for the alternate phase-in percentage as permitted under paragraph (k)(6) of this section.

(2) *For Early Tier 2 LDV/LLDTs.* For model years prior to 2004, where the manufacturer desires to bank early Tier 2 NO_X credits as permitted under § 86.1861(c), the manufacturer must comply with a fleet average standard of 0.07 grams per mile for its Tier 2 LDV/LLDTs. Manufacturers must determine compliance with the NO_X fleet average standard according to regulations in § 86.1860–04 of this subpart.

(3) *For Early Tier 2 HLDT/MDPVs.* For model years prior to 2008, where the manufacturer desires to bank early

Tier 2 NO_X credits as permitted under § 86.1861(c), the manufacturer must comply with a fleet average standard of 0.07 grams per mile for its Tier 2 HLDT/MDPVs. Manufacturers must determine compliance with the NO_X fleet average standard according to regulations in § 86.1860–04.

(e) *Evaporative emission standards.* Consistent with the phase-in requirements in paragraph (k) of this section, evaporative emissions from gasoline-fueled, natural gas-fueled, liquefied petroleum gas-fueled, ethanol-fueled and methanol-fueled vehicles must not exceed the standards in this paragraph (e). The standards apply equally to certification and in-use vehicles.

(1) *Diurnal-plus-hot soak evaporative hydrocarbon standards.* Hydrocarbons for LDV/LLDTs, HLDTs and MDPVs must not exceed the diurnal plus hot soak standards shown in Table S04–3 for the full three diurnal test sequence and for the supplemental two diurnal test sequence. Table S04–3 follows:

TABLE S04–3—LIGHT-DUTY DIURNAL PLUS HOT SOAK EVAPORATIVE EMISSION STANDARDS

[grams per test]

Vehicle category	3 day diurnal+hot soak	Supplemental 2 day diurnal+hot soak
LDV/LLDTs	0.95	1.2
HLDTs	1.2	1.5
MDPVs	1.4	1.75

(2) *Running loss standard.* Hydrocarbons for LDVs, LDTs and MDPVs measured on the running loss test must not exceed 0.05 grams per mile.

(3) *Refueling emission standards.* Refueling emissions must not exceed the following standards:

(i) For gasoline-fueled, diesel-fueled and methanol-fueled LDVs, LDTs and MDPVs: 0.20 grams hydrocarbon per gallon (0.053 grams per liter) of fuel dispensed.

(ii) For liquefied petroleum gas-fueled LDV, LDTs and MDPVs: 0.15 grams hydrocarbon per gallon (0.04 grams per liter) of fuel dispensed.

(iii) Refueling standards for HLDTs are subject to the phase-in requirements found in § 86.1810–01(k). MDPVs must also comply with the phase-in requirement in § 86.1810–01(k) and must be grouped with HLDTs to determine phase-in compliance.

(4) *Spitback standards.* For gasoline and methanol fueled LDV/Ts and MDPVs, hydrocarbons measured on the fuel dispensing spitback test must not exceed 1.0 grams hydrocarbon (carbon if methanol-fueled) per test.

(5) *Evaporative emission requirements for interim vehicles.* (i) LDV/Ts not certified to meet the evaporative emission standards in this paragraph (e) as permitted under the phase-in schedule of paragraph (k) of this section, must meet applicable evaporative emission standards in §§ 86.1811–01, 86.1812–01, 86.1813–01, 86.1814–02 or 86.1815–02 except that all LDV/Ts must meet the refueling emission standards in paragraph (e)(3) of this section.

(ii) MDPVs not certified to meet the evaporative emission standards in this paragraph (e) as permitted under the phase-in schedule of paragraph (k) of this section, must meet applicable evaporative emission standards for heavy-duty vehicles in § 86.099–10.

(6) In cases where applicable California emission standards are as stringent or more stringent than applicable standards specified under this paragraph (e), the Administrator may accept data indicating compliance with California standards to demonstrate compliance for certification purposes with the standards required under this paragraph (e). The Administrator may require manufacturers to provide comparative test data to show that a vehicle meeting California standards under California test conditions and procedures will also meet the standards under this paragraph (e) when tested under test conditions and procedures in this Part 86.

(f) *Supplemental exhaust emission standards for LDV/Ts.* (1) Supplemental exhaust emission standards are applicable to gasoline and diesel-fueled LDV/Ts but are not applicable to MDPVs, alternative fueled LDV/Ts, or flexible fueled LDV/Ts when operated on a fuel other than gasoline or diesel. Except as otherwise specified in this paragraph (f), manufacturers must comply with 4000 mile and full useful life SFTP standards as determined in this paragraph (f). The 4000 mile SFTP standards must be taken from Table

S04–4 and the full life SFTP standards must be calculated using the formula in paragraph (f)(2) of this section. Table S04–4 follows:

TABLE S04–4—4000 MILE SFTP STANDARDS FOR TIER 2 AND INTERIM NON-TIER 2 LDVS AND LDTS

	US06		SC03	
	NMHC+NO_X (g/mi)	CO (g/mi)	NMHC+NO_X (g/mi)	CO (g/mi)
LDV/LDT1	0.14	8.0	0.20	2.7
LDT2	0.25	10.5	0.27	3.5
LDT3	0.4	10.5	0.31	3.5
LDT4	0.6	11.8	0.44	4.0

(2)(i) Manufacturers must calculate their applicable full useful life SFTP standards for NMHC+ NO_X, PM and for CO, if using the weighted CO standard. If not using the weighted CO standard, manufacturers may use the full useful life standalone Tier 1 standards for US06 and SC03. To calculate the applicable full useful life weighted NMHC+ NO_X, PM and CO standards, manufacturers must use the following formula:

SFTP Standard = SFTP $Standard_1 - [0.35 \times (FTP\ Standard_1 - Current\ FTP\ Standard)]$

Where:

SFTP Standard = Applicable full life weighted SFTP standard for NMHC+ NO_X, PM or CO. The NMHC+ NO_X and PM standards must be rounded to two decimal places and the CO standard must be rounded to one decimal place.

SFTP $Standard_1$ = Applicable full life Tier 1 SFTP standard for NMHC+NO_X or CO from Table S04–5. For PM only, use FTP $Standard_1$ for SFTP $Standard_1$.

FTP $Standard_1$ = Applicable full life Tier 1 FTP standard from Table S04–6 in this paragraph (f). For the Tier 1 NMHC+NO_X standard, add the applicable NMHC and NOx standards.

Current FTP Standard = Applicable full life FTP standard from Table S04–1 in paragraph (c) of this section. For the current NMHC+NO_X standard, add the NMOG and NO_X standards from the applicable bin.

TABLE S04–5—TIER 1 FULL USEFUL LIFE SFTP STANDARDS

Vehicle category	NMHC + NO_X (weighted g/mi) [a,c]	CO (g/mi) [b,c]		
		US06	SC03	Weighted
LDV/LDT1	0.91 (0.65)	11.1 (9.0)	3.7 (3.0)	4.2 (3.4)
LDT2	1.37 (1.02)	14.6 (11.6)	4.9 (3.9)	5.5 (4.4)
LDT3	1.44	16.9	5.6	6.4
LDT4	2.09	19.3	6.4	7.3

[a] Weighting for NMHC+NO_X and optional weighting for CO is 0.35x(FTP) +0.28x(US06)+0.37x(SC03).
[b] CO standards are stand alone for US06 and SC03 with option for a weighted standard.
[c] Intermediate life standards are shown in parentheses for diesel LDV/LLDTs opting to calculate intermediate life SFTP standards in lieu of 4,000 mile SFTP standards as permitted under paragraph (f)(6) of this section.

TABLE S04–6—TIER 1 FULL USEFUL LIFE FTP STANDARDS (G/MI)

Vehicle category	NMHC [a]	NO_X [a]	CO [a]	PM
LDV/LDT1	0.31 (0.25)	0.6 (0.4)	4.2 (3.4)	0.10
LDT2	0.40 (0.32)	0.97(0.7)	5.5 (4.4)	0.10
LDT3	0.46	0.98	6.4	0.10
LDT4	0.56	1.53	7.3	0.12

[a] Intermediate life standards are shown in parentheses for diesel LDV/LLDTs opting to calculate intermediate life SFTP standards in lieu of 4,000 mile SFTP standards as permitted under paragraph (f)(6)of this section.

(ii)(A) Manufacturers must determine compliance with NMHC+NO_X, CO and PM weighted SFTP standards calculated in paragraph (f)(2)(i) of this section by weighting their emission results as follows:

$0.35 \times (FTP) + 0.28 \times (US06) + 0.37 \times (SC03)$.

(B) The results of the calculation in paragraph (f)(2)(ii)(A) of this section must be rounded to one more decimal place than the applicable standard calculated in paragraph (f)(2)(i) of this section and then compared with that standard.

(3) For interim non-Tier 2 gasoline, diesel and flexible-fueled LDT3s and LDT4s, manufacturers may, alternatively, meet the gasoline-fueled vehicle SFTP standards found in §§ 86.1814–02 and 86.1815–02, respectively.

(4) Interim non-Tier 2 gasoline, diesel and flexible-fueled LDV/LLDTs certified to bin 10 FTP exhaust emission standards from Table S04–1 in paragraph (c) of this section may meet the gasoline Tier 1 SFTP requirements found at §§ 86.1811–01(b), 86.1812–01(b), 86.1813–01(b), for LDVs, LDT1s, and LDT2s, respectively.

(5) SFTP standards for PM are not applicable to interim non-Tier 2 LDV/Ts. For Tier 2 LDV/Ts, the 4000 mile PM standard is equal to the full life PM standard calculated under paragraph (f)(2) of this section. The requirements of this paragraph (f)(5) also apply to Tier 2 flexible fuel vehicles when operated on gasoline or diesel fuel. (See regulations in § 86.1829-01(b)(1)(iii)(B) regarding data submittal for PM results for gasoline vehicles.)

(6)(i) In lieu of complying with 4000 mile SFTP standards described in this paragraph, diesel LDV/LLDTs through model year 2006, may comply instead with intermediate life SFTP standards derived from Tier 1 intermediate life SFTP standards for gasoline vehicles.

(ii) To calculate intermediate life SFTP standards, substitute intermediate life Tier 1 FTP and SFTP values from Tables S04–5 and S04–6 in this paragraph (f), as appropriate, for the full life values in the equation in paragraph (f)(2)(i) of this section. Substitute the applicable intermediate life standards for the full life current FTP standard. If there is no applicable intermediate life standard use the full life current FTP standard.

(iii) A manufacturer of diesel LDV/LLDTs must declare which option it will use (4,000 mile or intermediate life standards) in Part I of its certification application.

(7) For diesel vehicles certified to the bin 9 or bin 10 standards of paragraph (c) of this section, 4000 mile SFTP and intermediate life SFTP standards are optional regardless of whether the manufacturer certifies the test group to a full useful life of 120,000 miles or 150,000 miles.

(8)(i) For model year 2007 through 2009 diesel LDVs and diesel LDT1s only, a manufacturer may optionally comply with the 4000 mile US06 NMHC+NO_X standard shown in Table S04–4 for LDT2s (0.25 g/mile), instead of the standards for LDV/LDT1s (0.14 g/mile). A manufacturer choosing this option also must comply with intermediate life SFTP NMHC+NO_X standards determined using the calculation described under paragraph (f)(6)(ii) of this section. A manufacturer choosing this option must comply with the SFTP NMHC+NO_X standard determined under paragraph (f)(6)(ii) not only at intermediate life but also at full useful life and must certify such vehicles to this SFTP NMHC+NO_X standard for a full useful life of 150,000 miles or 15 years, whichever occurs first.

(ii) In Part I of its certification application for model years 2007 through 2009, a manufacturer of diesel LDV/LDT1s must declare which provision it will use (the base Tier 2 provision of paragraphs (f)(1) and (f)(2) of this section or the option described in paragraph (f)(8)(i) of this section).

(g) *Cold temperature exhaust emission standards.* These standards are applicable only to gasoline fueled LDV/Ts and MDPVs. For cold temperature exhaust emission standards, a useful life of 50,000 miles applies.

(1) For LDVs and LDT1s, the standard is 10.0 grams per mile CO.

(2) For LDT2s, LDT3s and LDT4s, and MDPVs the standard is 12.5 grams per mile CO.

(3) These standards do not apply to interim non-Tier 2 MDPVs.

(h) *Certification short test exhaust emission standards.* Certification short test emissions from all gasoline-fueled otto cycle LDV/Ts and MDPVs must not exceed the following standards:

(1) Hydrocarbons: 100 ppm as hexane, for certification and SEA testing; 220 ppm as hexane, for in-use testing.

(2) Carbon monoxide: 0.5% for certification and SEA testing; 1.2% for in-use testing.

(3) These standards do not apply to interim non-Tier 2 MDPVs.

(i) Idle CO standards and references to such standards in this subpart, do not apply to any 2004 or later model year LDV, LDT, or MDPV or to any LDV, LDT or MDPV certified to Tier 2 standards before model year 2004 for purposes of generating early NO_X credits or meeting the requirements of an alternative phase-in schedule that begins prior to the 2004 model year.

(j) *Highway NO_X exhaust emission standard*. The maximum projected NO_X emissions measured on the federal Highway Fuel Economy Test in 40 CFR part 600, subpart B, must not be greater than 1.33 times the applicable FTP NO_X standard to which the manufacturer certifies the test group. Both the projected emissions and the product of the NO_X standard and 1.33 must be rounded to the nearest 0.01 g/mi before being compared. This standard is not applicable to MDPVs.

(k) *Phase-in of the Tier 2 FTP exhaust and evaporative requirements; small volume manufacturer flexibilities*. (1) Manufacturers must comply with the phase-in requirements in Tables S04–7 and S04–8 of this paragraph (k) for the Tier 2 FTP exhaust emission requirements specified in paragraph (c) of this section. Separate phase-in schedules are provided for LDV/LLDTs and for HLDT/MDPVs. These requirements specify the minimum percentage of the manufacturer's LDV/LLDT and HLDT/MDPV U.S. sales, by model year, that must meet the Tier 2 requirements, including the applicable fleet average standard, for their full useful lives. As the terms LDV/LLDT and HLDT/MDVP imply, LDVs and LLDTs must be grouped together to determine compliance with these phase-in requirements and HLDTs and MDPVs must also be grouped together to determine compliance with these phase-in requirements. Tables S04–7 and S04–8 follow:

TABLE S04–7—PHASE-IN PERCENTAGES FOR LDV/LLDT TIER 2 REQUIREMENTS

Model year	Percentage of LDV/LLDTs that must meet tier 2 requirements
2004	25
2005	50
2006	75
2007 and subsequent	100

TABLE S04–8—PHASE-IN PERCENTAGES FOR HLDT/MDPV TIER 2 REQUIREMENTS

ModeL year	Percentage of HLDT/MDPVs that must meet tier 2 requirements
2008	50
2009 and subsequent	100

(2) Manufacturers must also comply with the phase-in requirements in Tables S04–7 and S04–8 of this paragraph (k) for the evaporative emission requirements contained in paragraph (e) of this section.

(3) Manufacturers may opt to use different LDV/LLDTs and HLDT/MDPVs to meet the phase-in requirements for evaporative emissions and FTP exhaust emissions, provided that the manufacturer meets the minimum applicable phase-in requirements in Table S04–7 and Table S04–8 of this paragraph (k) for both FTP exhaust and evaporative emissions. A LDV, LDT or MDPV counted toward compliance with any phase-in requirement for FTP exhaust or evaporative standards, must comply with all applicable Tier 2 exhaust requirements or all applicable evaporative requirements, respectively, described in this section.

(4) LDVs, LDTs and MDPVs not certified to meet the Tier 2 FTP exhaust requirements during model years 2004–2008, as allowed under this subpart, are subject to the provisions of paragraph (l) of this section.

(5) *Provisions for small volume manufacturers* (i) Small volume manufacturers, as defined in this part, are exempt from the Tier 2 LDV/LLDT exhaust and evaporative emissions phase-in requirements for model years 2004, 2005 and 2006 in Table S04–7 of this paragraph (k), but must comply with the 100% requirement for the 2007 and later model

years for exhaust and evaporative emissions. If not complying with Tier 2 requirements during 2004, 2005 and 2006, small volume manufacturers must comply with the requirements for interim non-Tier 2 LDV/LLDTs.

(ii) Small volume manufacturers, as defined in this part, are exempt from the HLDT/MDPV exhaust and evaporative phase-in requirement for model year 2008 in Table S04–8 of this section but must comply with the 100% requirement for the 2009 model year. Small volume manufacturers are also exempt from the HLDT/MDPV interim fleet average NO_X standard (0.20 g/mi) and its phase-in for the 2004, 2005 and 2006 model years.

(iii) Small volume manufacturers must comply with the FTP exhaust emission standards from Tables S04–1 and 2 of paragraph (c) of this section for all HLDT/MDPVs of model years 2004 and later, except that 2004 model year HLDTs may comply with Tier 1 exhaust emission standards subject to the provisions of paragraph (l)(2)(vii) of this section, and 2004 model year MDPVs may comply with heavy-duty vehicle standards subject to the provisions of paragraph (l)(2)(viii) of this section. Small volume manufacturers must also comply with the 0.20 g/mi fleet average NO_X standard for 2007 and 2008 model year HLDT/MDPVs; the Tier 2 0.07 g/mi fleet average NO_X standard for the 2009 and later model year HLDT/MDPVs; and the evaporative emission standards in Table S04–3 of this section for the 2009 and later model years.

(6)(i) A manufacturer may elect an alternate phase-in schedule that results in 100% phase-in for LDV/LLDTs by 2007. Alternate phase-in schedules must produce a sum of at least 250% when the percentages of LDV/LLDTs certified to Tier 2 requirements for each model year from 2001 through 2007 are summed. As an example, a 10/25/50/65/100 percent phase-in that began in 2003 would have a sum of 250 percent and would be acceptable. However, a 10/25/40/70/100 percent phase-in that began the same year would have a sum of 245 percent and would not be acceptable.

(ii) A manufacturer electing this option for LDV/LLDTs may calculate its compliance with the evaporative standards in paragraph (e)(1) of this section separately from its compliance with Tier 2 exhaust standards, provided that the phase-in schedules for each separately produce a sum of at least 250 percent when calculated as described in paragraph (k)(6)(i) of this section. A vehicle counted towards compliance with any phase-in requirement for the Tier 2 exhaust standards or the evaporative standards in paragraph (e)(1) of this section, must comply with all applicable Tier 2 exhaust standards or all evaporative standards, as applicable, described in this section.

(iii) In addition to the requirements of paragraphs (k)(6)(i) and (ii) of this section, except as permitted in paragraph (k)(6)(vii) of this section, a manufacturer of LDV/LLDTs electing to use an alternate phase-in schedule for compliance with the Tier 2 exhaust standards or the evaporative standards in paragraph (e)(1) of this section must ensure that the sum of the percentages of vehicles from model years 2001 through 2004, meeting such exhaust or evaporative standards, as applicable, is at least 25%.

(iv) A manufacturer may elect an alternate phase-in schedule that results in 100% phase-in for HLDT/MDPVs by 2009. The requirements of paragraphs (k)(6)(i) through (k)(6)(ii) of this section apply, except that for HLDT/MDPVs, the calculation described in paragraphs (k)(6)(i) and (k)(6)(ii) of this section may cover model years 2001 through 2009 and must produce a sum of at least 150%.

(v) A manufacturer electing to use any alternate phase-in schedule permitted under this section must provide in its Application for Certification for the first year in which it intends to use such a schedule, and in each succeeding year during the phase-in, the intended phase-in percentages for that model year and the remaining phase-in years along with the intended final sum of those percentages as described in this paragraph (k)(6). This information may be included with the information required under § 86.1844–01(d)(13). In its year end annual reports, as required under § 86.1844–01(e)(4) the manufacturer must include sufficient information so that the Administrator can verify compliance with the alternative

phase-in schedule established under paragraph (k)(6) of this section.

(vi) Under an alternate phase-in schedule, the projected phase-in percentage is not binding for a given model year, provided the sums of the actual phase-in percentages that occur meet the appropriate total sums as required in paragraph (k)(6) of this section, and provided that 100% actual compliance is reached for the appropriate model year, either 2007 or 2009, as described in paragraph (k)(6) of this section.

(vii) A manufacturer unable to meet the 25% requirement in paragraph (k)(6)(iii) of this section, must:

(A) Ensure that the sum of the percentages of vehicles for model years 2001 through 2004, meeting such exhaust or evaporative standards, as applicable, is at least 20%.

(B) Subtract that sum of percentages for model years 2001 through 2004 from 25%, and multiply the unrounded result by 2.

(C) Round the product from paragraph (k)(6)(vii)(B) of this section to the nearest 0.1% and add that to 50%. That sum becomes the required phase-in percentage for the 2005 model year.

(D) Comply with the phase-in percentage for the 2005 model year determined in paragraph (k)(6)(vii)(C) of this section.

(E) Comply with a minimum phase-in percentage for the 2006 model year determined by the following equation:

$$\text{minimum phase-in percentage for 2006} = [75\% - (2005_{\text{api}} - 2005_{\text{rpi}})]$$

Where:

2005_{rpi} = the required phase-in for the 2005 model year as determined in paragraph (k)(6)(vii)(C) of this section; and

2005_{api} = the manufacturer's actual phase-in quantity for the 2005 model year.

(7)(i) Sales percentages for the purpose of determining compliance with the phase-in of the Tier 2 requirements and the phase-in of the evaporative standards in paragraph (e)(1) of this section, must be based upon projected U.S. sales of LDV/LLDTs and HLDT/MDPVs of the applicable model year by the manufacturer to the point of first sale. Such sales percentages must be rounded to the nearest one tenth of a percent, and must not include vehicles and trucks projected to be sold to points of first sale in California or a state that has adopted California requirements for that model year as permitted under section 177 of the Act.

(ii) Alternatively, the manufacturer may petition the Administrator to allow actual volume produced for U.S. sales to be used in lieu of projected U.S. sales for purposes of determining compliance with the phase-in percentage requirements under this section. The manufacturer must submit its petition within 30 days of the end of the model year to the Vehicle Programs and Compliance Division. For EPA to approve the use of actual volume produced for U.S. sales, the manufacturer must establish to the satisfaction of the Administrator, that actual production volume is functionally equivalent to actual sales volume of LDV/LLDTs and HLDT/MDPVs sold in states other than California and states that have adopted California standards.

(iii) Manufacturers must submit information showing compliance with all phase-in requirements of this section with its Part I application as required by § 86.1844(d)(13).

(l) *FTP exhaust standards for interim non-Tier 2 vehicles*—(1) *FTP exhaust emission standards for interim non-Tier 2 LDV/LLDTs.* (i) LDV/LLDTs that are not used to meet the Tier 2 phase-in requirements including the Tier 2 fleet average NO_X requirement during the Tier 2 phase-in period (model years 2004–2006) must comply with the full useful life FTP exhaust emission standards listed in Table S04–1 of paragraph (c) of this section and the corresponding intermediate useful life standards, if any, in Table S04–2 of paragraph (c) of this section. Manufacturers may choose the bin of full useful life standards to which they certify a test group of vehicles, subject to the requirements in paragraph (l)(3)(i) of this section. In a given model year, an individual vehicle may not be used to comply with both the Tier 2 fleet average NO_X standard and the applicable interim fleet average NO_X standard although vehicles from the same test group may be separated and the vehicles counted toward compliance with either program.

(ii) The provisions of paragraphs (c)(1), (2) and (3) of this section apply to flexible-fueled, dual fuel and multi-fuel interim non-Tier 2 LDV/LLDTs.

(iii) Only manufacturers that comply with the applicable FTP standards in Tables S04–1 and 2 of paragraph (c) of this section for all of their 2004 model year HLDTs and declare their intention to comply with the 2004 model year 25% phase-in requirement to the 0.20 g/mi interim fleet average NO_X standard for HLDTs (or HLDT/MDPVs) described in this paragraph (l) may use the optional higher NMOG values for interim LDT2s certified to bin 9 standards that are shown in Tables S04–1 and 2. Manufacturers must declare their intention to comply with the full 2004 model year 25% phase-in requirement in Part I of their HLDT or their HLDT/MDPV, as applicable, certification applications.

(iv) The provisions of paragraph (c)(4) of this section apply to interim non-Tier 2 vehicles.

(2) *FTP exhaust emission standards for interim non-Tier 2 HLDTs and interim non-Tier 2 MDPVs.* (i) Except as permitted under paragraphs (l)(2) (vii) and (viii) of this section, HLDTs and MDPVs of model years 2004–2008 that are not used to meet the Tier 2 FTP phase-in requirements including the Tier 2 fleet average NO_X requirement must comply with the full useful life FTP exhaust emission standards listed in Table S04–1 of paragraph (c) of this section and, the corresponding intermediate useful life standards, if any, in Table S04–2 of paragraph (c) of this section. Manufacturers may choose the bin of full useful life standards to which they certify a test group of vehicles, subject to the requirements in paragraph (l)(3)(ii) of this section.

(ii) Except as permitted under paragraphs (l)(2) (vii) and (viii) of this section, HLDTs and MDPVs of model years 2004–2008 that are not used to meet the Tier 2 FTP phase-in requirements including the Tier 2 fleet average NO_X requirement must comply with the fleet average NO_X standard described in paragraph (l)(3)(ii) of this section subject to the phase-in schedule in paragraph (l)(2)(iv) of this section, i.e. 25 percent of the HLDT and MDPVs must meet the fleet average standard of 0.20 g/mi in 2004, 50 percent in 2005, and so on.

(iii) Manufacturers may choose the bin of full useful life standards and corresponding intermediate life standards to which they certify test groups of HLDTs and MDPVs, subject to the requirements in paragraph (l)(3)(ii) of this section. Manufacturers may include HLDT/MDPVs in the interim program that are not used to meet the Tier 2 fleet average NO_X standard or the phase-in percentage requirements in the Tier 2 program or to generate Tier 2 NO_X credits. In a given model year, an individual vehicle may not be used to comply with both the Tier 2 fleet average NO_X standard and the applicable interim fleet average NO_X standard although vehicles from the same test group may be separated and the vehicles counted toward compliance with either program.

(iv) *Phase-in schedule for interim non-Tier 2 HLDT/MDPVs.* Table S04–9 of this paragraph (l) specifies the minimum percentage of the manufacturer's interim non-Tier 2 HLDT/MDPV U.S. sales, by model year, that must comply with the fleet average NO_X standard described in paragraph (l)(3)(ii) of this section. Table S04–9 follows:

TABLE S04–9—PHASE-IN PERCENTAGES FOR COMPLIANCE WITH INTERIM NON-TIER 2 FLEET AVERAGE NO_X STANDARD FOR HLDT/MDPVS

Model year	Percentage of non-tier 2 HLDT/MDPVs that must meet interim non-tier 2 fleet average NO_X standard
2004	25
2005	50
2006	75
2007 and 2008	100

(v)(A) A manufacturer may elect an alternate phase-in schedule, beginning as early as the 2001 model year, that results in 100% compliance by 2007 with the fleet average NO_X standard for interim non-Tier 2 HLDT/MDPVs described in paragraph (l)(3)(ii) of this section. The requirements of paragraph (k)(6) of this section apply to the selection of an alternate phase-in schedule.

(B) If a manufacturer elects not to bring all of its HLDT/MDPVs into compliance with the interim requirements in 2004 as permitted under paragraphs (l)(2)(vii) and

(viii) of this section, it may still use an alternate phase-in schedule to attain 100% compliance with the interim fleet average NO_X standard for HLDT/MDPVs, but the sum of phase-in percentages it must meet will be 225% rather than 250%. If the manufacturer commences its 2004 model year on or after December 21, 2003, for any HLDT/MDPVs, the manufacturer must increase the 225% by the fraction of its 2004 model year HLDT/MDPVs whose model year commenced on or after that date and which were brought into compliance with the 0.20 g/mi corporate average NO_X standard as required under paragraph (l)(2)(ix) of this section. The manufacturer must ensure that the sum of the percentages of vehicles up through model year 2005 complying with the interim fleet average NO_X standard is at least 50%.

(vi) The provisions of paragraphs (c)(1), (2) and (3) of this section apply to flexible-fueled, dual fuel and multi-fuel interim non-Tier 2 HLDT/MDPVs.

(vii) For 2004 model year HLDT test groups whose model year commences before December 21, 2003, the manufacturer may exempt such HLDTs from compliance with any requirements applicable to interim non-Tier 2 HLDTs, and such HLDTs must be produced in accordance with standards and requirements in §§ 86.1814–02 and §§ 86.1815–02. Such HLDTs must also meet the refueling emission standards contained in paragraph (e)(3) of this section.

(viii) For 2004 model year heavy-duty vehicles whose model year commences before December 21, 2003, the manufacturer may exempt such vehicles from compliance with any requirements applicable to interim non-Tier 2 MDPVs. Exempted vehicles will not be considered MDPVs and must be produced in accordance with standards and requirements in § 86.099–10. Exempted vehicles are also exempted from refueling emission standards.

(ix) For 2004 model year HLDT and MDPV test groups whose model year commences on or after December 21, 2003, the manufacturer must comply with all interim non-Tier 2 requirements in this section.

(A) All such vehicles, but not more than 25% of the manufacturer's total sales of 2004 model year HLDT/MDPVs must meet the interim non-Tier 2 fleet average NO_X standard as described in paragraph (l)(3)(ii) of this section.

(B) All such vehicles but not more than 40% of the manufacturer's 2004 model year HLDT/MDPVs must comply with the refueling requirements in paragraph (e)(3) of this section.

(x) Only those manufacturers that comply with the interim non-Tier 2 FTP standards for all of their 2004 model year HLDTs and declare their intention to comply with the 2004 model year 25% phase-in requirement to the fleet average interim NO_X standard for HLDTs or HLDT/MDPVs of 0.20 g/mi described in paragraph (l) of this section may use the optional higher NMOG values for interim LDT4s certified to bin 10 standards that are shown in Tables S04–1 and 2 of paragraph (c) of this section. Manufacturers must declare their intention to comply with the 2004 model year 25% phase-in requirement in Part I of their HLDT certification applications.

(xi) Only those manufacturers that comply with the interim non-Tier 2 FTP standards for all of their 2004 model year MDPVs, and declare their intention to comply with the 2004 model year 25% phase-in requirement to the fleet average interim NO_X standard for MDPVs or HLDT/MDPVs of 0.20 g/mi described in paragraph (l) of this section may:

(A) Use the exhaust emission standards of bin 11 in Tables S04–1 and S04–2 of paragraph (c) in this section for MDPVs through model year 2008;

(B) For diesel-fueled vehicles, certify the engines in such vehicles, through model year 2007, to provisions in this part 86 applicable to diesel-fueled heavy-duty engines of the appropriate model year. Such diesel fueled vehicles must not be included in any count or determination of compliance with the phase-in requirements applicable to interim non-Tier 2 MDPVs; and

(C) Use the optional higher NMOG values for interim LDT4s certified to bin 10 standards that are shown in Tables S04–1 and 2.

(xii) Manufacturers electing to comply with the provisions of paragraph (l)(2)(xi) of this section must declare their intention to comply with the 2004 model year 25% phase-in requirement to the fleet average interim NO_X standard for MDPVs or HLDT/MDPVs of 0.20 g/mi in Part I of their MDPV certification applications.

(xiii) Where diesel-fueled heavy-duty engines are used as permitted under paragraph (l)(2)(xi)(B) of this section, such engines must be treated as a separate averaging set—MDPV HDDEs—under the averaging, banking and trading provisions applicable to heavy-duty diesel engines. Only NO_X credits generated by engine-certified diesel engines that are used in other MDPVs can be applied to these engines. Manufacturers wishing to average, bank or trade credits for MDPV HDDEs must comply with the requirements in this paragraph and with all requirements applicable to heavy-duty engine averaging, banking and trading in this part.

(3) *Fleet average NO_X standards for interim non-Tier 2 LDV/Ts and MDPVs.* (i) Manufacturers must comply with a fleet average full useful life NO_X standard for their interim non-Tier 2 LDV/LLDTs, on an annual basis, of 0.30 grams per mile.

(ii) Manufacturers must comply with a fleet average full useful life NO_X standard for their interim non-Tier 2 HLDT/MDPVs, excluding those HLDTs and MDPVs not yet covered by the phase-in requirement described in paragraph (l)(2)(ii) of this section, on an annual basis, of 0.20 grams per mile.

(iii) Manufacturers must determine their compliance with these interim fleet average NO_X standards for each model year by separately computing the sales weighted average NO_X level of all interim non-Tier 2 LDV/LLDTs and all interim non-Tier 2 HLDT/MDPVs (excluding those not yet phased in as described in paragraph (l)(2)(ii) of this section), using the methodology in § 86.1860.

(iv) Manufacturers may generate, bank, average, trade and use interim non-Tier 2 NO_X credits based on their NO_X fleet average as determined under paragraph (l)(3)(iii) of this section. Unless waived or modified by the Administrator, the provisions of § 86.1861 of this part apply to the generation, banking, averaging, trading and use of credits generated by interim non-Tier 2 vehicles. NO_X credits generated by interim non-Tier 2 vehicles are not subject to any discount except as required by § 86.1861–04(e).

(m) *NMOG standards for diesel, flexible fueled and dual-fueled LDV/Ts and MDPVs.* (1) For diesel fueled LDV/Ts and MDPVs, the term ''NMOG'' in both the Tier 2 and interim non-Tier 2 standards means non-methane hydrocarbons.

(2) Flexible-fueled and dual-fuel Tier 2 and interim non-Tier 2 vehicles must be certified to NMOG exhaust emission standards both for operation on gasoline and on any alternate fuel they are designed to use. Manufacturers may measure NMHC in lieu of NMOG when flexible-fueled and dual-fuel vehicles are operated on gasoline, subject to the requirements of § 86.1810(p).

(n) *Hybrid electric vehicle (HEV) and Zero Emission Vehicle (ZEV) requirements.* For FTP and SFTP exhaust emissions, and unless otherwise approved by the Administrator, manufacturers must measure emissions from all HEVs and ZEVs according to the requirements and test procedures found in the document entitled California Exhaust Emission Standards and Test Procedures for 2003 and Subsequent Model Zero-Emission Vehicles and 2001 and Subsequent Model Hybrid Electric Vehicles, in the Passenger Car, Light-duty Truck and Medium-duty Vehicle Classes. This document is incorporated by reference (see § 86.1) . Requirements and procedures in this document that are relevant only to complying with the California ZEV mandate, computing partial and full ZEV allowance credits, or generating and using ZEV credits, are not relevant to the federal program and may be disregarded. Discussion in that document relevant to fleet average NMOG standards and NMOG credits may also be disregarded.

(o) *NMOG measurement.* (1) Manufacturers must measure NMOG emissions in accordance with Part G of the California Non-Methane Organic Gas Test Procedures. These requirements are incorporated by reference (see § 86.1).

(2) Manufacturers must not apply reactivity adjustment factors (RAFs) to NMOG measurements. See § 86.1841.

(p) *In-use standards.* (1) Table S04–10 of this paragraph (p) contains in-use emission standards applicable only to vehicles certified to the bins shown in the table. These standards apply to in-use testing performed by the manufacturer pursuant to regulations at §§ 86.1845–01, 86.1845–04 and 86.1846–01 and to in-use testing performed by EPA. These standards do not apply to certification or Selective Enforcement Auditing.

(2) These standards apply only to LDV/LLDTs produced up through the 2008 model year, and HLDT/MDPVs produced up through the 2010 model year. These standards are subject to other limitations described in paragraph (p)(3) of this section.

(3) For the first model year and also for the next model year after that, in which a test group of vehicles is certified to a bin of standards to which it has not previously been certified, the standards in Table S04–10 of this paragraph (p) apply for purposes of in-use testing only. The standards apply equally to all LDV/Ts and MDPVs subject to the model year limitation in paragraph (p)(2) of this section. Table S04–10 follows:

TABLE S04–10—IN-USE COMPLIANCE STANDARDS (G/MI)

[Certification standards shown for reference purposes]

Bin number	Durability period (miles)	NO_X In-use	NO_X certification	NMOG In-use	NMOG certification
5	50,000	0.07	0.05	n/a	0.075
5	120,000	0.10	0.07	n/a	0.090
4	120,000	0.06	0.04	n/a	0.070
3	120,000	0.05	0.03	0.09	0.055
2	120,000	0.03	0.02	0.02	0.010

(4) For diesel vehicles certified to bin 10, separate in-use standards apply for NO_X and PM emissions. These standards are determined by multiplying the applicable NO_X and PM certification standards by factors of 1.2 and 1.35, respectively, and then rounding the result to one more decimal place than contained in the certification standard. The resultant standards do not apply for certification or selective enforcement auditing.

(5) For diesel vehicles certified to bin 7 and bin 8 only in model years 2007 through 2009, a manufacturer may optionally comply with the bin 5 FTP PM standard shown in Table S04–1. For diesel vehicles choosing this option, separate in-use NO_X standards apply at high altitude conditions as defined in § 86.1803–01. These standards are determined by multiplying the applicable NO_X certification standards by a factor of 1.2. The resultant standards apply only in-use at high altitude conditions and do not apply for certification or selective enforcement auditing. A manufacturer choosing this option must certify such vehicles to the applicable FTP NO_X and PM standards for a full useful life of 150,000 miles or 15 years, whichever occurs first. A manufacturer choosing this option would not be allowed to generate additional credits as described under § 86.1860–04 (g).

(q) *Hardship provision for small volume manufacturers.* (1) A small volume manufacturer may apply for relief from any applicable final phase-in model year contained in this section. Relief will only be available to defer required compliance with a completely new set of standards, a fleet average NO_X standard, and/or evaporative emission standard for 100% of affected vehicles for one model year. Thus, a small volume manufacturer that obtains relief may:

(i) Defer 100% compliance with the fleet average NO_X standard for interim LDV/LLDTs (0.30 g/mi) until 2005;

(ii) Defer 100% compliance with the evaporative emission standards and/or fleet average NO_X standard for Tier 2 LDV/LLDTs (0.07 g/mi) until 2008;

(iii) Defer 100% compliance with the requirements that interim HLDTs and MDPVs comply with applicable emission standards shown in Tables S04–1 and S04–2, until 2005;

(iv) Defer 100% compliance with the fleet average NO_X standard for interim HLDT/MDPVs (0.20 g/mi) until 2008; and

(v) Defer 100% compliance with the evaporative emission standards and/or fleet average NO_X standard for Tier 2 HLDT/MDPVs (0.07 g/mi) until 2010.

(2) Applications for relief must be in writing and must:

(i) Be submitted before the earliest date of noncompliance;

(ii) Include evidence that the manufacturer will incur severe economic hardship if relief is not granted;

(iii) Include evidence that the noncompliance will occur despite the best efforts of the manufacturer to comply; and

(iv) Include evidence that the manufacturer has made every reasonable effort to purchase credits to address the noncompliance, where applicable.

(r) *NMOG standard adjustment for direct ozone reducing devices.* (1) A manufacturer may obtain NMOG credit for use in certifying to the exhaust NMOG standards listed in paragraph (c) of this section and for use in complying with the in-use standards of paragraph (p) of this section, where applicable. This credit effectively allows the manufacturer to increase the exhaust NMOG emission standards listed in these paragraphs by the amount of the applicable credit. For example, if the applicable NMOG credit was 0.01 g/mi, and the vehicle was being certified in Bin 5, as described in Table S04–1 of paragraph (c) of this section, exhaust NMOG emissions must be no greater than 0.10 g/mi, as opposed to the normal NMOG certification standard of 0.09 g/mi in Bin 5.

(2) The NMOG credit must be determined through a two-step process.

(i) The first step must determine the ozone reduction potential of the direct ozone reducing device, the ozone reduction potential of exhaust NMOG reductions beyond Bin 5 of the Tier 2 standards, and the ratio of the two methods of reducing ambient ozone levels. The requirements for this step are described in paragraph (r)(3) of this section.

(ii) The second step must demonstrate and certify the relevant performance characteristics of the specific ozone reducing device. The requirements for this step are described in paragraph (r)(4) of this section.

(3) The ozone reduction potential of the direct ozone reducing device and the ozone reduction potential of exhaust NMOG reductions beyond Bin 5 of the Tier 2 standards must be estimated using procedures which are approved by the Administrator in advance. At a minimum:

(i) The modeling must utilize an urban airshed model using up-to-date chemical and meteorological simulation techniques;

(ii) Four local areas must be modeled: New York City, Chicago, Atlanta and Houston;

(iii) The ozone episodes to be modeled must meet the selection criteria established by EPA for State ozone SIPs;

(iv) Photochemical and dispersion modeling must follow that used by EPA to project the ozone impacts of this rule, or its equivalent;

(v) Emission projections must be made for calendar year 2007 and be consistent with those used by EPA in support of this final rule, or reflect updates approved by EPA;

(vi) Baseline emissions (emissions prior to use of the direct ozone reducing device or the VOC emission reductions) must include the benefits of the Tier 2 emission and sulfur standards; as well as all other emission controls assumed in EPA's ozone modeling of the benefits of the Tier 2 and sulfur standards, as described in the Final Regulatory Impact Analysis to the Tier 2 and Sulfur Rule;

(vii) The ozone benefit of the direct ozone reducing device must assume a radiator area of 0.29 square meters, an air flow velocity through the radiator of 40% of vehicle speed, and an ozone reduction efficiency of 80%, or other values as approved by the Administrator;

(viii) The ozone level of the air entering the direct ozone reducing device must be assumed to be 40% less than that existing in the grid cell where the vehicle is located;

(ix) The ozone benefit of VOC emission reductions must be modeled by assuming that all Tier 2 LDVs, LDTs and MDPVs meet an exhaust NMOG standard of 0.055 g/mi or lower instead of a 0.09 g/mi NMOG standard;

(x) The ozone reducing device must be assumed to be present on all of the Tier 2 LDVs, LDTs and MDPVs modeled as meeting the more stringent NMOG standard described in paragraph (r)(3)(ix) of this section;

(xi) The relationship between changes in exhaust NMOG emission standards and in-use VOC emissions must be determined sufficiently far in the future to ensure that the change in ozone being modeled is sufficiently large to allow comparison with the impact of the ozone reducing device;

(xii) LDV, LDT and MDPV emissions must be modeled using the updated Tier 2 emission model developed by EPA as part of the Tier 2 rulemaking (available from EPA upon request) or MOBILE6, once this model is available;

(xiii) The ozone benefit of the direct ozone reducing device must be the reduction in the peak one-hour ozone level anywhere in the modeled region on the day when ozone is at its highest;

(xiv) The NMOG credit in each local area must be the reduction in peak one hour ozone associated with use of the direct ozone reducing device divided by the reduction in peak one hour ozone associated with the more stringent exhaust NMOG emission standard multiplied by the reduction the exhaust NMOG standard (in g/mi) modeled in paragraph (r)(3)(ix) of this section; and

(xv) The NMOG credit applicable to the generic direct ozone reducing device modeled in paragraph (r)(3)(vii) of this section must be determined by arithmetically averaging the NMOG credit determined in paragraph (r)(3)(xiv) of this section for each of the four local areas.

(4) The manufacturer must submit data, using procedures which have been approved by the Administrator in advance, that demonstrate the following aspects of the device being certified:

(i) The air flowrate through the device as a function of vehicle speed;

(ii) The ozone reduction efficiency of the device over the useful life of the vehicle for a range of vehicle speeds and ozone levels;

(iii) The method through which the onboard diagnostic system will detect improper performance.

(5) The NMOG credit for the specific application of this technology tested under the provisions of paragraph (r)(4) of this section is the four-area NMOG credit determined in paragraph (r)(3)(xv) of this section scaled based on the performance of the specific application tested under the provisions of paragraph (r)(4) of this section relative to those assumed in paragraph (r)(3)(vii) of this section. This scaling must assume a linear relationship between the NMOG credit and three aspects of the direct ozone reducing device: radiator area, average air flow through the radiator relative to vehicle speed, and ozone reduction efficiency and the NMOG credit. The NMOG credit must be rounded to the nearest 0.001 g/mi. For example, if the NMOG credit determined in paragraph (r)(3)(xv) of this section was 0.01 g/mi and the specific direct ozone reducing device being certified had an area of 0.20 square meters, an air flow velocity of 30% of vehicle speed and an ozone reducing efficiency of 70%, and the generic ozone reducing device simulated in the ozone model under paragraph (r)(3)(vii) of this section had an area of 0.29 square meters, an air flow velocity of 40% of vehicle speed and an ozone reducing efficiency of 80%, the NMOG credit applicable to the specific device being certified would be:

0.01 g/mi * (0.20/0.29) * (30%/40%) * 70%/80%) = 0.005

(s) Manufacturers may request to group heavy-duty vehicles into the same test group as other vehicles subject to more stringent standards, so long as all vehicles in the test group meet the most stringent standards applicable to any vehicle within that test group, as provided at § 86.1827–1(a)(5) and (d)(4).

[65 FR 6854, Feb. 10, 2000; 65 FR 10598, Feb. 28, 2000, as amended at 65 FR 59970, Oct. 6, 2000; 66 FR 19309, Apr. 13, 2001; 67 FR 72825, Dec. 6, 2002; 70 FR 40443, July 13, 2005; 71 FR 16060, Mar. 30, 2006]

§ 86.1812–01 Emission standards for light-duty trucks 1.

This section applies to 2001 and later model year light-duty truck 1's fueled by gasoline, diesel, methanol, natural gas and liquefied petroleum gas fuels except as noted. Multi-fueled vehicles shall comply with all requirements established for each consumed fuel. For

methanol fueled vehicles, references in this section to total hydrocarbons shall mean total hydrocarbon equivalents and references to non-methane hydrocarbons shall mean non-methane hydrocarbon equivalents. This section does not apply to 2004 and later model year vehicles, except as specifically referenced by § 86.1811–04.

(a) *Exhaust emission standards.* (1) Exhaust emissions shall not exceed the following standards at intermediate useful life:

(i) [Reserved]

(ii) Non-methane hydrocarbons: 0.25 grams per mile.

(iii) Carbon monoxide: 3.4 grams per mile.

(iv) Oxides of nitrogen: 0.4 grams per mile except diesel fuel which have a 1.0 gram per mile standard.

(v) Particulate matter: 0.08 grams per mile.

(2) Exhaust emissions from 2001 and later model year light-duty truck 1's shall not exceed the following standards at full useful life:

(i) Total hydrocarbons: 0.80 grams per mile, except natural gas, which has no standard. For purposes of this section, the full useful life total hydrocarbon standard is for 11 years or 120,000 miles whichever occurs first.

(ii) Non-methane hydrocarbons: 0.31 grams per mile.

(iii) Carbon monoxide: 4.2 grams per mile.

(iv) Oxides of nitrogen: 0.6 grams per mile except diesel fuel which have a 1.25 gram per mile standard.

(v) Particulate matter: 0.10 grams per mile.

(b) *Supplemental exhaust emission standards.* (1) Supplemental exhaust emissions from gasoline-fueled and diesel-fueled light-duty truck 1's shall not exceed the following standards at intermediate useful life:

(i) Nonmethane hydrocarbon and oxides of nitrogen composite: 0.65 grams per mile except diesel fuel which have a 1.48 gram per mile standard.

(ii) *Carbon monoxide.* Regulated vehicles shall meet at least one of the following two sets of standards:

(A) *Individual US06 and SC03 Air Conditioning compliance.* Comply with both the following standards:

(*1*) 3.0 grams per mile on the A/C test, not applicable to diesel fueled vehicles; and

(*2*) 9.0 grams per mile on the US06 test; or

(B) *Composite Carbon Monoxide Standard:* 3.4 grams per mile.

(2) Supplemental exhaust emissions from gasoline-fueled and diesel-fueled light-duty vehicles shall not exceed the following standards at full useful life:

(i) Nonmethane hydrocarbon and oxides of nitrogen composite: 0.91 grams per mile except diesel fuel which have a 2.07 gram per mile standard.

(ii) *Carbon monoxide.* Regulated vehicles shall meet at least one of the following two sets of standards:

(A) *Individual US06 and SC03 Air Conditioning compliance.* Comply with both the following standards:

(*1*) 3.7 grams per mile on the A/C test, not applicable to diesel fueled vehicles; and

(*2*) 11.1 grams per mile on the US06 test; or

(B) *Composite Carbon Monoxide Standard:* 4.2 grams per mile.

(c) *Cold temperature emission standards.* Exhaust emissions from gasoline-fueled light-duty truck 1's with a loaded vehicle weight of 3,750 lbs or less shall not exceed the cold temperature CO standard of 10.0 grams carbon monoxide per mile for an intermediate useful life of 50,000 miles.

(d) *Evaporative emissions.* Evaporative emissions from gasoline-fueled, natural gas-fueled, liquefied petroleum gas-fueled, and methanol-fueled light-duty truck 1's shall not exceed the following standards. The standards apply equally to certification and in-use vehicles. The spitback standard also applies to newly assembled vehicles.

(1) *Hydrocarbons.* (i) For the full three-diurnal test sequence, diurnal plus hot soak measurements: 2.0 grams per test.

(ii) *Gasoline and methanol fuel only.* For the supplemental two-diurnal test sequence, diurnal plus hot soak measurements: 2.5 grams per test.

(iii) *Gasoline and methanol fuel only.* Running loss test: 0.05 grams per mile.

(iv) *Gasoline and methanol fuel only.* Fuel dispensing spitback test: 1.0 grams per test.

(2) [Reserved]

(e) *Refueling emissions.* Refueling emissions from light-duty truck 1's shall be phased in, in accordance with the schedule in table S01–4 of § 86.1810–01 not to exceed the following emission standards:

(1) For gasoline-fueled, diesel-fueled and methanol-fueled vehicles: 0.20 grams hydrocarbon per gallon (0.053 gram per liter) of fuel dispensed.

(2) For liquefied petroleum gas-fueled vehicles: 0.15 grams hydrocarbon per gallon (0.04 gram per liter) of fuel dispensed.

(f) *Certification short test.* Certification short test emissions from gasoline-fueled Otto-cycle light-duty trucks shall not exceed the following standards:

(1) Hydrocarbons: 100 ppm as hexane.

(2) Carbon monoxide: 0.5%.

(g) *Idle exhaust emission standards.* Exhaust emissions of carbon monoxide from gasoline, methanol, natural gas- and liquefied petroleum gas-fueled light-duty trucks shall not exceed 0.50 percent of exhaust gas flow at curb idle for a useful life of 11 years or 120,000 miles, whichever first occurs.

(h) Manufacturers may request to group light-duty truck 1's into the same test group as vehicles subject to more stringent standards, so long as those light-duty truck 1's meet the most stringent standards applicable to any vehicle within that test group, as provided at § 86.1827(a)(5) and (d)(4).

[64 FR 23925, May 4, 1999, as amended at 65 FR 6863, Feb. 10, 2000; 65 FR 59970, Oct. 6, 2000]

§ 86.1813–01 Emission standards for light-duty trucks 2.

This section applies to 2001 and later model year light-duty truck 2's fueled by gasoline, diesel, methanol, natural gas and liquefied petroleum gas fuels except as noted. Multi-fueled vehicles shall comply with all requirements established for each consumed fuel. For methanol fueled vehicles, references in this section to total hydrocarbons shall mean total hydrocarbon equivalents and references to non-methane hydrocarbons shall mean non-methane hydrocarbon equivalents. This section does not apply to 2004 and later model year vehicles, except as specifically referenced by § 86.1811–04.

(a) *Exhaust emissions.* (1) Exhaust emissions shall not exceed the following standards at intermediate useful life:

(i) [Reserved]

(ii) Non-methane hydrocarbons: 0.32 grams per mile.

(iii) Carbon monoxide: 4.4 grams per mile.

(iv) Oxides of nitrogen: 0.7 grams per mile except diesel fueled vehicles which have no standard.

(v) Particulate matter: 0.08 grams per mile.

(2) Exhaust emissions shall not exceed the following standards at full useful life:

(i) Total hydrocarbons: 0.80 grams per mile, except natural gas, which has no standard. For purposes of this section, the full useful life total hydrocarbon standard is for 11 years or 120,000 miles whichever occurs first.

(ii) Non-methane hydrocarbons: 0.40 grams per mile.

(iii) Carbon monoxide: 5.5 grams per mile.

(iv) Oxides of nitrogen: 0.97 grams per mile.

(v) Particulate matter: 0.10 grams per mile.

(b) *Supplemental exhaust emissions.* (1) Supplemental exhaust emissions from gasoline-fueled light-duty truck 2's shall not exceed the following standards at intermediate useful life:

(i) Nonmethane hydrocarbon and oxides of nitrogen composite: 1.02 grams per mile.

(ii) *Carbon monoxide.* Regulated vehicles shall meet at least one of the following two sets of standards:

(A) *Individual US06 and SC03 Air Conditioning compliance.* Comply with both the following standards:

(*1*) 3.9 grams per mile on the A/C test, not applicable to diesel fueled vehicles; and

(*2*) 11.6 grams per mile on the US06 test; or

(B) *Composite Carbon Monoxide Standard:* 4.4 grams per mile.

(2) Supplemental exhaust emissions from gasoline-fueled light-duty truck 2's shall not exceed the following standards at full useful life:

(i) Nonmethane hydrocarbon and oxides of nitrogen composite: 1.37 grams per mile.

(ii) *Carbon monoxide*. Regulated vehicles shall meet at least one of the following two sets of standards:

(A) *Individual US06 and SC03 Air Conditioning compliance*. Comply with both the following standards:

(*1*) 4.9 grams per mile on the A/C test, not applicable to diesel fueled vehicles; and

(*2*) 14.6 grams per mile on the US06 test; or

(B) *Composite Carbon Monoxide Standard:* 5.5 grams per mile.

(c) *Cold temperature emission standards*. Exhaust emissions from gasoline-fueled light-duty truck 2's during cold temperature testing shall not exceed a cold temperature CO standard of 12.5 grams per mile for an intermediate useful life of 50,000 miles.

(d) *Evaporative emissions*. Evaporative emissions from gasoline-fueled, natural gas-fueled, liquefied petroleum gas-fueled, and methanol-fueled light-duty truck 2's shall not exceed the following standards. The standards apply equally to certification and in-use vehicles. The spitback standard also applies to newly assembled vehicles.

(1) *Hydrocarbons (Total Hydrocarbon Equivalent for methanol-fueled)*. (i) For the full three-diurnal test sequence, diurnal plus hot soak measurements: 2.0 grams per test.

(ii) *Gasoline and methanol fuel only*. For the supplemental two-diurnal test sequence, diurnal plus hot soak measurements: 3.0 grams per test.

(iii) *Gasoline and methanol fuel only*. Running loss test: 0.05 grams per mile.

(iv) *Gasoline and methanol fuel only*. Fuel dispensing spitback test: 1.0 grams per test.

(2) [Reserved]

(e) *Refueling emissions*. Refueling emissions from light-duty truck 2's shall be phased in, in accordance with the schedule in table S01–4 of § 86.1810–01 not to exceed the following emission standards:

(1) For gasoline-fueled, diesel-fueled and methanol-fueled vehicles: 0.20 grams hydrocarbon per gallon (0.053 gram per liter) of fuel dispensed.

(2) For liquefied petroleum gas-fueled vehicles: 0.15 grams hydrocarbon per gallon (0.04 gram per liter) of fuel dispensed.

(f) *Certification short test*. Certification short test emissions from gasoline-fueled Otto-cycle light-duty vehicles and light-duty trucks shall not exceed the following standards:

(1) Hydrocarbons: 100 ppm as hexane.

(2) Carbon monoxide: 0.5%.

(g) *Idle exhaust emission standards, light-duty trucks*. Exhaust emissions of carbon monoxide from 2001 and later model year gasoline, methanol, natural gas- and liquefied petroleum gas-fueled light-duty trucks shall not exceed 0.50 percent of exhaust gas flow at curb idle for a useful life of 11 years or 120,000 miles, whichever first occurs.

(h) Manufacturers may request to group light-duty truck 2's into the same test group as vehicles subject to more stringent standards, so long as those light-duty truck 2's meet the most stringent standards applicable to any vehicle within that test group, as provided at § 86.1827(a)(5) and (d)(4).

[64 FR 23925, May 4, 1999, as amended at 65 FR 6863, Feb. 10, 2000; 65 FR 59970, Oct. 6, 2000]

§ 86.1814–01 Emission standards for light-duty trucks 3.

This section applies to 2001 and later model year light-duty truck 3's fueled by gasoline, diesel, methanol, natural gas and liquefied petroleum gas fuels except as noted. Multi-fueled vehicles shall comply with all requirements established for each consumed fuel. For methanol fueled vehicles, references in this section to total hydrocarbons shall mean total hydrocarbon equivalents and references to non-methane hydrocarbons shall mean non-methane hydrocarbon equivalents.

(a) *Exhaust emission standards*. (1) Exhaust emissions shall not exceed the following standards at intermediate useful life:

(i) [Reserved]

(ii) Non-methane hydrocarbons: 0.32 grams per mile.

(iii) Carbon monoxide: 4.4 grams per mile.

(iv) Oxides of nitrogen: 0.7 grams per mile except diesel-fueled vehicles which have no standard.

(v) [Reserved]

(2) Exhaust emissions from 2001 and later model year light-duty truck 3's

shall not exceed the following standards at full useful life:

(i) Total hydrocarbons: 0.80 grams per mile except natural gas fueled vehicles which has no total hydrocarbon standard.

(ii) Non-methane hydrocarbons: 0.46 grams per mile.

(iii) Carbon monoxide: 6.4 grams per mile.

(iv) Oxides of nitrogen: 0.98 grams per mile.

(v) Particulate matter: 0.10 grams per mile.

(b) [Reserved]

(c) *Cold temperature emission standards.* Exhaust emissions from gasoline-fueled light-duty truck 3's shall not exceed the cold temperature CO standard of 12.5 grams per mile for an intermediate useful life of 50,000 miles.

(d) *Evaporative emissions.* Evaporative emissions from gasoline-fueled, natural gas-fueled, liquefied petroleum gas-fueled, and methanol-fueled light-duty truck 3's shall not exceed the following standards. The standards apply equally to certification and in-use vehicles. The spitback standard also applies to newly assembled vehicles.

(1) Hydrocarbons for gasoline and methanol light-duty trucks with a nominal fuel tank capacity of 30 gallons or more shall not exceed the following standards:

(i) For the full three-diurnal test sequence, diurnal plus hot soak measurements: 2.5 grams per test.

(ii) *Gasoline and methanol fuel only.* For the supplemental two-diurnal test sequence, diurnal plus hot soak measurements: 3.0 grams per test.

(iii) *Gasoline and methanol fuel only.* Running loss test: 0.05 grams per mile.

(iv) *Gasoline and methanol fuel only.* Fuel dispensing spitback test: 1.0 grams per test.

(2) Hydrocarbons for gasoline and methanol light-duty trucks with a nominal fuel tank capacity of less than 30 gallons shall not exceed the following standards:

(i) For the full three-diurnal test sequence, diurnal plus hot soak measurements: 2.0 grams per test.

(ii) *Gasoline and methanol fuel only.* For the supplemental two-diurnal test sequence, diurnal plus hot soak measurements: 2.5 grams per test.

(iii) *Gasoline and methanol fuel only.* Running loss test: 0.05 grams per mile.

(iv) *Gasoline and methanol fuel only.* Fuel dispensing spitback test: 1.0 grams per test.

(e) [Reserved]

(f) *Certification short test.* Certification short test emissions from gasoline-fueled Otto-cycle light-duty vehicles and light-duty trucks shall not exceed the following standards:

(1) Hydrocarbons: 100 ppm as hexane.

(2) Carbon monoxide: 0.5%.

(g) *Idle exhaust emission standards.* Exhaust emissions of carbon monoxide from 2001 and later model year gasoline, methanol, natural gas-and liquefied petroleum gas-fueled light-duty trucks shall not exceed 0.50 percent of exhaust gas flow at curb idle for a useful life of 11 years or 120,000 miles, whichever first occurs.

(h) Manufacturers may request to group light-duty truck 3's into the same test group as vehicles subject to more stringent standards, so long as those light-duty truck 3's meet the most stringent standards applicable to any vehicle within that test group, as provided at § 86.1827(a)(5) and (d)(4).

[64 FR 23925, May 4, 1999, as amended at 65 FR 59970, Oct. 6, 2000]

§ 86.1814–02 Emission standards for light-duty trucks 3.

This section applies to 2002 and later model year light-duty truck 3's fueled by gasoline, diesel, methanol, natural gas and liquefied petroleum gas fuels except as noted. Multi-fueled vehicles shall comply with all requirements established for each consumed fuel. For methanol fueled vehicles, references in this section to total hydrocarbons shall mean total hydrocarbon equivalents and references to non-methane hydrocarbons shall mean non-methane hydrocarbon equivalents. This section does not apply to 2004 and later model year vehicles, except as specifically referenced by § 86.1811–04.

(a) *Exhaust emission standards.* (1) Exhaust emissions shall not exceed the following standards at intermediate useful life:

(i) [Reserved]

(ii) Non-methane hydrocarbons: 0.32 grams per mile.

(iii) Carbon monoxide: 4.4 grams per mile.

(iv) Oxides of nitrogen: 0.7 grams per mile except diesel-fueled vehicles which have no standard.

(v) [Reserved]

(2) Exhaust emissions from 2001 and later model year light-duty truck 3's shall not exceed the following standards at full useful life:

(i) Total hydrocarbons: 0.80 grams per mile except natural gas fueled vehicles which have no total hydrocarbon standard.

(ii) Non-methane hydrocarbons: 0.46 grams per mile.

(iii) Carbon monoxide: 6.4 grams per mile.

(iv) Oxides of nitrogen: 0.98 grams per mile.

(v) Particulate matter: 0.10 grams per mile.

(b) *Supplemental exhaust emissions.* (1) Supplemental exhaust emissions for 2002 and later model year gasoline-fueled light-duty truck 3's shall not exceed the following standards at intermediate useful life:

(i) Non-methane hydrocarbon and oxides of nitrogen composite: 1.02 grams per mile.

(ii) *Carbon monoxide.* Regulated vehicles shall meet at least one of the following two sets of standards:

(A) *Individual US06 and SC03 Air Conditioning compliance.* Comply with both the following standards:

(*1*) 3.9 grams per mile on the A/C test, not applicable to diesel fueled vehicles; and

(*2*) 11.6 grams per mile on the US06 test; or

(B) *Composite Carbon Monoxide Standard:* 4.4 grams per mile.

(2) Supplemental exhaust emissions from 2002 and later model year gasoline-fueled light-duty truck 3's shall not exceed the following standards at full useful life:

(i) Non-methane hydrocarbon and oxides of nitrogen composite: 1.44 grams per mile.

(ii) *Carbon monoxide.* Regulated vehicles shall meet at least one of the following two sets of standards:

(A) *Individual US06 and SC03 Air Conditioning compliance.* Comply with both the following standards:

(*1*) 5.6 grams per mile on the A/C test, not applicable to diesel fueled vehicles; and

(*2*) 16.9 grams per mile on the US06 test; or

(B) *Composite Carbon Monoxide Standard:* 6.4 grams per mile.

(c) *Cold temperature emission standards.* Exhaust emissions from gasoline-fueled light-duty truck 3's shall not exceed the cold temperature CO standard of 12.5 grams per mile for an intermediate useful life of 50,000 miles.

(d) *Evaporative emissions.* Evaporative emissions from gasoline-fueled, natural gas-fueled, liquefied petroleum gas-fueled, and methanol-fueled light-duty truck 3's shall not exceed the following standards. The standards apply equally to certification and in-use vehicles. The spitback standard also applies to newly assembled vehicles.

(1) Hydrocarbons for gasoline and methanol light-duty trucks with a nominal fuel tank capacity of 30 gallons or more shall not exceed the following standards:

(i) For the full three-diurnal test sequence, diurnal plus hot soak measurements: 2.5 grams per test.

(ii) *Gasoline and methanol fuel only.* For the supplemental two-diurnal test sequence, diurnal plus hot soak measurements: 3.0 grams per test.

(iii) *Gasoline and methanol fuel only.* Running loss test: 0.05 grams per mile.

(iv) *Gasoline and methanol fuel only.* Fuel dispensing spitback test: 1.0 grams per test.

(2) Hydrocarbons for gasoline and methanol light-duty trucks with a nominal fuel tank capacity of less than 30 gallons shall not exceed the following standards:

(i) For the full three-diurnal test sequence, diurnal plus hot soak measurements: 2.0 grams per test.

(ii) *Gasoline and methanol fuel only.* For the supplemental two-diurnal test sequence, diurnal plus hot soak measurements: 2.5 grams per test.

(iii) *Gasoline and methanol fuel only.* Running loss test: 0.05 grams per mile.

(iv) *Gasoline and methanol fuel only.* Fuel dispensing spitback test: 1.0 grams per test.

(e) [Reserved]

(f) *Certification short test.* Certification short test emissions from gasoline-fueled Otto-cycle light-duty vehicles and light-duty trucks shall not exceed the following standards:

(1) Hydrocarbons: 100 ppm as hexane.

(2) Carbon monoxide: 0.5%.

(g) *Idle exhaust emission standards.* Exhaust emissions of carbon monoxide from 2001 and later model year gasoline, methanol, natural gas- and liquefied petroleum gas-fueled light-duty trucks shall not exceed 0.50 percent of exhaust gas flow at curb idle for a useful life of 11 years or 120,000 miles, whichever first occurs.

(h) Manufacturers may request to group light-duty truck 3's into the same test group as vehicles subject to more stringent standards, so long as those light-duty truck 3's meet the most stringent standards applicable to any vehicle within that test group, as provided at § 86.1827(a)(5) and (d)(4).

[64 FR 23925, May 4, 1999, as amended at 65 FR 6863, Feb. 10, 2000; 65 FR 59970, Oct. 6, 2000]

§ 86.1815–01 Emission standards for light-duty trucks 4.

This section applies to 2001 and later model year light-duty truck 4's fueled by gasoline, diesel, methanol, natural gas and liquefied petroleum gas fuels except as noted. Multi-fueled vehicles shall comply with all requirements established for each consumed fuel. For methanol fueled vehicles, references in this section to total hydrocarbons shall mean total hydrocarbon equivalents and references to non-methane hydrocarbons shall mean non-methane hydrocarbon equivalents.

(a) *Exhaust emission standards.* (1) Exhaust emissions from light-duty truck 4's shall not exceed the following standards at intermediate useful life:

(i) [Reserved]

(ii) Non-methane hydrocarbons: 0.39 grams per mile.

(iii) Carbon monoxide: 5.0 grams per mile.

(iv) Oxides of nitrogen: 1.1 grams per mile except diesel fueled vehicles which have no standard.

(v) [Reserved]

(2) Exhaust emissions shall not exceed the following standards at full useful life:

(i) Total hydrocarbons: 0.80 grams per mile except natural gas fuel which has no total hydrocarbon standard.

(ii) Non-methane hydrocarbons: 0.56 grams per mile.

(iii) Carbon monoxide: 7.3 grams per mile.

(iv) Oxides of nitrogen: 1.53 grams per mile.

(v) Particulate matter: 0.12 grams per mile.

(b) [Reserved]

(c) *Cold temperature emission standards.* Exhaust emissions from gasoline-fueled light-duty truck 4's shall not exceed the cold temperature CO standard of 12.5 grams per mile for an intermediate useful life of 50,000 miles.

(d) *Evaporative emissions.* Evaporative emissions from gasoline-fueled, natural gas-fueled, liquefied petroleum gas-fueled, and methanol-fueled light-duty truck 4's shall not exceed the following standards. The standards apply equally to certification and in-use vehicles. The spitback standard also applies to newly assembled vehicles.

(1) Hydrocarbons for gasoline and methanol light-duty trucks with a nominal fuel tank capacity of 30 gallons or more shall not exceed the following standards:

(i) For the full three-diurnal test sequence, diurnal plus hot soak measurements: 2.5 grams per test.

(ii) *Gasoline and methanol fuel only.* For the supplemental two-diurnal test sequence, diurnal plus hot soak measurements: 3.0 grams per test.

(iii) *Gasoline and methanol fuel only.* Running loss test: 0.05 grams per mile.

(iv) *Gasoline and methanol fuel only.* Fuel dispensing spitback test: 1.0 grams per test.

(2) Hydrocarbons for gasoline and methanol light-duty trucks with a nominal fuel tank capacity of less than 30 gallons shall not exceed the following standards:

(i) For the full three-diurnal test sequence, diurnal plus hot soak measurements: 2.0 grams per test.

(ii) *Gasoline and methanol fuel only.* For the supplemental two-diurnal test sequence, diurnal plus hot soak measurements: 2.5 grams per test.

(iii) *Gasoline and methanol fuel only.* Running loss test: 0.05 grams per mile.

(iv) *Gasoline and methanol fuel only.* Fuel dispensing spitback test: 1.0 grams per test.

(e) [Reserved]

(f) *Certification short test.* Certification short test emissions from gasoline-fueled Otto-cycle light-duty vehicles and light-duty trucks shall not exceed the following standards:

(1) Hydrocarbons: 100 ppm as hexane.

(2) Carbon monoxide: 0.5%.

(g) *Idle exhaust emission standards, light-duty trucks.* Exhaust emissions of carbon monoxide from gasoline, methanol, natural gas- and liquefied petroleum gas-fueled light-duty trucks shall not exceed 0.50 percent of exhaust gas flow at curb idle for a useful life of 11 years or 120,000 miles, whichever occurs first.

(h) Manufacturers may request to group light-duty truck 4's into the same test group as vehicles subject to more stringent standards, so long as those light-duty truck 4's meet the most stringent standards applicable to any vehicle within that test group, as provided at § 86.1827(a)(5) and (d)(4).

[64 FR 23925, May 4, 1999, as amended at 65 FR 59970, Oct. 6, 2000]

§ 86.1815–02 Emission standards for light-duty trucks 4.

This section applies to 2002 and later model year light-duty truck 4's fueled by gasoline, diesel, methanol, natural gas and liquefied petroleum gas fuels except as noted. Multi-fueled vehicles shall comply with all requirements established for each consumed fuel. For methanol fueled vehicles, references in this section to total hydrocarbons shall mean total hydrocarbon equivalents and references to non-methane hydrocarbons shall mean non-methane hydrocarbon equivalents. This section does not apply to 2004 and later model year vehicles, except as specifically referenced by § 86.1811–04.

(a) *Exhaust emission standards.* (1) Exhaust emissions from light-duty truck 4's shall not exceed the following standards at intermediate useful life:

(i) [Reserved]

(ii) Non-methane hydrocarbons: 0.39 grams per mile.

(iii) Carbon monoxide: 5.0 grams per mile.

(iv) Oxides of nitrogen: 1.1 grams per mile except diesel fueled vehicles which have no standard.

(v) [Reserved]

(2) Exhaust emissions shall not exceed the following standards at full useful life:

(i) Total hydrocarbons: 0.80 grams per mile except natural gas fuel which has no total hydrocarbon standard.

(ii) Non-methane hydrocarbons: 0.56 grams per mile.

(iii) Carbon monoxide: 7.3 grams per mile.

(iv) Oxides of nitrogen: 1.53 grams per mile.

(v) Particulate matter: 0.12 grams per mile.

(b) *Supplemental exhaust emissions.* (1) Supplemental exhaust emissions from gasoline-fueled light-duty truck 4's shall not exceed the following standards at intermediate useful life:

(i) Non-methane hydrocarbon and oxides of nitrogen composite: 1.49 grams per mile.

(ii) *Carbon monoxide.* Regulated vehicles shall meet at least one of the following two sets of standards:

(A) *Individual US06 and SC03 Air Conditioning compliance.* Comply with both the following standards:

(*1*) 4.4 grams per mile on the A/C test, not applicable to diesel fueled vehicles; and

(*2*) 13.2 grams per mile on the US06 test; or

(B) *Composite Carbon Monoxide Standard:* 5.0 grams per mile.

(2) Supplemental exhaust emissions from gasoline-fueled light-duty truck 4's shall not exceed the following standards at full useful life:

(i) Nonmethane hydrocarbon and oxides of nitrogen composite: 2.09 grams per mile.

(ii) *Carbon monoxide.* Regulated vehicles shall meet at least one of the following two sets of standards:

(A) *Individual US06 and SC03 Air Conditioning compliance.* Comply with both the following standards:

(*1*) 6.4 grams per mile on the A/C test, not applicable to diesel fueled vehicles; and

(*2*) 19.3 grams per mile on the US06 test; or

(B) *Composite Carbon Monoxide Standard:* 7.3 grams per mile.

(c) *Cold temperature emission standards*. Exhaust emissions from gasoline-fueled light-duty truck 4's shall not exceed the cold temperature CO standard of 12.5 grams per mile for an intermediate useful life of 50,000 miles.

(d) *Evaporative emissions*. Evaporative emissions from gasoline-fueled, natural gas-fueled, liquefied petroleum gas-fueled, and methanol-fueled light-duty truck 4's shall not exceed the following standards. The standards apply equally to certification and in-use vehicles. The spitback standard also applies to newly assembled vehicles.

(1) Hydrocarbons for gasoline and methanol light-duty trucks with a nominal fuel tank capacity of 30 gallons or more shall not exceed the following standards:

(i) For the full three-diurnal test sequence, diurnal plus hot soak measurements: 2.5 grams per test.

(ii) *Gasoline and methanol fuel only*. For the supplemental two-diurnal test sequence, diurnal plus hot soak measurements: 3.0 grams per test.

(iii) *Gasoline and methanol fuel only*. Running loss test: 0.05 grams per mile.

(iv) *Gasoline and methanol fuel only*. Fuel dispensing spitback test: 1.0 grams per test.

(2) Hydrocarbons for gasoline and methanol light-duty trucks with a nominal fuel tank capacity of less than 30 gallons shall not exceed the following standards:

(i) For the full three-diurnal test sequence, diurnal plus hot soak measurements: 2.0 grams per test.

(ii) *Gasoline and methanol fuel only*. For the supplemental two-diurnal test sequence, diurnal plus hot soak measurements: 2.5 grams per test.

(iii) *Gasoline and methanol fuel only*. Running loss test: 0.05 grams per mile.

(iv) *Gasoline and methanol fuel only*. Fuel dispensing spitback test: 1.0 grams per test.

(e) [Reserved]

(f) *Certification short test*. Certification short test emissions from gasoline-fueled Otto-cycle light-duty vehicles and light-duty trucks shall not exceed the following standards:

(1) Hydrocarbons: 100 ppm as hexane.

(2) Carbon monoxide: 0.5%.

(g) *Idle exhaust emission standards, light-duty trucks*. Exhaust emissions of carbon monoxide from gasoline, methanol, natural gas- and liquefied petroleum gas-fueled light-duty trucks shall not exceed 0.50 percent of exhaust gas flow at curb idle for a useful life of 11 years or 120,000 miles, whichever occurs first.

(h) Manufacturers may request to group light-duty truck 4's into the same test group as vehicles subject to more stringent standards, so long as those light-duty truck 4's meet the most stringent standards applicable to any vehicle within that test group, as provided at § 86.1827(a)(5) and (d)(4).

[64 FR 23925, May 4, 1999, as amended at 65 FR 6863, Feb. 10, 2000; 65 FR 59970, Oct. 6, 2000]

§ 86.1816–05 Emission standards for complete heavy-duty vehicles.

This section applies to 2005 and later model year complete heavy-duty vehicles (2003 model year for manufacturers choosing Otto-cycle HDE option 1 in § 86.005–1(c)(1), or 2004 model year for manufacturers choosing Otto-cycle HDE option 2 in § 86.005–1(c)(2)) fueled by gasoline, methanol, natural gas and liquefied petroleum gas fuels except as noted. This section does not apply to Medium-duty Passenger Vehicles, which are covered under § 86.1811. This section also applies to 2000 and later model year complete heavy duty vehicles participating in the early banking provisions of the averaging, trading and banking program as specified in § 86.1817–05(n). Multi-fueled vehicles shall comply with all requirements established for each consumed fuel. For methanol fueled vehicles, references in this section to hydrocarbons or total hydrocarbons shall mean total hydrocarbon equivalents and references to non-methane hydrocarbons shall mean non-methane hydrocarbon equivalents.

(a) *Exhaust emission standards*. (1) Exhaust emissions from 2005 and later model year complete heavy-duty vehicles at and above 8,500 pounds Gross Vehicle Weight Rating but equal to or less than 10,000 Gross Vehicle Weight Rating pounds shall not exceed the following standards at full useful life:

(i) [Reserved]

(ii) *Non-methane organic gas*. 0.280 grams per mile; this requirement may be satisfied by measurement of non-

methane hydrocarbons or total hydrocarbons, at the manufacturer's option.

(iii) *Carbon monoxide*. 7.3 grams per mile.

(iv) *Oxides of nitrogen*. 0.9 grams per mile.

(v) [Reserved]

(2) Exhaust emissions from 2005 and later model year complete heavy-duty vehicles above 10,000 pounds Gross Vehicle Weight Rating but less than 14,000 pounds Gross Vehicle Weight Rating shall not exceed the following standards at full useful life:

(i) [Reserved]

(ii) *Non-methane organic gas*. 0.330 grams per mile; this requirement may be satisfied by measurement of non-methane hydrocarbons or total hydrocarbons, at the manufacturer's option.

(iii) *Carbon monoxide*. 8.1 grams per mile.

(iv) *Oxides of nitrogen*. 1.0 grams per mile.

(v) [Reserved]

(b)–(c) [Reserved]

(d) *Evaporative emissions*. Evaporative hydrocarbon emissions from gasoline-fueled, natural gas-fueled, liquefied petroleum gas-fueled, and methanol-fueled complete heavy-duty vehicles shall not exceed the following standards. The standards apply equally to certification and in-use vehicles. The spitback standard also applies to newly assembled vehicles.

(1) Gasoline, natural gas, liquefied petroleum gas, and methanol fuel. For the full three-diurnal test sequence, diurnal plus hot soak measurements: 3.0 grams per test.

(2) *Gasoline and methanol fuel only*. For the supplemental two-diurnal test sequence, diurnal plus hot soak measurements: 3.5 grams per test.

(3) *Gasoline and methanol fuel only*. Running loss test: 0.05 grams per mile.

(4) *Gasoline and methanol fuel only*. Fuel dispensing spitback test: 1.0 grams per test.

(e) *Refueling emissions*—(1) *Standards*. Refueling emissions from Otto-cycle complete heavy-duty vehicles equal to or less than 10,000 pounds Gross Vehicle Weight Rating shall be phased in, in accordance with the schedule in Table S01–5 in § 86.1810–01 not to exceed the following emission standards:

(i) For gasoline-fueled and methanol-fueled vehicles: 0.20 grams hydrocarbon per gallon (0.053 gram per liter) of fuel dispensed.

(ii) For liquefied petroleum gas-fueled vehicles: 0.15 grams hydrocarbon per gallon (0.04 gram per liter) of fuel dispensed.

(2) *Phase-in*. Complete heavy-duty vehicles subject to refueling standards must comply with the phase-in requirements found in Table S01–5 in § 86.1810–01, and must be grouped with HLDTs and MDPVs to determine phase-in compliance.

(3) *Alternate timing*. (i) For manufacturers choosing Otto-cycle HDE option 3 under § 86.005–1(c)(3), the refueling emissions standards are optional for 2004 model year complete heavy-duty vehicles.

(ii) For manufacturers choosing Otto-cycle HDE option 3 under § 86.005–1(c)(3), the manufacturer may exempt 2005 model year HDE test groups whose model year begins before July 31, 2004. Only 2005 model year HDE test groups whose model year begins on or after July 31, 2004 shall be considered (together with all 2005 model year HLDTs and MDPVs) for purposes of calculating the sales percentage for phase-in as outlined in § 86.1810–01(k).

(iii) For complete heavy-duty vehicles which have total fuel tank capacity of greater than 35 gallons, or which do not share a common fuel system with a light-duty truck or medium-duty passenger vehicle configuration, the refueling emissions standards are optional for the 2004 and 2005 model years.

(4) *Exceptions*. The provisions of this § 86.1816–05(e) do not apply to incomplete heavy-duty vehicles optionally certified to complete heavy duty vehicle standards under the provisions of § 86.1801–01(c)(2).

(f) [Reserved]

(g) *Idle exhaust emission standards, complete heavy-duty vehicles*. Exhaust emissions of carbon monoxide from 2005 and later model year gasoline, methanol, natural gas-and liquefied petroleum gas-fueled complete heavy-duty vehicles shall not exceed 0.50 percent of exhaust gas flow at curb idle for a useful life of 11 years or 120,000 miles, whichever occurs first. This does not

apply for vehicles certified to the requirements of § 86.1806–05

(h) *Alternate test groups*. Manufacturers may request to group complete heavy-duty vehicles into the same test group as vehicles subject to more stringent standards, so long as those complete heavy-duty vehicles meet the most stringent standards applicable to any vehicle within that test group, as provided at § 86.1827– (a)(5) and (d)(4).

[65 FR 59970, Oct. 6, 2000, as amended at 66 FR 5190, Jan. 18, 2001]

§ 86.1816–08 Emission standards for complete heavy-duty vehicles.

Section 86.1816–08 includes text that specifies requirements that differ from those specified in § 86.1816–05. Where a paragraph in § 86.1816–05 is identical and applicable to § 86.1816–08, this may be indicated by specifying the corresponding paragraph and the statement ''[Reserved]. For guidance see § 86.1816–05.''. This section applies to 2008 and later model year complete heavy-duty vehicles (excluding MDPVs) fueled by gasoline, methanol, natural gas and liquefied petroleum gas fuels except as noted. Multi-fueled vehicles shall comply with all requirements established for each consumed fuel. For methanol fueled vehicles, references in this section to hydrocarbons or total hydrocarbons shall mean total hydrocarbon equivalents and references to non-methane hydrocarbons shall mean non-methane hydrocarbon equivalents.

(a) *Exhaust emission standards*. (1) Exhaust emissions from 2008 and later model year complete heavy-duty vehicles at and above 8,500 pounds Gross Vehicle Weight Rating but equal to or less than 10,000 Gross Vehicle Weight Rating pounds shall not exceed the following standards at full useful life:

(i) [Reserved]

(ii) *Non-methane hydrocarbons*. (A) 0.195 grams per mile; this requirement may be satisfied by measurement of non-methane organic gas or total hydrocarbons, at the manufacturer's option. For alcohol-fueled vehicles, this standard is 0.195 grams per mile NMHCE.

(B) A manufacturer may elect to include any or all of its test groups in the NMHC emissions ABT programs for heavy-duty vehicles, within the restrictions described in § 86.1817–05. or § 86.1817–08. If the manufacturer elects to include test groups in any of these programs, the NMHC FEL may not exceed 0.28 grams per mile. This ceiling value applies whether credits for the family are derived from averaging, banking, or trading.

(iii) *Carbon monoxide*. 7.3 grams per mile.

(iv) *Oxides of nitrogen*. (A)0.2 grams per mile.

(B) A manufacturer may elect to include any or all of its test groups in the NO_X emissions ABT programs for heavy-duty vehicles, within the restrictions described in § 86.1817–05 or § 86.1817–08. If the manufacturer elects to include test groups in any of these programs, the NO_X FEL may not exceed 0.9 grams per mile. This ceiling value applies whether credits for the family are derived from averaging, banking, or trading.

(v) *Particulate*. 0.02 grams per mile.

(vi) *Formaldehyde*. 0.032 grams per mile.

(2) Exhaust emissions from 2008 and later model year complete heavy-duty vehicles above 10,000 pounds Gross Vehicle Weight Rating but less than 14,000 pounds Gross Vehicle Weight Rating shall not exceed the following standards at full useful life:

(i) [Reserved]

(ii) *Non-methane hydrocarbons*. (A) 0.230 grams per mile; this requirement may be satisfied by measurement of non-methane organic gas or total hydrocarbons, at the manufacturer's option. For alcohol-fueled vehicles, this standard is 0.230 grams per mile NMHCE.

(B) A manufacturer may elect to include any or all of its test groups in the NMHC emissions ABT programs for heavy-duty vehicles, within the restrictions described in § 86.1817–05. or § 86.1817–08. If the manufacturer elects to include test groups in any of these programs, the NMHC FEL may not exceed 0.33 grams per mile. This ceiling value applies whether credits for the family are derived from averaging, banking, or trading.

(iii) *Carbon monoxide*. 8.1 grams per mile.

(iv) *Oxides of nitrogen.* (A)0.4 grams per mile.

(B) A manufacturer may elect to include any or all of its test groups in the NO_X emissions ABT programs for heavy-duty vehicles, within the restrictions described in § 86.1817–05. or § 86.1817–08. If the manufacturer elects to include test groups in any of these programs, the NO_X FEL may not exceed 1.0 grams per mile. This ceiling value applies whether credits for the family are derived from averaging, banking, or trading.

(v) *Particulate.* 0.02 grams per mile.

(vi) *Formaldehyde.* 0.040 grams per mile.

(b)–(c) [Reserved]

(d) *Evaporative emissions.* Evaporative hydrocarbon emissions from gasoline-fueled, natural gas-fueled, liquefied petroleum gas-fueled, and methanol-fueled complete heavy-duty vehicles shall not exceed the following standards. The standards apply equally to certification and in-use vehicles. The spitback standard also applies to newly assembled vehicles.

(1) For the full three-diurnal test sequence, diurnal plus hot soak measurements: 1.4 grams per test.

(2) Gasoline and methanol fuel only. For the supplemental two-diurnal test sequence, diurnal plus hot soak measurements: 1.75 grams per test.

(3) Gasoline and methanol fuel only. Running loss test: 0.05 grams per mile.

(4) Gasoline and methanol fuel only. Fuel dispensing spitback test: 1.0 grams per test.

(e) through (h) [Reserved]. For guidance see § 86.1816–05.

(i) *Phase-in options.* (1)(i) For model year 2008, manufacturers may certify some of their test groups to the standards applicable to model year 2008 vehicles under § 86.1816–05, in lieu of the exhaust standards specified in this section. These vehicles must comply with all other requirements applicable to model year 2007 vehicles. The combined number of vehicles in the test groups certified to the 2008 standards may not exceed 50 percent of the manufacturer's U.S. heavy-duty vehicle sales of complete heavy-duty Otto-cycle motor vehicles for model year 2008, except as explicitly allowed by paragraph (i)(2) of this section.

(ii) For model year 2008, manufacturers may certify some of their test groups to the evaporative standards applicable to model year 2007 engines under § 86.1816–05, in lieu of the evaporative standards specified in this section. These vehicles must comply with all other requirements applicable to model year 2008 vehicles, except as allowed by paragraph (i)(1)(i) of this section. The combined number of vehicles in the test groups certified to the 2007 standards may not exceed 50 percent of the manufacturer's U.S. heavy-duty vehicle sales of complete heavy-duty Otto-cycle motor vehicles for model year 2008.

(2)(i) Manufacturers certifying vehicles to all of the applicable standards listed in paragraph (a) of this section prior to model year 2008 (without using credits) may reduce the number of vehicles that are required to meet the standards listed in paragraph (a) of this section in model year 2008 and/or 2009, taking into account the phase-in option provided in paragraph (i)(1) of this section. For every vehicle that is certified early, the manufacturer may reduce the number of vehicles that are required by paragraph (i)(1) of this section to meet the standards listed in paragraph (a) of this section by one vehicle. For example, if a manufacturer produces 100 heavy-duty Otto-cycle vehicles in 2007 that meet all of the applicable the standards listed in paragraph (a) of this section, and it produced 10,000 heavy-duty Otto-cycle vehicles in 2009, then only 9,900 of the vehicles would need to comply with the standards listed in paragraph (a) of this section.

(ii) Manufacturers certifying vehicles to all of the applicable evaporative standards listed in paragraph (d) of this section prior to model year 2008 may reduce the number of vehicles that are required to meet the standards listed in paragraph (d) of this section in model year 2008 and/or 2009, taking into account the phase-in option provided in paragraph (i)(1) of this section. For every vehicle that is certified early, the manufacturer may reduce the number of vehicles that are required by paragraph (i)(1) of this section to meet the evaporative standards listed in

paragraph (d) of this section by one vehicle.

(3) Manufacturers certifying vehicles to all of the applicable standards listed in paragraph (i)(3)(i) or (ii) of this section (without using credits) and the evaporative standards listed in paragraph (d) of this section prior to model year 2008 may reduce the number of vehicles that are required to meet the standards listed in paragraph (a) of this section in model year 2008 and/or 2009, taking into account the phase-in option provided in paragraph (i)(1)(i) of this section. For every such vehicle that is certified early with sufficiently low emissions, the manufacturer may reduce the number of vehicles that are required by paragraph (i)(1)(i) of this section to meet the standards listed in paragraph (a) of this section by two vehicles. The applicable standards are:

(i) For complete heavy-duty vehicles at and above 8,500 pounds Gross Vehicle Weight Rating but equal to or less than 10,000 Gross Vehicle Weight Rating: 0.100 g/mile NMHC, 0.10 g/mile NO_X, 3.2 g/mile CO, 0.008 g/mile formaldehyde, and 0.02 g/mile PM.

(ii) For complete heavy-duty vehicles at or above 10,000 pounds Gross Vehicle Weight Rating but equal to or less than 14,000 Gross Vehicle Weight Rating: 0.117 g/mile NMHC, 0.20 g/mile NO_X, 3.7 g/mile CO, 0.010 g/mile formaldehyde, and 0.02 g/mile PM.

(j) (1) For model years prior to 2012, for purposes of determining compliance after title or custody has transferred to the ultimate purchaser, for vehicles meeting the applicable emission standards of this section, the applicable compliance limits shall be determined by adding the applicable adjustment from paragraph (j)(2) of this section to the otherwise applicable standard or FEL.

(2) The in-use adjustments are:

(i) 0.1 g/mi for NO_X.

(ii) 0.100 g/mi NMHC.

(iii) 0.01 g/mi for PM.

[66 FR 5190, Jan. 18, 2001, as amended at 70 FR 40443, July 13, 2005]

§ 86.1817–05 Complete heavy-duty vehicle averaging, trading, and banking program.

(a) *General.* (1) Complete heavy-duty vehicles eligible for the NO_X averaging, trading and banking program are described in the applicable emission standards section of this subpart. All heavy-duty vehicles which include an engine labeled for use in clean-fuel vehicles as specified in 40 CFR part 88 are not eligible for this program. Participation in this averaging, trading, and banking program is voluntary.

(2)(i) Test groups with a family emission limit (FEL) as defined in § 86.1803–01 exceeding the applicable standard shall obtain emission credits as defined in § 86.1803–01 in a mass amount sufficient to address the shortfall. Credits may be obtained from averaging, trading, or banking, as defined in § 86.1803–01 within the averaging set restrictions described in paragraph (d) of this section.

(ii) Test groups with an FEL below the applicable standard will have emission credits available to average, trade, bank or a combination thereof. Credits may not be used for averaging or trading to offset emissions that exceed an FEL. Credits may not be used to remedy an in-use nonconformity determined by a Selective Enforcement Audit or by recall testing. However, credits may be used to allow subsequent production of vehicles for the test group in question if the manufacturer elects to recertify to a higher FEL.

(b) *Participation.* Participation in the NO_X averaging, trading, and banking program shall be done as follows:

(1) During certification, the manufacturer shall:

(i) Declare its intent to include specific test groups in the averaging, trading and banking program.

(ii) Declare an FEL for each test group participating in the program.

(A) The FEL must be to the same level of significant digits as the emission standard (one-hundredth of a gram per mile for NO_X emissions).

(B) In no case may the FEL exceed the upper limit prescribed in the section concerning the applicable complete heavy-duty vehicle chassis-based NO_X emission standard.

(iii) Calculate the projected NO_X emission credits (positive or negative) as defined in § 86.1803–01 based on quarterly production projections for each

participating test group, using the applicable equation in paragraph (c) of this section and the applicable factors for the specific test group.

(iv)(A) Determine and state the source of the needed credits according to quarterly projected production for test groups requiring credits for certification.

(B) State where the quarterly projected credits will be applied for test groups generating credits.

(C) Emission credits as defined in § 86.1803–01 may be obtained from or applied to only test groups within the same averaging set as defined in § 86.1803–01. Emission credits available for averaging, trading, or banking, may be applied exclusively to a given test group, or designated as reserved credits as defined in § 86.1803–01.

(2) Based on this information, each manufacturer's certification application must demonstrate:

(i) That at the end of model year production, each test group has a net emissions credit balance of zero or more using the methodology in paragraph (c) of this section with any credits obtained from averaging, trading or banking.

(ii) The source of the credits to be used to comply with the emission standard if the FEL exceeds the standard, or where credits will be applied if the FEL is less than the emission standard. In cases where credits are being obtained, each test group involved must state specifically the source (manufacturer/test group) of the credits being used. In cases where credits are being generated/supplied, each test group involved must state specifically the designated use (manufacturer/test group or reserved) of the credits involved. All such reports shall include all credits involved in averaging, trading or banking.

(3) During the model year, manufacturers must:

(i) Monitor projected versus actual production to be certain that compliance with the emission standards is achieved at the end of the model year.

(ii) Provide the end-of-year reports required under paragraph (i) of this section.

(iii) For manufacturers participating in emission credit trading, maintain the quarterly records required under paragraph (l) of this section.

(4) Projected credits based on information supplied in the certification application may be used to obtain a certificate of conformity. However, any such credits may be revoked based on review of end-of-model year reports, follow-up audits, and any other compliance measures deemed appropriate by the Administrator.

(5) Compliance under averaging, banking, and trading will be determined at the end of the model year. Test groups without an adequate amount of NO_X emission credits will violate the conditions of the certificate of conformity. The certificates of conformity may be voided *ab initio* for test groups exceeding the emission standard.

(6) If EPA or the manufacturer determines that a reporting error occurred on an end-of-year report previously submitted to EPA under this section, the manufacturer's credits and credit calculations will be recalculated. Erroneous positive credits will be void. Erroneous negative balances may be adjusted by EPA for retroactive use.

(i) If EPA review of a manufacturer's end-of-year report indicates a credit shortfall, the manufacturer will be permitted to purchase the necessary credits to bring the credit balance for that test group to zero, at the ratio of 1.2 credits purchased for every credit needed to bring the balance to zero. If sufficient credits are not available to bring the credit balance for the test group in question to zero, EPA may void the certificate for that test group *ab initio*.

(ii) If within 180 days of receipt of the manufacturer's end-of-year report, EPA review determines a reporting error in the manufacturer's favor (*i.e.* resulting in a positive credit balance) or if the manufacturer discovers such an error within 180 days of EPA receipt of the end-of-year report, the credits will be restored for use by the manufacturer.

(c) *Calculations.* For each participating test group, NO_X emission credits (positive or negative) are to be calculated according to one of the following equations and rounded, in accordance with ASTM E29–93a (incorporated by reference at § 86.1), to the

nearest one-tenth of a Megagram (MG). Consistent units are to be used throughout the equation.

(1) For determining credit need for all test groups and credit availability for test groups generating credits for averaging only:

$$\text{Emission credits}=(\text{Std-FEL}) \times (\text{UL}) \times (\text{Production}) \times (10^{-6})$$

(2) For determining credit availability for test groups generating credits for trading or banking:

$$\text{Emission credits}=(\text{Std-FEL}) \times (\text{UL}) \times (\text{Production}) \times (10^{-6}) \text{ (Discount)}$$

(3) For purposes of the equations in paragraphs (c)(1) and (c)(2) of this section:

Std = the current and applicable complete heavy-duty vehicle NO_X emission standard in grams per mile or grams per kilometer.

Std = 0.9 grams per mile for heavy-duty vehicles at and above 8,500 pounds Gross Vehicle Weight Rating but equal to or less than 10,000 Gross Vehicle Weight Rating pounds and 1.0 grams per mile for heavy-duty vehicles above 10,000 pounds Gross Vehicle Weight Rating but less than 14,000 pounds Gross Vehicle Weight Rating for cases where certification to chassis-based standards is optional for purposes of early credit banking.

FEL = the NO_X family emission limit for the test group in grams per mile or grams per kilometer.

UL = the useful life, or alternative life as described in paragraph (c) of § 86.1805–01, for the given test group in miles or kilometers.

Production = the number of vehicles produced for U.S. sales within the given test group during the model year. Quarterly production projections are used for initial certification. Actual production is used for end-of-year compliance determination.

Discount = a one-time discount applied to all credits to be banked or traded within the model year generated. Except as otherwise allowed in paragraph (m) of this section, the discount applied here is 0.9. Banked credits traded in a subsequent model year will not be subject to an additional discount. Banked credits used in a subsequent model year's averaging program will not have the discount restored.

(d) *Averaging sets*. The averaging and trading of NO_X emission credits will be allowed between all test groups of heavy-duty vehicles subject to chassis-based standards excluding those vehicles produced for sale in California. Averaging, banking, and trading are not applicable to vehicles sold in California.

(e) *Banking of NO_X* emission credits—(1) *Credit deposits*. (i) NO_X emission credits may be banked from test groups produced in 2000 and later model years. Early banking is described in paragraph (n) of this section.

(ii) Manufacturers may bank credits only after the end of the model year and after actual credits have been reported to EPA in the end-of-year report. During the model year and before submittal of the end-of-year report, credits originally designated in the certification process for banking will be considered reserved and may be redesignated for trading or averaging.

(2) *Credit withdrawals*. (i) NO_X credits do not expire, except as provided in paragraph (o)(2) of this section.

(ii) Manufacturers withdrawing banked emission credits shall indicate so during certification and in their credit reports, as described in paragraph (i) of this section.

(3) *Use of banked emission credits*. The use of banked credits shall be within the averaging set and geographic restrictions described in paragraph (d) of this section, and only for the following purposes:

(i) Banked credits may be used in averaging, or in trading, or in any combination thereof, during the certification period. Credits declared for banking from the previous model year but not reported to EPA may also be used. However, if EPA finds that the reported credits cannot be proven, they will be revoked and unavailable for use.

(ii) Banked credits may not be used for averaging and trading to offset emissions that exceed an FEL. Banked credits may not be used to remedy an in-use nonconformity determined by a Selective Enforcement Audit or by recall testing. However, banked credits may be used for subsequent production of the test group if the manufacturer elects to recertify to a higher FEL.

(f) *Negative credit balance*. In the event of a negative credit balance in a trading situation, both the buyer and the seller would be liable.

(g) *Fuel*. Certification fuel used for credit generation must be of a type

that is both available in use and expected to be used by the vehicle purchaser. Therefore, upon request by the Administrator, the vehicle manufacturer must provide information acceptable to the Administrator that the designated fuel is readily available commercially and would be used in customer service.

(h) *Credit apportionment.* At the manufacturers option, credits generated from complete heavy-duty vehicles under the provisions described in this section may be sold to or otherwise provided to another party for use in programs other than the averaging, trading and banking program described in this section.

(1) The manufacturer shall pre-identify two emission levels per test group for the purposes of credit apportionment. One emission level shall be the FEL and the other shall be the level of the standard that the test group is required to certify under § 86.1816–04. For each test group, the manufacturer may report vehicle sales in two categories, ''ABT-only credits'' and ''nonmanufacturer-owned credits''.

(i) For vehicle sales reported as ''ABT-only credits'', the credits generated must be used solely in the averaging, trading and banking program described in this section.

(ii) The vehicle manufacturer may declare a portion of vehicle sales ''nonmanufacturer-owned credits'' and this portion of the credits generated between the standard and the FEL, based on the calculation in paragraph (c)(1) of this section, would belong to the vehicle purchaser. The manufacturer may not generate any credits for the vehicle sales reported as ''nonmanufacturer-owned credits'' for this averaging, trading and banking program. Vehicles reported as ''nonmanufacturer-owned credits'' shall comply with the FEL and the requirements of this averaging, trading and banking program in all other respects.

(2) Only manufacturer-owned credits reported as ''ABT-only credits'' shall be used in the averaging, trading, and banking provisions described in this section.

(3) Credits shall not be double-counted. Credits used in this averaging, trading and banking program may not be provided to a vehicle purchaser for use in another program.

(4) Manufacturers shall determine and state the number of vehicles sold as ''ABT-only credits'' and ''nonmanufacturer-owned credits'' in the end-of-model year reports required under paragraph (i) of this section.

(i) *Application for certification and end-of-year reports.* Manufacturers participating in the emissions averaging, trading and banking program, shall submit for each participating test group the items listed in paragraphs (i)(1) through (3) of this section.

(1) *Application for certification.* (i) The application for certification will include a statement that the vehicles for which certification is requested will not, to the best of the manufacturer's belief, when included in the averaging, trading and banking program, cause the applicable NO_X emissions standard to be exceeded.

(ii) The application for certification will also include identification of the section of this subpart under which the test group is participating in the averaging, trading and banking program (*e.g.*, § 86.1817–05), the type (NO_X), and the projected number of credits generated/needed for this test group, the applicable averaging set, the projected U.S. production volumes (excluding vehicles produced for sale in California), by quarter, and the values required to calculate credits as given in the applicable averaging, trading and banking section. Manufacturers shall also submit how and where credit surpluses are to be dispersed and how and through what means credit deficits are to be met, as explained in the applicable averaging, trading and banking section. The application must project that each test group will be in compliance with the applicable emission standards based on the vehicle mass emissions and credits from averaging, trading and banking.

(2) [Reserved]

(3) *End-of-year report.* The manufacturer shall submit end-of-year reports for each test group participating in the averaging, trading and banking program, as described in paragraphs (i)(3)(i) through (iv) of this section.

(i) These reports shall be submitted within 90 days of the end of the model

year to: Director, Certification and Compliance Division, U.S. Environmental Protection Agency, Mail Code 6405J, 1200 Pennsylvania Ave., NW., 20460.

(ii) These reports shall indicate the test group, the averaging set, the actual U.S. production volume (excluding vehicles produced for sale in California), the values required to calculate credits as given in the applicable averaging, trading and banking section, and the resulting type and number of credits generated/required. Manufacturers shall also submit how and where credit surpluses were dispersed (or are to be banked) and how and through what means credit deficits were met. Copies of contracts related to credit trading must also be included or supplied by the broker if applicable. The report shall also include a calculation of credit balances to show that net mass emissions balances are within those allowed by the emission standards (equal to or greater than a zero credit balance). Any credit discount factor described in the applicable averaging, trading and banking section must be included as required.

(iii) The production counts for end-of-year reports shall be based on the location of the first point of retail sale (*e.g.*, customer, dealer, secondary manufacturer) by the manufacturer.

(iv) Errors discovered by EPA or the manufacturer in the end-of-year report, including changes in the production counts, may be corrected up to 180 days subsequent to submission of the end-of-year report. Errors discovered by EPA after 180 days shall be corrected if credits are reduced. Errors in the manufacturer's favor will not be corrected if discovered after the 180 day correction period allowed.

(j) *Failure to submit quarterly or end-of-year reports.* Failure by a manufacturer participating in the averaging, trading and banking program to submit any quarterly or end-of-year report (as applicable) in the specified time for all vehicles that are part of an averaging set is a violation of section 203(a)(1) of the Clean Air Act (42 U.S.C. 7522(a)(1)) for such vehicles.

(k) *Failure to submit end-of-year reports for banked credits.* Failure by a manufacturer generating credits for deposit only in the complete heavy-duty vehicle banking program to submit their end-of-year reports in the applicable specified time period (*i.e.*, 90 days after the end of the model year) shall result in the credits not being available for use until such reports are received and reviewed by EPA. Use of projected credits pending EPA review will not be permitted in these circumstances.

(l) *Quarterly records.* Any manufacturer producing a test group participating in trading using reserved credits, shall maintain the following records on a quarterly basis for each test group in the trading subclass:

(1) The test group;

(2) The averaging set;

(3) The actual quarterly and cumulative U.S. production volumes excluding vehicles produced for sale in California;

(4) The values required to calculate credits as given in paragraph (c) of this section;

(5) The resulting type and number of credits generated/required;

(6) How and where credit surpluses are dispersed; and

(7) How and through what means credit deficits are met.

(m) *Additional flexibility for complete heavy-duty vehicles.* If a complete heavy-duty vehicle has a NO_X FEL of 0.6 grams per mile or lower, a discount of 1.0 may be used in the trading and banking credits calculation for NO_X described in paragraph (c)(2) of this section.

(n) *Early banking for complete heavy-duty vehicles.* Provisions set forth in paragraphs (a) through (m) of this section apply except as specifically stated otherwise in this paragraph (n).

(1) *Early banking eligibility.* To be eligible for the early banking program described in this paragraph, the following must apply:

(i) Credits are generated from complete heavy-duty vehicles.

(ii) During certification, the manufacturer shall declare its intent to include specific test groups in the early banking program described in this paragraph (n).

(2) *Credit generation and use.* (i) Early credits may be generated by test groups starting in model year 2000.

(ii) Credits may only be used for complete heavy-duty vehicles subject to chassis-based standards, except as provided by paragraph (o) in this section, and all credits shall be subject to discounting and all other provisions contained in paragraphs (a) through (m) of this section.

(o) *Credit transfers.* A manufacturer that elects to comply with Option 1 or 2 contained in § 86.005–10(f) may transfer credits between its complete vehicle averaging set and its heavy-duty Otto-cycle engine averaging set as follows:

(1) Credits earned in model years 2004 (2003 for Option 1) through 2007 are eligible to be transferred.

(2) Transferred credits may not be banked for use in model years 2008 and later. Credits that are transferred but not used prior to model year 2008 must be forfeited.

(3) Prior to transferring credits, a manufacturer must develop a methodology to transfer the credits including a conversion factor that may be used to convert between chassis-based credits (derived on a grams per mile basis) and equivalent engine-based credits (derived on a grams per brake horsepower-hour basis). The methodology must be approved by EPA prior to the start of the model year in which the credits are to be transferred. The conversion factor must provide reasonable certainty that the credits are equivalent for the specific vehicle test group(s) and engine family(s) involved in the generation and use of the credits.

[65 FR 59971, Oct. 6, 2000, as amended at 71 FR 2830, Jan. 17, 2006]

§ 86.1817–08 Complete heavy-duty vehicle averaging, trading, and banking program.

Section 86.1817–08 includes text that specifies requirements that differ from § 86.1817–05. Where a paragraph in § 86.1817–05 is identical and applicable to § 86.1817–08, this may be indicated by specifying the corresponding paragraph and the statement ''[Reserved]. For guidance see § 86.1817–05.''

(a) through (o) [Reserved]. For guidance see § 86.1817–05.

(p) The following provisions apply for model year 2008 and later engines. These provisions apply instead of the provisions of paragraphs § 86.1817–05 (a) through (o) to the extent that they are in conflict.

(1) Manufacturers of Otto-cycle vehicles may participate in an NMHC averaging, banking and trading program to show compliance with the standards specified in § 86.1806–08. The generation and use of NMHC credits are subject to the same provisions in paragraphs § 86.1817–05 (a) through (o) that apply for NO_X credits, except as otherwise specified in this section.

(2) NO_X or NMHC (or NO_X plus NMHC) credits may be exchanged between heavy-duty Otto-cycle test groups certified to the engine standards of subpart A of this part and heavy-duty Otto-cycle test groups certified to the chassis standards of this subpart, subject to an 0.8 discount factor (e.g., 100 grams of NO_X credits generated from vehicles would be equivalent to 80 grams of NO_X credits if they are used in the engine program of subpart A of this part, and vice versa). Credits that were previously discounted when they were banked according to § 86.1817–05(c), are subject to an additional discount factor of 0.888 instead of the 0.8 discount factor otherwise required by this paragraph (p)(2). This results in a total discount of 0.8 ($0.9 \times 0.888 = 0.8$).

(3) Credits are to be rounded to the nearest one-hundredth of a Megagram.

(4) To calculate credits relative to the NO_X standards listed in § 86.1816–08 (a)(1)(iv)(A) or (a)(2)(iv)(A) (0.2 or 0.4 grams per mile, respectively) express the standard and FEL to the nearest one-hundredth of a gram per mile prior to calculating the credits. Thus, either 0.20 or 0.40 should be used as the value for ''Std''.

(5) Credits generated for 2008 and later model year test groups are not discounted (except as specified in § 86.1817–05(c) and paragraph (p)(2) of this section), and do not expire.

(6) For the purpose of using or generating credits during a phase-in of new standards, a manufacturer may elect to split a test group into two subgroups: one which uses credits and one which generates credits. The manufacturer must indicate in the application for certification that the test group is to be split, and may assign the numbers

and configurations of vehicles within the respective subfamilies at any time prior to the submission of the end-of-year report described in § 86.1817–05 (i)(3). Manufacturers certifying a split test group may label all of the vehicles within that test group with the same FELs: either with a NO_X FEL and an NMHC FEL, or with a single NO_X+NMHC FEL. The FEL(s) on the label will apply for all SEA or other compliance testing.

(7) Vehicles meeting all of the applicable standards of § 86.1816–08 prior to model year 2008 may generate NMHC credits for use by 2008 or later test groups. Credits are calculated according to § 86.1817–05(c), except that the applicable FEL cap listed in § 86.1816–08(a)(1)(ii)(B) or (2)(ii)(B) applies instead of ''Std'' (the applicable standard).

[66 FR 5192, Jan. 18, 2001]

§§ 86.1818–86.1819 [Reserved]

§ 86.1820–01 Durability group determination.

This section applies to the grouping of vehicles into durability groups. Manufacturers shall divide their product line into durability groups based on the following criteria:

(a) The vehicles covered by a certification application shall be divided into groups of vehicles which are expected to have similar emission deterioration and emission component durability characteristics throughout their useful life. Manufacturers shall use good engineering judgment in dividing their vehicles into durability groups. Such groups of vehicles are defined as durability groups.

(b) To be included in the same durability group, vehicles must be identical in all the respects listed in paragraphs (b) (1) through (7) of this section:

(1) Combustion cycle (e.g., two stroke, four stroke, Otto cycle, diesel cycle).

(2) Engine type (e.g., piston, rotary, turbine, air cooled versus water cooled).

(3) Fuel used (e.g., gasoline, diesel, methanol, ethanol, CNG, LPG, flexible fuels).

(4) Basic fuel metering system (e.g., throttle body injection, port injection (including central port injection), carburetor, CNG mixer unit).

(5) Catalyst construction (for example, beads or monolith).

(6) Precious metal composition of the catalyst by the type of principal active material(s) used (e.g., platinum based oxidation catalyst, palladium based oxidation catalyst, platinum and rhodium three-way catalyst, palladium and rhodium three way catalyst, platinum and palladium and rhodium three way catalyst).

(7) The manufacturer must choose one of the following two criteria:

(i) Grouping statistic:

(A) Vehicles are grouped based upon the value of the grouping statistic determined using the following equation:

$$GS = [(\text{Cat Vol})/(\text{Disp})] \times \text{Loading Rate}$$

Where:

GS = Grouping Statistic used to evaluate the range of precious metal loading rates and relative sizing of the catalysts compared to the engine displacement that are allowable within a durability group. The grouping statistic shall be rounded to a tenth of a gram/liter, in accordance with the Rounding-Off Method specified in ASTM E29–93a, Standard Practice for Using Significant Digits in Test Data to Determine Conformance with Specifications (incorporated by reference, see § 86.1).

Cat Vol = Total volume of the catalyst(s) in liters.

Disp = Displacement of the engine in liters.

Loading rate = The mass of total precious metal(s) in the catalyst (or the total mass of all precious metal(s) of all the catalysts if the vehicle is equipped with multiple catalysts) in grams divided by the total volume of the catalyst(s) in liters.

(B) Engine-emission control system combinations which have a grouping statistic which is either less than 25 percent of the largest grouping statistic value, or less than 0.2 g/liter (whichever allows the greater coverage of the durability group) shall be grouped into the same durability group.

(ii) The manufacturer may elect to use another procedure which results in at least as many durability groups as required using criteria in paragraph (b)(7)(i) of this section providing that only vehicles with similar emission deterioration or durability are combined into a single durability group.

(c) Where vehicles are of a type which cannot be divided into durability groups based on the criteria listed above (such as non-catalyst control system approaches), the Administrator will establish durability groups for those vehicles based upon the features most related to their exhaust emission deterioration characteristics.

(d) Manufacturers may further divide groups determined under paragraph (b) of this section provided the Administrator is notified of any such changes prior to or concurrently with the submission of the application for certification (preferably at an annual preview meeting scheduled before the manufacturer begins certification activities for the model year).

(e) Manufacturers may request the Administrator's approval to combine vehicles into a single durability group which would normally not be eligible to be in a single durability group. The petition should provide:

(1) Substantial evidence that all the vehicles in the larger grouping will have the same degree of emission deterioration;

(2) Evidence of equivalent component durability over the vehicle's useful life; and

(3) Evidence that the groups will result in sufficient In-Use Verification Program data, appropriate tracking in use, and clear liability for the Agency's recall program.

§ 86.1821–01 Evaporative/refueling family determination.

(a) The gasoline-, methanol-, liquefied petroleum gas-, and natural gas-fueled light-duty vehicles and light-duty trucks described in a certification application will be divided into groupings which are expected to have similar evaporative and/or refueling emission characteristics (as applicable) throughout their useful life. Each group of vehicles with similar evaporative and/or refueling emission characteristics shall be defined as a separate evaporative/refueling family. Manufacturers shall use good engineering judgment to determine evaporative/refueling families.

(b) For gasoline-fueled or methanol-fueled light-duty vehicles and light-duty trucks to be classed in the same evaporative/refueling family, vehicles must be similar with respect to the items listed in paragraphs (b) (1) through (9) of this section.

(1) Type of vapor storage device (e.g., canister, air cleaner, crankcase).

(2) Basic canister design.

(i) Working capacity—grams adsorption within a 10 g. range.

(ii) System configuration—number of canisters and method of connection (i.e., series, parallel).

(iii) Canister geometry, construction and materials.

(3) Fuel system.

(4) Type of refueling emission control system—non-integrated or integrated with the evaporative control system. Further, if the system is non-integrated, whether or not any other evaporative emissions, e.g. diurnal or hot soak emissions, are captured in the same storage device as the refueling emissions.

(5) Fillpipe seal mechanism—mechanical, liquid trap, other.

(6) Vapor control system or method of controlling vapor flow through the vapor line to the canister (for example, type of valve, vapor control strategy).

(7) Purge control system (for example, type of valve, purge control strategy).

(8) Vapor hose material.

(9) Fuel tank material.

(c) Where vehicles are of a type which cannot be divided into evaporative/refueling families based on the criteria listed above (such as non-canister control system approaches), the Administrator will establish families for those vehicles based upon the features most related to their evaporative and/or refueling emission characteristics.

(d) Manufacturers may further divide families determined under paragraph (b) of this section provided the Administrator is notified of any such changes prior to or concurrently with the submission of the application for certification (preferably at an annual preview meeting scheduled before the manufacturer begins certification activities for the model year).

(e) Manufacturers may petition the Administrator to combine vehicles into a single evaporative/refueling family which would normally not be eligible

to be in a single evaporative/refueling family. The petition should provide:

(1) Substantial evidence that all the vehicles in the larger grouping will have the same degree of evaporative emission deterioration;

(2) Evidence of equivalent component durability over the vehicle's useful life; and

(3) Evidence that the groups will result in sufficient In-Use Verification Program data, appropriate tracking in use, and clear liability for the Agency's recall program.

§ 86.1822–01 Durability data vehicle selection.

(a) Within each durability group, the vehicle configuration which is expected to generate the highest level of exhaust emission deterioration on candidate vehicles in use, considering all constituents, shall be selected as the durability data vehicle configuration. The manufacturer will use good engineering judgment in making this selection.

(b) The manufacturer may select, using good engineering judgment, an equivalent or worst-case configuration in lieu of testing the vehicle selected in paragraph (a) of this section. Carryover data satisfying the provisions of § 86.1839–01 may also be used in lieu of testing the configuration selected in paragraph (a) of this section.

§ 86.1823–01 Durability demonstration procedures for exhaust emissions.

This section applies to light-duty vehicles, light-duty trucks, complete heavy-duty vehicles, and heavy-duty vehicles certified under the provisions of § 86.1801–01(c). Eligible small volume manufacturers or small volume test groups may optionally meet the requirements of §§ 86.1838–01 and 86.1826–01 in lieu of the requirements of this section. For model years 2001, 2002, and 2003 all manufacturers may elect to meet the provisions of paragraph (c)(2) of this section in lieu of these requirements for light-duty vehicles or light-duty trucks.

(a) The manufacturer shall propose a durability program consisting of the elements discussed in paragraphs (a)(1) through (a)(3) of this section for advance approval by the Administrator. The durability process shall be designed to effectively predict the expected deterioration of candidate in-use vehicles over their full and intermediate useful life and shall be consistent with good engineering judgment. The Administrator will approve the program if he/she determines that it is reasonably expected to meet these design requirements.

(1) *Service accumulation method.* (i) Each durability program shall include a service accumulation method designed to effectively predict the deterioration of emissions in actual use over the full and intermediate useful life of candidate in-use vehicles.

(ii) Manufacturers may propose service accumulation methods based upon whole-vehicle full-mileage accumulation, whole vehicle accelerated mileage accumulation (e.g., where 40,000 miles on a severe mileage accumulation cycle is equivalent to 100,000 miles of normal in-use driving), bench aging of individual components or systems, or other approaches approved by the Administrator.

(A) For whole vehicle mileage accumulation programs, all emission control components and systems (including both hardware and software) must be installed and operating for the entire mileage accumulation period.

(B) Bench procedures shall simulate the aging of components or systems over the applicable useful life and shall simulate driving patterns and vehicle operational environments found in actual use. For this purpose, manufacturers may remove the emission-related components (and other components), in whole or in part, from the durability vehicle itself and deteriorate them independently. Vehicle testing for the purpose of determining deterioration factors may include the testing of durability vehicles that incorporate such bench-aged components.

(2) *Vehicle/component selection method.* The manufacturer shall propose a vehicle/component selection method for advance approval by the Administrator. The procedure for selecting durability data vehicles and components shall meet the requirements of § 86.1822–01.

(3) *Use of deterioration program to determine compliance with the standard.*

The manufacturer shall propose procedures for the determination of compliance with the standards for advance approval by the Administrator. The calculation of deterioration factors and/or the determination of vehicle compliance shall be according to the procedures approved in advance by the Administrator. The Administrator will allow two methods for using the results of the deterioration program to determine compliance with the standards. Either a deterioration factor (DF) is calculated and applied to the emission data vehicle (EDV) emission results or aged components are installed on the EDV prior to emission testing. Other methods may be approved by the Administrator if they result in an effective prediction of intermediate and full useful life emission levels on candidate in-use vehicles.

(i) *Use of deterioration factors.* (A) Deterioration factors are calculated using all FTP emission test data generated during the durability testing program except as noted:

(*1*) Multiple tests at a given mileage point are averaged together unless the same number of tests are conducted at each mileage point.

(*2*) Before and after maintenance test results are averaged together.

(*3*) Zero-mile test results are excluded from the calculation.

(*4*) When calculating intermediate and full useful life deterioration factors all data points should be included in the calculations, except that total hydrocarbon (THC) test points beyond the 50,000-mile (useful life) test point shall not be included in the calculations.

(*5*) A procedure may be employed to identify and remove from the DF calculation those test results determined to be statistical outliers providing that the outlier procedure is consistently applied to all vehicles and data points and is approved in advance by the Administrator.

(B) The deterioration factor shall be based on a linear regression, or an other regression technique approved in advance by the Administrator. The deterioration may be a multiplicative or additive factor. Separate factors will be calculated for each regulated emission constituent and for the full and intermediate useful life periods as applicable. Separate DF's are calculated for each durability group except as provided in paragraph (c) of this section.

(*1*) A multiplicative DF will be calculated by taking the ratio of the full or intermediate useful life mileage level, as appropriate (rounded to four decimal places), divided by the stabilized mileage (reference § 86.1831–01(c), e.g., 4000-mile) level (rounded to four decimal places) from the regression analysis; the result shall be rounded to three-decimal places of accuracy. The rounding required in this paragraph shall be conducted in accordance with the Rounding-Off Method specified in ASTM E29–93a, Standard Practice for Using Significant Digits in Test Data to Determine Conformance with Specifications (incorporated by reference, see § 86.1). Calculated DF values of less than one shall be changed to one for the purposes of this paragraph.

(*2*) An additive DF will be calculated to be the difference between the full or intermediate useful life mileage level (as appropriate) minus the stabilized mileage (reference § 86.1831–01(c), e.g. 4000-mile) level from the regression analysis. The full useful life regressed emission value, the stabilized mileage regressed emission value, and the DF result shall be rounded to the same precision and using the same procedures as the raw emission results according to the provisions of § 86.1837–01. Calculated DF values of less than zero shall be changed to zero for the purposes of this paragraph.

(C) The DF calculated by these procedures will be used for determining compliance with FTP exhaust emission standards, SFTP exhaust emission standards, and cold CO emission standards. At the manufacturer's option and using procedures approved by the Administrator, a separate DF may be calculated exclusively using cold CO test data to determine compliance with cold CO emission standards. Also at the manufacturer's option and using procedures approved by the Administrator, a separate DF may be calculated exclusively using US06 and/or air conditioning (SC03) test data to determine compliance with the SFTP emission standards.

(ii) *Installation of aged components on emission data vehicles.* For full and intermediate useful life compliance determination, the manufacturer may elect to install aged components on an EDV rather than applying a deterioration factor. Different sets of components may be aged for full and intermediate useful life periods. The list of components to be installed, the techniques used to select physical parts to be aged, and the aging techniques employed to age the components must be approved in advance by the Administrator.

(b) In addition to the provisions of paragraph (a) of this section, manufacturers shall submit the following information when applying for the Administrator's approval of a durability program:

(1) Analysis and/or data demonstrating the adequacy of the manufacturer's durability processes to effectively predict emission compliance for candidate in-use vehicles. All regulated emission constituents and all test procedures shall be considered in this analysis. This data and discussion shall cover the breadth of the manufacturer's product line that will be covered by this durability procedure.

(2) Discussion of the manufacturer's in-use verification procedures including testing performed, vehicle procurement procedures used, and vehicles rejection criteria used. Any questionnaires used or inspections performed should also be documented in the manufacturer's submission. The in-use verification program shall meet the requirements of §§ 86.1845–01, 86.1846–01 and 86.1847–01.

(c) *Carryover and carryacross.* (1) Manufacturers may carry over or carry across mileage accumulation data, aged hardware, or deterioration factors according to the provisions of § 86.1839–01 using good engineering judgment.

(2) For the 2001, 2002, and 2003 model years, for light-duty vehicles and light-duty trucks the manufacturer may carry over exhaust emission DF's previously generated under the Standard AMA Durability Program described in § 86.094–13(c), the Alternate Service Accumulation Durability Program described in § 86.094–13(e) or the Standard Self-Approval Durability Program for light-duty trucks described in § 86.094–13(f) in lieu of complying with the durability provisions of paragraph (a)(1) of this section.

(i) This provision is limited to the use of existing data used for a 2000 model year or earlier certification. All new exhaust durability data must be generated according to the provisions of paragraph (a)(1) of this section.

(ii) The manufacturer shall exercise good engineering judgment when determining the eligibility to use carryover exhaust emission DF's and the selection of the vehicle used as the source of carryover.

(iii) Starting with the 2004 model year, manufacturers must meet the provisions of paragraphs (a) and (b) of this section.

(d) *Data reporting requirements.* Data reporting requirements are contained in § 86.1844–01.

(e) *Emission component durability.* The manufacturer shall use good engineering judgment to determine that all emission-related components are designed to operate properly for the full useful life of the vehicles in actual use.

(f) *In-use verification.* The durability program must meet the requirements of § 86.1845–01.

(g) The manufacturer shall apply the approved durability process to a durability group, including durability groups in future model years, if the durability process will effectively predict (or alternatively, overstate) the deterioration of emissions in actual use over the full and intermediate useful life of candidate in-use vehicles. The manufacturer shall use good engineering judgment in determining the applicability of the durability program to a durability group.

(1) The manufacturer may make modifications to an approved durability process using good engineering judgment for the purpose of ensuring that the modified process will effectively predict, (or alternatively, overstate) the deterioration of emissions in actual use over the full and intermediate useful life of candidate in-use vehicles.

(2) The manufacturer shall notify the Administrator of its determination to use an approved (or modified) durability program on particular test

groups and durability groups prior to emission data vehicle testing for the affected test groups (preferably at an annual preview meeting scheduled before the manufacturer begins certification activities for the model year).

(3) Prior to certification, the Administrator may reject the manufacturer's determination in paragraph (g) of this section if it is not made using good engineering judgment or it fails to properly consider data collected under the provisions of §§ 86.1845–01, 86.1846–01, and 86.1847–01 or other information if the Administrator determines that the durability process has not been shown to effectively predict emission levels or compliance with the standards in use on candidate vehicles for particular test groups which the manufacturers plan to cover with the durability process.

(h) The Administrator may withdraw approval to use a durability process or require modifications to a durability process based on the data collected under §§ 86.1845–01, 86.1846–01, and 86.1847–01 or other information if the Administrator determines that the durability processes have not been shown to accurately predict emission levels or compliance with the standards (or FEL, as applicable) in use on candidate vehicles (provided the inaccuracy could result in a lack of compliance with the standards for a test group covered by this durability process). Such withdrawals shall apply to future applications for certification and to the portion of the manufacturer's product line (or the entire product line) that the Administrator determines to be affected. Prior to such a withdrawal the Administrator shall give the manufacturer a preliminary notice at least 60 days prior to the final decision. During this period, the manufacturer may submit technical discussion, statistical analyses, additional data, or other information which is relevant to the decision. The Administrator will consider all information submitted by the deadline before reaching a final decision.

(i) Any manufacturer may request a hearing on the Administrator's withdrawal of approval in paragraph (h) of this section. The request shall be in writing and shall include a statement specifying the manufacturer's objections to the Administrator's determinations, and data in support of such objection. If, after review of the request and supporting data, the Administrator finds that the request raises a substantial factual issue, she/he shall provide the manufacturer a hearing in accordance with § 86.1853–01 with respect to such issue.

[64 FR 23925, May 4, 1999, as amended at 65 FR 59974, Oct. 6, 2000]

§ 86.1823–08 Durability demonstration procedures for exhaust emissions.

This section applies to all 2008 and later model year vehicles which meet the applicability provisions of § 86.1801. Optionally, a manufacturer may elect to use this section for earlier model year vehicles which meet the applicability provisions of § 86.1801. Eligible small volume manufacturers or small volume test groups may optionally meet the requirements of §§ 86.1838–01 and 86.1826–01 in lieu of the requirements of this section. A separate durability demonstration is required for each durability group.

(a) *Durability program objective.* The durability program must predict an expected in-use emission deterioration rate and emission level that effectively represents a significant majority of the distribution of emission levels and deterioration in actual use over the full and intermediate useful life of candidate in-use vehicles of each vehicle design which uses the durability program.

(b) *Required durability demonstration.* Manufacturers must conduct a durability demonstration for each durability group using a procedure specified in either paragraph (c), (d), or (e) of this section.

(c) *Standard whole-vehicle durability procedure.* This procedure consists of conducting mileage accumulation and periodic testing on the durability data vehicle, selected under the provisions of § 86.1822 described as follows:

(1) Mileage accumulation must be conducted using the standard road cycle (SRC). The SRC is described in Appendix V of this part.

(i) Mileage accumulation on the SRC may be conducted on a track or on a

chassis mileage accumulation dynamometer. Alternatively, the entire engine and emission control system may be aged on an engine dynamometer using methods that will replicate the aging that occurs on the road for that vehicle following the SRC.

(ii) The fuel used for mileage accumulation must comply with the mileage accumulation fuel provisions of § 86.113 for the applicable fuel type (e.g., gasoline or diesel fuel).

(iii) The DDV must be ballasted to a minimum of the loaded vehicle weight for light-duty vehicles and light light-duty trucks and a minimum of the ALVW for all other vehicles.

(iv) The mileage accumulation dynamometer must be setup as follows:

(A) The simulated test weight will be the equivalent test weight specified in § 86.129 using a weight basis of the loaded vehicle weight for light-duty vehicles and ALVW for all other vehicles.

(B) The road force simulation will be determined according to the provisions of § 86.129.

(C) The manufacturer will control the vehicle, engine, and/or dynamometer as appropriate to follow the SRC using good engineering judgement.

(2) Mileage accumulation must be conducted for at least 75% of the applicable full useful life mileage period specified in § 86.1805. If the mileage accumulation is less than 100% of the full useful life mileage, then the DF calculated according to the procedures of paragraph (f)(1)(ii) of this section must be based upon a line projected to the full-useful life mileage using the upper 80 percent statistical confidence limit calculated from the emission data.

(3) If a manufacturer elects to calculate a DF pursuant to paragraph (f)(1) of this section, then it must conduct at least one FTP emission test at each of five different mileage points selected using good engineering judgement. Additional testing may be conducted by the manufacturer using good engineering judgement. The required testing must include testing at 5,000 miles and at the highest mileage point run during mileage accumulation (e.g. the full useful life mileage). Different testing plans may be used providing that the manufacturer determines, using good engineering judgement, that the alternative plan would result in an equivalent or superior level of confidence in the accuracy of the DF calculation compared to the testing plan specified in this paragraph.

(d) *Standard bench-aging durability procedure.* This procedure is not applicable to diesel fueled vehicles or vehicles which do not use a catalyst as the principle after-treatment emission control device. This procedure requires installation of the catalyst-plus-oxygen-sensor system on a catalyst aging bench. Aging on the bench is conducted by following the standard bench cycle (SBC) for the period of time calculated from the bench aging time (BAT) equation. The BAT equation requires, as input, catalyst time-at-temperature data measured on the SRC.

(1) *Standard bench cycle (SBC).* Standard catalyst bench aging is conducted following the SBC

(i) The SBC must be run for the period of time calculated from the BAT equation.

(ii) The SBC is described in Appendix VII to Part 86.

(2) *Catalyst time-at-temperature data*

(i) Catalyst temperature must be measured during at least two full cycles of the SRC.

(ii) Catalyst temperature must be measured at the highest temperature location in the hottest catalyst on the DDV. Alternatively, the temperature may be measured at another location providing that it is adjusted to represent the temperature measured at the hottest location using good engineering judgement.

(iii) Catalyst temperature must be measured at a minimum rate of one hertz (one measurement per second).

(iv) The measured catalyst temperature results must be tabulated into a histogram with temperature bins of no larger than 25 °C.

(3) *Bench-aging time.* Bench aging time is calculated using the bench aging time (BAT) equation as follows:

t_e for a temperature bin = t_h $e^{((R/Tr) - (R/Tv))}$

Total t_e = Sum of t_e over all the temperature bins

Bench-Aging Time = A (Total t_e)

Where:

A = 1.1 This value adjusts the catalyst aging time to account for deterioration from sources other than thermal aging of the catalyst.

R = Catalyst thermal reactivity coefficient. For the SBC, R=17500 for Tier 2 vehicles and R=18500 for all other vehicles.

t_h = The time (in hours) measured within the prescribed temperature bin of the vehicle's catalyst temperature histogram adjusted to a full useful life basis e.g., if the histogram represented 400 miles, and full useful life was 100,000 miles; all histogram time entries would be multiplied by 250 (100000/400).

Total t_e = The equivalent time (in hours) to age the catalyst at the temperature of T_r on the catalyst aging bench using the catalyst aging cycle to produce the same amount of deterioration experienced by the catalyst due to thermal deactivation over the vehicle's full useful life.

t_e for a bin = The equivalent time (in hours) to age the catalyst at the temperature of T_r on the catalyst aging bench using the catalyst aging cycle to produce the same amount of deterioration experienced by the catalyst due to thermal deactivation at the temperature bin of T_v over the vehicle's full useful life.

T_r = The effective reference temperature (in °K) of the catalyst on the catalyst bench run on the bench aging cycle. The effective temperature is the constant temperature that would result in the same amount of aging as the various temperatures experienced during the bench aging cycle.

T_v = The mid-point temperature (in °K) of the temperature bin of the vehicle on-road catalyst temperature histogram.

(4) *Effective reference temperature on the SBC*. The effective reference temperature of the standard bench cycle (SBC) is determined for the actual catalyst system design and actual aging bench which will be used using the following procedures:

(i) Measure time-at-temperature data in the catalyst system on the catalyst aging bench following the SBC.

(A) Catalyst temperature must be measured at the highest temperature location of the hottest catalyst in the system. Alternatively, the temperature may be measured at another location providing that it is adjusted to represent the temperature measured at the hottest location using good engineering judgement.

(B) Catalyst temperature must be measured at a minimum rate of one hertz (one measurement per second) during at least 20 minutes of bench aging.

(C) The measured catalyst temperature results must be tabulated into a histogram with temperature bins of no larger than 10 °C.

(ii) The BAT equation must be used to calculate the effective reference temperature by iterative changes to the reference temperature (T_r) until the calculated aging time equals the actual time represented in the catalyst temperature histogram. The resulting temperature is the effective reference temperature on the SBC for that catalyst system and aging bench.

(5) *Catalyst Aging Bench*. The manufacturer must design, using good engineering judgement, a catalyst aging bench that follows the SBC and delivers the appropriate exhaust flow, exhaust constituents, and exhaust temperature to the face of the catalyst.

(i) A manufacturer may use the criteria and equipment discussed in Appendix VIII to part 86 to develop its catalyst aging bench without prior Agency approval. The manufacturer may use another design that results in equivalent or superior results with advance Agency approval.

(ii) All bench aging equipment and procedures must record appropriate information (such as measured A/F ratios and time-at-temperature in the catalyst) to assure that sufficient aging has actually occurred.

(6) *Required Testing*. If a manufacturer is electing to calculate a DF (as discussed in paragraph (f)(1) of this section), then it must conduct at least two FTP emissions tests on the DDV before bench aging of emission control hardware and at least two FTP emission tests on the DDV after the bench-aged emission hardware is re-installed. Additional testing may be conducted by the manufacturer using good engineering judgement.

(e) *Additional durability procedures*—(1) Whole vehicle durability procedures. A manufacturer may use either a customized SRC or an alternative road cycle for the required durability demonstration, with prior EPA approval.

(i) *Customized SRC*. A customized SRC is the SRC run for a different number of miles and/or using a different mileage accumulation fuel with higher levels of certain compounds that may lead to catalyst poisoning, such as phosphorus, sulfur and lead, than specified in paragraph (c)(1)(ii) of this section.

(ii) *Alternative Road Cycle*. An alternative cycle is a whole vehicle mileage accumulation cycle that uses a different speed-versus-time trace than the SRC, conducted for either the full useful life mileage or for less than full useful life mileage. An alternative road cycle may also include the use of fuel with higher levels of certain compounds that may lead to catalyst poisoning, such as phosphorus, sulfur and lead, than specified in paragraph (c)(1)(ii) of this section.

(iii) *Approval Criteria*. The manufacturer must obtain approval from EPA prior to using a customized/alternative road cycle. EPA may approve a customized/alternative cycle when the manufacturer demonstrates that the cycle is expected to achieve the durability program objective of paragraph (a) of this section for the breadth of vehicles using the customized/alternative cycle. To obtain approval the manufacturer must submit all the following information and perform all the following analyses:

(A) The manufacturer must supply in-use FTP emission data on past model year vehicles which are applicable to the vehicle designs it intends to cover with the customized/alternative cycle.

(*1*) The amount of in-use emission data required to demonstrate the effectiveness of a customized/alternative cycle in meeting the durability objective is based on whether the customized/alternative cycle is more or less severe than the SRC. In most cases, EPA will accept a minimum of 20 candidate in-use vehicles tested as-received on the FTP cycle. If the customized/alternative cycle is significantly more severe than the SRC, EPA may accept less data. Conversely, if the customized/alternative cycle is significantly less severe than the SRC, EPA may require more data, up to a maximum of 30 vehicles.

(*2*) This data set must consist of randomly procured vehicles from actual customer use. The vehicles selected for procurement must cover the breadth of the vehicles that the manufacturer intends to certify using the customized/alternative cycle. Vehicles should be procured and FTP tested in as-received condition under the guidelines of the high mileage IUVP program (ref: 40 CFR 86.1845–04).

(*3*) Manufacturers may use previously generated in-use data from the CAP 2000 IUVP or the RDP ''reality check'' in-use program as well as other sources of in-use emissions data for approval under this section.

(*4*) Manufacturers must remove unrepresentative data from the data set using good engineering judgement. The manufacturer must provide EPA with the data removed from the analysis and a justification for the removal of that data.

(*5*) Manufacturers may supply additional in-use data.

(B) The manufacturer must submit an analysis which includes a comparison of the relative stringency of the customized/alternative cycle to the SRC and a calculated equivalency factor for the cycle.

(*1*) The equivalency factor may be determined by an evaluation of the SRC and the customized/alternative cycle using catalyst time-at-temperature data from both cycles and the BAT equation to calculate the required bench aging time of each cycle. The equivalency factor is the ratio of the aging time on the SRC divided by the aging time on the alternative cycle.

(*2*) If emissions data is available from the SRC, as well as time-at-temperature data, then that emissions information may be included in the evaluation of the relative stringency of the two cycles and the development of the equivalency factor.

(*3*) A separate equivalency factor may be determined for each test group,

or test groups may be combined together (using good engineering judgement) to calculate a single equivalency factor.

(C) The manufacturer must submit an analysis which evaluates whether the durability objective will be achieved for the vehicle designs which will be certified using the customized/alternative cycle. The analysis must address of the following elements:

(*1*) How the durability objective has been achieved using the data submitted in paragraph (e)(1)(iii)(A) of this section.

(*2*) How the durability objective will be achieved for the vehicle designs which will be covered by the customized/alternative cycle. This analysis should consider the emissions deterioration impact of the design differences between the vehicles included in the data set required in (e)(1)(iii)(A) of this section and the vehicle designs that the manufacturer intends to certify using the customized/alternative cycle.

(2) *Bench-aging durability procedures.* A manufacturer may use a customized or alternative bench aging durability procedure for a required durability demonstration, if approved as described in paragraphs (e)(2)(i) through (vii) of this section. A customized/alternative bench aging procedure must use vehicle performance data (such as catalyst temperature) measured on an approved road cycle as part of the algorithm to calculate bench aging time. The manufacturer must obtain approval from the Agency prior to using a customized bench durability procedure.

(i) The lower control temperature on the SBC may be modified without prior EPA approval provided that the high control temperature is set 90 °C above the lower control temperature and an approved BAT equation is used to calculate bench aging time.

(ii) The R-factor used in EPA's BAT equation may be determined experimentally using EPA's standard procedures (specified in Appendix IX of this part) without prior EPA approval. Other experimental techniques to calculate the R-factor require advance EPA approval. To obtain approval, the manufacturer must demonstrate that the calculated bench aging time results in the same (or larger) amount of emission deterioration as the associated road cycle.

(iii) The A-factor used in EPA's BAT equation may be modified, using good engineering judgement without prior EPA approval, to ensure that the modified durability process will achieve the durability objective of paragraph (a) of this section.

(iv) Bench aging may be conducted using fuel with additional compounds that may lead to catalyst poisoning, such as phosphorus, sulfur or lead, without prior EPA approval. A manufacturer using fuel with these additional compounds may either calculate a new R-factor or A-factor to assure that the durability objective of paragraph (a) of this section is properly achieved regardless of the use of worst-case fuel, in which case the approval criteria for those changes would apply.

(v) An approved customized/alternative road cycle may be used to develop catalyst temperature histograms for use in the BAT equation without additional EPA approval beyond the original approval necessary to use that cycle for mileage accumulation.

(vi) A different bench cycle than the SBC may be used during bench aging with prior EPA approval. To obtain approval the manufacturer must demonstrate that bench aging for the appropriate time on the new bench cycle provides the same or larger amount of emission deterioration as the associated road cycle.

(vii) A different method to calculate bench aging time may be used with prior EPA approval. To obtain approval the manufacturer must demonstrate that bench aging for the time calculated by the alternative method results in the same or larger amount of emission deterioration as the associated road cycle.

(f) *Use of deterioration program to determine compliance with the standard.* A manufacturer may select from two methods for using the results of the deterioration program to determine compliance with the applicable emission standards. Either a deterioration factor (DF) is calculated and applied to

the emission data vehicle (EDV) emission results or aged components are installed on the EDV prior to emission testing.

(1) *Deterioration factors.*

(i) Deterioration factors are calculated using all FTP emission test data generated during the durability testing program except as noted:

(A) Multiple tests at a given mileage point are averaged together unless the same number of tests are conducted at each mileage point.

(B) Before and after maintenance test results are averaged together.

(C) Zero-mile test results are excluded from the calculation.

(D) Total hydrocarbon (THC) test points beyond the 50,000-mile (useful life) test point are excluded from the intermediate useful life deterioration factor calculation.

(E) A procedure may be employed to identify and remove from the DF calculation those test results determined to be statistical outliers providing that the outlier procedure is consistently applied to all vehicles and data points and is approved in advance by the Administrator.

(ii) The deterioration factor must be based on a linear regression, or another regression technique approved in advance by the Administrator. The deterioration must be a multiplicative or additive factor. Separate factors will be calculated for each regulated emission constituent and for the full and intermediate useful life periods as applicable. Separate DF's are calculated for each durability group except as provided in § 86.1839.

(A) A multiplicative DF will be calculated by taking the ratio of the full or intermediate useful life mileage level, as appropriate (rounded to four decimal places), divided by the stabilized mileage (reference § 86.1831–01(c), e.g., 4000-mile) level (rounded to four decimal places) from the regression analysis. The result must be rounded to three-decimal places of accuracy. The rounding required in this paragraph must be conducted in accordance with § 86.1837. Calculated DF values of less than one must be changed to one for the purposes of this paragraph.

(B) An additive DF will be calculated to be the difference between the full or intermediate useful life mileage level (as appropriate) minus the stabilized mileage (reference § 86.1831–01(c), *e.g.* 4000-mile) level from the regression analysis. The full useful life regressed emission value, the stabilized mileage regressed emission value, and the DF result must be rounded to the same precision and using the same procedures as the raw emission results according to the provisions of § 86.1837–01. Calculated DF values of less than zero must be changed to zero for the purposes of this paragraph.

(iii) The DF calculated by these procedures will be used for determining full and intermediate useful life compliance with FTP exhaust emission standards, SFTP exhaust emission standards, and cold CO emission standards. At the manufacturer's option and using procedures approved by the Administrator, a separate DF may be calculated exclusively using cold CO test data to determine compliance with cold CO emission standards. Also at the manufacturer's option and using procedures approved by the Administrator, a separate DF may be calculated exclusively using US06 and/or air conditioning (SC03) test data to determine compliance with the SFTP emission standards.

(2) *Installation of aged components on emission data vehicles.* For full and intermediate useful life compliance determination, the manufacturer may elect to install aged components on an EDV prior to emission testing rather than applying a deterioration factor. Different sets of components may be aged for full and intermediate useful life periods. Components must be aged using an approved durability procedure that complies with paragraph (b) of this section. The list of components to be aged and subsequently installed on the EDV must selected using good engineering judgement.

(g) *Emission component durability.* [Reserved] For guidance see 40 CFR 86.1823–01(e).

(h) *Application of the durability procedure to future durability groups.* The manufacturer may apply a durability procedure approved under paragraphs

(c), (d) or (e) of this section to a durability group, including durability groups in future model years, if the durability process will achieve the objective of paragraph (a) of this section for that durability group. The manufacturer must use good engineering judgment in determining the applicability of an approved durability procedure to a durability group.

(1) Modifications to a durability procedure.

(i) Standard durability procedures. The manufacturer may modify a standard durability procedure (allowed in paragraphs (c) or (d) of this section) by increasing or decreasing the number of miles run on the SRC to represent full or intermediate useful life emissions deterioration or by changing the A-Factor in the BAT equation for a bench aging, using good engineering judgment, to ensure that the modified procedure will achieve the objective of paragraph (a) of this section for that durability group.

(ii) Customized/Alternative durability procedures. The manufacturer may modify an alternative/customized durability procedure approved under the provisions of paragraph (e) of this section, using good engineering judgment, for the purposes of ensuring that the modified procedure will achieve the objective of paragraph (a) of this section for that durability group.

(2) The manufacturer must notify the Administrator of its determination to use an approved (or modified) durability procedure on particular test groups and durability groups prior to, or concurrently with, its submission of the Application for Certification for the affected test groups (notification at an annual preview meeting scheduled before the manufacturer begins certification activities for the model year is preferred).

(3) Prior to certification, the Administrator may reject the manufacturer's determination in paragraph (h) of this section to apply an approved or modified durability procedure for a durability group or test group if:

(i) It is not made using good engineering judgment,

(ii) It fails to properly consider data collected under the provisions of §§ 86.1845–04, 86.1846–01, and 86.1847–01 or other information, or

(iii) The Administrator determines that the durability procedure has not been shown to achieve the objective of paragraph (a) of this section for particular test groups which the manufacturer plans to cover with the durability procedure.

(i) *Evaluation of the certification durability procedures based on in-use emissions data.*

(1) Manufacturers must use the information gathered from the IUVP, as well as other sources of in-use emissions data, to periodically review whether the durability procedure it employs achieves the objective specified in paragraph (a) of this section.

(2) Required analysis of a manufacturer's approved durability procedures.

(i) In addition to any periodic reviews under paragraph (i)(1) of this section, a manufacturer must conduct a review of whether the durability procedure it employs achieves the durability objective specified in paragraph (a) of this section when the criteria for additional testing specified in § 86.1846 (b) are activated.

(ii) These criteria are evaluated independently for all applicable FTP emission constituents.

(iii) This analysis must be performed for each test group certified by the manufacturer.

(iv) These procedures apply to the EPA standard durability procedures discussed in paragraphs (c) and (d) of this section as well as durability procedures approved under paragraph (e) of this section, including modifications under paragraph (h) of this section.

(v) The analysis must be submitted to EPA no later than 60 days after the submission of the IUVP data report specified in § 86.1847(f).

(3) EPA may require a manufacturer to perform an analysis as described in paragraph (i)(2) of this section if EPA is concerned that the manufacturer's durability procedure may not achieve the durability objective of paragraph (a) of this section.

(j) If, based on the analysis required in paragraph (i) of this section and/or any other information, EPA determines that the durability procedure

does not achieve the durability objective of paragraph (a) of this section, EPA may withdraw approval to use the durability procedure or condition approval on modifications to the durability procedure. Such withdrawal or conditional approval will apply to future applications for certification and to the portion of the manufacturer's product line (or the entire product line) that the Administrator determines to be affected. Prior to such a withdrawal the Administrator will give the manufacturer a preliminary notice at least 60 days prior to the final decision. During this period, the manufacturer may submit technical discussion, statistical analyses, additional data, or other information which is relevant to the decision. The Administrator will consider all information submitted by the deadline before reaching a final decision.

(k) If EPA withdraws approval, under the provisions of paragraph (j) of this section, for a durability procedure approved under the provisions of paragraphs (c) and/or (d) of this section, the following procedures apply:

(1) The manufacturer must select one of the following options for future applications for certification for the applicable portion of the manufacturers product-line affect by the Agency's decision:

(i) Increase future DFs calculated using the applicable durability process by the average percent-difference between certification levels and IUVP data; or

(ii) Increase the miles driven on the SRC or the aging time calculated by the BAT equation by the average percent-difference between certification levels and IUVP data, or

(iii) The manufacturer may obtain approval for a new customized durability process, as allowed in paragraph (e) of this section, that has been demonstrated to meet the durability objective.

(2) If EPA's decision to withdraw approval under the provisions of paragraph (j) of this section is based on fewer than 20 tests, the Administrator may require a smaller adjustment than specified in paragraph (k)(1)(i) or (ii) of this section.

(l) Any manufacturer may request a hearing on the Administrator's withdrawal of approval in paragraphs (j) or (k) of this section. The request must be in writing and must include a statement specifying the manufacturer's objections to the Administrator's determinations, and data in support of such objection. If, after review of the request and supporting data, the Administrator finds that the request raises a substantial factual issue, she/he must provide the manufacturer a hearing in accordance with § 86.1853–01 with respect to such issue.

[71 FR 2830, Jan. 17, 2006]

§ 86.1824–01 Durability demonstration procedures for evaporative emissions.

This section applies to gasoline-, methanol-, liquefied petroleum gas-, and natural gas-fueled LDV/Ts, MDPVs, complete heavy-duty vehicles, and heavy-duty vehicles certified under the provisions of § 86.1801–01(c). The manufacturer shall determine a durability process that will predict the expected evaporative emission deterioration of candidate in-use vehicles over their full useful life. The manufacturer shall use good engineering judgment in determining this process.

(a) *Service accumulation method.* (1) The manufacturer shall develop a service accumulation method designed to effectively predict the deterioration of candidate in-use vehicles' evaporative emissions in actual use over its full useful life. The manufacturer shall use good engineering judgement in developing this method.

(2) The manufacturers may develop a service accumulation methods based upon whole-vehicle full-mileage accumulation, whole vehicle accelerated mileage accumulation (e.g., where 40,000 miles on a severe mileage accumulation cycle is equivalent to 100,000 miles of normal in-use driving), bench aging of individual components or systems, or other approaches approved by the Administrator.

(i) For whole vehicle mileage accumulation programs, all emission control components and systems (including both hardware and software) must be installed and operating for the entire mileage accumulation period.

(ii) Bench procedures shall simulate the aging of components or systems

over the applicable useful life and shall simulate driving patterns and vehicle operational environments found in actual use. For this purpose, manufacturers may remove the emission-related components (and other components), in whole or in part, from the durability vehicle itself and deteriorate them independently. Vehicle testing for the purpose of determining deterioration factors may include the testing of durability vehicles that incorporate such bench-aged components.

(iii) For gasoline fueled vehicles certified to meet the evaporative emission standards set forth in § 86.1811–04(e)(1), any service accumulation method for evaporative emissions must employ gasoline fuel for the entire service accumulation period which contains ethanol in, at least, the highest concentration permissible in gasoline under federal law and that is commercially available in any state in the United States. Unless otherwise approved by the Administrator, the manufacturer must determine the appropriate ethanol concentration by selecting the highest legal concentration commercially available during the calendar year before the one in which the manufacturer begins its service accumulation. The manufacturer must also provide information acceptable to the Administrator to indicate that the service accumulation method is of sufficient design, duration and severity to stabilize the permeability of all non-metallic fuel and evaporative system components to the service accumulation fuel constituents.

(iv) For flexible-fueled, dual-fueled, multi-fueled, ethanol-fueled and methanol-fueled vehicles certified to meet the evaporative emission standards set forth in § 86.1811–04(e)(1), any service accumulation method must employ fuel for the entire service accumulation period which the vehicle is designed to use and which the Administrator determines will have the greatest impact upon the permeability of evaporative and fuel system components. The manufacturer must also provide information acceptable to the Administrator to indicate that the service accumulation method is of sufficient design, duration and severity to stabilize the permeability of all non-metallic fuel and evaporative system components to service accumulation fuel constituents.

(v) A manufacturer may use other methods, based upon good engineering judgment, to meet the requirements of paragraphs (a)(2) (iii) and (iv) of this section, as applicable. These methods must be approved in advance by the Administrator and meet the objectives of paragraphs (a)(2) (iii) and (iv) of this section, as applicable: to provide assurance that the permeability of all non-metallic fuel and evaporative system components will not lead to evaporative emission standard exceedance under sustained exposure to commercially available alcohol-containing fuels for the useful life of the vehicle.

(b) *Vehicle/component selection method.* The manufacturer shall determine a vehicle and component selection procedure which results in representative test vehicles and reflects good engineering judgment.

(c) The manufacturer shall calculate a deterioration factor which is applied to the evaporative emission results of the emission data vehicles. The deterioration factor shall be based on a linear regression, or an other regression technique approved in advance by the Administrator. The DF will be calculated to be the difference between the full life mileage evaporative level minus the stabilized mileage (e.g., 4000-mile) evaporative level from the regression analysis. The DF and the full and stabilized mileage emission levels shall be rounded to two decimal places of accuracy in accordance with the Rounding-Off Method specified in ASTM E29–93a, Standard Practice for Using Significant Digits in Test Data to Determine Conformance with Specifications (incorporated by reference, see § 86.1(b)(1). Calculated DF values of less than zero shall be changed to zero for the purposes of this paragraph.

(d) *Emission component durability.* The manufacturer shall use good engineering judgment to determine that all emission-related components are designed to operate properly for the full useful life of the vehicles in actual use.

(e) *In-use verification.* The durability program must meet the requirements of § 86.1845–01.

(f) Information obtained under §§ 86.1845–01, 86.1846–01, 86.1847–01 or from other sources shall be used by the manufacturer in developing new durability processes and/or updating existing durability processes using good engineering judgment.

[64 FR 23925, May 4, 1999, as amended at 65 FR 6863, Feb. 10, 2000; 65 FR 59974, Oct. 6, 2000]

§ 86.1824–07 Durability demonstration procedures for evaporative emissions.

§ 86.1824–07 includes text that specifies requirements that differ from those specified in § 86.1824–01. Where a paragraph in § 86.1824–01 is identical and applicable to § 86.1824–07, this may be indicated by specifying the corresponding paragraph and the statement ''[Reserved]. For guidance see § 86.1824–01.''. This section applies to gasoline-, methanol-, natural gas- and liquefied petroleum gas-fueled LDV/Ts, MDPVs, and HDVs.

(a) through (f) [Reserved]. For guidance see § 86.1824–01.

[66 FR 5192, Jan. 18, 2001]

§ 86.1824–08 Durability demonstration procedures for evaporative emissions.

This section applies to gasoline-, methanol-, liquefied petroleum gas-, and natural gas-fueled 2008 and later model year vehicles which meet the applicability provisions of § 86.1801. Optionally, a manufacturer may elect to use this section for earlier model year gasoline-, methanol-, liquefied petroleum gas-, and natural gas-fueled vehicles which meet the applicability provisions of § 86.1801. Eligible small volume manufacturers or small volume test groups may optionally meet the requirements of §§ 86.1838–01 and 86.1826–01 in lieu of the requirements of this section. A separate durability demonstration is required for each evaporative/refueling family.

(a) *Durability program objective.* The durability program must predict an expected in-use emission deterioration rate and emission level that effectively represents a significant majority of the distribution of emission levels and deterioration in actual use over the full useful life of candidate in-use vehicles of each vehicle design which uses the durability program.

(b) *Required durability demonstration.* Manufacturers must conduct a durability demonstration which satisfies the provisions of either paragraph (c), (d), or (e) of this section.

(c) *Whole vehicle evaporative durability demonstration.*

(1) Mileage accumulation must be conducted using the SRC or any road cycle approved under the provisions of § 86.1823(e)(1).

(2) Mileage accumulation must be conducted for either:

(i) The applicable full useful life mileage period specified in § 86.1805, or

(ii) At least 75 percent of the full useful life mileage. In which case, the manufacturer must calculate a df calculated according to the procedures of paragraph (f)(1)(ii) of this section, except that the DF must be based upon a line projected to the full-useful life mileage using the upper 80 percent statistical confidence limit calculated from the emission data.

(3) The manufacturer must conduct at least one evaporative emission test at each of the five different mileage points selected using good engineering judgement. The required testing must include testing at 5,000 miles and at the highest mileage point run during mileage accumulation (e.g. the full useful life mileage). Additional testing may be conducted by the manufacturer using good engineering judgement. The manufacturer may select to run either the 2-day and/or 3-day evaporative test at each test point using good engineering judgement.

(d) *Bench aging evaporative durability procedures.* Manufacturers may use bench procedures designed, using good engineering judgement, to evaluate the emission deterioration of evaporative control systems. Manufacturers may base the bench procedure on an evaluation the following potential causes of evaporative emission deterioration:

(1) Cycling of canister loading due to diurnal and refueling events,

(2) Use of various commercially available fuels, including the Tier 2 requirement to include alcohol fuel;

(3) Vibration of components;

(4) Deterioration of hoses, etc. due to environmental conditions; and

(5) Deterioration of fuel cap due to wear.

(e) *Combined whole-vehicle and bench-aging programs.* Manufacturers may combine the results of whole vehicle aging and bench aging procedures using good engineering judgement.

(f) *Fuel requirements.*

(1) For gasoline fueled vehicles certified to meet the evaporative emission standards set forth in § 86.1811–04(e)(1), any mileage accumulation method for evaporative emissions must employ gasoline fuel for the entire mileage accumulation period which contains ethanol in, at least, the highest concentration permissible in gasoline under federal law and that is commercially available in any state in the United States. Unless otherwise approved by the Administrator, the manufacturer must determine the appropriate ethanol concentration by selecting the highest legal concentration commercially available during the calendar year before the one in which the manufacturer begins its mileage accumulation. The manufacturer must also provide information acceptable to the Administrator to indicate that the mileage accumulation method is of sufficient design, duration and severity to stabilize the permeability of all non-metallic fuel and evaporative system components to the mileage accumulation fuel constituents.

(2) For flexible-fueled, dual-fueled, multi-fueled, ethanol-fueled and methanol-fueled vehicles certified to meet the evaporative emission standards set forth in § 86.1811–04(e)(1), any mileage accumulation method must employ fuel for the entire mileage accumulation period which the vehicle is designed to use and which the Administrator determines will have the greatest impact upon the permeability of evaporative and fuel system components. The manufacturer must also provide information acceptable to the Administrator to indicate that the mileage accumulation method is of sufficient design, duration and severity to stabilize the permeability of all non-metallic fuel and evaporative system components to mileage accumulation fuel constituents.

(3) A manufacturer may use other methods, based upon good engineering judgment, to meet the requirements of paragraphs (f)(1) and (2) of this section, as applicable. These methods must be approved in advance by the Administrator and meet the objectives of paragraphs (f)(1) and (2) of this section, as applicable: to provide assurance that the permeability of all non-metallic fuel and evaporative system components will not lead to evaporative emission standard exceedance under sustained exposure to commercially available alcohol-containing fuels for the useful life of the vehicle.

(g) *Calculation of a deterioration factor.* The manufacturer must calculate a deterioration factor which is applied to the evaporative emission results of the emission data vehicles. The deterioration factor must be based on a linear regression, or an other regression technique approved in advance by the Administrator. The DF will be calculated to be the difference between the full life mileage evaporative level minus the stabilized mileage (e.g., 4000 − mile) evaporative level from the regression analysis. The full useful life regressed emission value, the stabilized mileage regressed emission value, and the DF result must be rounded to the same precision and using the same procedures as the raw emission results according to the provisions of § 86.1837–01. Calculated DF values of less than zero must be changed to zero for the purposes of this paragraph.

(h) *Emission component durability.* [Reserved] For guidance see 40 CFR 86.1824–01(d).

(i) If EPA determines based on IUVP data or other information that the durability procedure does not achieve the durability objective of paragraph (a) of this section, EPA may withdraw approval to use the durability procedure or condition approval on modifications to the durability procedure. Such withdrawal or conditional approval will apply to future applications for certification and to the portion of the manufacturer's product line (or the entire product line) that the Administrator determines to be affected. Prior to such a withdrawal the Administrator will give the manufacturer a preliminary notice at least 60 days prior to the final

decision. During this period, the manufacturer may submit technical discussion, statistical analyses, additional data, or other information which is relevant to the decision. The Administrator will consider all information submitted by the deadline before reaching a final decision.

(j) Any manufacturer may request a hearing on the Administrator's withdrawal of approval in paragraph (i) of this section. The request must be in writing and must include a statement specifying the manufacturer's objections to the Administrator's determinations, and data in support of such objection. If, after review of the request and supporting data, the Administrator finds that the request raises a substantial factual issue, she/he must provide the manufacturer a hearing in accordance with § 86.1853–01 with respect to such issue.

[71 FR 2834, Jan. 17, 2006]

§ 86.1825–01 Durability demonstration procedures for refueling emissions.

This section applies to light-duty vehicles, light-duty trucks, and complete heavy-duty vehicles, and heavy-duty vehicles which are certified under light-duty rules as allowed under the provisions of § 86.1801–01(c) which are subject to refueling loss emission compliance. Refer to the provisions of §§ 86.1811–01, 86.1811–04, 86.1812–01, 86.1813–01, and 86.1816–04 to determine applicability of the refueling standards to different classes of vehicles for various model years. Diesel fuel vehicles may qualify for an exemption to the requirements of this section under the provisions of § 86.1810. The manufacturer shall determine a durability process that will predict the expected refueling emission deterioration of candidate in-use vehicles over their full useful life. The manufacturer shall use good engineering judgment in determining this process.

(a) *Service accumulation method.* (1) The manufacturer shall develop a service accumulation method designed to effectively predict the deterioration of candidate in-use vehicles' refueling loss emissions in actual use over its full useful life. The manufacturer shall use good engineering judgement in developing this method.

(2) The manufacturers may develop a service accumulation methods based upon whole-vehicle full-mileage accumulation, whole vehicle accelerated mileage accumulation (e.g., where 40,000 miles on a severe mileage accumulation cycle is equivalent to 100,000 miles of normal in-use driving), bench aging of individual components or systems, or other approaches approved by the Administrator.

(i) For whole vehicle mileage accumulation programs, all emission control components and systems (including both hardware and software) must be installed and operating for the entire mileage accumulation period.

(ii) Bench procedures shall simulate the aging of components or systems over the applicable useful life and shall simulate driving patterns and vehicle operational environments found in actual use. For this purpose, manufacturers may remove the emission-related components (and other components), in whole or in part, from the durability vehicle itself and deteriorate them independently. Vehicle testing for the purpose of determining deterioration factors may include the testing of durability vehicles that incorporate such bench-aged components.

(b) *Vehicle/component selection method.* The manufacturer shall determine a vehicle and component selection procedure which results in representative test vehicles and reflects good engineering judgment.

(c) The manufacturer shall calculate a deterioration factor which is applied to the refueling emission results of the emission data vehicles. The deterioration factor shall be based on a linear regression, or an other regression technique approved in advance by the Administrator. The DF will be calculated to be the difference between the full life mileage refueling loss emission level minus the stabilized mileage (e.g., 4000-mile) refueling loss emission level from the regression analysis. The DF and the full and stabilized mileage emission levels shall be rounded to two decimal places of accuracy in accordance with the Rounding-Off Method specified in ASTM E29–93a, Standard Practice for Using Significant Digits in Test Data to Determine Conformance with Specifications (incorporated by

reference, see § 86.1(b)(1). Calculated DF values of less than zero shall be changed to zero for the purposes of this paragraph.

(d) The durability process described in paragraph (a) of this section must be described in the application for certification under the provisions of § 86.1844–01.

(e) *Emission component durability*. The manufacturer shall use good engineering judgment to determine that all emission-related components are designed to operate properly for the full useful life of the vehicles in actual use.

(f) *In-use verification*. The durability program must meet the requirements of § 86.1845–01.

(g) Information obtained under §§ 86.1845–01, 86.1846–01, 86.1847–01 or from other sources shall be used by the manufacturer in developing new durability processes and/or updating existing durability processes using good engineering judgment.

[64 FR 23925, May 4, 1999, as amended at 65 FR 59974, Oct. 6, 2000]

§ 86.1825–08 Durability demonstration procedures for refueling emissions.

This section applies to 2008 and later model year light-duty vehicles, light-duty trucks, and heavy-duty vehicles which are certified under light-duty rules as allowed under the provisions of § 86.1801–01(c)(1) which are subject to refueling loss emission compliance. Optionally, a manufacturer may elect to use this section for earlier model year light-duty vehicles, light-duty trucks, and heavy-duty vehicles which are certified under light-duty rules as allowed under the provisions of § 86.1801–01(c)(1) which are subject to refueling loss emission compliance. Refer to the provisions of §§ 86.1811, 86.1812, 86.1813, 86.1814, and 86.1815 to determine applicability of the refueling standards to different classes of vehicles for various model years. Diesel fuel vehicles may qualify for an exemption to the requirements of this section under the provisions of § 86.1810.

(a) *Durability program objective*. The durability program must predict an expected in-use emission deterioration rate and emission level that effectively represents a significant majority of the distribution of emission levels and deterioration in actual use over the full useful life of candidate in-use vehicles of each vehicle design which uses the durability program.

(b) *Required durability demonstration*. Manufacturers must conduct a durability demonstration which satisfies the provisions of either paragraph (c), (d), or (e) of this section.

(c) *Whole vehicle refueling durability demonstration*. The following procedures must be used when conducting a whole vehicle durability demonstration:

(1) Mileage accumulation must be conducted using the SRC or a road cycle approved under the provisions of § 86.1823(e)(1).

(2) Mileage accumulation must be conducted for either:

(i) The applicable full useful life mileage period specified in § 86.1805, or

(ii) At least 75 percent of the full useful life mileage. In which case, the manufacturer must calculate a df calculated according to the procedures of paragraph (f)(1)(ii) of this section, except that the DF must be based upon a line projected to the full-useful life mileage using the upper 80 percent statistical confidence limit calculated from the emission data.

(3) The manufacturer must conduct at least one refueling emission test at each of the five different mileage points selected using good engineering judgement. The required testing must include testing at 5,000 miles and at the highest mileage point run during mileage accumulation (e.g. the full useful life mileage). Additional testing may be conducted by the manufacturer using good engineering judgement.

(d) *Bench aging refueling durability procedures*. Manufacturers may use bench procedures designed, using good engineering judgement, to evaluate the emission deterioration of evaporative/refueling control systems. Manufacturers may base the bench procedure on an evaluation the following potential causes of evaporative/refueling emission deterioration:

(1) Cycling of canister loading due to diurnal and refueling events;

(2) Use of various commercially available fuels, including the Tier 2 requirement to include alcohol fuel;

(3) Vibration of components;

(4) Deterioration of hoses, etc. due to environmental conditions; and

(5) Deterioration of fuel cap due to wear.

(e) *Combined whole-vehicle and bench-aging programs.* Manufacturers may combine the results of whole vehicle aging and bench aging procedures using good engineering judgement.

(f) [Reserved]

(g) *Calculation of a deterioration factor.* The manufacturer must calculate a deterioration factor which is applied to the evaporative emission results of the emission data vehicles. The deterioration factor must be based on a linear regression, or an other regression technique approved in advance by the Administrator. The DF will be calculated to be the difference between the full life mileage evaporative level minus the stabilized mileage (e.g., 4000-mile) evaporative level from the regression analysis. The full useful life regressed emission value, the stabilized mileage regressed emission value, and the DF result must be rounded to the same precision and using the same procedures as the raw emission results according to the provisions of § 86.1837–01. Calculated DF values of less than zero must be changed to zero for the purposes of this paragraph.

(h) *Emission component durability.* [Reserved] For guidance see 40 CFR 86.1845–01 (e).

(i) If EPA determines based on IUVP data or other information that the durability procedure does not achieve the durability objective of paragraph (a) of this section, EPA may withdraw approval to use the durability procedure or condition approval on modifications to the durability procedure. Such withdrawal or conditional approval will apply to future applications for certification and to the portion of the manufacturer's product line (or the entire product line) that the Administrator determines to be affected. Prior to such a withdrawal the Administrator will give the manufacturer a preliminary notice at least 60 days prior to the final decision. During this period, the manufacturer may submit technical discussion, statistical analyses, additional data, or other information which is relevant to the decision. The Administrator will consider all information submitted by the deadline before reaching a final decision.

(j) Any manufacturer may request a hearing on the Administrator's withdrawal of approval in paragraph (i) of this section. The request must be in writing and must include a statement specifying the manufacturer's objections to the Administrator's determinations, and data in support of such objection. If, after review of the request and supporting data, the Administrator finds that the request raises a substantial factual issue, she/he must provide the manufacturer a hearing in accordance with § 86.1853–01 with respect to such issue.

[71 FR 2835, Jan. 17, 2006]

§ 86.1826–01 Assigned deterioration factors for small volume manufacturers and small volume test groups.

(a) *Applicability.* This program is an option available to small volume manufacturers certified under the small volume manufacturer provisions of § 86.1838–01(b)(1) and small volume test groups certified under the small volume test group provisions of § 86.1838–01(b)(2). Manufacturers may elect to use these procedures in lieu of the requirements of §§ 86.1823, 86.1824, and 86.1825 of this subpart.

(b) *Determination of deterioration factors.* No service accumulation method or vehicle/component selection method is required. Deterioration factors for all types of regulated emissions are determined using the provisions in this paragraph. A separate assigned deterioration factor is required for each durability group. Manufacturers shall use good engineering judgment in determining deterioration factors.

(1) Manufacturers with aggregated sales of less than 301 motor vehicles and motor vehicle engines per year (determined under the provisions of § 86.1838–01(b)) may use assigned deterioration factors that the Administrator determines and prescribes.

(i) The deterioration factors will be the Administrator's estimate, periodically updated and published in a guidance document or advisory circular, of the 70th percentile deterioration factors calculated using the industry-wide

data base of previously completed durability data vehicles or engines used for certification.

(ii) If there is insufficient deterioration information to calculate an appropriate industry-wide deterioration factor (for example: a new engine technology coupled with a proven emission control system), the Administrator may, at his/her discretion, use alternative methods to develop a deterioration factor.

(2) Manufacturers with aggregated sales from and including 301 through 14,999 motor vehicles and motor vehicle engines per year (determined under the provisions of § 86.1838–01(b)) certifying vehicles equipped with proven emission control systems shall conform to the following provisions:

(i) Manufacturers shall use assigned deterioration factors that the manufacturer determines based on its good engineering judgment.

(A) The manufacturer may not use deterioration factors less than either the average or 70th percentile of all of that manufacturer's deterioration factor data, whichever is less. These minimum deterioration factors shall be calculated according to procedures in paragraph (b)(2)(ii), of this section.

(B) If the manufacturer does not have at least two data points to calculate these manufacturer specific average deterioration factors, then the deterioration factors shall be no less than the EPA supplied industry-wide deterioration factors.

(C) If there is insufficient deterioration information to calculate an appropriate industry-wide deterioration factor (for example, a new engine technology coupled with a proven emission control system), the Administrator may, at his/her discretion, use alternative methods to develop a deterioration factor.

(ii) The manufacturer's minimum deterioration factors shall be calculated using the deterioration factors from all durability groups, within the same vehicle/engine-fuel usage category (e.g., gasoline-fueled light-duty vehicle, etc.) previously certified to the same emission standards.

(A) The manufacturer shall use only deterioration factors from durability groups whose test groups were previously certified by the manufacturer and the deterioration factors shall not be included in the calculation more than once.

(B) The deterioration factors for each pollutant shall be calculated separately.

(C) The manufacturer may, at its option, limit the deterioration factors used in the calculation of the manufacturer's minimum deterioration factors to those from all similar emission control systems to the system being certified if sufficient data (i.e., from at least two certified systems) exists.

(D) All data eligible to be grouped as similar emission control system data shall be used in calculating similar system deterioration factors.

(E) Any deterioration factors used in calculating similar system deterioration factors shall not be included in calculating the manufacturer's minimum deterioration factors used to certify any of the manufacturer's remaining vehicle systems.

(3) Manufacturers with aggregated sales from 301 through 14,999 motor vehicles and motor vehicle engines per year (determined under the provisions of § 86.1838–01(b)) certifying vehicles equipped with unproven emission control systems shall conform to the following provisions:

(i) The manufacturer shall use deterioration factors that the manufacturer determines from official certification durability data generated by vehicles from durability groups representing a minimum of 25 percent of the manufacturer's sales equipped with unproven emission control systems.

(ii) The sales projections are to be based on total sales projected for each test group.

(iii) The durability data vehicle mileage accumulation and emission tests are to be conducted in accordance with § 86.1831–01.

(iv) The manufacturer must develop either deterioration factors or aged components to use on EDV testing by generating durability data in accordance with §§ 86.1823, 86.1824, and/or 86.1825 on a minimum of 25 percent of the manufacturer's projected sales (based on durability groups) that is equipped with unproven emission control systems.

(v) The manufacturer must complete the 25 percent durability requirement before the remainder of the manufacturer's sales equipped with unproven emission control systems is certified using manufacturer-determined assigned deterioration factors.

(c) *Emission component durability*. The manufacturer shall use good engineering judgment to determine that all emission-related components are designed to operate properly for the useful life of the vehicles in actual use (or alternative intervals as permitted in § 86.1805–01).

[64 FR 23925, May 4, 1999, as amended at 65 FR 59974, Oct. 6, 2000; 71 FR 2836, Jan. 17, 2006]

§ 86.1827–01 Test group determination.

This section applies to the grouping of vehicles into test groups within a durability group. The vehicles covered by an application within a durability group shall be divided into test groups based on the following criteria. The manufacturer shall use good engineering judgment in grouping vehicles into test groups.

(a) To be included in the same test group, vehicles must be identical in all following respects:

(1) Durability group;

(2) Engine displacement (within a total band width of 15 percent of the largest displacement or 50 CID, whichever is larger);

(3) Number of cylinders or combustion chambers;

(4) Arrangement of cylinders or combustion chambers (e.g. in-line, v-shaped);

(5) Subject to the same emission standards, except that a manufacturer may request to group vehicles into the same test group as vehicles subject to more stringent standards, so long as all the vehicles within the test group are certified to the most stringent standards applicable to any vehicle within that test group. Light-duty trucks which are subject to the same emission standards as light-duty vehicles with the exception of the light-duty truck idle CO standard and/or total HC standard may be included in the same test group.

(b) Where vehicles are of a type which cannot be divided into test groups based on the criteria listed above (such as non-cylinder engines), the Administrator will establish test groups for those vehicles based upon the features most related to their exhaust emission characteristics.

(c) Manufacturers may further divide groups determined under paragraph (a) of this section providing the Administrator is notified in advance of any such changes in writing.

(d) Manufacturers may request the Administrator's approval to combine vehicles into a single test group which would normally not be eligible to be in a single test group. The petition should provide:

(1) Substantial evidence that all the vehicles in the larger grouping will have the similar levels of emissions;

(2) Evidence of equivalent component durability over the vehicle's useful life;

(3) Evidence that the groups will result in sufficient in-use verification program data, appropriate tracking in use, and clear liability for the Agency's recall program; and

(4) A statement that all vehicles within a test group are certified to the most stringent standards applicable to any vehicle within that test group.

(e) Unless otherwise approved by the Administrator, a manufacturer of hybrid electric vehicles must create separate test groups based on both the type of battery technology employed by the HEV and upon features most related to their exhaust emission characteristics.

[64 FR 23925, May 4, 1999, as amended at 65 FR 6864, Feb. 10, 2000; 65 FR 59974, Oct. 6, 2000]

§ 86.1828–01 Emission data vehicle selection.

(a) *FTP and SFTP testing*. Within each test group, the vehicle configuration shall be selected which is expected to be worst-case for exhaust emission compliance on candidate in-use vehicles, considering all exhaust emission constituents, all exhaust test procedures, and the potential impact of air conditioning on test results. The selected vehicle will include an air conditioning engine code unless the worst-case vehicle configuration selected is not available with air conditioning. This vehicle configuration will be used as the EDV calibration.

(b) *Evaporative/Refueling testing.* Vehicles of each evaporative/refueling family will be divided into evaporative/refueling emission control systems.

(1) The vehicle configuration expected to exhibit the highest evaporative and/or refueling emission on candidate in-use vehicles shall be selected for each evaporative/refueling family and evaporative refueling emission system combination from among the corresponding vehicles selected for FTP and SFTP testing under paragraph (a) of this section. Separate vehicles may be selected to be tested for evaporative and refueling testing.

(2) Each test group must be represented by both evaporative and refueling testing (provided that the refueling standards are applicable) before it may be certified. That required testing may have been conducted on a vehicle in another test group provided the tested vehicle is a member of the same evaporative/refueling family and evaporative/refueling emission system combination and it was selected for testing in accordance with the provisions of paragraph (b)(1) of this section.

(3) For evaporative/refueling emission testing, the vehicle(s) selected shall be equipped with the worst-case evaporative/refueling emission hardware available on that vehicle considering such items as canister size and material, fuel tank size and material, purge strategy and flow rates, refueling characteristics, and amount of vapor generation.

(c) *Cold CO testing.* For cold temperature CO exhaust emission compliance for each durability group, the vehicle expected to emit the highest CO emissions at 20 degrees F on candidate in-use vehicles shall be selected from the test vehicles selected in accordance with paragraph (a) of this section.

(d) *Certification Short Test testing.* For CST exhaust emission compliance for each durability group, the vehicle expected to emit the highest CST emissions on candidate in-use vehicles shall be selected from the vehicles selected in accordance with paragraph (a) of this section. The manufacturer may elect to submit a compliance statement in lieu of test data under the provisions of § 86.1829–01.

(e) The manufacturer may select, using good engineering judgement, an equivalent or worst-case configuration in lieu of testing the vehicle selected in paragraphs (a) through (d) of this section. Carryover data satisfying the provisions of § 86.1839–01 may also be used in lieu of testing the configuration selected in paragraphs (a) through (d) of this section.

(f) The manufacturer shall use good engineering judgment in making selections of vehicles under this section.

§ 86.1829–01 Durability and emission testing requirements; waivers.

(a) *Durability demonstration.* (1) One durability demonstration is required for each durability group.

(2) The configuration of the DDV is determined according to the provisions of § 86.1822–01.

(3) The DDV shall be tested and accumulate service mileage according to the provisions of §§ 86.1831–01, 86.1823, 86.1824 and 86.1825. Small volume manufacturers and small volume test groups may optionally meet the requirements of § 86.1838–01.

(b) *Emissions demonstration*—(1) *FTP and SFTP Exhaust Testing*—(i) *Testing at low altitude.* One EDV shall be tested in each test group for exhaust emissions using the FTP and SFTP test procedures of subpart B of this part. The configuration of the EDV will be determined under the provisions of § 86.1828–01 of this subpart.

(ii) *Testing at high altitude.* For high-altitude exhaust emission compliance for each test group, the manufacturer shall follow one of the following two procedures:

(A) One EDV shall be tested in each test group for exhaust emissions using the FTP test procedures of subpart B of this part. The configuration of the EDV will be determined under the provisions of § 86.1828–01; or

(B) In lieu of testing vehicles according to the provisions of paragraph (b)(1)(ii)(A) of this section, a manufacturer may provide a statement in its application for certification that, based on the manufacturer's engineering evaluation of appropriate high-altitude emission testing, all light-duty vehicles, light-duty trucks, and complete heavy-duty vehicles comply with

the emission standards at high altitude.

(iii) *Data submittal waivers.* (A) In lieu of testing a methanol-fueled diesel-cycle light truck for particulate emissions a manufacturer may provide a statement in its application for certification that such light trucks comply with the applicable standards. Such a statement shall be based on previous emission tests, development tests, or other appropriate information.

(B) In lieu of testing an Otto-cycle light-duty vehicle, light-duty truck, or heavy-duty vehicle for particulate emissions for certification, a manufacturer may provide a statement in its application for certification that such vehicles comply with the applicable standards. Such a statement must be based on previous emission tests, development tests, or other appropriate information.

(C) A manufacturer may petition the Administrator for a waiver of the requirement to submit total hydrocarbon emission data. If the waiver is granted, then in lieu of testing a certification light-duty vehicle or light-duty truck for total hydrocarbon emissions the manufacturer may provide a statement in its application for certification that such vehicles comply with the applicable standards. Such a statement shall be based on previous emission tests, development tests, or other appropriate information.

(D) A manufacturer may petition the Administrator to waive the requirement to measure particulate emissions when conducting Selective Enforcement Audit testing of Otto-cycle vehicles.

(E) In lieu of testing a gasoline or diesel fueled Tier 2 or interim non-Tier 2 vehicle for formaldehyde emissions when such vehicles are certified based upon NMHC emissions, a manufacturer may provide a statement in its application for certification that such vehicles comply with the applicable standards. Such a statement must be based on previous emission tests, development tests, or other appropriate information.

(F) In lieu of testing a petroleum-fueled heavy-duty vehicle for formaldehyde emissions for certification, a manufacturer may provide a statement in its application for certification that such vehicles comply with the applicable standards. Such a statement must be based on previous emission tests, development tests, or other appropriate information.

(2) *Evaporative/Refueling testing.* Vehicles of each evaporative/refueling family will be divided into evaporative/refueling emission control systems. Applicability of the refueling test requirements of this paragraph shall be determined in accordance with the applicability of the refueling loss standards under the provisions of § 86.1810.

(i) *Testing at low altitude.* One EDV in each evaporative/refueling family and evaporative/refueling emission control system combination must be tested in accordance with the evaporative/refueling test procedure requirement of subpart B of this part. The configuration of the EDV will be determined under the provisions of § 86.1828–01. The EDV must also be tested for exhaust emission compliance using the FTP and SFTP procedures of subpart B of this part. In lieu of testing natural gas-fueled or liquefied petroleum gas-fueled vehicles, the manufacturer may provide a statement in its application for certification that, based on the manufacturer's engineering evaluation of such emission testing as the manufacturer deems appropriate, these vehicles will comply with the emission standards.

(ii) *Testing at high altitude.* For high-altitude evaporative and/or refueling emission compliance for each evaporative/refueling family, the manufacturer shall follow one of the following two procedures:

(A) One EDV in each evaporative/refueling family and evaporative/refueling emission control system combination shall be tested in accordance with the evaporative/refueling test procedure requirement of subpart B of this part. The configuration of the EDV will be determined under the provisions of § 86.1824–01. The EDV must also be tested for exhaust emissions using the FTP procedures of subpart B of this part while operated at high altitude; or

(B) In lieu of testing vehicles according to the provisions of paragraph (b)(2)(ii)(A) of this section, a manufacturer may provide a statement in its

application for certification that, based on the manufacturer's engineering evaluation of such high-altitude emission testing as the manufacturer deems appropriate, all light-duty vehicles, light-duty trucks, and complete heavy-duty vehicles comply with the emission standards at high altitude.

(iii) Optional waiver of two-diurnal evaporative certification test for gasoline- and ethanol-fueled vehicles. In lieu of testing gasoline-fueled and ethanol-fueled vehicles for the supplemental two-diurnal test sequence according to the provisions of paragraphs (b)(2)(i) and (b)(2)(ii) of this section, a manufacturer may optionally provide a statement of compliance in its application for certification that, based on the manufacturer's good engineering judgement, all light-duty vehicles, light-duty trucks and complete heavy-duty vehicles in the applicable evaporative/refueling emission family comply with the evaporative emission standard for the supplemental two-diurnal test sequence.

(A) The option to provide a statement of compliance in lieu of 2-diurnal evaporative certification test data outlined in paragraph (b)(2)(iii) of this section is limited to vehicles with conventional evaporative emission control systems (as determined by the Administrator). This option may be used for vehicles in evaporative/refueling families which are certified to the applicable two-diurnal, three-diurnal, running loss, and refueling emission standards. EPA may perform confirmatory 2-diurnal evaporative emission testing on certification test vehicles which are certified using this option (even though the manufacturer may not have performed a 2-diurnal evaporative test during the certification process). If data shows noncompliance, noncompliance will be addressed through 86.1851. As well, if data shows noncompliance, EPA may not normally allow for subsequent waivers for the applicable evaporative family.

(B) Manufacturers shall supply information if requested by EPA in support of the statement of compliance outlined in paragraph (b)(2)(iii) of this section. This information shall include evaporative calibration information for the emission-data test vehicle and for other vehicles in the evaporative/refueling family, including, but not limited to, canister type, canister volume, canister working capacity, fuel tank volume, fuel tank geometry, the type of fuel delivery system (return, returnless, variable flow fuel pump, etc.), a description of the input parameters and software strategy used to control the evaporative canister purge, the nominal purge flow volume (in bed volumes) when vehicles are driven over the 2-diurnal (FTP) driving cycle, the nominal purge flow volume (in bed volumes) when vehicles are driven over the 3-diurnal (FTP + running loss) driving cycle, and other supporting information as necessary to demonstrate that the purge flow rate calibration on the 2-diurnal test sequence is adequate to comply with the evaporative emission standard for the supplemental two-diurnal test sequence.

(3) *Cold CO Testing*. One EDV in each durability group shall be tested for cold temperature CO exhaust emission compliance in accordance with the test procedures in subpart C of this part or with alternative procedures requested by the manufacturer and approved in advance by the Administrator. The selection of which EDV and test group within the durability group will be tested for cold CO compliance will be determined under the provisions of § 86.1828–01(c).

(4) *Certification Short Test testing*. (i) To determine CST emission compliance for each durability group, the manufacturer shall follow one of the following two procedures:

(A) One EDV in each durability group shall be tested in accordance with the CST procedures set forth in subpart O of this part. The configuration of the EDV will be determined under the provisions of § 86.1828–01(d). The EDV must also be tested for exhaust emissions using the FTP and SFTP procedures of subpart B of this part; or

(B) In lieu of testing vehicles according to the provisions of § 86.1829–01(b)(4)(i)(A), a manufacturer may provide a statement in its application for certification that, based on the manufacturer's engineering evaluation of such CST testing as the manufacturer

deems appropriate, all light-duty vehicles and light-duty trucks comply with the CST emission standards.

(ii) For light-duty vehicles and light-duty trucks, a manufacturer with a test group that cannot be appropriately tested on all Certification Short Test emission test procedures described in § 86.1439 may request an exemption, as described in § 86.1427(d), from the inappropriate test(s) for purposes of demonstrating compliance with the Certification Short Test as described in subpart O of this part.

(iii) For light-duty vehicles and light-duty trucks, a manufacturer with a test group that can be appropriately tested on none of the Certification Short Test emission test procedures described in § 86.1439 may request an alternative procedure as described in § 86.1427(d).

(5) *Idle CO testing*. To determine idle CO emission compliance for light-duty trucks and complete heavy-duty vehicles, the manufacturer shall follow one of the following two procedures:

(i) For test groups containing light-duty trucks and complete heavy-duty vehicles, each EDV shall be tested in accordance with the idle CO testing procedures of subpart B of this part; or

(ii) In lieu of testing light trucks and complete heavy-duty vehicles for idle CO emissions, a manufacturer may provide a statement in its application for certification that, based on the manufacturer's engineering evaluation of such idle CO testing as the manufacturer deems appropriate, all light-duty trucks and complete heavy-duty vehicles comply with the idle CO emission standards.

(c) *Running change testing*. Running change testing shall be conducted as required under the provisions of § 86.1842–01.

(d)(1) Beginning in the 2004 model year, the exhaust emissions must be measured from all LDV/T exhaust emission data vehicles tested in accordance with the federal Highway Fuel Economy Test (HWFET; 40 CFR part 600, subpart B). The oxides of nitrogen emissions measured during such tests must represent the full useful life emissions in accordance with § 86.1823–08(f) and subsequent model year provisions. Those results are then rounded and compared with the applicable emission standard in § 86.1811–04. All data obtained from the testing required under this paragraph (d) must be reported in accordance with the procedures for reporting other exhaust emission data required under this subpart.

(2) In the event that one or more emission data vehicles fail the applicable HWFET standard in § 86.1811–04, the manufacturer may submit to the Administrator engineering data or other evidence showing that the system is capable of complying with the standard. If the Administrator finds, on the basis of an engineering evaluation, that the system can comply with the HWFET standard, he or she may accept the information supplied by the manufacturer in lieu of the test data.

(3) The provisions of paragraphs (d)(1) and (d)(2) of this section do not apply to MDPVs.

[64 FR 23925, May 4, 1999, as amended at 65 FR 6864, Feb. 10, 2000; 65 FR 59975, Oct. 6, 2000; 66 FR 5193, Jan. 18, 2001; 66 FR 19310, Apr. 13, 2001; 70 FR 72929, Dec. 8, 2005; 71 FR 2836, Jan. 17, 2006]

§ 86.1830–01 Acceptance of vehicles for emission testing.

(a) *General test vehicle requirements*. (1) All test vehicles shall be tested in the proper configurations as specified in §§ 86.1822–01, 86.1828–01, or 86.1842–01, as applicable for the type of test conducted.

(2) Components affecting emissions which are used to build test vehicles shall either be randomly selected production parts or parts verified to be in the middle 50 percent of the tolerance range. The manufacturer will determine which components affect emissions using good engineering judgment.

(3) Test vehicles must have air conditioning installed and operational if that configuration is available with air conditioning. Optional equipment must be installed or represented on test vehicles according to the provisions of § 86.1832–01.

(4) Test vehicles must receive proper scheduled maintenance as established by the manufacturer according to the provisions of § 86.1834–01(b) or (c). Unscheduled maintenance must be approved under the provisions of § 86.1834–01(d).

(5) Vehicle mileage shall be accumulated in accordance with § 86.1831–01.

(6) The road load forces and equivalent test weight used during testing will be determined according to the provisions of § 86.129–00.

(7) Test vehicles shall have the appropriate emission testing hardware installed (e.g., exhaust pipe testing flange, fuel tank drain, access ports to evaporative canisters, and fuel tank heat blanket) and shall have tires with appropriate tire wear.

(b) *Special provisions for durability data vehicles.* (1) For DDV's, the mileage at all test points shall be within 250 miles of the scheduled mileage point as required under § 86.1823–08(c)(3). Manufacturers may exceed the 250 mile upper limit if there are logistical reasons for the deviation and the manufacturer determines that the deviation will not affect the representativeness of the durability demonstration.

(2) For DDV's aged using the standard or a customized/alternative whole-vehicle cycle, all emission-related hardware and software must be installed and operational during all mileage accumulation after the 5000-mile test point.

(3) DDV's may be reconfigured before the 5000-mile test point providing that the representativeness of the emission results will not be affected. Manufacturers shall use good engineering judgment in making such determinations.

(c) *Special provisions for emission data vehicles.* (1) All EDV's shall have at least the minimum number of miles accumulated to achieve stabilized emission results according to the provisions of § 86.1831–01(c).

(2) Within a durability group, the manufacturer may alter any emission data vehicle (or other vehicles such as current or previous model year emission data vehicles, running change vehicles, fuel economy data vehicles, and development vehicles) in lieu of building a new test vehicle providing that the modification will not impact the representativeness of the vehicle's test results. Manufacturers shall use good engineering judgment in making such determinations. Development vehicles which were used to develop the calibration selected for emission data testing may not be used as the EDV for that configuration. Vehicles from outside the durability group may be altered with advance approval of the Administrator.

(3) Components used to reconfigure EDV's under the provisions of paragraph (c)(2) of this section must be appropriately aged if necessary to achieve representative emission results. Manufacturers must determine the need for component aging and the type and amount of aging required using good engineering judgment.

(4) Bench-aged hardware may be installed on an EDV for emission testing as a method of determining certification levels (projected emission levels at full or intermediate useful life) using bench aging procedures under the provisions of § 86.1823.

[64 FR 23925, May 4, 1999, as amended at 71 FR 2836, Jan. 17, 2006]

§ 86.1831–01 Mileage accumulation requirements for test vehicles.

(a) *Durability Data Vehicles.* (1) The manufacturer must accumulate mileage on DDV's using the procedures in § 86.1823.

(2) All tests required by this subpart on durability data vehicles shall be conducted within 250 miles of each of the nominal test point mileage. This ±250 mile test point mileage tolerance may be modified with the advance approval of the Administrator if the basis for the written request is to prevent an interruption of durability mileage accumulation due to test scheduling conflicts for weekends, holidays, or other similar circumstances.

(b) *Emission data vehicles and running change vehicles.* (1) The standard method of mileage accumulation for emission data vehicles and running change vehicles is mileage accumulation using either the Standard Road Cycle specified in Appendix V to this part or the Durability Driving Schedule specified in Appendix IV to this part.

(2) The manufacturer may use an alternative mileage accumulation method providing the form and extent of the service accumulation represents normal driving patterns for that vehicle, the method is consistent with good engineering judgment, and the method is

described in the application for certification.

(3) Except with the advance approval of the Administrator, all vehicles will accumulate mileage at a measured curb weight which is within 100 pounds of the estimated curb weight. If the loaded vehicle weight is within 100 pounds of being included in the next higher inertia weight class as specified in § 86.129, the manufacturer may elect to conduct the respective emission tests at higher loaded vehicle weight.

(c) The manufacturer shall determine the mileage at which the emission control system and engine combination is stabilized for emission-data testing. The manufacturer shall provide to the Administrator if requested, a record of the analysis used in making this determination. The manufacturer may elect to accumulate 2,000 miles (3,219 kilometers) or more on each test vehicle without making a determination. The manufacturer must accumulate a minimum of 1,000 miles (1,608 kilometers) on each emission data vehicle.

(d) All test vehicle mileage must be accurately determined, recorded, and reported to the Administrator upon request.

[64 FR 23925, May 4, 1999, as amended at 71 FR 2836, Jan. 17, 2006]

§ 86.1832–01 Optional equipment and air conditioning for test vehicles.

For test vehicles selected under §§ 86.1822–01 and 86.1828–01:

(a)(1) Where it is expected that more than 33 percent of a car line, within a test group, will be equipped with an item (whether that item is standard equipment or an option), the full estimated weight of that item must be included in the curb weight computation for each vehicle available with that item in that car line, within that test group.

(2) Where it is expected that 33 percent or less of the car line, within a test group, will be equipped with an item (whether that item is standard equipment or an option), no weight for that item will be added in computing the curb weight for any vehicle in that car line, within that test group, unless that item is standard equipment on the vehicle.

(3) In the case of mutually exclusive options, only the weight of the heavier option will be added in computing the curb weight.

(4) Optional equipment weighing less than three pounds per item need not be considered.

(b)(1) Where it is expected that more than 33 percent of a car line, within a test group, will be equipped with an item (whether that item is standard equipment or an option) that can reasonably be expected to influence emissions, then such items must actually be installed (unless excluded under paragraph (b)(2) of this section) on all emission data and durability data vehicles of that car line, within that test group, on which the items are intended to be offered in production. Items that can reasonably be expected to influence emissions include, but are not limited to: air conditioning, power steering, and power brakes.

(2) If the manufacturer determines by test data or engineering evaluation that the actual installation of the optional equipment required by paragraph (b)(1) of this section does not affect the emissions or fuel economy values, the optional equipment need not be installed on the test vehicle.

(3) The weight of the options must be included in the design curb weight and must also be represented in the weight of the test vehicles.

(4) The engineering evaluation, including any test data, used to support the deletion of optional equipment from test vehicles, shall be maintained by the manufacturer and be made available to the Agency upon request by the Administrator within 15 business days.

(c) Except for air conditioning, where it is expected that 33 percent or less of a car line, within a test group, will be equipped with an item (whether that item is standard equipment or an option) that can reasonably be expected to influence emissions, that item may not be installed on any emission data vehicle or durability data vehicle of that car line within that test group, unless that item is standard equipment on that vehicle or specifically required by the Administrator.

(d) Air conditioning must be installed and operational on any emission data

vehicle of any vehicle configuration that is projected to be available with air conditioning regardless of the rate of installation of air conditioning within the car line. Paragraphs (a) through (c) of this section will be used to determine whether the weight of the air conditioner will be included in the equivalent test weight calculations for emission testing.

§ 86.1833–01 Adjustable parameters.

(a) At the time that emission data vehicles are selected for the test fleet, a determination shall be made of those vehicle or engine parameters which will be subject to adjustment for certification, Selective Enforcement Audit and Production Compliance Audit testing, the adequacy of the limits, stops, seals, or other means used to inhibit adjustment, and the resulting physically adjustable ranges for each such parameter. The manufacturer shall use good engineering judgment in making such determinations and shall notify the Administrator of its determinations prior to emission data vehicle testing for the affected test groups (preferably at an annual preview meeting scheduled before the manufacturer begins certification activities for the model year).

(1) *Determining parameters subject to adjustment*. (i) The following parameters may be subject to adjustment: the idle fuel-air mixture parameter on Otto-cycle vehicles; the choke valve action parameter(s) on carbureted, Otto-cycle vehicles (or engines); or any parameter on any vehicle (Otto-cycle or diesel) which is physically capable of being adjusted, may significantly affect emissions, and was not present on the manufacturer's vehicles (or engines) in the previous model year in the same form and function.

(ii) Any other parameters on any vehicle or engine which are physically capable of being adjusted and which may significantly affect emissions may be determined to be subject to adjustment. However, the Administrator may do so only if he/she has previously notified the manufacturer that he/she might do so and has found, at the time he/she gave this notice, that the intervening period would be adequate to permit the development and application of the requisite technology, giving appropriate consideration to the cost of compliance within such period. In no event will this notification be given later than September 1 of the calendar year two years prior to the model year.

(iii) In determining the parameters subject to adjustment, the following shall be taken into consideration: the likelihood that, for each of the parameters listed in paragraphs (e)(1) (i) and (ii) of this section, settings other than the manufacturer's recommended setting will occur on in-use vehicles (or engines). In determining likelihood, such factors may be considered as information contained in the preliminary application, surveillance information from similar in-use vehicles, the difficulty and cost of gaining access to an adjustment, damage to the vehicle if an attempt is made to gain such access and the need to replace parts following such attempt, and the effect of settings other than the manufacturer's recommended setting on vehicle performance characteristics including emission characteristics.

(2)(i) A parameter may be determined to be adequately inaccessible or sealed if:

(A) In the case of an idle mixture screw, the screw is recessed within the carburetor casting and sealed with lead, thermosetting plastic, or an inverted elliptical spacer or sheared off after adjustment at the factory, and the inaccessibility is such that the screw cannot be accessed and/or adjusted with simple tools in one-half hour or for $20 (1978 dollars) or less;

(B) In the case of a choke bimetal spring, the plate covering the bimetal spring is riveted or welded in place, or held in place with nonreversible screws;

(C) In the case of a parameter which may be adjusted by elongating or bending adjustable members (e.g., the choke vacuum break), the elongation of the adjustable member is limited by design or, in the case of a bendable member, the member is constructed of a material which when bent would return to its original shape after the force is removed (plastic or spring steel materials);

(D) In the case of any parameter, the manufacturer demonstrates that adjusting the parameter to settings other than the manufacturer's recommended setting takes more than one-half hour or costs more than $20 (1978 dollars).

(ii) A physical limit or stop shall be determined to be an adequate restraint on adjustability if:

(A) In the case of a threaded adjustment, the threads are terminated, pinned, or crimped so as to prevent additional travel without breakage or need for repairs which take more than one-half hour or cost more than $20 (1978 dollars);

(B) The adjustment is ineffective at the end of the limits of travel regardless of additional forces or torques applied to the adjustment;

(C) The manufacturer demonstrates that travel or rotation limits cannot be exceeded with the use of simple and inexpensive tools (screwdriver, pliers, open-end or box wrenches, etc.) without incurring significant and costly damage to the vehicle or control system or without taking more than one-half hour or costing more than $20 (1978 dollars).

(iii) If manufacturer service manuals or bulletins describe routine procedures for gaining access to a parameter or for removing or exceeding a physical limit, stop, seal or other means used to inhibit adjustment, or if surveillance data indicate that gaining access, removing, or exceeding is likely, paragraphs (a)(2)(i) and (ii) of this section shall not apply for that parameter.

(iv) In determining the adequacy of a physical limit, stop, seal, or other means used to inhibit adjustment of a parameter not covered by paragraph (a)(2)(i) or (ii) of this section, the following shall be considered: the likelihood that it will be circumvented, removed, or exceeded on in-use vehicles. In determining likelihood, such factors may be considered as, but not limited to, information contained in the preliminary application; surveillance information from similar in-use vehicles; the difficulty and cost of circumventing, removing, or exceeding the limit, stop, seal, or other means; damage to the vehicle if an attempt is made to circumvent, remove, or exceed it and the need to replace parts following such attempt; and the effect of settings beyond the limit, stop, seal, or other means on vehicle performance characteristics other than emission characteristics.

(v) In the case of electronic components on circuit boards (such as on-board computers) the board is covered with an epoxy resin which inhibits the access to components on the board (commonly referred to as potting).

(3) Two physically adjustable ranges shall be determined for each parameter subject to adjustment:

(i)(A) In the case of a parameter determined to be adequately inaccessible or sealed, the following may be included within the physically adjustable range applicable to testing under this subpart: all settings within the production tolerance associated with the nominal setting for that parameter, as specified by the manufacturer in the application for certification or other information; or

(B) In the case of other parameters, all settings within physical limits or stops determined to be adequate restraints on adjustability shall be included within this range. The production tolerances on the location of these limits or stops may be included when determining the physically adjustable range.

(ii)(A) In the case of a parameter determined to be adequately inaccessible or sealed, only the actual settings to which the parameter is adjusted during production shall be included within the physically adjustable range applicable to testing under subparts G or K (Selective Enforcement Audit and Production Compliance Audit) of this part; or

(B) In the case of other parameters, all settings within physical limits or stops determined to be adequate restraints on adjustability, as they are actually located on the test vehicle, shall be included within the range.

(b) In lieu of making the determinations required in paragraph (a) of this section, the manufacturer may request a determination be made by the Administrator prior to emission testing. In that case, all the information discussed in paragraph (a) of this section shall be provided to the Administrator. The Administrator will respond within 90 days (excluding the elapsed time

during which additional information requested by the Administrator is being gathered by the manufacturer) following the receipt of the request for determination.

(c) If the Administrator determines that the decisions made by the manufacturer under the provisions of paragraph (a) of this section were not made using good engineering judgment, the Administrator will overrule the manufacturers' decisions and conduct testing for Certification, Selective Enforcement Audit and/or Production Compliance Audit purposes by adjusting parameters according to his/her determination of those vehicle or engine parameters subject to adjustment, the adequacy of the limits, stops, seals, or other means used to inhibit adjustment, and the resulting physically adjustable ranges for each such parameter. Furthermore, the Administrator may reject testing performed by the manufacturer which failed to follow his/her determinations.

(d) Within 30 days following receipt of notification of the Administrator's determinations made under paragraph (b) or (c) of this section, the manufacturer may request a hearing on the Administrator's determinations. The request shall be in writing, signed by an authorized representative of the manufacturer, and shall include a statement specifying the manufacturer's objections to the Administrator's determinations, and data in support of such objections. If, after review of the request and supporting data, the Administrator finds that the request raises a substantial factual issue, he shall provide the manufacturer a hearing in accordance with § 86.1853–01 with respect to such issue.

§ 86.1834–01 Allowable maintenance.

(a) Maintenance performed on vehicles, engines, subsystems, or components used to determine exhaust, evaporative or refueling emission deterioration factors, as appropriate, is classified as either emission-related or non-emission-related and each of these can be classified as either scheduled or unscheduled. Further, some emission-related maintenance is also classified as critical emission-related maintenance.

(b) This section specifies emission-related scheduled maintenance for purposes of obtaining durability data and for inclusion in maintenance instructions furnished to purchasers of new motor vehicles and under § 86.1808–01.

(1) All emission-related scheduled maintenance for purposes of obtaining durability data must occur at the same mileage intervals (or equivalent intervals if engines, subsystems, or components are used) that will be specified in the manufacturer's maintenance instructions furnished to the ultimate purchaser of the motor vehicle or engine under § 86.1808–01. This maintenance schedule may be updated as necessary throughout the testing of the vehicle/engine, provided that no maintenance operation is deleted from the maintenance schedule after the operation has been performed on the test vehicle or engine.

(2) Any emission-related maintenance which is performed on vehicles, engines, subsystems, or components must be technologically necessary to assure in-use compliance with the emission standards. Manufacturers shall determine the technological need for maintenance using good engineering judgment. The Administrator has determined that emission-related maintenance at shorter intervals than those outlined in paragraphs (b)(3) and (4) of this section is not technologically necessary to ensure in-use compliance. However, the Administrator may determine that maintenance even more restrictive (e.g., longer intervals) than that listed in paragraphs (b)(3) and (4) of this section is also not technologically necessary.

(3) Emission-related maintenance in addition to, or at shorter intervals than, that listed in paragraphs (b)(3)(i) through (vi) of this section will not be accepted as technologically necessary, except as provided in paragraph (b)(7) of this section.

(i)(A) The cleaning or replacement of light-duty vehicle or light-duty truck spark plugs shall occur at 30,000 miles of use and at 30,000-mile intervals thereafter.

(B) The cleaning or replacement of complete heavy-duty vehicle spark plugs shall occur at 25,000 miles (or 750 hours) of use and at 30,000-mile (or 750

hour) intervals thereafter, for vehicles certified for use with unleaded fuel only.

(ii) For light-duty vehicles and light-duty trucks, the adjustment, cleaning, repair, or replacement of the following items shall occur at 50,000 miles of use and at 50,000-mile intervals thereafter:

(A) Positive crankcase ventilation valve.

(B) Emission-related hoses and tubes.

(C) Ignition wires.

(D) Idle mixture.

(iii) For complete heavy-duty vehicles, the adjustment, cleaning, repair, or replacement of the following items shall occur at 50,000 miles (or 1,500 hours) of use and at 50,000-mile (1,500 hour) intervals thereafter:

(A) Positive crankcase ventilation valve.

(B) Emission-related hoses and tubes.

(C) Ignition wires.

(D) Idle mixture.

(E) Exhaust gas recirculation system related filters and coolers.

(iv) For light-duty trucks, light-duty vehicles, and complete heavy-duty vehicles, the adjustment, cleaning, repair, or replacement of the oxygen sensor shall occur at 80,000 miles (or 2,400 hours) of use and at 80,000-mile (or 2,400-hour) intervals thereafter.

(v) For light-duty trucks and light-duty vehicles, the adjustment, cleaning, repair, or replacement of the following items shall occur at 100,000 miles of use and at 100,000-mile intervals thereafter:

(A) Catalytic converter.

(B) Air injection system components.

(C) Fuel injectors.

(D) Electronic engine control unit and its associated sensors (except oxygen sensor) and actuators.

(E) Evaporative and/or refueling emission canister(s).

(F) Turbochargers.

(G) Carburetors.

(H) Superchargers.

(I) Exhaust gas recirculation system including all related filters and control valves.

(J) Mechanical fillpipe seals.

(vi) For complete heavy-duty vehicles, the adjustment, cleaning, repair, or replacement of the following items shall occur at 100,000 miles (or 3,000 hours) of use and at 100,000-mile (or 3,000 hour) intervals thereafter:

(A) Catalytic converter.

(B) Air injection system components.

(C) Fuel injectors.

(D) Electronic engine control unit and its associated sensors (except oxygen sensor) and actuators.

(E) Evaporative and/or refueling emission canister(s).

(F) Turbochargers.

(G) Carburetors.

(H) Exhaust gas recirculation system (including all related control valves and tubing) except as otherwise provided in paragraph (b)(3)(iii)(E) of this section.

(I) Mechanical fillpipe seals.

(4) For diesel-cycle light-duty vehicles and light-duty trucks, emission-related maintenance in addition to, or at shorter intervals than the following will not be accepted as technologically necessary, except as provided in paragraph (b)(7) of this section:

(i) The adjustment, cleaning, repair, or replacement of the positive crankcase ventilation valve shall occur at 50,000 miles of use and at 50,000-mile intervals thereafter.

(ii) The adjustment, cleaning, repair, or replacement shall occur at 100,000 miles of use and at 100,000-mile intervals thereafter of the following items:

(A) Fuel injectors.

(B) Turbocharger.

(C) Electronic engine control unit and its associated sensors and actuators.

(D) Particulate trap or trap-oxidizer system (including related components).

(E) Exhaust gas recirculation system including all related filters and control valves.

(F) Catalytic converter.

(G) Superchargers.

(5) [Reserved]

(6) *Critical emission-related components.* (i) The following components are defined as critical emission-related components:

(A) Catalytic converter.

(B) Air injection system components.

(C) Electronic engine control unit and its associated sensors (including oxygen sensor if installed) and actuators.

(D) Exhaust gas recirculation system (including all related filters and control valves).

(E) Positive crankcase ventilation valve.

(F) Evaporative and refueling emission control system components (excluding canister air filter).

(G) Particulate trap or trap-oxidizer system.

(H) Any other add-on emissions-related component (*i.e.,* a component whose sole or primary purpose is to reduce emissions or whose failure will significantly degrade emissions control and whose function is not integral to the design and performance of the engine.)

(ii) All critical emission-related scheduled maintenance must have a reasonable likelihood of being performed in use. The manufacturer shall be required to show the reasonable likelihood of such maintenance being performed in use, and such showing shall be made prior to the performance of the maintenance on the durability data vehicle. Critical emission-related scheduled maintenance items which satisfy one of the following conditions will be accepted as having a reasonable likelihood of the maintenance item being performed in use:

(A) Data are presented which establish for the Administrator a connection between emissions and vehicle performance such that as emissions increase due to lack of maintenance, vehicle performance will simultaneously deteriorate to a point unacceptable for typical driving.

(B) Survey data are submitted which adequately demonstrate to the Administrator that, at an 80 percent confidence level, 80 percent of such engines already have this critical maintenance item performed in use at the recommended interval(s).

(C) A clearly displayed visible signal system approved by the Administrator is installed to alert the vehicle driver that maintenance is due. A signal bearing the message ''maintenance needed'' or ''check engine,'' or a similar message approved by the Administrator, shall be actuated at the appropriate mileage point or by component failure. This signal must be continuous while the engine is in operation and not be easily eliminated without performance of the required maintenance. Resetting the signal shall be a required step in the maintenance operation. The method for resetting the signal system shall be approved by the Administrator.

(D) A manufacturer may desire to demonstrate through a survey that a critical maintenance item is likely to be performed without a visible signal on a maintenance item for which there is no prior in-use experience without the signal. To that end, the manufacturer may in a given model year market up to 200 randomly selected vehicles per critical emission-related maintenance item without such visible signals, and monitor the performance of the critical maintenance item by the owners to show compliance with paragraph (b)(6)(ii)(B) of this section. This option is restricted to two consecutive model years and may not be repeated until any previous survey has been completed. If the critical maintenance involves more than one test group, the sample will be sales weighted to ensure that it is representative of all the groups in question.

(E) The manufacturer provides the maintenance free of charge, and clearly informs the customer that the maintenance is free in the instructions provided under § 86.1808–01.

(F) Any other method which the Administrator approves as establishing a reasonable likelihood that the critical maintenance will be performed in use.

(iii) Visible signal systems used under paragraph (b)(6)(ii)(C) of this section are considered an element of design of the emission control system. Therefore, disabling, resetting, or otherwise rendering such signals inoperative without also performing the indicated maintenance procedure is a prohibited act under section 203(a)(3) of the Clean Air Act (42 U.S.C. 7522(a)(3)).

(7) *Changes to scheduled maintenance.* (i) For maintenance practices that existed prior to the 1980 model year, only the maintenance items listed in paragraphs (b)(3) and (4) of this section are currently considered by EPA to be emission-related. The Administrator may, however, determine additional scheduled maintenance items that existed prior to the 1980 model year to be emission-related by announcement in a

FEDERAL REGISTER Notice. In no event may this notification occur later than September 1 of the calendar year two years prior to the affected model year.

(ii) In the case of any new scheduled maintenance, the manufacturer must submit a request for approval to the Administrator for any maintenance that it wishes to recommend to purchasers and perform during durability determination. New scheduled maintenance is that maintenance which did not exist prior to the 1980 model year, including that which is a direct result of the implementation of new technology not found in production prior to the 1980 model year. The manufacturer must also include its recommendations as to the category (i.e., emission-related or non-emission-related, critical or non-critical) of the subject maintenance and, for suggested emission-related maintenance, the maximum feasible maintenance interval. Such requests must include detailed evidence supporting the need for the maintenance requested, and supporting data or other substantiation for the recommended maintenance category and for the interval suggested for emission-related maintenance. Requests for new scheduled maintenance must be approved prior to the introduction of the new maintenance. The Administrator will then designate the maintenance as emission-related or non-emission-related. For maintenance items established as emission-related, the Administrator will further designate the maintenance as critical if the component which receives the maintenance is a critical component under paragraph (b)(6) of this section. For each maintenance item designated as emission-related, the Administrator will also establish a technologically necessary maintenance interval, based on industry data and any other information available to EPA. Designations of emission-related maintenance items, along with their identification as critical or non-critical, and establishment of technologically necessary maintenance intervals, will be announced in the FEDERAL REGISTER.

(iii) Any manufacturer may request a hearing on the Administrator's determinations in this paragraph (b)(7). The request shall be in writing and shall include a statement specifying the manufacturer's objections to the Administrator's determinations, and data in support of such objections. If, after review of the request and supporting data, the Administrator finds that the request raises a substantial factual issue, he shall provide the manufacturer a hearing in accordance with § 86.1853–01 with respect to such issue.

(c) Non-emission-related scheduled maintenance which is reasonable and technologically necessary (e.g., oil change, oil filter change, fuel filter change, air filter change, cooling system maintenance, adjustment of idle speed, governor, engine bolt torque, valve lash, injector lash, timing, adjustment of air pump drive belt tension, lubrication of the exhaust manifold heat control valve, lubrication of carburetor choke linkage, re-torquing carburetor mounting bolts, etc.) may be performed on durability data vehicles at the least frequent intervals recommended by the manufacturer to the ultimate purchaser, (e.g., not at the intervals recommended for severe service).

(d) *Unscheduled maintenance on durability data vehicles.* (1) Unscheduled maintenance may be performed during the testing used to determine deterioration factors, except as provided in paragraphs (d)(2) and (3) of this section, only under the following provisions defined in paragraphs (d)(1) (i) through (iii) of this section:

(i) A fuel injector or spark plug may be changed if a persistent misfire is detected.

(ii) Readjustment of an Otto-cycle vehicle cold-start enrichment system may be performed if there is a problem of stalling.

(iii) Readjustment of the engine idle speed (curb idle and fast idle) may be performed in addition to that performed as scheduled maintenance under paragraph (c) of this section if the idle speed exceeds the manufacturer's recommended idle speed by 300 rpm or more, or if there is a problem of stalling.

(2) Any other unscheduled vehicle, emission control system, or fuel system adjustment, repair, removal, disassembly, cleaning, or replacement

during testing to determine deterioration factors shall be performed (using good engineering judgment) only in the following circumstances:

(i) The part failure or system malfunction, or the repair of such failure or malfunction, does not render the vehicle or engine unrepresentative of vehicles or engines in use and does not require direct access to the combustion chamber, except for spark plug, fuel injection component, or removable prechamber removal or replacement.

(ii) The need for maintenance or repairs is indicated by an overt indication of malfunction such as persistent misfiring, engine stalling, overheating, fluid leakage, loss of oil pressure, excessive fuel consumption, or excessive power loss. The Administrator shall be given the opportunity to verify the existence of an overt indication of part failure and/or vehicle/engine malfunction (e.g., misfiring, stalling, black smoke), or an activation of an audible and/or visible signal, prior to the performance of any maintenance to which such overt indication or signal is relevant under the provisions of this section.

(iii) The OBD system of a durability data vehicle representing any test group certifying fully to the Federal OBD requirements as specified in § 86.1806–01(a) through (h) has specifically detected the problem and has illuminated the malfunction indicator light.

(3) Emission measurement may not be used as a means of determining the need for unscheduled maintenance under paragraph (d)(2) of this section, except under the following conditions:

(i) The Administrator may approve unscheduled maintenance on durability data vehicles based upon a significant change in emission levels that indicates a vehicle or engine malfunction. In these cases the Administrator may first approve specific diagnostic procedures to identify the source of the problem. The Administrator may further approve of specific corrections to the problem after the problem has been identified. The Administrator may only approve the corrective action after it is determined that:

(A) The malfunction was caused by nonproduction build practices or by a previously undetected design problem;

(B) The malfunction will not occur in production vehicles or engines in use; and

(C) The deterioration factor generated by the durability data vehicle or engine will remain unaffected by the malfunction or by the corrective action (e.g., the malfunction was present for only a short period of time before detection, replacement parts are functionally representative of the proper mileage or hours, etc.).

(ii) Following any unscheduled maintenance approved under paragraph (d)(3)(i) of this section, the manufacturer shall perform an after-maintenance emission test. If the Administrator determines that the after-maintenance emission levels for any pollutant indicates that the deterioration factor is no longer representative of production, the Administrator may disqualify the durability data vehicle or engine.

(4) If a part failure or system malfunction occurrence and/or repair has rendered the vehicle/engine unrepresentative of vehicles in use, the vehicle/engine shall not be used for determining deterioration factors.

(5) Repairs to vehicle components of a durability data vehicle other than the engine, emission control system, or fuel system, shall be performed only as a result of part failure, vehicle system malfunction, or with the advance approval of the Administrator.

(e) *Maintenance on emission data vehicles and engines.* (1) Adjustment of engine idle speed on emission data vehicles may be performed once before the low-mileage/low-hour emission test point. Any other engine, emission control system, or fuel system adjustment, repair, removal, disassembly, cleaning, or replacement on emission data vehicles shall be performed only with the advance approval of the Administrator.

(2) Repairs to vehicle components of an emission data vehicle other than the engine, emission control system, or fuel system, shall be performed only as a result of part failure, vehicle system malfunction, or with the advance approval of the Administrator.

(f) Equipment, instruments, or tools may not be used to identify malfunctioning, maladjusted, or defective engine components unless the same or equivalent equipment, instruments, or tools will be available to dealerships and other service outlets and:

(1) Are used in conjunction with scheduled maintenance on such components; or

(2) Are used subsequent to the identification of a vehicle or engine malfunction, as provided in paragraph (d)(2) of this section for durability data vehicles or in paragraph (e)(1) of this section for emission data vehicles; or

(3) Unless specifically authorized by the Administrator.

(g) Complete emission tests (see §§ 86.106–96 through 86.145–82) are required, unless waived by the Administrator, before and after scheduled maintenance approved for durability data vehicles. The manufacturer may perform emission tests before unscheduled maintenance. Complete emission tests are required after unscheduled maintenance which may reasonably be expected to affect emissions. The Administrator may waive the requirement to test after unscheduled maintenance. These test data may be submitted weekly to the Administrator, but shall be air posted or delivered within 7 days after completion of the tests, along with a complete record of all pertinent maintenance, including a preliminary engineering report of any malfunction diagnosis and the corrective action taken. A complete engineering report shall be delivered to the Administrator concurrently with the manufacturer's application for certification.

(h) When air conditioning SFTP exhaust emission tests are required, the manufacturer must document that the vehicle's air conditioning system is operating properly and in a representative condition. Required air conditioning system maintenance is performed as unscheduled maintenance and does not require the Administrator's approval.

[64 FR 23925, May 4, 1999, as amended at 65 FR 59975, Oct. 6, 2000; 70 FR 40443, July 13, 2005]

§ 86.1835–01 Confirmatory certification testing.

(a) *Testing by the Administrator.* (1) The Administrator may require that any one or more of the test vehicles be submitted to the Agency, at such place or places as the Agency may designate, for the purposes of conducting emissions tests. The Administrator may specify that such testing be conducted at the manufacturer's facility, in which case instrumentation and equipment specified by the Administrator shall be made available by the manufacturer for test operations. Any testing conducted at a manufacturer's facility pursuant to this paragraph shall be scheduled by the manufacturer as promptly as possible.

(i) The Administrator may adjust or cause to be adjusted any adjustable parameter of an emission-data vehicle which the Administrator has determined to be subject to adjustment for certification testing in accordance with § 86.1833–01(a)(1), to any setting within the physically adjustable range of that parameter, as determined by the Administrator in accordance with § 86.1833–01(a)(3), prior to the performance of any tests to determine whether such vehicle or engine conforms to applicable emission standards, including tests performed by the manufacturer under § 86.1829–01(b). However, if the idle speed parameter is one which the Administrator has determined to be subject to adjustment, the Administrator shall not adjust it to a setting which causes a higher engine idle speed than would have been possible within the physically adjustable range of the idle speed parameter on the engine before it accumulated any dynamometer service, all other parameters being identically adjusted for the purpose of the comparison. The Administrator, in making or specifying such adjustments, will consider the effect of the deviation from the manufacturer's recommended setting on emissions performance characteristics as well as the likelihood that similar settings will occur on in-use light-duty vehicles, light-duty trucks, or complete heavy-duty vehicles. In determining likelihood, the Administrator will consider factors such as, but not limited to, the

effect of the adjustment on vehicle performance characteristics and surveillance information from similar in-use vehicles.

(ii) For those vehicles parameters which the Administrator has not determined to be subject to adjustment during testing in accordance with § 86.1833–01(a)(1), the vehicle presented to the Administrator for testing shall be calibrated within the production tolerances applicable to the manufacturer's specifications to be shown on the vehicle label (see § 86.1807–01) as specified in the application for certification. If the Administrator determines that a vehicle is not within such tolerances, the vehicle will be adjusted, at the facility designated by the Administrator, prior to the test and an engineering report shall be submitted to the Administrator describing the corrective action taken. Based on the engineering report, the Administrator will determine if the vehicle will be used as an emission data vehicle.

(2) If the Administrator determines that the test data developed on an emission data vehicle under paragraph (a)(1) of this section would cause that vehicle to fail under the provisions of § 86.1841–01, then the following procedure shall be observed:

(i) The manufacturer may request a retest. Before the retest, those vehicle or engine parameters which the Administrator has not determined to be subject to adjustment for certification testing in accordance with § 86.1833-01(a)(1) may be readjusted to manufacturer's specification, if these adjustments were made incorrectly prior to the first test. The Administrator may adjust or cause to be adjusted any parameter which the Administrator has determined to be subject to adjustment to any setting within the physically adjustable range of that parameter, as determined by the Administrator in accordance with § 86.1833–01(a)(3). Other maintenance or repairs may be performed in accordance with § 86.1834–01. All work on the vehicle shall be done at such location and under such conditions as the Administrator may prescribe.

(ii) The vehicle will be retested by the Administrator and the results of this test shall comprise the official data for the emission-data vehicle.

(3) If sufficient durability data are not available at the time of any emission test conducted under paragraph (a)(1) of this section to enable the Administrator to determine whether an emission-data vehicle would fail, the manufacturer may request a retest in accordance with the provisions of paragraph (a)(2) of this section. If the manufacturer does not promptly make such request, he shall be deemed to have waived the right to a retest. A request for retest must be made before the manufacturer removes the vehicle from the test premises.

(4) Retesting for fuel economy reasons may be conducted under the provisions of 40 CFR 600.008–01.

(b) *Manufacturer-conducted confirmatory testing.* (1) If the Administrator determines not to conduct a confirmatory test under the provisions of paragraph (a) of this section, light-duty vehicle and light-duty truck manufacturers will conduct a confirmatory test at their facility after submitting the original test data to the Administrator whenever any of the conditions listed in paragraphs (b)(1)(i) through (v) of this section exist, and complete heavy-duty vehicles manufacturers will conduct a confirmatory test at their facility after submitting the original test data to the Administrator whenever the conditions listed in paragraph (b)(1)(i) or (b)(1)(ii) of this section exist, as follows:

(i) The vehicle configuration has previously failed an emission standard;

(ii) The test exhibits high emission levels determined by exceeding a percentage of the standards specified by the Administrator for that model year;

(iii) The fuel economy value of the test as measured in accordance with the procedures in 40 CFR Part 600 is higher than expected based on procedures approved by the Administrator;

(iv) The fuel economy value as measured in accordance with the procedures in Part 600 of this title, is close to a Gas Guzzler Tax threshold value based on tolerances established by the Administrator for that model year; or

(v) The fuel economy value as measured in accordance with the procedures in Part 600 of this title, is a potential

fuel economy leader for a class of vehicles based on Administrator provided cut points for that model year.

(2) If the Administrator selects the vehicle for confirmatory testing based on the manufacturer's original test results, the testing shall be conducted as ordered by the Administrator. In this case, the manufacturer-conducted confirmatory testing specified under paragraph (b)(1) of this section would not be required.

(3) For light-duty vehicles, and light-duty trucks, the manufacturer shall conduct a retest of the FTP or highway test if the difference between the fuel economy of the confirmatory test and the original manufacturer's test equals or exceeds three percent (or such lower percentage to be applied consistently to all manufacturer conducted confirmatory testing as requested by the manufacturer and approved by the Administrator).

(i) For use in the fuel economy program described in 40 CFR part 600, the manufacturer may, in lieu of conducting a retest, accept as official the lower of the original and confirmatory test fuel economy results.

(ii) The manufacturer shall conduct a second retest of the FTP or highway test if the fuel economy difference between the second confirmatory test and the original manufacturer test equals or exceeds three percent (or such lower percentage as requested by the manufacturer and approved by the Administrator) and the fuel economy difference between the second confirmatory test and the first confirmatory test equals or exceeds three percent (or such lower percentage as requested by the manufacturer and approved by the Administrator). In lieu of conducting a second retest, the manufacturer may accept as official (for use in the fuel economy program) the lowest of the original test, the first confirmatory test, and the second confirmatory test fuel economy results.

(c) *Official test determination.* (1) Whenever the Administrator or the manufacturer conducts a confirmatory test segment on a test vehicle, the results of that test segment, unless subsequently invalidated by the Administrator, shall comprise the official data for that test segment for the vehicle at the prescribed test point and the manufacturer's original test data for that test segment for that prescribed test point shall not be used in determining compliance with emission standards.

(i) If the Administrator or the manufacturer conducts more than one passing, valid, confirmatory test, the results from the first passing, valid confirmatory test shall be considered official and used in determining compliance with emission standards.

(ii) Official test results for fuel economy purposes are determined in accordance with the provisions of 40 CFR 600.008–01.

(iii) The Administrator may stop a test after any evaporative test segment and use as official data any valid results obtained up to that point in the test, as described in subpart B of this part.

(2) Whenever the Administrator or the manufacturer does not conduct a confirmatory test on a test vehicle at a test point, the manufacturer's original test data will be accepted as the official data for that point.

(i) If the Administrator makes a determination based on testing under paragraph (a) of this section (or other appropriate correlation test data), that there is a lack of correlation between the manufacturer's test equipment or procedures and the test equipment or procedures used by the Administrator, no manufacturer's test data will be accepted for purposes of certification until the reasons for the lack of correlation are determined and the validity of the data is established by the manufacturer.

(ii) If the Administrator has reasonable basis to believe that any test data submitted by the manufacturer is not accurate or has been obtained in violation of any provisions of this subpart, the Administrator may refuse to accept that data as the official data pending retesting or submission of further information.

(iii) If the manufacturer conducts more than one test on an emission data vehicle in the same configuration (excluding confirmatory tests run under paragraph (b) of this section), the data from the last test in that series of tests on that vehicle, will constitute the official data.

(d) Upon request of the manufacturer, the Administrator may issue a conditional certificate of conformity for a test group which has not completed the Administrator testing required under paragraph (a) of this section. Such a certificate will be issued based upon the condition that the confirmatory testing be completed in an expedited manner and that the results of the testing be in compliance with all standards and procedures.

(1) If, based on this testing or any other information, the Administrator later determines that the vehicles included in this test group do not meet the applicable standards, the Administrator will notify the manufacturer that the certificate is suspended. The certificate may be suspended in whole or in part as determined by the Administrator. Upon such a notification, the manufacturer must immediately cease the introduction of the affected vehicles into commerce. The manufacturer may request a hearing to appeal the Administrators decision using the provisions of § 86.1853–01.

(2) Production of vehicles by a manufacturer under the terms of this paragraph (d) will be deemed to be a consent to recall all vehicles in the test group which the Administrator determines do not meet applicable standards, and to cause such nonconformity to be remedied at no expense to the owner.

[64 FR 23925, May 4, 1999, as amended at 65 FR 59976, Oct. 6, 2000; 66 FR 19310, Apr. 13, 2001]

§ 86.1836–01 Manufacturer-supplied production vehicles for testing.

Any manufacturer obtaining certification under this subpart shall supply to the Administrator, upon request, a reasonable number of production vehicles selected by the Administrator which are representative of the engines, emission control systems, fuel systems, and transmission offered and typical of production models available for sale under the certificate. These vehicles shall be supplied for testing at such time and place and for such reasonable periods as the Administrator may require.

§ 86.1837–01 Rounding of emission measurements.

(a) Unless otherwise specified, the results of all emission tests shall be rounded to the number of places to the right of the decimal point indicated by expressing the applicable emission standard of this subpart to one additional significant figure, in accordance with the Rounding-Off Method specified in ASTM E29–93a, Standard Practice for Using Significant Digits in Test Data to Determine Conformance with Specifications (incorporated by reference; see § 86.1).

(b) Fleet average NO_X value calculations, where applicable, must be rounded before comparing with the applicable fleet average standard and calculating credits generated or needed as follows: manufacturers must round to the same number of significant figures that are contained in the quantity of vehicles in the denominator of the equation used to compute the fleet average NO_X emissions, but to no less than one more decimal place than that of the applicable fleet average standard.

[64 FR 23925, May 4, 1999, as amended at 65 FR 6864, Feb. 10, 2000]

§ 86.1838–01 Small volume manufacturer certification procedures.

(a) The small-volume manufacturers certification procedures described in paragraphs (b) and (c) of this section are optional. Small-volume manufacturers may use these optional procedures to demonstrate compliance with the general standards and specific emission requirements contained in this subpart.

(b) *Eligibility requirements*—(1) *Small volume manufacturers.* (i) The optional small-volume manufacturers certification procedures apply to LDV/Ts and MDPVs produced by manufacturers with sales in all states and territories of the United States, including all vehicles and engines imported under provisions of 40 CFR 85.1505 and 85.1509 (for the model year in which certification is sought) of fewer than 15,000 units (LDV/Ts, MDPVs, heavy-duty vehicles and heavy-duty engines combined).

(ii) If the aggregated sales in all states and territories of the United

States of the manufacturer, as determined in paragraph (b)(3) of this section are fewer than 15,000 units, the manufacturer (or each manufacturer in the case of manufacturers in an aggregated relationship) may certify under the provisions of paragraph (c) of this section.

(2) *Small volume test groups*. (i) If the aggregated sales in all states and territories of the United States, as determined in paragraph (b)(3) of this section are equal to or greater than 15,000 units, then the manufacturer (or each manufacturer in the case of manufacturers in an aggregated relationship) will be allowed to certify a number of units under the small volume test group certification procedures in accordance with the criteria identified in paragraphs (b)(2)(ii) through (iv) of this section.

(ii) If there are no additional manufacturers in an aggregated relationship meeting the provisions of paragraph (b)(3) of this section, then the manufacturer may certify whole test groups whose total aggregated sales (including heavy-duty engines) are less than 15,000 units using the small volume provisions of paragraph (c) of this section.

(iii) If there is an aggregated relationship with another manufacturer which satisfies the provisions of paragraph (b)(3) of this section, then the following provisions shall apply:

(A) If none of the manufacturers own 50 percent or more of another manufacturer in the aggregated relationship, then each manufacturer may certify whole test groups whose total aggregated sales (including heavy-duty engines) are less than 15,000 units using the small volume provisions of paragraph (c) of this section.

(B) If any of the manufacturers own 50 percent or more of another manufacturer in the aggregated relationship, then the limit of 14,999 units must be shared among the manufacturers in such a relationship. In total for all the manufacturers involved in such a relationship, aggregated sales (including heavy-duty engines) of up to 14,999 units may be certified using the small volume provisions of paragraph (c) of this section. Only whole test groups shall be eligible for small volume status under paragraph (c) of this section.

(iv) In the case of a joint venture arrangement (50/50 ownership) between two manufacturers, each manufacturer retains its eligibility for 14,999 units under the small-volume test group certification procedures, but the joint venture must draw its maximum 14,999 units from the units allocated to its parent manufacturers. Only whole test groups shall be eligible for small volume status under paragraph (c) of this section.

(3) *Sales aggregation for related manufacturers*. The projected or actual sales from different firms shall be aggregated in the following situations:

(i) Vehicles and/or engines produced by two or more firms, one of which is 10 percent or greater part owned by another;

(ii) Vehicles and/or engines produced by any two or more firms if a third party has equity ownership of 10 percent or more in each of the firms;

(iii) Vehicles and/or engines produced by two or more firms having a common corporate officer(s) who is (are) responsible for the overall direction of the companies;

(iv) Vehicles and/or engines imported or distributed by all firms where the vehicles and/or engines are manufactured by the same entity and the importer or distributor is an authorized agent of the entity.

(c) Small-volume manufacturers and/or small volume test groups shall demonstrate compliance with the all applicable sections of this subpart except as provided in paragraphs (c)(1) and (2) of this section. Small volume manufacturers and/or test groups may optionally meet the following requirements:

(1) Durability demonstration. Use the provisions of § 86.1826–01 rather than the requirements of §§ 86.1823, 86.1824, and/or 86.1825.

(2) *In-use verification testing*. See § 86.1845–01 for applicability of in-use verification testing to small volume manufacturers and small volume test groups except as noted in this paragraph (c)(2).

(i) Small volume in-use verification test vehicles may be procured from customers or may be owned by, or under the control of the manufacturer, provided that the vehicle has accumulated mileage in typical operation on

public streets and has received typical maintenance.

(ii) In lieu of procuring small volume in-use verification test vehicles that have a minimum odometer reading of 50,000 miles, a manufacturer may demonstrate to the satisfaction of the Agency that, based on owner survey data, the average mileage accumulated after 4 years for a given test group is less than 50,000 miles. The Agency may approve a lower minimum odometer reading based on such data.

(iii) The provisions of § 86.1845–01(c)(2) and § 86.1845–04(c)(2) that require one vehicle of each test group during high mileage in-use verification testing to have a minimum odometer mileage of 75 percent of the full useful life mileage for Tier 1 and NLEV LDV/Ts, or 90,000 (or 105,000) miles for Tier 2 and interim non-Tier 2 vehicles, do not apply.

(iv) Manufacturers intending to use the provisions of paragraphs (c)(2)(i) or (ii) of this section shall submit to the Agency, prior to the certification of the subject vehicles, a plan detailing how these provisions will be met.

[64 FR 23925, May 4, 1999, as amended at 65 FR 6864, Feb. 10, 2000; 67 FR 72826, Dec. 6, 2002; 71 FR 2836, Jan. 17, 2006]

§ 86.1839–01 Carryover of certification data.

(a) In lieu of testing an emission-data or durability vehicle selected under § 86.1822–01, § 86.1828–01, or § 86.1829–01, and submitting data therefrom, a manufacturer may submit exhaust emission data, evaporative emission data and/or refueling emission data, as applicable, on a similar vehicle for which certification has been obtained or for which all applicable data required under § 86.1845–01 has previously been submitted. To be eligible for this provision, the manufacturer must use good engineering judgment and meet the following criteria:

(1) In the case of durability data, the manufacturer must determine that the previously generated durability data represent a worst case or equivalent rate of deterioration for all applicable emission constituents compared to the configuration selected for durability demonstration.

(i) Prior to certification, the Administrator may require the manufacturer to provide data showing that the distribution of catalyst temperatures of the selected durability configuration is effectively equivalent or lower than the distribution of catalyst temperatures of the vehicle configuration which is the source of the previously generated data.

(ii) For the 2001, 2002, and 2003 model years only, paragraph (a)(1) of this section does not apply to the use of exhaust emission deterioration factors meeting the requirements of § 86.1823–01(c)(2).

(2) In the case of emission data, the manufacturer must determine that the previously generated emissions data represent a worst case or equivalent level of emissions for all applicable emission constituents compared to the configuration selected for emission compliance demonstration.

(b) In lieu of using newly aged hardware on an EDV as allowed under the provisions of § 86.1823–08(f)(2), a manufacturer may use similar hardware aged for an EDV previously submitted, provided that the manufacturer determines that the previously aged hardware represents a worst case or equivalent rate of deterioration for all applicable emission constituents for durability demonstration.

[64 FR 23925, May 4, 1999, as amended at 71 FR 2836, Jan. 17, 2006]

§ 86.1840–01 Special test procedures.

(a) The Administrator may, on the basis of written application by a manufacturer, prescribe test procedures, other than those set forth in this part, for any light-duty vehicle, light-duty truck, or complete heavy-duty vehicle which the Administrator determines is not susceptible to satisfactory testing by the procedures set forth in this part.

(b) If the manufacturer does not submit a written application for use of special test procedures but the Administrator determines that a light-duty vehicle, light-duty truck, or complete heavy-duty vehicle is not susceptible to satisfactory testing by the procedures set forth in this part, the Administrator shall notify the manufacturer in writing and set forth the reasons for

such rejection in accordance with the provisions of § 86.1848(a)(2).

[65 FR 59976, Oct. 6, 2000]

§ 86.1841–01 Compliance with emission standards for the purpose of certification.

(a) Certification levels of a test vehicle will be calculated for each emission constituent applicable to the test group for both full and intermediate useful life as appropriate.

(1) If the durability demonstration procedure used by the manufacturer under the provisions of §§ 86.1823, 86.1824, or 86.1825 requires a DF to be calculated, the DF shall be applied to the official test results determined in § 86.1835–01(c) for each regulated emission constituent and for full and intermediate useful life, as appropriate, using the following procedures:

(i) For additive DF's, the DF will be added to the emission result. The sum will be rounded to the same level of precision as the standard for the constituent at full and/or intermediate useful life, as appropriate. This rounded sum is the certification level for that emission constituent and for that useful life mileage.

(ii) For multiplicative DFs, the DF will be multiplied by the emission result for each regulated constituent. The product will be rounded to the same level of precision as the standard for the constituent at full and intermediate useful life, as appropriate. This rounded product is the certification level for that emission constituent and for that useful life mileage.

(iii) For the SFTP composite standard of NMHC+NO_X, the measured results of NMHC and NO_X must each be adjusted by their corresponding deterioration factors before the composite NMHC+NO_X certification level is calculated. Where the applicable FTP exhaust hydrocarbon emission standard is an NMOG standard, the applicable NMOG deterioration factor must be used in place of the NMHC deterioration factor, unless otherwise approved by the Administrator.

(2) If the durability demonstration procedure used by the manufacturer under the provisions of §§ 86.1823, 86.1824, or 86.1825, as applicable, requires testing of the EDV with aged emission components, the official results of that testing determined under the provisions of § 86.1835–01(c) shall be rounded to the same level of precision as the standard for each regulated constituent at full and intermediate useful life, as appropriate. This rounded emission value is the certification level for that emission constituent at that useful life mileage.

(3) [Reserved]

(4) The rounding required in paragraph (a) of this section shall be conducted in accordance with the provisions of § 86.1837–01.

(b) To be considered in compliance with the standards for the purposes of certification, the certification levels for the test vehicle calculated in paragraph (a) of this section shall be less than or equal to the standards for all emission constituents to which the test group is subject, at both full and intermediate useful life as appropriate for that test group.

(c) Every test vehicle of a test group must comply with all applicable exhaust emission standards before that test group may be certified.

(d) Every test vehicle of an evaporative/refueling family must comply with all applicable evaporative and/or refueling emission standards before that family may be certified.

(e) Unless otherwise approved by the Administrator, manufacturers must not use Reactivity Adjustment Factors (RAFs) in their calculation of the certification level of any pollutant for any vehicle except for LDVs and LLDTs participating in the National Low Emission Vehicle (NLEV) program described in subpart R of this part, regardless of the fuel used in the test vehicle.

[64 FR 23925, May 4, 1999, as amended at 65 FR 6864, Feb. 10, 2000; 66 FR 19310, Apr. 13, 2001; 71 FR 2836, Jan. 17, 2006]

§ 86.1842–01 Addition of a vehicle after certification; and changes to a vehicle covered by certification.

(a) *Addition of a car line after certification.* (1) If a manufacturer proposes to add to its product line a new car line

of the same test group as vehicles previously certified but which was not described in the application for certification when the test vehicle(s) representing other vehicles of that combination was certified, it shall notify the Administrator. This notification shall include a full description of the vehicle to be added.

(2) The manufacturer shall perform such tests on the test vehicle(s) representing the vehicle to be added which would have been required if the vehicle had been included in the original application for certification.

(3) If, after a review of the test reports and data submitted by the manufacturer, and data derived from any testing conducted under § 86.1835–01, the Administrator determines that the test vehicle(s) or test engine(s) meets all applicable standards, the appropriate certificate will be amended accordingly. If the Administrator determines that the test vehicle(s) does not meet applicable standards, she/he will proceed under § 86.1850–01.

(b) *Changes to the configuration of vehicles covered by a Certificate of Conformity*. (1) A manufacturer will notify the Administrator concurrently with (or in advance of) any change or addition in production vehicles which creates a new vehicle configuration within the car lines covered in a certified test group, giving a full description of the change. Such a change is referred to as a running change. Upon notification, the manufacturer may begin production of the running change if the manufacturer determines that following the change all affected vehicles will still meet the applicable emission standards.

(i) Such notification shall include a full description of the addition or change and any supporting documentation the manufacturer may desire to include to support the manufacturer's determination in accordance with § 86.1844-01.

(ii) The manufacturer's determination that the addition or change does not cause noncompliance shall be based on an engineering evaluation of the addition or change and/or testing.

(2) The Administrator may require that additional emission testing be performed to support the manufacturer's determination submitted in paragraph (b)(1) of this section. If additional testing is required the Administrator shall proceed in accordance with paragraph (a)(3) of this section. Additional test data, if requested, must be provided within 30 days of the request or the manufacturer must rescind the addition or change immediately. The Administrator may grant additional time to complete testing. If based on this additional testing or any other information, the Administrator determines that the vehicles affected by the addition or change do not meet the applicable standards the Administrator will notify the manufacturer to rescind the addition or change immediately upon receipt of the notification.

(c) Election to produce vehicles under this section will be deemed to be a consent to recall all vehicles which the Administrator determines under paragraph (a) or (b) of this section do not meet applicable standards, and to cause such nonconformity to be remedied at no expense to the owner.

§ 86.1843–01 General information requirements.

(a) A manufacturer must submit a separate Application for Certification (Application) for each durability group in a format approved by the Administrator and in multiple copies as designated by the Administrator. Any information within the Application which is unique to a specific test group must be submitted for each test group.

(b) Any manufacturer that fails to comply with any information requirements of §§ 86.1843–01 and 86.1844–01 may be subject to the following provisions:

(1) The Application (Part 1 and Part 2) and any additional information as designated by the Administrator shall be submitted for all durability groups prior to certification for subsequent model years, until otherwise notified by the Administrator. The Application shall be updated concurrently with every running change.

(2) Provisions of § 86.1850–01 may be imposed.

(3) Civil penalties and remedial action as applicable under the Clean Air Act may be imposed.

(c) *Part 1 of the Application*. Part 1, which shall include the items listed in

§ 86.1844–01(d), must be submitted to the Administrator before a certificate of conformity will be issued.

(d) *Part 2 of the Application*. Part 2, which shall include the items listed in § 86.1844–01(e), must be submitted to the Administrator by January 1st of the applicable model year. If a test group is certified less than 60 days prior to January 1st of the applicable model year, Part 2 must be submitted to the Administrator within 90 days of the effective date on the applicable certificate of conformity.

(e) *Running change submissions*. Each running change notification, as required under § 86.1842–01, must include the information listed in § 86.1844–01(f) and shall be submitted to the Administrator concurrently with, or in advance of, the implementation of any change incorporated onto production vehicles.

(f) *Updates to the Application for Certification*. (1) The manufacturer must submit an update to the Part 1 Application by January 1st of the applicable model year to incorporate any running changes and/or corrections which occurred after certification. If a test group is certified less than 60 days prior to January 1st of the applicable model year, this update may be submitted to the Administrator within 90 days of the effective date on the applicable certificate of conformity.

(2) The manufacturer must submit a final update to Part 1 and Part 2 of the Application by January 1st of the subsequent model year to incorporate any applicable running changes or corrections which occurred between January 1st of the applicable model year and the end of the model year. A manufacturer may request the Administrator to grant an extension (of no more than 90 days) for submittal of the final update. The request must clearly indicate the circumstances necessitating the extension.

(3) The manufacturer may not use updates to its application to correct a misbuild situation with respect to vehicles already introduced into commerce.

(g) *Information to be submitted upon request*. Upon written request by the Administrator, a manufacturer shall submit any information as described in § 86.1844–01 within 15 business days. A manufacturer may request the Administrator to grant an extension. The request must clearly indicate the circumstances necessitating the extension.

(h) *In-use information requirements*. All information requirements of the in-use verification and confirmatory programs of §§ 86.1845–01 and 86.1846–01 must be met by the due dates listed in § 86.1847–01.

§ 86.1844–01 Information requirements: Application for certification and submittal of information upon request.

(a) All information listed in this section must be submitted to the Agency according to the requirements specified in § 86.1843–01.

(b) Nothing in this section limits the Administrator's discretion to require the manufacturer to submit additional records not specifically required by this section.

(c) Routine emission test records shall be retained by the manufacturer for a period of one (1) year after issuance of all certificates of conformity to which they relate. All records, other than routine emission test records, required to be produced by the manufacturer under this title shall be made available upon written request by the Administrator for a period of eight years after issuance of all certificates of conformity to which they relate.

(d) *Part 1 Application*. Part 1 must contain the following items:

(1) Correspondence and communication information, such as names, mailing addresses, phone and fax numbers, and e-mail addresses of all manufacturer representatives authorized to be in contact with EPA compliance staff. The address where official documents, such as certificates of conformity, are to be mailed must be clearly identified. At least one U.S. contact must be provided.

(2) A description of the durability group in accordance with the criteria listed in § 86.1820–01, or as otherwise used to group a product line.

(3) A description of applicable evaporative/refueling families in accordance with the criteria listed in § 86.1821–01,

or as otherwise used to group a product line.

(4) Durability information. (i) A description of the durability method used to establish useful life durability, including exhaust and evaporative/refueling emission deterioration factors as required in §§ 86.1823, 86.1824 and 86.1825 when applicable.

(ii) The equivalency factor required to be calculated in § 1823–06(e)(iii)(B), when applicable.

(5) A description of each test group in accordance with the criteria listed in § 86.1827–01 or as otherwise used to group a product line.

(6) Identification and description of all vehicles for which testing is required by §§ 86.1822–01 and 86.1828–01 to obtain a certificate of conformity.

(7) A comprehensive list of all test results, including official certification levels, and the applicable intermediate and full useful life emission standards to which the test group is to be certified as required in § 86.1829–01.

(8) A statement that all applicable vehicles will conform with the emission standards for which emission data is not being provided, as allowed under § 86.1829–01. The statement shall clearly identify the standards for which emission testing was not completed.

(9) Information which describes each emission control diagnostic system required by § 86.1806–01 including:

(i) A description of the functional operation characteristics of the diagnostic system;

(ii) The general method of detecting malfunctions for each emission-related powertrain component;

(iii) Any deficiencies, including resolution plans and schedules.

(10) A description of all flexible or dedicated alternate fuel vehicles including, but not limited to, the fuel and/or percentage of alternate fuel for all such vehicles.

(11) A list of all auxiliary emission control devices (AECD) installed on any applicable vehicles, including a justification for each AECD, the parameters they sense and control, a detailed justification of each AECD which results in a reduction in effectiveness of the emission control system, and rationale for why the AECD is not a defeat device as defined under § 86.1809–01.

(12) Identification and description of all vehicles covered by each certificate of conformity to be produced and sold within the U.S. The description must be sufficient to identify whether any given in-use vehicle is, or is not, covered by a given certificate of conformity, the test group and the evaporative/refueling family to which it belongs and the standards that are applicable to it, by matching readily observable vehicle characteristics and information given in the emission control information label (and other permanently attached labels) to indicators in the Part 1 Application. In addition, the description must be sufficient to determine for each vehicle covered by the certificate, all appropriate test parameters and any special test procedures necessary to conduct an official certification exhaust or evaporative emission test as was required by this subpart to demonstrate compliance with applicable emission standards. The description shall include, but is not limited to, information such as model name, vehicle classification (light-duty vehicle, light-duty truck, or complete heavy-duty vehicle), sales area, engine displacement, engine code, transmission type, tire size and parameters necessary to conduct exhaust emission tests such as equivalent test weight, curb and gross vehicle weight, test horsepower (with and without air conditioning adjustment), coast down time, shift schedules, cooling fan configuration, etc. and evaporative tests such as canister working capacity, canister bed volume and fuel temperature profile. The Part 1 may include ranges for test parameters in lieu of actual values.

(13) Projected U.S. vehicle sales volumes for each test group and evaporative/refueling family combination organized in such a way to determine projected compliance with any applicable implementation schedules or minimum sales requirements as specified in § 86.1810 or as otherwise required by this chapter.

(14) A request for a certificate of conformity for each test group after all required testing has been completed. The request must be signed by an authorized manufacturer representative and

include a statement that the test group complies with all applicable regulations contained within this chapter.

(15) For HEVs, unless otherwise approved by the Administrator, the information required by the ''California Exhaust Emission Standards and Test Procedures for 2003 and Subsequent Model Zero-Emission Vehicles, and 2001 and Subsequent Model Hybrid Electric Vehicles, in the Passenger Car, Light-Duty Truck and Medium-duty Vehicle Classes'' must be supplied. These procedures are incorporated by reference (see § 86.1).

(16) (i) For Tier 2 and interim non-Tier 2 vehicles beginning with the 2004 model year, a statement indicating that the manufacturer has conducted an engineering analysis of the complete exhaust system to ensure that the exhaust system has been designed:

(A) To facilitate leak-free assembly, installation and operation for the full useful life of the vehicle; and

(B) To facilitate that such repairs as might be necessary on a properly maintained and used vehicle can be performed in such a manner as to maintain leak-free operation, using tools commonly available in a motor vehicle dealership or independent repair shop for the full useful life of the vehicle.

(ii) The analysis must cover the exhaust system and all related and attached components including the air injection system, if present, from the engine block manifold gasket surface to a point sufficiently past the last catalyst and oxygen sensor in the system to assure that leaks beyond that point will not permit air to reach the oxygen sensor or catalyst under normal operating conditions.

(iii) A ''leak-free'' system is one in which leakage is controlled so that it will not lead to a failure of the certification exhaust emission standards in-use.

(iv) The provisions of paragraphs (d)(16)(i) and (ii) do not apply to vehicles whose certification is carried over from the NLEV program or carried across from the Cal LEV I program.

(e) *Part 2 Application*. Part 2 must contain the following items:

(1) A list of part numbers of all emission-related components and AECDs for each emission control system, including those found on actual components. The part numbers shall be organized by engine code or other similar classification scheme.

(2) Basic calibration information, organized by engine code (or other similar classification scheme), for the major components of the fuel system, EGR system, ignition system, oxygen sensor(s) and thermostat. Examples of major components and associated calibration information include, but are not limited to; fuel pump and fuel pump flow rate, fuel pressure regulator and regulated fuel pressure, EGR valve and EGR exhaust gas flow rate at specified vacuum levels, EGR vacuum regulator and regulated vacuum, EGR orifice and orifice diameter, basic engine timing, timing RPM, idle rpm, spark plug gap, oxygen sensor output (mV), and thermostat opening temperature.

(3) Identification and description of all vehicles covered by each certificate of conformity to be produced and sold within the U.S. The description must be sufficient to identify whether any given in-use vehicle is, or is not, covered by a given certificate of conformity, the test group and the evaporative/refueling family to which it belongs and the standards that are applicable to it, by matching readily observable vehicle characteristics and information given in the emission control information label (and other permanently attached labels) to indicators in the Part 1 Application. In addition, the description must be sufficient to determine for each vehicle covered by the certificate, all appropriate test parameters and any special test procedures necessary to conduct an official certification exhaust or evaporative emission test as was required by this subpart to demonstrate compliance with applicable emission standards. The description shall include, but is not limited to, information such as model name, vehicle classification (light-duty vehicle, light-duty truck, or complete heavy-duty vehicle), sales area, engine displacement, engine code, transmission type, tire size and parameters necessary to conduct exhaust emission tests such as equivalent test weight, curb and gross vehicle weight, test horsepower (with

and without air conditioning adjustment), coast down time, shift schedules, cooling fan configuration, etc and evaporative tests such as canister working capacity, canister bed volume and fuel temperature profile. Actual values must be provided for all parameters.

(4) Final U.S. vehicle sales volumes for each test group and evaporative/refueling family combination organized in such a way to verify compliance with any applicable implementation schedules. Final sales are not required until the final update to the Part 2 Application at the end of the model year.

(i) The manufacturer may petition the Administrator to allow actual volume produced for U.S. sale to be used in lieu of actual U.S. sales. The petition must establish that production volume is functionally equivalent to sales volume.

(ii) The U.S. sales volume shall be based on the location of the point of sale to a dealer, distributor, fleet operator, broker, or any other entity which comprises the point of first sale.

(5) Copies of all service manuals, service bulletins and instructions regarding the use, repair, adjustment, maintenance, or testing of such vehicles relevant to the control of crankcase, exhaust or evaporative emissions, as applicable, issued by the manufacturer (in written or electronic form) for use by other manufacturers, assembly plants, distributors, dealers, and ultimate purchasers. These shall be submitted to the Agency when they are made available to the public and must be updated as appropriate throughout the useful life of the corresponding vehicles.

(6) The NMOG/NMHC and HCHO to NMHC ratios established according to § 86.1845–04.

(f) Running change submissions. A manufacturer shall submit to the Administrator a notification of all running changes as required in accordance with §§ 86.1842–01 and 86.1843–01 at the time each change is incorporated into production. Each running change notification shall include:

(1) A detailed description of the change;

(2) The reason for the change;

(3) The portion of the product line that is affected by the change, including information sufficient to identify whether any given in-use vehicle includes the change;

(4) The effect the change will have on emissions;

(5) Any test data that is determined to be necessary to demonstrate compliance with applicable emission standards; and

(6) A summary report for each test group which provides an overview of all running changes that have been incorporated since certification.

(g) The manufacturer shall provide the following information, or other information as deemed necessary by the Administrator, to the Agency upon written request by the Administrator. This includes any information, or explanations of such information specified in paragraphs (d), (e), and (f) of this section.

(1) A detailed description of the basis for all good engineering judgment decisions that were required to be made by the manufacturer. These include, but are not limited to, placement of vehicles into durability and test groups, the appropriateness of a durability process for future model years, worst-case vehicle selections for durability and emission data purposes, and carry-over or carry-across of emission test data.

(2) The basis used for all compliance statements submitted under this section. Each statement must be supported by the manufacturer using good engineering judgment and should include any emission test data, development test data, or other supporting information deemed necessary. This includes information necessary to demonstrate compliance with any emission standards for which a compliance statement was submitted in lieu of actual emission test data as allowed under § 86.1810.

(3) Detailed technical descriptions of emission-related components and AECDs, including schematic diagrams and hose and wire routings which describe the fundamental operating characteristics of each emission control system.

(4) Detailed calibration specifications for all emission-related components and AECDs.

(5) Any information necessary to demonstrate that no defeat devices are present on any vehicles covered by a certificate including, but not limited to, a description of the technology employed to control CO emissions at intermediate temperatures, as applicable.

(6) The following information describing any adjustable parameters:

(i) A list of those parameters which are physically capable of being adjusted (including those adjustable parameters for which access is difficult) and that, if adjusted to settings other than the manufacturer's recommended setting, may affect emissions;

(ii) A specification of the manufacturer's intended physically adjustable range of each such parameter, and the production tolerances of the limits or stops used to establish the physically adjustable range;

(iii) A description of the limits or stops used to establish the manufacturer's intended physically adjustable range of each adjustable parameter, or any other means used to inhibit adjustment;

(iv) The nominal or recommended setting, and the associated production tolerances, for each such parameter;

(v) The specifications used during all emission testing required by this subpart.

(7) A history of each motor vehicle used for certification testing, including a general description of the buildup of the vehicle and engine. Each history shall begin when any of the selection or buildup activities occur and should include details of the use of the vehicle for development testing. Each history must include a description of the origin and selection process for fuel system components, fuel injection components and emission control system components and specify the steps taken to assure that the certification vehicle will be representative of production vehicles.

(8) A record of all emission tests performed on all durability and emission data vehicles required to be tested by this subpart including test results, the date and purpose of each test, and the number of miles accumulated on the vehicle.

(9) A record and description of any significant events (including extraordinary events such as vehicle accidents or dynamometer runaway) affecting any certification test vehicle, including all maintenance, servicing or tests performed to diagnose engine or emission control system performance. The date and time of each event and an explanation must be included.

(10) For vehicles with non-integrated refueling emission control systems, a description of the drivedown used to purge the refueling canister and a description of the procedures used to determine the number of equivalent UDDS cycles required to purge the refueling canisters, as determined from the fuel economy on the UDDS applicable to the test vehicle of that evaporative/refueling family and emission control system combination required to use a volume of fuel equal to 85% of fuel tank volume and from subpart B of this part.

(11) A description of all procedures, including any special procedures, used to comply with applicable test requirements of this subpart. Any special procedures used to establish durability data or emission deterioration factors required to be determined under §§ 86.1823–01, 86.1824–01 and 86.1825–01 and to conduct emission tests required to be performed on applicable emission data vehicles under § 86.1829–01 according to test procedures contained within this Title must also be included.

(12) A description of any unique procedures required to perform evaporative/refueling emission tests for all vehicles in each evaporative/refueling family and a description of the method used to develop those unique procedures, including canister working capacity, canister bed volume and fuel temperature profile for the running loss test.

(13) A description of the method to be used to decode vehicle identification numbers.

(14) For complete heavy-duty vehicles only, all hardware (including scan tools) and documentation necessary for EPA to read, interpret, and store (in engineering units if applicable) any information broadcast by an engine's on-

board computers and electronic control modules which relates in anyway to emission control devices and auxiliary emission control devices, provided that such hardware, passwords, or documentation exists and is not otherwise commercially available. Passwords include any information necessary to enable generic scan tools or personal computers access to proprietary emission related information broadcast by an engine's on-board computer, if such passwords exist. This requirement includes access by EPA to any proprietary code information which may be broadcast by an engine's on-board computer and electronic control modules. Information which is confidential business information must be marked as such. Engineering units refers to the ability to read, interpret, and store information in commonly understood engineering units, for example, engine speed in revolutions per minute or per second, injection timing parameters such as start of injection in degree's before top-dead center, fueling rates in cubic centimeters per stroke, vehicle speed in milers per hour or per kilometer.

(h) *In-use information requirements.* Manufacturers must submit the information required in § 86.1847–01.

(i) For exhaust emission testing for Tier 2 and interim non-Tier 2 vehicles, if approved by the Administrator in advance, manufacturers may submit exhaust emission test data generated under California test procedures to comply with any certification and in-use testing requirements under this subpart. The Administrator may require supporting information to establish that differences between California and Federal exhaust testing procedures and fuels will not produce significant differences in emission results. The Administrator may require that in-use testing be performed using Federal test fuels as specified in § 86.113–04(a)(1).

[64 FR 23925, May 4, 1999, as amended at 65 FR 6865, Feb. 10, 2000; 65 FR 59976, Oct. 6, 2000; 71 FR 2837, Jan. 17, 2006]

§ 86.1845–01 Manufacturer in-use verification testing requirements.

(a) *General requirements.* A manufacturer light-duty vehicles, light-duty trucks, and complete heavy-duty vehicles shall test, or cause to have tested a specified number of light-duty vehicles, light-duty trucks, and complete heavy-duty vehicles. Such testing shall be conducted in accordance with the provisions of this section. For purposes of this section, the term vehicle shall include light-duty vehicles, light-duty trucks, and complete heavy-duty vehicles.

(b) *Low mileage testing.* [Reserved]

(c) *High-mileage testing*—(1) *Test groups.* Testing must be conducted for each test group.

(2) *Vehicle mileage.* All test vehicles must have a minimum odometer mileage of 50,000 miles. At least one vehicle of each test group must have a minimum odometer mileage of 75% of useful life. See § 86.1838–01(c)(2) for small volume manufacturer mileage requirements.

(3) *Number of test vehicles.* For each test group, the minimum number of vehicles that must be tested is specified in Table S01–06 and Table S01–07 of this paragraph (c)(3). After testing the minimum number of vehicles of a specific test group as specified in Table S01–06 and Table S01–07 of this paragraph (c)(3), a manufacturer may test additional vehicles upon request and approval by the Agency prior to the initiation of the additional testing. Any additional testing must be completed within the testing completion requirements shown in § 86.1845–01(c)(4). The request and Agency approval (if any) shall apply to test groups on a case by case basis and apply only to testing under this paragraph. In addition to the testing specified in Table S01–06 and Table S02–07 of this paragraph (c)(3), a manufacturer shall test one vehicle from each evaporative/refueling family for evaporative/refueling emissions. If a manufacturer believes it is unable to procure the test vehicles necessary to test the required number of vehicles in a test group as specified in Table S01–06 or Table S01–07 of this paragraph (c)(3), the manufacturer may request, subject to Administrator approval, a decreased sample size for that test group. The request shall include a description of the methods the manufacturer has used to procure the required number of vehicles. The approval of any such request, and the

substitution of an alternative sample size requirement for the test group, will be based on a review of the procurement efforts made by the manufacturer to determine if all reasonable steps have been taken to procure the required test group size. Tables S01–06 and S01–07 follow:

TABLE S01–06—SMALL VOLUME MANUFACTURERS

49 and 50 State total sales [1]	1–5000	5001–14,999
High Mileage	Voluntary	2

[1] Manufacturer's total annual sales.

TABLE S01–07—LARGE VOLUME MANUFACTURERS

49 and 50 State annual sales [1]	1–5000 [2]	5001–14,999 [2]	1–50,000 [3]	50,001–250,000	>250,000
High Mileage	Voluntary	2	4	5	6

[1] Sales by test group.
[2] Total annual production of groups eligible for testing under small volume sampling plan is capped at a maximum of 14,999 vehicle 49 or 50 state annual sales, or a maximum of 4,500 vehicle California only sales per model year, per large volume manufacturer.
[3] Sampling plan applies to all of a manufacturer's remaining groups in this sales volume category when the maximum annual cap on total sales of small groups eligible for the small volume sampling plan is exceeded.

(4) *Initiation and completion of testing.* Testing of a test group (or evaporative refueling family) must commence within 4 years of the end of production of the test group (or evaporative/refueling family) and be completed within 5 years of the end of production of the test group (or evaporative/refueling family).

(5) *Emission testing.* (i) Each test vehicle shall be tested in accordance with the Federal Test Procedure and the US06 portion of the Supplemental Federal Test Procedure as described in subpart B of this part, when such test vehicle is tested for compliance with applicable exhaust emission standards under this subpart. The US06 portion of the SFTP is not required to be performed on vehicles certified in accordance with the National LEV provisions of subpart R of this part. One test vehicle from each test group shall receive a Federal Test Procedure at high altitude. The test vehicle tested at high altitude is not required to be one of the same test vehicles tested at low altitude. The test vehicle tested at high altitude is counted when determining the compliance with the requirements shown in Table S01–06 and Table S01–07 in paragraph (c)(3) of this section or the expanded sample size as provided for in this paragraph (c).

(ii) For non-gaseous fueled vehicles, one test vehicle of each evaporative/refueling family shall be tested in accordance with the supplemental 2-diurnal-plus-hot-soak evaporative emission and refueling emission procedures described in subpart B of this part, when such test vehicle is tested for compliance with applicable evaporative emission and refueling standards under this subpart. For gaseous fueled vehicles, one test vehicle of each evaporative/refueling family shall be tested in accordance with the 3-diurnal-plus-hot-soak evaporative emission and refueling emission procedures described in subpart B of this part, when such test vehicle is tested for compliance with applicable evaporative emission and refueling standards under this subpart. The test vehicles tested to fulfill the evaporative/refueling testing requirement of this paragraph (c)(5)(ii) will be counted when determining compliance with the minimum number of vehicles as specified in Table S01–06 and Table S01–07 in paragraph (c)(3) of this section for testing under paragraph (c)(5)(i) of this section only if the vehicle is also tested for exhaust emissions under the requirements of paragraph (c)(5)(i) of this section.

(6) Each test vehicle not rejected based on the criteria specified in Appendix II to this Subpart shall be tested in as-received condition.

(7) A manufacturer may conduct subsequent diagnostic maintenance and/or

testing on any vehicle. Any such maintenance and/or testing shall be reported to the Agency as specified in § 86.1847–01.

(d) *Test vehicle procurement.* (1) Vehicles tested under this section shall be procured pursuant to the provisions of this paragraph (d). Vehicles shall be procured from the group of persons who own or lease vehicles registered in the procurement area.

(2) Vehicles shall be procured from persons which own or lease the vehicle, excluding commercial owners/lessees which are owned or controlled by the vehicle manufacturer, using the procedures described in Appendix I to this subpart. See § 86.1838(c)(2)(i) for small volume manufacturer requirements.

(3) *Geographical limitations.* (i) Test groups certified to 50-state standards: For low altitude testing no more than fifty percent of the test vehicles may be procured from California. The test vehicles procured from the 49 state area must be procured from a location with a heating degree day 30 year annual average equal to or greater than 4000.

(ii) Test groups certified to 49 state standards: The test vehicles procured from the 49 state area must be procured from a location with a heating degree day 30 year annual average equal to or greater than 4000.

(iii) Vehicles procured for high altitude testing may be procured from any area located above 4000 feet.

(4) Vehicles may be rejected for procurement or testing under this section if they meet one or more of the rejection criteria in Appendix II of this subpart. Vehicles may also be rejected after testing under this section if they meet one or more of the rejection criteria in Appendix II of this subpart. Any vehicle rejected after testing must be replaced in order that the number of test vehicles in the sample comply with the sample size requirements of this section. Any post-test vehicle rejection and replacement procurement and testing must take place within the testing completion requirements of this section.

(e) *Testing facilities, procedures, quality assurance and quality control*—(1) *Lab equipment and procedural requirements.* The manufacturer shall utilize a test laboratory that is in accordance with the equipment and procedural requirements of subpart B to conduct the testing required by this section.

(2) The manufacturer shall notify the Agency of the name and location of the testing laboratory(s) to be used to conduct testing of vehicles of each model year conducted pursuant to this section. Such notification shall occur at least thirty working days prior to the initiation of testing of the vehicles of that model year.

(3) *Correlation.* The manufacturer shall document correlation traceable to the Environmental Protection Agency's National Vehicle and Fuel Emission Laboratory for its test laboratory utilized to conduct the testing required by this section.

[64 FR 23925, May 4, 1999, as amended at 65 FR 59977, Oct. 6, 2000; 70 FR 72929, Dec. 8, 2005]

§ 86.1845–04 Manufacturer in-use verification testing requirements.

(a) *General requirements.* (1) A manufacturer of LDVs, LDTs, MDPVs and/or complete HDVs must test, or cause to have tested, a specified number of LDVs, LDTs, MDPVs and complete HDVs. Such testing must be conducted in accordance with the provisions of this section. For purposes of this section, the term vehicle includes light-duty vehicles, light-duty trucks and medium-duty vehicles.

(2) Unless otherwise approved by the Administrator, no emission measurements made under the requirements of this section may be adjusted by Reactivity Adjustment Factors (RAFs).

(3) Upon a manufacturer's written request, prior to in-use testing, that presents information to EPA regarding pre-conditioning procedures designed solely to remove the effects of high sulfur in gasoline from vehicles produced through the 2007 model year, EPA will consider allowing such procedures on a case-by-case basis. EPA's decision will apply to manufacturer in-use testing conducted under this section and to any in-use testing conducted by EPA. Such procedures are not available for complete HDVs.

(b) *Low-mileage testing*—(1) *Test groups.* Testing must be conducted for each test group.

(2) *Vehicle mileage*. All test vehicles must have a minimum odometer mileage of 10,000 miles.

(3) *Number of test vehicles*. For each test group, the minimum number of vehicles that must be tested is specified in Table S04–06 and Table S04–07 of this paragraph (b)(3). After testing the minimum number of vehicles of a specific test group as specified in Table S04–06 or S04–07 of this paragraph (b)(3), a manufacturer may test additional vehicles upon request and approval by the Agency prior to the initiation of the additional testing. Any additional testing must be completed within the testing completion requirements shown in § 86.1845–04(b)(4). The request and Agency approval (if any) shall apply to test groups on a case by case basis and apply only to testing under this paragraph. Separate approval will be required to test additional vehicles under paragraph (c) of this section. In addition to the testing specified in Table S04–06 and Table S04–07 of this paragraph (b)(3), a manufacturer shall test one vehicle from each evaporative/refueling family for evaporative/refueling emissions. If a manufacturer believes it is unable to procure the test vehicles necessary to test the required number of vehicles in a test group, the manufacturer may request, subject to Administrator approval, a decreased sample size for that test group. The request shall include a description of the methods the manufacturer has used to procure the required number of vehicles. The approval of any such request, and the substitution of an alternative sample size requirement for the test group, will be based on a review of the procurement efforts made by the manufacturer to determine if all reasonable steps have been taken to procure the required test group size. Tables S04–06 and S04–07 follow:

TABLE S04–06—SMALL VOLUME MANUFACTURERS

49 and 50 State total sales [1]	1–5000	5001–14,999
Low Mileage	Voluntary	0
High Mileage	Voluntary	2

[1] Manufacturer's total annual sales.

TABLE S04–07—LARGE VOLUME MANUFACTURERS

49 and 50 State annual sales [1]	1–5000 [2]	5001–14,999 [2]	1–50,000 [3]	50,001–250,000	>250,000
Low Mileage	Voluntary	0	2	3	4
High Mileage	Voluntary	2	4	5	6

[1] Sales by test group.
[2] Total annual production of groups eligible for testing under small volume sampling plan is capped at a maximum of 14,999 vehicle 49 or 50 state annual sales, or a maximum of 4,500 vehicle California only sales per model year, per large volume manufacturer.
[3] Sampling plan applies to all of a manufacturer's remaining groups in this sales volume category when the maximum annual cap on total sales of small groups eligible for the small volume sampling plan is exceeded.

(4) *Completion of testing*. Testing of the vehicles in a test group and evaporative/refueling family must be completed within one year of the end of production of that test group (or evaporative/refueling family) for that model year.

(5) *Emission testing*. (i) Each test vehicle of a test group shall be tested in accordance with the Federal Test Procedure and the US06 portion of the Supplemental Federal Test Procedure as described in subpart B of this part, when such test vehicle is tested for compliance with applicable exhaust emission standards under this subpart.

(ii) For non-gaseous fueled vehicles, one test vehicle of each evaporative/refueling family shall be tested in accordance with the supplemental 2-diurnal-plus-hot-soak evaporative emission and refueling emission procedures described in subpart B of this part, when such test vehicle is tested for compliance with applicable evaporative emission and refueling standards under this subpart. For gaseous fueled vehicles,

one test vehicle of each evaporative/refueling family shall be tested in accordance with the 3-diurnal-plus-hot-soak evaporative emission and refueling emission procedures described in subpart B of this part, when such test vehicle is tested for compliance with applicable evaporative emission and refueling standards under this subpart. The test vehicles tested to fulfill the evaporative/refueling testing requirement of this paragraph (b)(5)(ii) will be counted when determining compliance with the minimum number of vehicles as specified in Table S04–06 and Table S04–07 in paragraph (b)(3) of this section for testing under paragraph (b)(5)(i) of this section only if the vehicle is also tested for exhaust emissions under the requirements of paragraph (b)(5)(i) of this section.

(6) Each test vehicle not rejected based on the criteria specified in Appendix II to this Subpart shall be tested in as-received condition.

(7) A manufacturer may conduct subsequent diagnostic maintenance and/or testing of any vehicle. Any such maintenance and/or testing shall be reported to the Agency as specified in § 86.1847–01.

(c) *High-mileage testing*—(1) *Test groups*. Testing must be conducted for each test group.

(2) Vehicle mileage:

(i) All test vehicles must have a minimum odometer mileage of 50,000 miles. At least one vehicle of each test group must have a minimum odometer mileage of 75 percent of the full useful life mileage. See § 86.1838–01(c)(2) for small volume manufacturer mileage requirements; or

(ii) For engine families certified for a useful life of 150,000 miles, at least one vehicle must have a minimum odometer mileage of 105,000 miles. See § 86.1838–01(c)(2) for small volume manufacturer mileage requirements.

(3) *Number of test vehicles*. For each test group, the minimum number of vehicles that must be tested is specified in Table S04–06 and Table S04–07 in paragraph (b)(3) of this section. After testing the minimum number of vehicles of a specific test group as specified in Table S04–06 and Table S04–07 in paragraph (b)(3) of this section, a manufacturer may test additional vehicles upon request and approval by the Agency prior to the initiation of the additional testing. Any additional testing must be completed within the testing completion requirements shown in § 86.1845–04(c)(4). The request and Agency approval (if any) shall apply to test groups on a case by case basis and apply only to testing under this paragraph (c). In addition to the testing specified in Table S04–06 and Table S04–07 in paragraph (b)(3) of this section, a manufacturer shall test one vehicle from each evaporative/refueling family for evaporative/refueling emissions. If a manufacturer believes it is unable to procure the test vehicles necessary to test the required number of vehicles in a test group as specified in Table S04–06 or Table S04–07 in paragraph (b)(3) of this section, the manufacturer may request, subject to Administrator approval, a decreased sample size for that test group. The request shall include a description of the methods the manufacturer has used to procure the required number of vehicles. The approval of any such request, and the substitution of an alternative sample size requirement for the test group, will be based on a review of the procurement efforts made by the manufacturer to determine if all reasonable steps have been taken to procure the required test group size.

(4) *Initiation and completion of testing*. Testing of a test group (or evaporative refueling family) must commence within 4 years of the end of production of the test group (or evaporative/refueling family) and be completed within 5 years of the end of production of the test group (or evaporative/refueling family).

(5) *Emission testing*. (i) Each test vehicle shall be tested in accordance with the Federal Test Procedure and the US06 portion of the Supplemental Federal Test Procedure as described in subpart B of this part, when such test vehicle is tested for compliance with applicable exhaust emission standards under this subpart. The US06 portion of the SFTP is not required to be performed on vehicles certified in accordance with the National LEV provisions of subpart R of this part. One test vehicle from each test group shall receive a

Federal Test Procedure at high altitude. The test vehicle tested at high altitude is not required to be one of the same test vehicles tested at low altitude. The test vehicle tested at high altitude is counted when determining the compliance with the requirements shown in Table S04–06 and Table S04–07 in paragraph (b)(3) of this section or the expanded sample size as provided for in this paragraph (c).

(ii) For non-gaseous fueled vehicles, one test vehicle of each evaporative/refueling family shall be tested in accordance with the supplemental 2-diurnal-plus-hot-soak evaporative emission procedures described in subpart B of this part, when such test vehicle is tested for compliance with applicable evaporative emission and refueling standards under this subpart. For gaseous fueled vehicles, one test vehicle of each evaporative/refueling family shall be tested in accordance with the 3-diurnal-plus-hot-soak evaporative emission procedures described in subpart B of this part, when such test vehicle is tested for compliance with applicable evaporative emission and refueling standards under this subpart. The test vehicles tested to fulfill the evaporative/refueling testing requirement of this paragraph (b)(5)(ii) will be counted when determining compliance with the minimum number of vehicles as specified in Table S04–06 and table S04–07 in paragraph (b)(3) of this section for testing under paragraph (b)(5)(i) of this section only if the vehicle is also tested for exhaust emissions under the requirements of paragraph (b)(5)(i) of this section.

(6) Each test vehicle not rejected based on the criteria specified in Appendix II to this subpart shall be tested in as-received condition.

(7) A manufacturer may conduct subsequent diagnostic maintenance and/or testing on any vehicle. Any such maintenance and/or testing shall be reported to the Agency as specified in § 86.1847–01.

(d) *Test vehicle procurement.* (1) Vehicles tested under this section shall be procured pursuant to the provisions of this paragraph (d). Vehicles shall be procured from the group of persons who own or lease vehicles registered in the procurement area.

(2) Vehicles shall be procured from persons which own or lease the vehicle, excluding commercial owners/lessees which are owned or controlled by the vehicle manufacturer, using the procedures described in Appendix I to this subpart. See § 86.1838(c)(2)(i) for small volume manufacturer requirements.

(3) *Geographical limitations.* (i) Test groups certified to 50-state standards: For low altitude testing no more than fifty percent of the test vehicles may be procured from California. The test vehicles procured from the 49 state area must be procured from a location with a heating degree day 30 year annual average equal to or greater than 4000.

(ii) Test groups certified to 49 state standards: The test vehicles procured from the 49 state area must be procured from a location with a heating degree day 30 year annual average equal to or greater than 4000.

(iii) Vehicles procured for high altitude testing may be procured from any area located above 4000 feet.

(4) Vehicles may be rejected for procurement or testing under this section if they meet one or more of the rejection criteria in Appendix II to this subpart. Vehicles may also be rejected after testing under this section if they meet one or more of the rejection criteria in Appendix II to this subpart. Any vehicle rejected after testing must be replaced in order that the number of test vehicles in the sample comply with the sample size requirements of this section. Any post-test vehicle rejection and replacement procurement and testing must take place within the testing completion requirements of this section.

(e) *Testing facilities, procedures, quality assurance and quality control*—(1) *Lab equipment and procedural requirements.* The manufacturer shall utilize a test laboratory that is in accordance with the equipment and procedural requirements of subpart B of this part to conduct the testing required by this section.

(2) The manufacturer shall notify the Agency of the name and location of the testing laboratory(s) to be used to conduct testing of vehicles of each model year conducted pursuant to this section. Such notification shall occur at

least thirty working days prior to the initiation of testing of the vehicles of that model year.

(3) *Correlation*. The manufacturer shall document correlation traceable to the Environmental Protection Agency's National Vehicle and Fuel Emission Laboratory for its test laboratory utilized to conduct the testing required by this section.

(f)(1) A manufacturer may conduct in-use testing on a test group by measuring NMHC exhaust emissions rather than NMOG exhaust emissions. The measured NMHC exhaust emissions must be multiplied by the adjustment factor used for certification of the test group, or another adjustment factor acceptable to the Administrator, to determine the equivalent NMOG exhaust emission values for the test vehicle. The equivalent NMOG exhaust emission value must be used in place of the measured NMHC exhaust emission value in determining the exhaust NMOG results. The equivalent NMOG exhaust emission values must be compared to the NMOG exhaust emission standard from the emission bin to which the test group was certified.

(2) For flexible-fueled LDVs, LDTs and MDPVs certified to NMOG standards, the manufacturer may request from the Administrator the use of a methanol (M85) or ethanol (E85) NMOG exhaust emission to gasoline NMHC exhaust emission ratio which must be established during certification for each emission data vehicle for the applicable test group. The results must be submitted to the Administrator in the Part II application for certification. After approval by the Administrator, the measured gasoline NMHC exhaust emissions must be multiplied by the M85 or E85 NMOG to gasoline NMHC ratio submitted in the application for certification for the test group to determine the equivalent NMOG exhaust emission values for the test vehicle. The equivalent NMOG exhaust emission value must be used in place of the measured NMOG exhaust emission value in determining the exhaust NMOG results. The equivalent NMOG exhaust emission values must be compared to the NMOG exhaust emission standard from the vehicle emission standard bin to which the test group was certified.

(3) If the manufacturer measures NMOG it must also measure and report HCHO emissions. As an alternative to measuring the HCHO content, if the manufacturer measures NMHC as permitted in paragraph (f)(1) of this section, the Administrator may approve, upon submission of supporting data by a manufacturer, the use of HCHO to NMHC ratios. To request the use of HCHO to NMHC ratios, the manufacturer must establish during certification testing the ratio of measured HCHO exhaust emissions to measured NMHC exhaust emissions for each emission data vehicle for the applicable test group. The results must be submitted to the Administrator with the Part II application for certification. Following approval of the application for certification, the manufacturer may conduct in-use testing on the test group by measuring NMHC exhaust emissions rather than HCHO exhaust emissions. The measured NMHC exhaust emissions must be multiplied by the HCHO to NMHC ratio submitted in the application for certification for the test group to determine the equivalent HCHO exhaust emission values for the test vehicle. The equivalent HCHO exhaust emission values must be compared to the HCHO exhaust emission standard applicable to the test group.

[64 FR 23925, May 4, 1999, as amended at 65 FR 6865, Feb. 10, 2000; 65 FR 59977, Oct. 6, 2000; 66 FR 19310, Apr. 13, 2001; 70 FR 72929, Dec. 8, 2005]

§ 86.1846–01 Manufacturer in-use confirmatory testing requirements.

(a) *General requirements*. (1) A manufacturer of LDVs, LDTs and/or MDPVs must test, or cause testing to be conducted, under this section when the emission levels shown by a test group sample from testing under §§ 86.1845–01 or 86.1845–04, as applicable, exceeds the criteria specified in paragraph (b) of this section. The testing required under this section applies separately to each test group and at each test point (low and high mileage) that meets the specified criteria. The testing requirements apply separately for each model year starting with model year 2001. These provisions do not apply to

heavy-duty vehicles or engines prior to the 2007 model year.

(2) Except for vehicles certified under the NLEV provisions of subpart R of this part or unless otherwise approved by the Administrator, no emission measurements made under the requirements of this section may be adjusted by Reactivity Adjustment Factors (RAFs).

(3) For purposes of this section, the term vehicle includes light-duty vehicles, light-duty trucks and medium-duty passenger vehicles.

(4) Upon a manufacturer's written request, prior to in-use testing, that presents information to EPA regarding pre-conditioning procedures designed solely to remove the effects of high sulfur in gasoline from vehicles produced through the 2007 model year, EPA will consider allowing such procedures on a case-by-case basis. EPA's decision will apply to manufacturer in-use testing conducted under this section and to any in-use testing conducted by EPA. This provision does not apply to heavy-duty vehicles and engines.

(b) *Criteria for additional testing.* A manufacturer shall test a test group or a subset of a test group as described in paragraph (j) of this section when the results from testing conducted under §§ 86.1845–01 and 86.1845–04, as applicable, show mean emissions for that test group of any pollutant(s) to be equal to or greater than 1.30 times the applicable in-use standard and a failure rate, among the test group vehicles, for the corresponding pollutant(s) of fifty percent or greater.

(1) This requirement does not apply to Supplemental FTP testing conducted under § 86.1845–04(b)(5)(i) or evaporative/refueling testing conducted under § 86.1845–01 or § 86.1845–04. Testing conducted at high altitude under the requirements of §§ 86.1845–01 and 86.1845–04 will be included in determining if a test group meets the criteria triggering testing required under this section.

(2) The vehicle tested under the requirements of § 86.1845–01(c)(2) or § 86.1845–04(c)(2) with a minimum odometer miles of 75% of useful life will not be included in determining if a test group meets the triggering criteria.

(3) The SFTP composite emission levels shall include the IUVP FTP emissions, the IUVP US06 emissions, and the values from the SC03 Air Conditioning EDV certification test (without DFs applied). The calculations shall be made using the equations prescribed in § 86.164–01. If more than one set of certification SC03 data exists (due to running change testing or other reasons), the manufacturer shall choose the SC03 result to use in the calculation from among those data sets using good engineering judgment.

(c) *Useful life.* Vehicles tested under the provisions of this section must be within the useful life specified for the emission standards which were exceeded in the testing under § 86.1845–01 or § 86.1845–04, as applicable. Testing should be within the useful life specified, subject to sections 207(c)(5) and (c)(6) of the Clean Air Act where applicable.

(d) *Number of test vehicles.* A manufacturer must test a minimum of ten vehicles of the test group or Agency-designated subset. A manufacturer may, at the manufacturer's discretion, test more than ten vehicles under this paragraph for a specific test group or Agency-designated subset. If a manufacturer chooses to test more than the required ten vehicles, all testing must be completed within the time designated in the testing completion requirements of § 86.1846–01(g). Any vehicles which are eliminated from the sample either prior to or subsequent to testing, or any vehicles for which test results are determined to be void, must be replaced in order that the final sample of vehicles for which test results acceptable to the Agency are available equals a minimum of ten vehicles. A manufacturer may cease testing with a sample of five vehicles if the results of the first five vehicles tested show mean emissions for each pollutant to be less than 75.0 percent of the applicable standard, with no vehicles exceeding the applicable standard for any pollutant.

(e) *Emission testing.* Each test vehicle of a test group or Agency-designated subset shall be tested in accordance with the Federal Test Procedure and/or

the Supplemental Federal Test Procedure (whichever of these tests performed under § 86.1845–01 produces emission levels requiring testing under this section) as described in subpart B of this part, when such test vehicle is tested for compliance with applicable exhaust emission standards under this subpart.

(f) *Geographical limitations.* (1) Test groups or Agency-designated subsets certified to 50-state standards: For low altitude testing no more than 50 percent of the test vehicles may be procured from California. The test vehicles procured from the 49 state area must be procured from a location with a heating degree day 30 year annual average equal to or greater than 4000.

(2) Test groups or Agency-designated subsets certified to 49 state standards: For low-altitude testing all vehicles shall be procured from a location with a heating degree day 30 year annual average equal to or greater than 4000.

(3) Vehicles procured for high altitude testing may be procured from any area provided that the vehicle's primary area of operation was above 4000 feet.

(g) *Testing.* Testing required under this section must commence within three months of completion of the testing under § 86.1845–01 or § 86.1845–04 which triggered the confirmatory testing and must be completed within seven months of the completion of the testing which triggered the confirmatory testing. Any industry review of the results obtained under § 86.1845–01 or § 86.1845–04 and any additional vehicle procurement and/or testing which takes place under the provisions of § 86.1845–01 or § 86.1845–04 which the industry believes may affect the triggering of required confirmatory testing must take place within the three month period. The data and the manufacturers reasoning for reconsideration of the data must be provided to the Agency within the three month period.

(h) *Limit on manufacturer conducted testing.* For each manufacturer, the maximum number of test group(s) (or Agency-designated subset(s)) of each model year for which testing under this section shall be required is limited to 50 percent of the total number of test groups of each model year required to be tested by each manufacturer as prescribed in § 86.1845–01 or § 86.1845–04 rounded to the next highest whole number where appropriate. For each manufacturer with only one test group under § 86.1845–01 or § 86.1845–04, as applicable, such manufacturer shall have a maximum potential testing requirement under this section of one test group (or Agency-designated subset) per model year.

(i) Prior to beginning in-use confirmatory testing the manufacturer must, after consultation with the Agency, submit a written plan describing the details of the vehicle procurement, maintenance, and testing procedures (not otherwise specified by regulation) it intends to use.

(j) *Testing a subset.* EPA may designate a subset of the test group based on transmission type for testing under this section in lieu of testing the entire test group when the results for the entire test group from testing conducted under § 86.1845–01 or § 86.1845–04 show mean emissions and a failure rate which meet these criteria for additional testing.

[64 FR 23925, May 4, 1999, as amended at 65 FR 6866, Feb. 10, 2000; 65 FR 59977, Oct. 6, 2000; 66 FR 19310, Apr. 13, 2001]

§ 86.1847–01 Manufacturer in-use verification and in-use confirmatory testing; submittal of information and maintenance of records.

(a) The manufacturer who conducts or causes to be conducted testing of any motor vehicle under § 86.1845–01 shall establish, maintain and retain the following records organized and indexed by test group and evaporative/refueling family:

(1) A record documenting correlation as prescribed by § 86.1845–01(e)(3).

(2) A description of all laboratory equipment calibrations and verifications as prescribed by subpart B of this part or otherwise as appropriate using good engineering judgment.

(3) *Procurement documentation.* A description of the procurement area, a record of the source(s) of any list(s) of vehicles used as a basis for procurement, and a complete record of the number of vehicles rejected after positive vehicle owner response and reason(s) for manufacturer rejection of

each rejected vehicle. A complete record of the number of vehicle owners/lessees in which attempt to contact was made and the number of vehicle owners/lessees actually contacted, the number of owners/lessees not contacted and the reasons and number of each for failure to contact, and the number of owners contacted who declined to participate.

(4) All records required to be maintained under this paragraph shall be retained by the manufacturer for a period of eight (8) years after the end of production of the test group to which they relate.

(b) The manufacturer who conducts or causes to be conducted testing of any motor vehicle under § 86.1845–01 shall submit to the Administrator on a quarterly calendar year basis, with the information provided to the Administrator within 30 days of the end of the quarter of each calendar year, the following records organized by test group and evaporative/refueling family.

(1) A complete record of all emission tests performed, including tests results, the date of each test, and the phase mass values for fuel economy, carbon dioxide and each pollutant measured by the Federal Test Procedure and Supplemental Federal Test Procedure as prescribed by subpart B of this part.

(2) For each test vehicle within a test group, a record and description of procedures and test results pertaining to any inspection (including the information listed in Appendix III to this subpart), diagnostics, and maintenance performed on the test vehicle prior to testing in as-received condition.

(3) A record and description of any inspection, diagnostics, and maintenance performed and/or testing (including emission results) of any vehicle tested subsequent to its initial as-received test.

(c) The manufacturer who conducts or causes to be conducted testing of any motor vehicle under § 86.1845–01 shall submit to the Administrator a record of the name and location of the testing laboratory(s) to be used to conduct testing for each model year 30 working days prior to the initiation of testing of that model year.

(d) The manufacturer of any test vehicle subject to § 86.1845–01 shall report to the Agency the test results (identifying the vehicle test group and emission test results) of any test vehicle in which the test vehicle fails to meet any applicable emission standard. The manufacturer must make this report within 72 hours of the completion of the testing of the test vehicle.

(e) The manufacturer who conducts or causes to be conducted testing of any motor vehicle under § 86.1846–01 shall establish, maintain and retain the following organized and indexed records by test group or Agency-designated subset.

(1) A description of all laboratory equipment calibrations and verifications as prescribed by subpart B of this part or by good engineering judgment.

(2) Procurement documentation. A description of the procurement area, a record of the source(s) of any list(s) of vehicles used as a basis for procurement, a complete record of: the number of vehicle owners/lessees in which attempt to contact was made and the number of vehicle owners/lessees actually contacted; the number of owners/lessees not contacted and the reasons and number of each for failure to contact; the number of owners contacted who declined to participate; and a complete record of the number of vehicles rejected after positive vehicle owner response and reason(s) for manufacturer rejection of each rejected vehicle.

(3) All records required to be maintained under this paragraph shall be retained by the manufacturer for a period of eight (8) years after the end of production of the test group to which they relate.

(f) Within 30 working days of the completion of testing of a test group or Agency-designated subset performed under § 86.1846–01, the manufacturer shall submit to the Administrator the following records organized by test group or Agency-designated subset.

(1) A complete record of all emission tests performed, including tests results, the date of each test, and the phase mass values for fuel economy, carbon dioxide and each pollutant measured by the Federal Test Procedure and Supplemental Federal Test

Procedure as prescribed by subpart B of this part.

(2) For each test vehicle within a test group, a record and description of procedures and test results pertaining to any inspections, diagnostics, and maintenance performed on the test vehicle prior to any emission testing.

(3) A record and description of any inspections, diagnostics, maintenance performed and/or testing (including emission results) of any test vehicle tested subsequent to its initial emission test.

§ 86.1848–01 Certification.

(a)(1) If, after a review of the manufacturer's submitted Part I application, information obtained from any inspection, such other information as the Administrator may require, and any other pertinent data or information, the Administrator determines that the application is complete and that all vehicles within a test group as described in the application meet the requirements of this Part and the Clean Air Act, the Administrator shall issue a certificate of conformity.

(2) If, after review of the manufacturer's application, request for certification, information obtained from any inspection, such other information as the Administrator may require, and any other pertinent data or information, the Administrator determines that the application is not complete or the vehicles within a test group as described in the application, do not meet applicable requirements or standards of the Act or of this part, the Administrator may deny the issuance of, suspend, or revoke a previously issued certificate of conformity. The Administrator will notify the manufacturer in writing, setting forth the basis for the determination. The manufacturer may request a hearing on the Administrator's determination.

(b) A certificate of conformity will be issued by the Administrator for a period not to exceed one model year and upon such terms as deemed necessary or appropriate to assure that any new motor vehicle covered by the certificate will meet the requirements of the Act and of this part.

(c) All certificates are conditional upon the following conditions being met:

(1) The manufacturer must supply all required information according to the provisions of §§ 86.1843–01 and 86.1844–01.

(2) The manufacturer must comply with all certification and in-use emission standards contained in subparts S and H of this part both during and after model year production.

(3) The manufacturer must comply with all implementation schedules sales percentages as required in § 86.1810 or elsewhere in this part. Failure to meet a required implementation schedule sales percentage will be considered to be a failure to satisfy a condition upon which the certificate was issued and any vehicles or trucks sold in violation of the implementation schedule shall not be covered by the certificate.

(4) For incomplete light-duty trucks and incomplete heavy-duty vehicles, a certificate covers only those new motor vehicles which, when completed by having the primary load-carrying device or container attached, conform to the maximum curb weight and frontal area limitations described in the application for certification as required in § 86.1844–01.

(5) The manufacturer must meet the in-use testing and reporting requirements contained in §§ 86.1845–01, 86.1846–01, and 86.1847–01, as applicable. Failure to meet the in-use testing or reporting requirements shall be considered a failure to satisfy a condition upon which the certificate was issued. A vehicle or truck will be considered to be covered by the certificate only if the manufacturer fulfills this condition upon which the certificate was issued.

(6) Vehicles are covered by a certificate of conformity only if they are in all material respects as described in the manufacturer's application for certification (Part I and Part II).

(7) For Tier 2 and interim non-Tier 2 vehicles, all certificates of conformity issued are conditional upon compliance with all provisions of §§ 86.1811–04, 86.1860–04, 86.1861–04 and 86.1862–04 both during and after model year production.

(i) Failure to meet the fleet average NO_X requirements of 0.07g/mi, 0.30 g/mi

or 0.20 g/mi, as applicable, will be considered to be a failure to satisfy the terms and conditions upon which the certificate(s) was (were) issued and the vehicles sold in violation of the fleet average NO_X standard will not be covered by the certificate(s).

(ii) Failure to comply fully with the prohibition against selling credits that it has not generated or that are not available, as specified in § 86.1861–04, will be considered to be a failure to satisfy the terms and conditions upon which the certificate(s) was (were) issued and the vehicles sold in violation of this prohibition will not be covered by the certificate(s).

(iii) Failure to comply fully with the phase-in requirements of § 86.1811–04, will be considered to be a failure to satisfy the terms and conditions upon which the certificate(s) was (were) issued and the vehicles sold which do not comply with Tier 2 or interim non-Tier 2 requirements, up to the number needed to comply, will not be covered by the certificate(s).

(iv) For paragraphs (c)(7)(i) through (iii) of this section:

(A) The manufacturer must bear the burden of establishing to the satisfaction of the Administrator that the terms and conditions upon which the certificate(s) was (were) issued were satisfied.

(B) For recall and warranty purposes, vehicles not covered by a certificate of conformity will continue to be held to the standards stated or referenced in the certificate that otherwise would have applied to the vehicles.

(d) One certificate will be issued for each test group and evaporative/refueling family combination. For diesel fueled vehicles, one certificate will be issued for each test group. A certificate of conformity is deemed to cover the vehicles named in such certificate and produced during the model year.

(e) A manufacturer of new light-duty vehicles, light-duty trucks, and complete heavy-duty vehicles must obtain a certificate of conformity covering such vehicles from the Administrator prior to selling, offering for sale, introducing into commerce, delivering for introduction into commerce, or importing into the United States the new vehicle. Vehicles produced prior to the effective date of a certificate of conformity may also be covered by the certificate, once it is effective, if the following conditions are met:

(1) The vehicles conform in all respects to the vehicles described in the application for the certificate of conformity.

(2) The vehicles are not sold, offered for sale, introduced into commerce, or delivered for introduction into commerce prior to the effective date of the certificate of conformity.

(3) EPA is notified prior to the beginning of production when such production will start, and EPA is provided a full opportunity to inspect and/or test the vehicles during and after their production. EPA must have the opportunity to conduct SEA production line testing as if the vehicles had been produced after the effective date of the certificate.

(f) Vehicles imported by an original equipment manufacturer after December 31 of the calendar year for which the model year is named are still covered by the certificate of conformity as long as the production of the vehicle was completed before December 31 of that year.

(g) For test groups required to have an emission control diagnostic system, certification will not be granted if, for any emission data vehicle or other test vehicle approved by the Administrator in consultation with the manufacturer, the malfunction indicator light does not illuminate under any of the circumstances described in § 86.1806–01(k)(1) through (6).

(h) Vehicles equipped with aftertreatment technologies such as catalysts, otherwise covered by a certificate, which are driven outside the United States, Canada, and Mexico will be presumed to have been operated on leaded gasoline resulting in deactivation of such components as catalysts and oxygen sensors. If these vehicles are imported or offered for importation without retrofit of the catalyst or other aftertreatment technology, they will be considered not to be within the coverage of the certificate unless included in a catalyst or other aftertreatment technology control program operated by a manufacturer or a

United States Government agency and approved by the Administrator.

(i) For all light-duty vehicles and light light-duty trucks certified to NLEV standards under §§ 86.1710 through 86.1712, the following provisions apply:

(1) All certificates issued are conditional upon manufacturer compliance with all provisions of §§ 86.1710 through 86.1712 both during and after model year production.

(2) Failure to meet the requirements of § 86.1710(a) through (d) will be considered to be a failure to satisfy the conditions upon which the certificate(s) was issued and the vehicles sold in violation of the fleet average NMOG standard shall not be covered by the certificate.

(3) Failure to comply fully with the prohibition against a manufacturer selling credits that it has not generated or are not available, as specified in § 86.1710(e), will be considered to be a failure to satisfy the conditions upon which the certificate(s) was issued and the vehicles sold in violation of this prohibition shall not be covered by the certificate.

(4) Failure to comply fully with the prohibition against offering for sale Tier 1 vehicles and TLEVs in the Northeast Trading Region, as defined in § 86.1702, after model year 2000 if vehicles with the same test groups are not certified and offered for sale in California in the same model year, as specified in § 86.1711(a), will be considered to be a failure to satisfy the conditions upon which the certificate(s) was issued and the vehicles sold in violation of this prohibition shall not be covered by the certificate.

(5)(i) The Administrator will issue a National LEV certificate of conformity for 2000 model year vehicles or engines certified to comply with the California TLEV emission standards.

(ii) This certificate of conformity shall be granted after the Administrator has received and reviewed the California Executive Order a manufacturer has received for the same vehicles or engines.

(iii) Vehicles or engines receiving a certificate of conformity under the provisions in this paragraph can only be sold in the states included in the NTR, as defined in § 86.1702, and those states where the sale of California-certified vehicles is otherwise authorized.

(6) The manufacturer shall bear the burden of establishing to the satisfaction of the Administrator that the conditions upon which the certificate was issued were satisfied.

(7) For recall and warranty purposes, vehicles not covered by a certificate because of a violation of these conditions of the certificate will continue to be held to the standards stated in the certificate that would have otherwise applied to the vehicles.

[64 FR 23925, May 4, 1999, as amended at 65 FR 6866, Feb. 10, 2000; 65 FR 59977, Oct. 6, 2000]

§ 86.1849–01 Right of entry.

(a) Any manufacturer who has applied for certification of a new motor vehicle subject to testing under this subpart, or any manufacturer or entity who conducts or causes to be conducted in-use verification or in-use confirmatory testing under this subpart, shall admit or cause to be admitted any EPA Enforcement Officer or any EPA authorized representative during operating hours on presentation of credentials to any of the following:

(1) Any facility where any such certification or in-use verification or in-use confirmatory testing or any procedures or activities connected with such testing are or were performed.

(2) Any facility where any new motor vehicle or test vehicle used for certification, in-use verification or in-use confirmatory testing which is being, was, or is to be tested is present.

(3) Any facility where any construction process or assembly process used in the modification or build up of such a vehicle into a certification vehicle is taking place or has taken place.

(4) Any facility where any record or other document relating to § 86.1849–01(a) (1), (2), and/or (3) is located.

(b) Upon admission to any facility referred to in paragraph (a) of this section, any EPA official or EPA authorized representative shall be allowed:

(1) To inspect and monitor any part or aspect of such procedures, activities, and testing facilities, including, but

not limited to, monitoring vehicle preconditioning, emissions tests and mileage (or service) accumulation, bench aging, maintenance, and vehicle soak and storage procedures, and to verify correlation or calibration of test equipment.

(2) To inspect and make copies of any such records, designs, or other documents, including those records specified in §§ 86.1843–01, 86.1844–01, and 86.1847–01.

(c) In order to allow the Administrator to determine whether or not production motor vehicles conform to the conditions upon which a certificate of conformity has been issued, or conform in all material respects to the design specifications which applied to those vehicles described in the certification application for which a certificate of conformity has been issued to standards prescribed under section 202 of the Act, any manufacturer shall admit any EPA Enforcement Officer or EPA authorized representative on presentation of credentials to:

(1) Any facility where any document, design, or procedure relating to the translation of the design and construction of engines and emission-related components described in the compliance application or used for certification testing into production vehicles is located or carried on; and

(2) Any facility where any motor vehicles to be introduced into commerce are manufactured or assembled.

(d) Upon admission to any facility referred to in paragraph (c) of this section, any EPA Enforcement Officer or EPA authorized representative shall be allowed:

(1) To inspect and monitor any aspects of such manufacture or assembly and other procedures;

(2) To inspect and make copies of any such records, documents or designs; and

(3) To inspect and photograph any part or aspect of any such new motor vehicles and any component used in the assembly thereof that are reasonably related to the purpose of the entry.

(e) Any EPA official or EPA authorized representative shall be furnished by those in charge of a facility being inspected with such reasonable assistance as he may request to help him discharge any function set forth in this paragraph. Each applicant for or recipient of certification is required to cause those in charge of a facility operated for its benefit to furnish such reasonable assistance without charge to EPA whether or not the applicant controls the facility.

(f) The duty to admit or cause to be admitted any EPA Enforcement Officer or EPA authorized representative applies whether or not the applicant owns or controls the facility in question and applies both to domestic and to foreign manufacturers and facilities. EPA will not attempt to make any inspections which it has been informed that local law forbids. However, if local law makes it impossible to what is necessary to insure the accuracy of data generated at a facility, no informed judgment that a vehicle is certifiable or is covered by a certificate can properly be based on those data. It is the responsibility of the manufacturer to locate its testing and manufacturing facilities in jurisdictions where this situation will not arise.

(g) For purposes of this section:

(1) ''Presentation of credentials'' shall mean display of the document designating a person as an EPA Enforcement Officer or EPA authorized representative.

(2) Where vehicle, component, or engine storage areas or facilities are concerned, ''operating hours'' shall mean all times during which personnel other than custodial personnel are at work in the vicinity of the area or facility and have access to it.

(3) Where facilities or areas other than those covered by paragraph (g)(2) of this section are concerned, ''operating hours'' shall mean all times during which an assembly line is in operation or all times during which testing, maintenance, mileage (or service) accumulation, production or compilation of records, or any other procedure or activity related to certification testing, to translation of designs from the test stage to the production stage, or to vehicle (or engine) manufacture or assembly is being carried out in a facility.

(4) *Reasonable assistance* includes, but is not limited to, clerical, copying, interpretation and translation services, the making available upon request of personnel of the facility being inspected during their working hours to inform the EPA Enforcement Officer or EPA authorized representative of how the facility operates and to answer his questions, and the performance on request of emissions tests on any vehicle which is being, has been, or will be used for certification or in-use verification or confirmatory testing. Such tests shall be nondestructive, but may require appropriate mileage (or service) accumulation. A manufacturer may be compelled to cause the personal appearance of any employee at such a facility before an EPA Enforcement Officer or EPA authorized representative by written request for his appearance, signed by the Assistant Administrator for Air and Radiation or the Assistant Administrator for Enforcement and Compliance Assurance, served on the manufacturer. Any such employee who has been instructed by the manufacturer to appear will be entitled to be accompanied, represented, and advised by counsel.

§ 86.1850–01 Denial, suspension or revocation of certificate of conformity.

(a) If, after review of the manufacturer's application, request for certification, information obtained from any inspection, such other information as the Administrator may require, and any other pertinent data or information, the Administrator determines that one or more test vehicles do not meet applicable requirements or standards of the Act or of this Part, the Administrator will notify the manufacturer in writing, setting forth the basis for the determination. The manufacturer may request a hearing on the Administrator's determination.

(b) Notwithstanding the fact that the vehicles described in the application may comply with all other requirements of this subpart, the Administrator may deny issuance of, suspend, or revoke a previously issued certificate of conformity if the Administrator finds any one of the following infractions to be substantial:

(1) The manufacturer submits false or incomplete information.

(2) The manufacturer denies an EPA enforcement officer or EPA authorized representative the opportunity to conduct authorized inspections as required under § 86.1849–01.

(3) The manufacturer renders inaccurate any test data which it submits, or fails to make a good engineering judgment in accordance with § 86.1851–01(c)(1).

(4) The manufacturer denies an EPA enforcement officer or EPA authorized representative reasonable assistance as required in § 86.1849–01.

(5) The manufacturer fails to provide the records required in § 86.1844–01 to the Administrator within the deadline set forth in the request for such information.

(6) The manufacturer fails to comply with all conditions under which the certificate of conformity was granted as specified in 86.1848–01.

(7) The manufacturer otherwise circumvents the intent of the Act or of this Part.

(c) The manufacturer shall bear the burden of establishing to the satisfaction of the Administrator that the conditions upon which the certificate was issued were satisfied, or that any failure to satisfy a condition is not substantial.

(d) If a manufacturer knowingly commits an infraction specified in paragraphs (b)(1) through (b)(7) of this section, knowingly commits any fraudulent act which results in the issuance of a certificate of conformity, or fails to comply with the conditions specified in § 86.1843–01, the Administrator may deem such certificate void *ab initio*.

(e) When the Administrator denies, suspends, revokes, or voids ab initio a certificate, EPA will provide the manufacturer a written determination. The manufacturer may request a hearing under § 86.1853–01 on the Administrator's decision.

(f) Any suspension or revocation of a certificate of conformity shall extend no further than to forbid the introduction into commerce of vehicles previously covered by the certificate which are still in the possession of the manufacturer, except in cases of such

fraud or other misconduct that makes the certification void *ab initio*.

§ 86.1851–01 Application of good engineering judgment to manufacturers' decisions.

(a) The manufacturer shall exercise good engineering judgment in making all decisions called for under this subpart, including but not limited to selections, categorizations, determinations, and applications of the requirements of the subpart.

(b) Upon written request by the Administrator, the manufacturer shall provide within 15 working days (or such longer period as may be allowed by the Administrator) a written description of the engineering judgment in question.

(c) The Administrator may reject any such decision by a manufacturer if it is not based on good engineering judgment, or is otherwise inconsistent with the requirements of this subpart.

(d) If the Administrator rejects a decision by a manufacturer with respect to the exercise of good engineering judgment, the following provisions shall apply:

(1) If the Administrator determines that incorrect information was deliberately used in the decision process, that important information was deliberately overlooked, that the decision was not made in good faith, or that the decision was not made with a rational basis, the Administrator may suspend or void *ab initio* a certificate of conformity.

(2) If the Administrator determines that the manufacturer's decision does not meet the provisions of paragraph(d)(1) of this section, but that a different decision would reflect a better exercise of good engineering judgment, then the Administrator will notify the manufacturer of this concern and the basis thereof.

(i) The manufacturer shall have at least 30 days to respond to this notice. The Administrator may extend this response period upon request from the manufacturer if it is necessary to generate additional data for the manufacturer's response.

(ii) The Administrator shall make the final ruling after considering the information provided by the manufacturer during the response period. If the Administrator determines that the manufacturer's decision was not made using good engineering judgment, he/she may reject that decision and apply the new ruling to future corresponding decisions as soon as practicable.

(e) The Administrator shall notify the manufacturer in writing regarding any decision reached under paragraph (d)(1) or (2) of this section. The Administrator shall include in this notification the basis for reaching the determination.

(f) Within 30 working days following receipt of notification of the Administrator's determinations made under paragraph (d) of this section, the manufacturer may request a hearing on those determinations. The request shall be in writing, signed by an authorized representative of the manufacturer, and shall include a statement specifying the manufacturer's objections to the Administrator's determinations, and data or other analysis in support of such objections. If, after review of the request and supporting data or analysis, the Administrator finds that the request raises a substantial factual issue, he/she shall provide the manufacturer a hearing in accordance with § 86.1853–01 with respect to such issue.

§ 86.1852–01 Waivers for good in-use emission performance.

(a) The Administrator may waive requirements of this subpart relating to development of emission-related information or test data if the Administrator determines with confidence that the in-use emission test verification data required in § 86.1845–01 are below the applicable emission standards for an appropriate period of time, and that such performance is likely to continue in subsequent model years.

(b) Any waiver granted under paragraph (a) of this section will be granted only if the Administrator determines that the waived requirement is not needed to assure continued emission compliance and the Administrator will have sufficient testing and other information in order to make certification decisions.

(c) Any waiver granted under paragraph (a) of this section would be limited in duration to a period of one model year, unless extended by the Administrator as a result of continued demonstrations of good in-use emission performance.

(d) The Administrator reserves the right to deny or revoke a waiver which may have been granted if he/she determines that the manufacturer no longer qualifies for the waiver.

§ 86.1853–01 Certification hearings.

(a)(1) After granting a request for a hearing under this subpart, the Administrator shall designate a Presiding Officer for the hearing.

(2) The hearing shall be held as soon as practicable at a time and place fixed by the Administrator or by the Presiding Officer.

(3) In the case of any hearing requested pursuant to § 86.1850–01(e), the Administrator may in his discretion direct that all argument and presentation of evidence be concluded within such fixed period not less than 30 days as he may establish from the date that the first written offer of a hearing is made to the manufacturer. To expedite proceedings, the Administrator may direct that the decision of the Presiding Officer (who may, but need not be the Administrator) shall be the final EPA decision.

(b)(1) Upon appointment pursuant to paragraph (a) of this section, the Presiding Officer will establish a hearing file. The file shall consist of the notice issued by the Administrator together with any accompanying material, the request for a hearing and the supporting data submitted therewith, and all documents relating to the request for certification and all documents submitted therewith, and correspondence and other data material to the hearing.

(2) The hearing file will be available for inspection by the applicant at the office of the Presiding Officer.

(c) An applicant may appear in person, or may be represented by counsel or by any other duly authorized representative.

(d)(1) The Presiding Officer upon the request of any party, or in his discretion, may arrange for a prehearing conference at a time and place specified by him to consider the following:

(i) Simplification of the issues;

(ii) Stipulations, admissions of fact, and the introduction of documents;

(iii) Limitation of the number of expert witnesses;

(iv) Possibility of agreement disposing of all or any of the issues in dispute;

(v) Such other matters as may aid in the disposition of the hearing, including such additional tests as may be agreed upon by the parties.

(2) The results of the conference shall be reduced to writing by the Presiding Officer and made part of the record.

(e)(1) Hearings shall be conducted by the Presiding Officer in an informal but orderly and expeditious manner. The parties may offer oral or written evidence, subject to the exclusion by the Presiding Officer of irrelevant, immaterial and repetitious evidence.

(2) Witnesses will not be required to testify under oath. However, the Presiding Officer shall call to the attention of witnesses that their statements may be subject to the provisions of title 18 U.S.C. 1001 which imposes penalties for knowingly making false statements or representations, or using false documents in any matter within the jurisdiction of any department or agency of the United States.

(3) Any witness may be examined or cross-examined by the Presiding Officer, the parties, or their representatives.

(4) Hearings shall be reported verbatim. Copies of transcripts of proceedings may be purchased by the applicant from the reporter.

(5) All written statements, charts, tabulations, and similar data offered in evidence at the hearings shall, upon a showing satisfactory to the Presiding Officer of their authenticity, relevancy, and materiality, be received in evidence and shall constitute a part of the record.

(6) Oral argument may be permitted in the discretion of the Presiding Officer and shall be reported as part of the record unless otherwise ordered by the Presiding Officer.

(f)(1) The Presiding Officer shall make an initial decision which shall

include written findings and conclusions and the reasons or basis therefor on all the material issues of fact, law, or discretion presented on the record. The findings, conclusions, and written decision shall be provided to the parties and made a part of the record. The initial decision shall become the decision of the Administrator without further proceedings unless there is an appeal to the Administrator or motion for review by the Administrator within 20 days of the date the initial decision was filed.

(2) On appeal from or review of the initial decision the Administrator shall have all the powers which he would have in making the initial decision including the discretion to require or allow briefs, oral argument, the taking of additional evidence or the remanding to the Presiding Officer for additional proceedings. The decision by the Administrator shall include written findings and conclusions and the reasons or basis therefor on all the material issues of fact, law, or discretion presented on the appeal or considered in the review.

§§ 86.1854–86.1859 [Reserved]

§ 86.1860–04 How to comply with the Tier 2 and interim non-Tier 2 fleet average NO_X standards.

(a) The fleet average standards referred to in this section are the corporate fleet average standards for FTP exhaust NO_X emissions set forth in: § 86.1811–04(d) for Tier 2 LDV/Ts and MDPVs (0.07 g/mi); § 86.1811–04(l)(3) for interim non-Tier 2 LDV/LLDTs (0.30 g/mi); and, § 86.1811–04(l)(3) for interim non-Tier 2 HLDT/MDPVs (0.20 g/mi). Unless otherwise indicated in this section, the provisions of this section apply to all three corporate fleet average standards, except that the interim non-Tier 2 fleet average NO_X standards do not apply to a manufacturer whose U.S. LDV/T and MDPV sales are 100% Tier 2 LDV/Ts and MDPVs.

(b)(1) Each manufacturer must comply with the applicable fleet average NO_X standard, or standards, on a sales weighted average basis, at the end of each model year, using the procedure described in this section.

(2) During a phase-in year, the manufacturer must comply with the applicable fleet average NO_X standard for the required phase-in percentage for that year as specified in § 86.1811–04(k)(1), or for the alternate phase-in percentage as permitted under § 86.1811–04(k)(6).

(c)(1)(i) Each manufacturer must separately compute the sales weighted averages of the individual NO_X emission standards to which it certified all its Tier 2 vehicles, interim non-Tier 2 LDV/LLDTs, and interim non-Tier 2 HLDT/MDPVs of a given model year as described in § 86.1804(l)(2).

(ii) For model years up to and including 2008, manufacturers must compute separate NO_X fleet averages for Tier 2 LDV/LLDTs and Tier 2 HLDT/MDPVs.

(2)(i) For model years up to and including 2008, if a manufacturer certifies its entire U.S. sales of Tier 2 or interim non-Tier 2 LDV/LLDTs or interim non-Tier 2 HLDT/MDPVs, to full useful life bins having NO_X standards at or below the applicable fleet average NO_X standard, that manufacturer may elect not to compute a fleet average NO_X level for that category of vehicles. A manufacturer making such an election must not generate NO_X credits for that category of vehicles for that model year.

(ii) For model years after 2008, if a manufacturer certifies its entire U.S. sales of Tier 2 vehicles to full useful life bins having NO_X standards at or below 0.07 gpm, that manufacturer may elect not to compute a fleet average NO_X level for its Tier 2 vehicles. A manufacturer making such an election must not generate NO_X credits for that model year.

(d) The sales weighted NO_X fleet averages determined pursuant to paragraph (c) of this section must be compared with the applicable fleet average standard; 0.07 g/mi for NO_X for Tier 2 LDV/Ts and MDPVs, 0.30 g/mi for NO_X for interim non-Tier 2 LDV/LLDTs, and 0.20 g/mi for NOx for interim non-Tier 2 HLDT/MDPVs. Each manufacturer must comply on an annual basis with the fleet average standards by:

(1) Showing that its sales weighted average NO_X emissions of its LDV/LLDTs, HLDT/MDPVs or LDV/Ts, as applicable, are at or below the applicable fleet average standard; or

(2) If the sales weighted average is not at or below the applicable fleet average standard, by obtaining and applying sufficient Tier 2 NO_X credits, interim non-Tier 2 LDV/LLDT NO_X credits or interim non-Tier 2 HLDT/MDPV NO_X credits, as appropriate, and as permitted under § 86.1861–04.

(i) Manufacturers may not use NMOG credits generated under the NLEV program in subpart R of this part to meet any Tier 2 or interim non-Tier 2 NO_X fleet average standard.

(ii) Tier 2 NO_X credits may not be used to meet any fleet average interim non-Tier 2 NO_X standard except as permitted by § 86.1860–04(e)(1).

(iii) Interim non-Tier 2 NO_X credits may not be used to meet the Tier 2 fleet average NO_X standard.

(iv) Interim non-Tier 2 NO_X credits from HLDT/MDPVs may not be used to meet the fleet average NO_X standard for interim non-Tier 2 LDV/LLDTs, and interim non-Tier 2 credits from LDV/LLDTs may not be used to meet the fleet average NO_X standard for interim non-Tier 2 HLDT/MDPVs.

(e) (1) Manufacturers that cannot meet the requirements of paragraph (d) of this section, may carry forward a credit deficit for three model years, but must not carry such deficit into the fourth year. When applying credits to reduce or eliminate a deficit under the fleet average standard for interim LDV/LLDTs or interim HLDT/MDPVs, that has been carried forward into a year subsequent to its generation, a manufacturer may apply credits from Tier 2 LDV/LLDTs or Tier 2 HLDT/MDPVs, respectively, as well as from the appropriate group of interim vehicles. A manufacturer must not use interim credits to reduce or eliminate any NO_X credit deficit under the Tier 2 fleet average standard.

(2) A manufacturer carrying a credit deficit into the third year must generate or obtain credits to offset that deficit and apply them to the deficit at a rate of 1.2:1, (i.e. deficits carried into the third model year must be repaid with credits equal to 120 percent of the deficit).

(3) A manufacturer must not bank credits for future model years or trade credits to another manufacturer during a model year into which it has carried a deficit.

(f) *Computing fleet average NO_X* emissions. (1) Manufacturers must separately compute these fleet NO_X averages using the equation contained in paragraph (f)(2) of this section:

(i) Their Tier 2 LDV/LLDT and Tier 2 HLDT/MDPV fleet average NO_X emissions for each model year through 2008;

(ii) Their combined Tier 2 LDV/T and MDPV fleet average NO_X emissions for each model year after 2008;

(iii) Their interim non-Tier 2 LDV/LLDT fleet average NO_X emissions for each model year through 2006; and

(iv) Their interim non-Tier 2 HLDT/MDPV fleet average NO_X emissions for each model year through 2008.

(2) The equation for computing fleet average NO_X emissions is as follows:

$$\frac{\sum (N \times NO_X \text{ emission standard})}{\text{Total number of vehicles of the appropriate category (e.g., all LDV/Ts and MDPVs, or interim non-Tier 2 HLDT/MDPVs, etc.) sold including HEVs and ZEVs}}$$

Where:

N = The number of vehicles sold in the applicable category that were certified for each corresponding NO_X emission bin. N must be based on vehicles counted to the point of first sale.

Emission standard = The individual full useful life NO_X emission standard for each bin for which the manufacturer had sales.

(3) The results of the calculation in paragraph (f)(2) of this section must be rounded as required by § 86.1837–01.

(4) When approved in advance by the Administrator, the numerator in the equation in paragraph (f)(2) of this section may be adjusted downward by the product of the number of HEVs from each NO_X emission bin times a HEV

NO_X contribution factor determined through mathematical estimation of the reduction in NO_X emissions over the test procedure used to certify the HEVs. The reduction in NO_X emissions must be determined using good engineering judgement and reflect the relation in actual full useful life NO_X emissions to the full useful life NO_X standards for the certification bin applicable to the vehicles. The Administrator may require that calculation of the HEV NO_X contribution factor include vehicle parameters such as vehicle weight, portion of time during the test procedure that the HEV operates with zero exhaust emissions, zero emission range, NO_X emissions from fuel-fired heaters and NO_X emissions from electricity production and storage.

(g) *Additional credits for vehicles certified to 150,000 mile useful lives.* (1) A manufacturer may certify any test group to an optional useful life of 15 years or 150,000 miles, whichever occurs first.

(2)(i) For any test group certified to the optional 15 year/150,000 mile useful life, the manufacturer may generate additional NO_X credits, except as prohibited in paragraph (g)(3) of this section.

(ii) The manufacturer must calculate these extra NO_X credits, where permitted, by substituting an adjusted NO_X standard for the applicable NO_X standard from the full useful life certification bin when it calculates the applicable fleet average NO_X emissions by the procedure in paragraph (f) of this section. The adjusted standard must be equal to the applicable full useful life NO_X standard multiplied by 0.85 and rounded to one more decimal place than the number of decimal places as the applicable full useful life NO_X standard.

(3) A manufacturer electing not to comply with applicable intermediate life standards as permitted under § 86.1811–04(c)(4) may not generate additional credits from vehicles certified to a useful life of 15 years/150,000 miles; except that, for bins where such intermediate life standards do not exist or are specifically deemed to be optional in § 86.1811–04(c)(4), the manufacturer may generate additional NO_X credits from vehicles certified to a useful life of 15 years/150,000 miles.

(h) *Additional credits for vehicles certified to low bins.* A manufacturer may obtain additional NO_X credits by certifying vehicles to bins 1 and/or 2 in model years from 2001 through 2005 subject to the following requirements:

(1) When computing the fleet average Tier 2 NO_X emissions using the formula in paragraph (f)(2) of this section, the manufacturer may multiply the number of vehicles certified to bins 1 and 2 by the applicable multiplier shown in Table S04–11 when computing the denominator in the formula. These multipliers may not be used after model year 2005. The table follows:

TABLE S04–11—MULTIPLIERS FOR ADDITIONAL TIER 2 NO_X CREDITS FOR BIN 1 AND 2 LDV/TS

Bin	Model year	Multiplier 73
2	2001, 2002, 2003, 2004, 2005	1.5
1	2001, 2002, 2003, 2004, 2005	2.0

(2) Optionally, instead of the process described in paragraph (h)(1) of this section, when computing Tier 2 NO_X credits using the formula in § 86.1861–04(b)(1), the manufacturer may multiply the number of vehicles certified to bin 1 and bin 2 by the applicable multiplier shown in Table S04–11 in paragraph (h)(1) of this section when computing the ''Total number of Tier 2 Vehicles Sold, Including ZEVs and HEVs''. These multipliers may not be used after model year 2005.

[65 FR 6866, Feb. 10, 2000, as amended at 66 FR 19310, Apr. 13, 2001]

§ 86.1861–04 How do the Tier 2 and interim non-Tier 2 NO_X averaging, banking and trading programs work?

(a) *General provisions for Tier 2 credits and debits.* (1) A manufacturer whose Tier 2 fleet average NO_X emissions exceeds the 0.07 g/mile standard must complete the calculation at paragraph (b) of this section to determine the size of its NO_X credit deficit. A manufacturer whose Tier 2 fleet average NO_X emissions is less than or equal to the 0.07 g/mile standard must complete the

calculation in paragraph (b) of this section if it desires to generate NO_X credits. In either case, the number of credits or debits determined in the calculation at paragraph (b) of this section must be rounded to the nearest whole number.

(2) Credits generated according to the calculation in paragraph (b)(1) of this section may be banked for future use or traded to another manufacturer.

(3) NO_X credits are not subject to any discount or expiration date except as required under the deficit carryforward provisions of § 86.1860–04(e)(2).

(4) If a manufacturer calculates that it has negative credits (debits or a credit deficit) for a given model year, it must obtain sufficient credits, as required under § 86.1860–04(e)(2), from vehicles produced by itself or another manufacturer in a model year no later than the third model year following the model year for which it calculated the credit deficit. (Example: if a manufacturer calculates that it has a NO_X credit deficit for the 2008 model year, it must obtain sufficient NO_X credits to offset that deficit from its own production or that of other manufacturers' 2011 or earlier model year vehicles.)

(6)(i) Manufacturers may not use NO_X credits to comply with the NLEV requirements of subpart R of this part.

(ii) Manufacturers may not use NMOG credits generated by vehicles certified to the NLEV requirements of subpart R of this part to comply with any NO_X requirements of this subpart.

(iii) Manufacturers may not use NO_X credits generated by interim non-Tier 2 vehicles to comply with the fleet average NO_X standard for Tier 2 vehicles.

(iv) Manufacturers may not use NO_X credits generated by Tier 2 vehicles to comply with any fleet average NO_X standard for interim non-Tier 2 vehicles, except as permitted under § 86.1860–04(e).

(v) Manufacturers may not use NO_X credits generated by interim non-Tier 2 LDV/LLDTs to comply with the fleet average NO_X standard for interim non-Tier 2 HLDT/MDPVs.

(vi) Manufacturers may not use NO_X credits generated by interim non-Tier 2 HLDT/MDPVs to comply with the fleet average NO_X standard for interim non-Tier 2 LDV/LLDTs.

(vii) Manufacturers may not use NO_X credits generated by Tier 2 LDV/LLDTs to comply with the Tier 2 NO_X average standard for HLDT/MDPVs before the 2009 model year.

(viii) Manufacturers may not use NO_X credits generated by Tier 2 HLDT/MDPVs to comply with the Tier 2 NO_X average standard for LDV/LLDTs before the 2009 model year.

(7) Manufacturers may bank Tier 2 NO_X credits for later use to meet the Tier 2 fleet average NO_X standard or trade them to another manufacturer. Credits are earned on the last day of the model year. Before trading or carrying over credits to the next model year, a manufacturer must apply available credits to offset any credit deficit, where the deadline to offset that credit deficit has not yet passed.

(8) There are no property rights associated with NO_X credits generated under this subpart. Credits are a limited authorization to emit the designated amount of emissions. Nothing in this Part or any other provision of law should be construed to limit EPA's authority to terminate or limit this authorization through a rulemaking.

(b) *Calculating Tier 2 credits and debits.* (1) Manufacturers that achieve fleet average NO_X values from the calculation in § 86.1860–04(f), lower than the applicable fleet average NO_X standard, may generate credits for a given model year, in units of vehicle-g/mi NO_X, determined in this equation:

[(Fleet Average NO_X Standard) − (Manufacturer's Fleet Average NO_X Value)] × (Total Number of Tier 2 Vehicles Sold, Including ZEVs and HEVs).

Where: The number of Tier 2 vehicles sold is based on the point of first sale and does not include vehicles sold in California or a state that adopts, and has in effect for that model year, California emission requirements.

(2) Where the result of the calculation in paragraph (b)(1) of this section is a negative number, the manufacturer must generate negative NO_X credits (debits).

(c) *Early banking.* (1)(i) Manufacturers may certify LDV/LLDTs to the Tier 2 FTP exhaust standards in § 86.1811–04 for model years 2001–2003 in order to

bank credits for use in the 2004 and later model years. Such vehicles must also meet SFTP exhaust emission standards specified in § 86.1811–04.

(ii) Manufacturers may certify HLDT/MDPVs to the Tier 2 FTP exhaust standards in § 86.1811–04 for model years 2001–2007 in order to bank credits for use in the 2008 and later model years. Such vehicles must also meet applicable SFTP exhaust emission standards specified in § 86.1811–04.

(iii) This process is referred to as ''early banking'' and the resultant credits are referred to as ''early credits''. In order to bank early credits, a manufacturer must comply with all exhaust emission standards and requirements applicable to Tier 2 LDV/LLDTs and/or HLDT/MDPVs, as applicable, except as allowed under paragraph (c)(4) of this section.

(2) To generate early credits, a manufacturer must separately compute the sales weighted NO_X average of the LDV/LLDTs and HLDT/MDPVs it certifies to the Tier 2 exhaust requirements and separately compute credits using the calculations in this section and in § 86.1860–04.

(3) Early HLDT/MDPV credits may not be applied to LDV/LLDTs before the 2009 model year. Early LDV/LLDT credits may not be applied to HLDT/MDPVs before the 2009 model year.

(4) Manufacturers may generate early Tier 2 credits from LDVs, LDT1s and LDT2s that are certified to a full useful life of 100,000 miles, provided that the credits are prorated by a multiplicative factor of 0.833 (the quotient of 100,000/120,000). Where a manufacturer has both 100,000 and 120,000 mile full useful life vehicles for which it desires to bank early credits, it must compute the credits from each group of vehicles separately and then add them together.

(5) Manufacturers may bank early credits for later use to meet the Tier 2 fleet average NO_X standard or trade them to another manufacturer subject to the restriction in paragraph (c)(3) of this section.

(6) Early credits must not be used to comply with the fleet average NO_X standards for interim non-Tier 2 vehicles.

(7) Nothing in this section prevents the use of the NMOG values of 2003 and earlier model year LDV/LLDTs from being used in calculations of the NMOG fleet average and subsequent NMOG credit generation, under subpart R of this part.

(d) *Reporting and recordkeeping for Tier 2 NO_X credits including early credits.* Each manufacturer must comply with the reporting and recordkeeping requirements of § 86.1862–04.

(e) *Fleet average NO_X debits.* (1) Manufacturers must offset any debits for a given model year by the fleet average NO_X reporting deadline for the third model year following the model year in which the debits were generated as required in § 86.1860.04(e)(2). Manufacturers may offset debits by generating credits or acquiring credits generated by another manufacturer.

(2)(i) Failure to meet the requirements of paragraphs (a) through (d) of this section and of this paragraph (e), within the required timeframe for offsetting debits will be considered to be a failure to satisfy the conditions upon which the certificate(s) was issued and the individual noncomplying vehicles not covered by the certificate must be determined according to this section.

(ii) If debits are not offset within the specified time period, the number of vehicles not meeting the fleet average NO_X standards and not covered by the certificate must be calculated by dividing the total amount of debits for the model year by the fleet average NO_X standard applicable for the model year in which the debits were first incurred.

(iii) EPA will determine the vehicles for which the condition on the certificate was not satisfied by designating vehicles in those test groups with the highest certification NO_X emission values first and continuing until a number of vehicles equal to the calculated number of noncomplying vehicles as determined above is reached. If this calculation determines that only a portion of vehicles in a test group contribute to the debit situation, then EPA will designate actual vehicles in that test group as not covered by the certificate, starting with the last vehicle produced and counting backwards.

(3) If a manufacturer ceases production of LDV/Ts and MDPVs or is purchased by, merges with or otherwise combines with another manufacturer,

the manufacturer continues to be responsible for offsetting any debits outstanding within the required time period. Any failure to offset the debits will be considered to be a violation of paragraph (e)(1) of this section and may subject the manufacturer to an enforcement action for sale of vehicles not covered by a certificate, pursuant to paragraph (e)(2) of this section.

(4) For purposes of calculating the statute of limitations, a violation of the requirements of paragraph (e)(1) of this section, a failure to satisfy the conditions upon which a certificate(s) was issued and hence a sale of vehicles not covered by the certificate, all occur upon the expiration of the deadline for offsetting debits specified in paragraph (e)(1) of this section.

(f) *NO_X credit transfers.* (1) EPA may reject NO_X credit transfers if the involved manufacturers fail to submit the credit transfer notification in the annual report.

(2) A manufacturer may not sell credits that are not available for sale pursuant to the provisions in paragraphs (a)(2) and (a)(7) of this section.

(3) In the event of a negative credit balance resulting from a transaction, both the buyer and seller are liable, except in cases involving fraud. EPA may void *ab initio* the certificates of conformity of all engine families participating in such a trade.

(4)(i) If a manufacturer transfers a credit that it has not generated pursuant to paragraph (b) of this section or acquired from another party, the manufacturer will be considered to have generated a debit in the model year that the manufacturer transferred the credit. The manufacturer must offset such debits by the deadline for the annual report for that same model year.

(ii) Failure to offset the debits within the required time period will be considered a failure to satisfy the conditions upon which the certificate(s) was issued and will be addressed pursuant to paragraph (e) of this section.

(g) *Interim non-Tier 2 NO_X credits and debits; Interim non-Tier 2 averaging, banking and trading.* Interim non-Tier 2 NO_X credits must be generated, calculated, tracked, averaged, banked, traded, accounted for and reported upon separately from Tier 2 credits. The provisions of this section applicable to Tier 2 NO_X credits and debits and Tier 2 averaging banking and trading are applicable to interim non-Tier 2 LDV/LLDTs and interim non-Tier 2 HLDT/MDPVs with the following exceptions:

(1) Provisions for early banking under paragraph (c) of this section do not apply.

(2) The fleet average NO_X standard used for calculating credits is 0.30 grams per mile for interim non-Tier 2 LDV/LLDTs and 0.20 g/mi for interim non-Tier 2 HLDT/MDPVs. (The interim non-Tier 2 NO_X standard of 0.30 (or 0.20) g/mi replaces 0.07 in the text and calculation in this section.)

(3) Interim non-Tier 2 NO_X credit deficits may be carried forward for three years subject to the requirements of § 86.1860–04(e).

[65 FR 6868, Feb. 10, 2000, as amended at 66 FR 19311, Apr. 13, 2001]

§ 86.1862–04 Maintenance of records and submittal of information relevant to compliance with fleet average NO_X standards.

(a) *Maintenance of records.* (1) The manufacturer producing any light-duty vehicles and/or light-duty trucks subject to the provisions in this subpart must establish, maintain, and retain the following information in adequately organized and indexed records for each model year:

(i) Model year;

(ii) Applicable fleet average NO_X standard: 0.07g/mi for Tier 2 LDV/Ts; 0.30 g/mi for interim non-Tier 2 LDV/LLDTs; or 0.20 g/mi for interim non-Tier 2 HLDT/MDPVs;

(iii) Fleet average NO_X value achieved; and

(iv) All values used in calculating the fleet average NO_X value achieved.

(2) The manufacturer producing any LDV/Ts or MDPVs subject to the provisions in this subpart must establish, maintain, and retain the following information in adequately organized and indexed records for each LDV/T or MDPV subject to this subpart:

(i) Model year;

(ii) Applicable fleet average NO_X standard;

(iii) EPA test group;

(iv) Assembly plant;

(v) Vehicle identification number;

(vi) NO_X standard to which the LDV/T or MDPV is certified; and

(vii) Information on the point of first sale, including the purchaser, city, and state.

(3) The manufacturer must retain all records required to be maintained under this section for a period of eight years from the due date for the annual report. Records may be retained as hard copy or reduced to microfilm, ADP diskettes, and so forth, depending on the manufacturer's record retention procedure; provided, that in every case all information contained in the hard copy is retained.

(4) Nothing in this section limits the Administrator's discretion to require the manufacturer to retain additional records or submit information not specifically required by this section.

(5) Pursuant to a request made by the Administrator, the manufacturer must submit to the Administrator the information that the manufacturer is required to retain.

(6) EPA may void *ab initio* a certificate of conformity for a vehicle certified to emission standards as set forth or otherwise referenced in this subpart for which the manufacturer fails to retain the records required in this section or to provide such information to the Administrator upon request.

(b) *Reporting*. (1) Each covered manufacturer must submit an annual report. Except as provided in paragraph (b)(2) of this section, the annual report must contain, for each applicable fleet average NO_X standard, the fleet average NO_X value achieved, all values required to calculate the NO_X value, the number of credits generated or debits incurred, and all the values required to calculate the credits or debits. The annual report must contain the resulting balance of credits or debits.

(2) When a manufacturer calculates compliance with the fleet average NO_X standard using the provisions in § 86.1860–04(c)(2), then the annual report must state that the manufacturer has elected to use such provision and must contain the fleet average NO_X standard as the fleet average NO_X value for that model year.

(3) For each applicable fleet average NO_X standard, the annual report must also include documentation on all credit transactions the manufacturer has engaged in since those included in the last report. Information for each transaction must include:

(i) Name of credit provider;

(ii) Name of credit recipient;

(iii) Date the transfer occurred;

(iv) Quantity of credits transferred; and

(v) Model year in which the credits were earned.

(4) Unless a manufacturer reports the data required by this section in the annual production report required under § 86.1844–01(e) and subsequent model year provisions, a manufacturer must submit an annual report for each model year after production ends for all affected vehicles and trucks produced by the manufacturer subject to the provisions of this subpart and no later than May 1 of the calendar year following the given model year. Annual reports must be submitted to: Director, Vehicle Programs and Compliance Division, U.S. Environmental Protection Agency, 2000 Traverwood, Ann Arbor, Michigan 48105.

(5) Failure by a manufacturer to submit the annual report in the specified time period for all vehicles and trucks subject to the provisions in this section is a violation of section 203(a)(1) of the Clean Air Act for each subject vehicle and truck produced by that manufacturer.

(6) If EPA or the manufacturer determines that a reporting error occurred on an annual report previously submitted to EPA, the manufacturer's credit or debit calculations will be recalculated. EPA may void erroneous credits, unless transferred, and must adjust erroneous debits. In the case of transferred erroneous credits, EPA must adjust the selling manufacturer's credit or debit balance to reflect the sale of such credits and any resulting generation of debits.

(c) *Notice of opportunity for hearing*. Any voiding of the certificate under paragraph (a)(6) of this section will be made only after EPA has offered the

manufacturer concerned an opportunity for a hearing conducted in accordance with § 86.614 for light-duty vehicles or § 86.1014 for light-duty trucks and, if a manufacturer requests such a hearing, will be made only after an initial decision by the Presiding Officer.

[65 FR 6869, Feb. 10, 2000]

§ 86.1863–07 Optional chassis certification for diesel vehicles.

(a) A manufacturer may optionally certify heavy-duty diesel vehicles weighing 14,000 pounds GVWR or less, to the standards specified in § 86.1816–08. Such vehicles must meet all requirements of Subpart S of this part that are applicable to Otto-cycle vehicles, except for evaporative, refueling, and OBD requirements where the diesel specific OBD requirements would apply.

(b) For OBD, diesel vehicles optionally certified under this section are subject to the OBD requirements of § 86.1806–05.

(c) Diesel vehicles optionally certified under this section may be tested using the test fuels, sampling systems, or analytical systems specified for diesel engines in Subpart N of this part.

(d) Diesel vehicles optionally certified under this section may not be included in any averaging, banking, or trading program.

(e) The provisions of § 86.004–40 apply to the engines in vehicles certified under this section.

(f) Diesel vehicles may be certified under this section to the standards applicable to model year 2008 prior to model year 2008.

(g) Diesel vehicles optionally certified under this section in model years 2007, 2008, or 2009 shall be included in phase-in calculations specified in § 86.007–11(g).

[66 FR 5193, Jan. 18, 2001, as amended at 68 FR 35801, June 17, 2003]

APPENDIX I TO SUBPART S OF PART 86—VEHICLE PROCUREMENT METHODOLOGY

I. *Test Sampling:* The master owner list will be obtained from manufacturer records or owner registration lists. The list shall include all vehicle configurations of the target reality check test group within the selected mailing area. The mailing area shall be within a radius of at least 20 miles from the test site.

II. *Selection Guidelines:* The manufacturer or their representative shall make a reasonable effort to contact potential participants. Solicitation letters will be sent to potential participants in the order of their appearance on a randomized master owner list. The manufacturer or their representative shall perform the following steps:

(a) The manufacturer or their representative shall mail solicitation letters in batches. The size of each batch is at least five times the required number of vehicles to be tested for the group that year. First class mail shall be used.

(b) If the response rate is less than 20% after two to four weeks, the manufacturer or their representative shall make one more attempt and send a new solicitation package to the potential participants who have not yet responded.

(c) A telephone questionnaire will be conducted on a random selection of returned, positive-response postcards.

(d) If the required number of vehicles is not obtained, additional solicitation letters shall be sent to the next batch of potential participants in the order of their appearance on a randomized master owner list until the required number of vehicles are procured.

(e) Alternative selection methods may be used with advanced approval from the Administrator.

III. *Vehicles Not Available:* Vehicles may not be available or will not be pursued for procurement for the following reasons:

(a) The potential participant response indicates ''not willing to participate.''

(b) The customer has moved out of the area.

(c) The solicitation letter is undeliverable.

(d) The customer did not respond after two attempts.

(e) The vehicle is not in the appropriate mileage or age category.

APPENDIX II TO SUBPART S OF PART 86—AS-RECEIVED TESTING VEHICLE REJECTION CRITERIA

1. The odometer is inoperative, has been replaced, or the indicated mileage is outside the target range.

2. The emission system of the vehicle has been obviously tampered or the vehicle has been operated on leaded fuel. A manufacturer may request a vehicle be rejected because of the addition of an aftermarket security system if the manufacturer establishes that the installation would make that vehicle's emissions unrepresentative.

3. The vehicle has been used for severe duty (trailer towing for passenger cars, snow plowing, racing)

4. The vehicle has a history of extensive collision damage or major engine repair (piston, crank, cylinder head, engine block).
5. The vehicle exhibits ominous noises or serious fluid leaks from the engine or transmission, a modified exhaust system, (headers, side pipes, aftermarket catalysts, etc) or an exhaust system with an audible leak.
6. Testing the vehicle could endanger the safety of the vehicle, test facility, or individuals conducting the testing.
7. The MIL light is flashing (severe misfire indication).
8. Other items with prior agency approval.

APPENDIX III TO SUBPART S OF PART 86—AS-RECEIVED INSPECTION

Items to be recorded at time of Initial Inspection of Vehicle—

1. Date of Inspection
3. Test Group
4. Evaporative/refueling Family
5. Vehicle model
6. Odometer Reading
7. Build Date
8. MIL light on/off status
9. Readiness code status
10. Stored OBD codes
11. Any conditions referenced in Appendix II to this subpart which result in vehicle being rejected from program.

Subpart T—Manufacturer-Run In-Use Testing Program for Heavy-Duty Diesel Engines

SOURCE: 70 FR 34619, June 14, 2005, unless otherwise noted.

§ 86.1901 What testing requirements apply to my engines that have gone into service?

(a) If you manufacture diesel heavy-duty engines above 8500 lbs. GVWR that are subject to engine-based exhaust emission standards under this part, you must test them as described in this subpart. You must measure all emissions listed in § 86.1910(d) other than PM beginning in calendar year 2005 and you must measure PM emissions beginning in calendar year 2006. See §§ 86.1930 and 86.1935 for special provisions that may apply to manufacturers in the early years of this program.

(b) We may void your certificate of conformity for an engine family if you do not meet your obligations under this subpart. We may also void individual tests and require you to retest those vehicles or take other appropriate measures in instances where you have not performed the testing in accordance with the requirements described in this subpart.

(c) In this subpart, the term ''you'' refers to the certificate-holder for any engines subject to the requirements of this subpart.

(d) In this subpart, *round* means to round numbers according to NIST Special Publication 811(incorporated by reference in § 86.1).

§ 86.1905 How does this program work?

(a) You must test in-use engines from the families we select. We may select the following number of engine families for testing, except as specified in paragraph (b) of this section:

(1) We may select up to 25 percent of your engine families in any calendar year, calculated by dividing the number of engine families you certified in the model year corresponding to the calendar year by four and rounding to the nearest whole number. We will consider only engine families with annual U.S.-directed production volumes above 1,500 units in calculating the number of engine families subject to testing each calendar year under the annual 25 percent engine family limit. In addition, for model year 2007 through 2009, identical engine families that are split into two subfamilies under § 86.007–15(m)(9) will count as only one engine family. If you have only three or fewer families that each exceed an annual U.S.-directed production volume of 1,500 units, or if you have no engine families above this limit, we may select one engine family per calendar year for testing.

(2) Over any four-year period, we will not select more than the average number of engine families that you have certified over that four-year period (the model year when the selection is made and the preceding three model years), based on rounding the average value to the nearest whole number.

(b) If there is clear evidence of a nonconformity with regard to an engine family, we may select that engine family without counting it as a selected engine family under paragraph (a) of this section. We will consult with you in reaching a conclusion whether clear

evidence of a nonconformity exists for any engine family. In general, there is clear evidence of a nonconformity regarding an engine family under this subpart in any of the following cases:

(1) The engine family was not remedied but is a carry-over from an engine family you tested under this subpart and was subsequently remedied based at least in part on the Phase 1 or Phase 2 testing outcomes described in § 86.1915.

(2) The engine family was not remedied but is a carry-over from an engine family that was remedied based on an EPA in-use testing program.

(c) We may select any individual engine family for testing, regardless of its production volume, as long as we do not select more than the number of engine families described in paragraph (a) of this section. We may select an engine family from the current model year or any previous model year, except that we will not select any engine families from model years before 2007 beginning in the following calendar years:

(1) 2007 for all emissions testing other than PM testing.

(2) 2008 for PM testing.

(d) You must complete all the required testing and reporting under this subpart within 18 months after we direct you to test a particular engine family. We will typically select engine families for testing and notify you in writing by June 30 of the applicable calendar year. You may ask for up to six months longer to complete Phase 2 testing if there is a reasonable basis for needing more time. In very unusual circumstances you may request an additional six months to complete Phase 2 testing.

(e) If you make a good-faith effort to access enough test vehicles to complete Phase 1 or Phase 2 testing requirements under this subpart for an engine family, but are unable to do so, you must ask us either to modify the testing requirements for the selected engine family or, in the case of Phase 1 testing, to select a different engine family.

(f) After you complete the in-use testing requirements for an engine family that we selected for testing in a given calendar year, we may select that same family in a later year to evaluate the engine family's compliance closer to the end of its useful life. This would count as an additional engine-family selection under paragraph (a) of this section, except as described in paragraph (b) of this section.

(g) For any communication related to this subpart, contact the Engine Programs Group Manager (6405-J), U.S. Environmental Protection Agency, 1200 Pennsylvania Ave., NW., Washington, DC 20460.

§ 86.1908 How must I select and screen my in-use engines?

(a) Once we direct you to do testing under this subpart, you must make arrangements to select test vehicles and engines that meet the following criteria:

(1) The engines must be representative of the engine family.

(2) The usage of the vehicles must be representative of typical usage for the vehicles' particular application.

(3) The vehicles come from at least two independent sources.

(4) The key vehicle/engine systems (*e.g.*, power train, drive train, emission control) have been properly maintained and used.

(5) The engines have not been tampered with, rebuilt or undergone major repair that could be expected to affect emissions.

(6) The engines have not been misfueled. For example, an engine may be considered misfueled if operated on a biodiesel fuel blend that is either not listed as allowed or otherwise indicated to be an unacceptable fuel in the vehicle's owner or operator manual.

(7) The engines do not have an illuminated MIL or stored OBD trouble code that lead you to reject the vehicle from the test program as described in § 86.1910(b)(2).

(8) The vehicles are likely to operate for at least three hours (excluding idle) over a complete shift-day, as described in § 86.1910(g).

(9) The vehicles have not exceeded the applicable useful life, in miles or years (see subpart A of this part); you may otherwise not exclude engines from testing based on their age or mileage.

(10) The vehicle has appropriate space for safe and proper mounting of the PEMS equipment.

(b) You must keep any records of a vehicle's maintenance and use history you obtain from the owner or operator, as required by § 86.1925. You must report the engine's maintenance and use history and information related to the OBD system, as described in § 86.1920.

(c) You must notify us before rejecting a candidate vehicle for reasons other than failing to meet the acceptance criteria in paragraph (a) of this section. A candidate vehicle is any prospective vehicle you have identified to potentially fulfill your testing requirements under this subpart. Include your reasons for rejecting each vehicle. If an owner declines to participate in the test program, you may reject the vehicle without prior notification. Such a rejection must be reported as described in § 86.1920. We may allow you to replace the rejected vehicle with another candidate vehicle to meet your testing requirements for the specific engine family.

(d) You must report when, how, and why you reject candidate vehicles, as described in § 86.1920.

§ 86.1910 How must I prepare and test my in-use engines?

(a) You must limit maintenance to what is in the owners manual for engines with that amount of service and age. For anything we consider an adjustable parameter (*see* § 86.094–21(b)(1)(ii) and § 86.094–22(e)), you may adjust that parameter only if it is outside of its adjustable range. You must then set the adjustable parameter to the mid-point of its adjustable range or your recommended setting, unless we approve your request to do otherwise. You must receive permission from us before adjusting anything not considered to be an adjustable parameter. You must keep records of all maintenance and adjustments, as required by § 86.1925. You must send us these records, as described in § 86.1920(b)(3)(x), unless we instruct you not to send them.

(b) You may treat a vehicle with an illuminated MIL or stored trouble code as follows:

(1) If the length of MIL illumination or trouble code storage is consistent with proper maintenance and use, either test the prospective test vehicle as received or repair the vehicle before testing. If you elect to repair the vehicle/engine, but ultimately determine that repairs cannot be completed in a timely manner, you may reject the vehicle from the test program and replace it with another vehicle. If you repair or reject the vehicle, you must describe the MIL or trouble code information in your report under § 86.1920.

(2) If the length of MIL illumination or trouble code storage is inconsistent with proper maintenance and use, either test the prospective test vehicle as received, repair the vehicle before testing, or reject the vehicle from the test program and replace it with another vehicle. If you repair or reject the vehicle, you must describe the MIL or trouble code information in your report under § 86.1920.

(3) If a MIL is illuminated or a trouble code is set during an in-use test, do one of the following:

(i) Stop the test, repair the vehicle, and restart the testing. In this case, only the portion of the full test results without the MIL illuminated or trouble code set would be used in the vehicle-pass determination as described in § 86.1912. Describe the MIL or trouble code information in your report under § 86.1920.

(ii) Stop the test, repair the vehicle, and initiate a new test. In this case, only the post-repair test results would be used in the vehicle-pass determination as described in § 86.1912. Describe the MIL or trouble code information in your report under § 86.1920.

(iii) If three hours of non-idle operation have been accumulated prior to the time a MIL is illuminated or trouble code set, stop the test and use the accumulated test results in the vehicle-pass determination as described in § 86.1912.

(iv) If three hours of non-idle operation have not been accumulated prior to the time a MIL is illuminated or trouble code is set, and you elect to repair the vehicle/engine, but ultimately determine that repairs cannot be completed in a timely manner, you may reject the vehicle from the test program

and replace it with another vehicle. If you repair or reject the vehicle, you must describe the MIL or trouble code information in your report under § 86.1920.

(c) Use appropriate fuels for testing, as follows:

(1) You may use any diesel fuel that meets the specifications for No. 2–D S500 or No. 2–D S15 in ASTM D 975 (incorporated by reference in § 86.1), as required in the calendar year that in-use testing occurs.

(2) You may use any biodiesel fuel blend that is either expressly allowed or not otherwise indicated as an unacceptable fuel in the vehicle's owner or operator manual or in the engine manufacturer's published fuel recommendations.

(3) You may drain a prospective test vehicle's fuel tank(s) and refill the tank(s) with diesel fuel conforming to ASTM D 975 specifications described in paragraph (c)(1) of this section.

(4) Any fuel that is added to the fuel tank(s) of a prospective test vehicle, or during an in-use test, must be purchased at a local retail establishment near the site of vehicle procurement or screening, or along the test route. Alternatively, the fuel may be drawn from a central fueling source, provided that the fuel used is representative of that which is commercially available in the area where the vehicle is operated.

(5) No post-refinery fuel additives are allowed, except that one or more specific fuel additives may be used during in-use testing if you can document that the owner/operator of the prospective test vehicle has a history of normally using the fuel treatment(s), and the fuel additive(s) is not prohibited in the vehicle's owner or operator manual or in the engine manufacturer's published fuel-additive recommendations.

(6) You may take fuel samples from test vehicles to ensure that appropriate fuels were used during in-use testing. If a vehicle fails the vehicle-pass criteria and you can show that an inappropriate fuel was used during the failed test, that particular test may be voided. You may drain the vehicle's fuel tank(s) and refill the tank(s) with diesel fuel conforming to the ASTM D 975 specifications described in paragraph (c)(1) of this section. You must report any fuel tests that are the basis of voiding a test in your report under § 86.1920.

(d) You must test the selected engines while they remain installed in the vehicle. Use portable emission-sampling equipment and field-testing procedures referenced in § 86.1375. Measure emissions of THC, NMHC (by any method specified in 40 CFR part 1065, subpart J), CO, NO_X, PM (as appropriate), O_2, and CO_2.

(e) For Phase 1 testing, you must test the engine under conditions reasonably expected to be encountered during normal vehicle operation and use consistent with the general NTE requirements described in § 86.1370–2007(a). For the purposes of this subpart, normal operation and use would generally include consideration of the vehicle's normal routes and loads (including auxiliary loads such as air conditioning in the cab), normal ambient conditions, and the normal driver.

(f) For Phase 2 testing, we may give specific directions, as described in § 86.1915(c)(2).

(g) Once an engine is set up for testing, test the engine for at least one shift-day. To complete a shift-day's worth of testing, start sampling at the beginning of a shift and continue sampling for the whole shift, subject to the calibration requirements of the portable emissions measurement systems. A shift-day is the period of a normal workday for an individual employee. If the first shift-day of testing does not involve at least 3 hours of accumulated non-idle operation, repeat the testing for a second shift-day. If the second shift-day of testing also does not result in at least 3 hours of accumulated non-idle operation, you may choose whether or not to continue testing with that vehicle. If after two shift-days you discontinue testing before accumulating 3 hours of non-idle operation on either day, evaluate the valid NTE samples as described in § 86.1912 and include the data in the reporting and record keeping requirements specified in §§ 86.1920 and 1925. Count the engine toward meeting your testing requirements under this subpart and use the data for deciding whether additional engines

must be tested under the applicable Phase 1 or Phase 2 test plan.

(h) You have the option to test longer than the two shift-day period described in paragraph (g) of this section.

(i) You may count a vehicle as meeting the vehicle-pass criteria described in § 86.1912 if a shift day of testing or two-shift days of testing (with the requisite non-idle/idle operation time as in paragraph (g) of this section), or if the extended testing you elected under paragraph (h) of this section does not generate a single valid NTE sampling event, as described in § 86.1912(b). Count the engine towards meeting your testing requirements under this subpart.

(j) You may ask us to waive measurement of particular emissions if you can show that in-use testing for such emissions is not necessary.

§ 86.1912 How do I determine whether an engine meets the vehicle-pass criteria?

In general, the average emissions for each regulated pollutant must remain at or below the NTE threshold in paragraph (a) of this section for at least 90 percent of the valid NTE sampling events, as defined in paragraph (b) of this section. For 2007 through 2009 model year engines, the average emissions from every NTE sampling event must also remain below the NTE thresholds in paragraph (f)(2) of this section. Perform the following steps to determine whether an engine meets the vehicle-pass criteria:

(a) Determine the NTE threshold for each pollutant subject to an NTE standard by adding all three of the following terms and rounding the result to the same number of decimal places as the applicable NTE standard:

(1) The applicable NTE standard.

(2) The in-use compliance testing margin specified in § 86.007–11(h), if any.

(3) An accuracy margin for portable in-use equipment when testing is performed under the special provisions of § 86.1930, depending on the pollutant, as follows:

(i) NMHC: 0.17 grams per brake horsepower-hour.

(ii) CO: 0.60 grams per brake horsepower-hour.

(iii) NO_X: 0.50 grams per brake horsepower-hour.

(iv) PM: 0.10 grams per brake horsepower-hour.

(4) Accuracy margins for portable in-use equipment for testing not performed under the special provisions of § 86.1930, to be determined by rulemaking as indicated in § 86.1935.

(b) For the purposes of this subpart, a valid NTE sampling event consists of at least 30 seconds of continuous operation in the NTE control area. An NTE event begins when the engine starts to operate in the NTE control area and continues as long as engine operation remains in this area (see § 86.1370). When determining a valid NTE sampling event, exclude all engine operation in approved NTE limited testing regions under § 86.1370–2007(b)(6) and any approved NTE deficiencies under § 86.007–11(a)(4)(iv). Engine operation in the NTE control area of less than 30 contiguous seconds does not count as a valid NTE sampling event; operating periods of less than 30 seconds in the NTE control area, but outside of any allowed deficiency area or limited testing region, will not be added together to make a 30 second or longer event. Exclude any portion of a sampling event that would otherwise exceed the 5.0 percent limit for the time-weighted carve-out defined in § 86.1370–2007(b)(7). For EGR-equipped engines, exclude any operation that occurs during the cold-temperature operation defined by the equations in § 86.1370–2007(f)(1).

(c) Calculate the average emission level for each pollutant over each valid NTE sampling event as specified in 40 CFR part 1065, subpart G, using each NTE event as an individual test interval. This should include valid NTE events from all days of testing.

(d) Calculate a time-weighted vehicle-pass ratio (R_{pass}) for each pollutant. To do this, first sum the time from each valid NTE sampling event whose average emission level is at or below the NTE threshold for that pollutant, then divide this value by the sum of the engine operating time from all valid NTE events for that pollutant. Round the resulting vehicle-pass ratio to two decimal places.

(1) Calculate the time-weighted vehicle-pass ratio for each pollutant as follows:

$$R_{pass} = \frac{\sum_{m=1}^{n_{pass}} t}{\sum_{k=1}^{n_{total}} t}$$

Where:

n_{pass} = the number of valid sampling events for which the average emission level is at or below the NTE threshold.

n_{total} = the total number of valid NTE sampling events.

(2) For both the numerator and the denominator of the vehicle-pass ratio, use the smallest of the following values for determining the duration, t, of any NTE sampling event:

(i) The measured time in the NTE control area that is valid for an NTE sampling event.

(ii) 600 seconds.

(iii) 10 times the length of the shortest valid NTE sampling event for all testing with that engine.

(e) The following example illustrates how to select the duration of NTE sampling events for calculations, as described in paragraph (d) of this section:

NTE sample	Duration of NTE sample (seconds)	Duration Limit Applied?	Duration used in calculations (seconds)
1	45	No	45
2	168	No	168
3	605	Yes. Use 10 times shortest valid NTE.	450
4	490	Yes. Use 10 times shortest valid NTE.	450
5	65	No	65

(f) Engines meet the vehicle-pass criteria under this section if they meet both of the following criteria:

(1) The vehicle-pass ratio calculated according to paragraph (d) of this section must be at least 0.90 for each pollutant.

(2) For model year 2007 through 2009 engines, emission levels from every valid NTE sampling event must be less than 2.0 times the NTE thresholds calculated according to paragraph (a) of this section for all pollutants, except that engines certified to a NO_X FEL at or below 0.50 g/bhp-hr may meet the vehicle-pass criteria for NO_X if measured NO_X emissions from every valid NTE sample are less than either 2.0 times the NTE threshold for NO_X or 2.0 g/bhp-hr, whichever is greater.

§ 86.1915 What are the requirements for Phase 1 and Phase 2 testing?

For all selected engine families, you must do the following:

(a) To determine the number of engines you must test from each selected engine family under Phase 1 testing, use the following criteria:

(1) Start by measuring emissions from five engines using the procedures described in § 86.1375. If all five engines comply fully with the vehicle-pass criteria in § 86.1912 for all pollutants, you may stop testing. This completes your testing requirements under this subpart for the applicable calendar year for that engine family.

(2) If one of the engines tested under paragraph (a)(1) of this section fails to comply fully with the vehicle-pass criteria in § 86.1912 for one or more pollutants, test one more engine. If this additional engine complies fully with the vehicle-pass criteria in § 86.1912 for all pollutants, you may stop testing. This completes your testing requirements under this subpart for the applicable calendar year for that engine family.

(3) If your testing results under paragraphs (a)(1) and (2) of this section do not satisfy the criteria for completing your testing requirements under those paragraphs for all pollutants, test four additional engines so you have tested a total of ten engines.

(4) An engine that fails to fully comply with the vehicle-pass criteria in § 86.1912 for any pollutant does not comply with the vehicle-pass criteria in § 86.1912 for the purposes of determining the number of engines to test from each selected engine family under this paragraph.

(b) For situations where a total of ten engines must be tested under paragraph (a)(3) of this section, the results of Phase 1 testing lead to the following outcomes:

(1) If at least eight of the ten engines comply fully with the vehicle-pass criteria in § 86.1912 for all pollutants, you may stop testing. This completes your testing requirements under this subpart for the applicable calendar year for that engine family.

(2) If six or seven vehicles from the Phase 1 sample of test vehicles comply fully with the vehicle-pass criteria in § 86.1912 for all pollutants, then you must engage in follow-up discussions with us to determine whether any further testing (including Phase 2 testing), data submissions, or other actions may be warranted.

(3) If fewer than six of the ten engines tested under paragraph (a) of this section comply fully with the vehicle-pass criteria in § 86.1912 for all pollutants, we may require you to initiate Phase 2 testing, as described in paragraph (c) of this section.

(4) You may under any circumstances elect to conduct Phase 2 testing following the completion of Phase 1 testing. All the provisions of paragraph (c) of this section apply to this Phase 2 testing.

(c) If you perform Phase 2 testing for any reason, test your engines as follows:

(1) You must test ten additional engines using the test procedures described in § 86.1375, unless we require you to test fewer vehicles.

(2) We may give you any of the following additional directions in selecting and testing engines:

(i) We may require you to select a certain subset of your engine family. This may include, for example, engines within a specific power range, engines used in particular applications, or engines installed in vehicles from a particular manufacturer.

(ii) We may direct you to test engines in a way that simulates the type of driving and ambient conditions associated with high emissions experienced during Phase 1 testing.

(iii) We may direct you to test engines in a specific state or any number of contiguous states.

(iv) We may direct you to select engines from the same sources used for previous testing, or from different sources.

(v) We may require that you complete your testing and reporting under Phase 2 within a certain period. This period may not be shorter than three months and must allow a reasonable amount of time to identify and test enough vehicles. We would generally expect this testing to be completed within the overall time period specified in § 86.1905(d).

§ 86.1917 How does in-use testing under this subpart relate to the emission-related warranty in Section 207(a)(1) of the Clean Air Act?

(a) An exceedance of the NTE found through the in-use testing program under this subpart is not by itself sufficient to show a breach of warranty under Clean Air Act section 207(a)(1) (42 U.S.C. 7541(a)(1)). A breach of warranty would also require one of the following things:

(1) That, at the time of sale, the engine or vehicle was designed, built, and equipped in a manner that does not conform in all material respects reasonably related to emission controls to the engine as described in the application for certification and covered by the certificate; or

(2) A defect in materials or workmanship of a component causes the vehicle or engine to fail to conform to the applicable regulations for its useful life.

(b) To the extent that in-use NTE testing does not reveal such a material deficiency at the time of sale in the design or manufacture of an engine compared with the certified engine, or a defect in the materials and workmanship of a component or part, test results showing an exceedance of the NTE by itself would not show a breach of the warranty under 42 U.S.C. 7541(a)(1).

§ 86.1920 What in-use testing information must I report to EPA?

(a) Send us electronic reports at *inuse@epa.gov* using an approved information format. If you want to use a different format, send us a written request with justification.

(b) Within 30 days after the end of each calendar quarter, send us reports

containing the test data from each engine for which testing was completed during the calendar quarter. Alternatively, you may separately send us the test data within 30 days after you complete testing for an engine. Once you send us information under this section, you need not send that information again in later reports. Prepare your test reports as follows:

(1) For each engine family, describe how you recruited vehicles. Describe how you used any criteria or thresholds to narrow your search or to screen individual vehicles.

(2) Include a summary of the candidate vehicles you have rejected and the reasons you rejected them, whether you base the rejection on the criteria in § 86.1908(a) or anything else. If you rejected a candidate vehicle due to misfueling, included the results of any fuel sample tests.

(3) For the test vehicle, include the following background information:

(i) The EPA engine-family designation, and the engine's model number, total displacement, and power rating.

(ii) The applicable test phase (Phase 1 or Phase 2).

(iii) The date EPA selected the engine family for testing.

(iv) The vehicle's make and model and the year it was built.

(v) The vehicle identification number and engine serial number.

(vi) The vehicle's type or application (such as delivery, line haul, or dump truck). Also, identify the type of trailer, if applicable.

(vii) The vehicle's maintenance and use history.

(viii) The known status history of the vehicle's OBD system and any actions the owner or operator took to address OBD trouble codes or MIL illumination over the vehicle's lifetime.

(ix) Any OBD codes or MIL illumination that occur after you accept the vehicle for in-use testing under this subpart.

(x) Any steps you take to maintain, adjust, modify, or repair the vehicle or its engine to prepare for or continue testing, including actions to address OBD trouble codes or MIL illumination. Include any steps you took to drain and refill the vehicle's fuel tank(s) to correct misfueling, and the results of any fuel test conducted to identify misfueling.

(4) For each test, include the following data and measurements:

(i) The date and time of testing, and the test number.

(ii) Shift-days of testing (*see* § 86.1910 (g)), duration of testing, and the total hours of non-idle operation.

(iii) Route and location of testing. You may base this description on the output from a global-positioning system.

(iv) The steps you took to ensure that vehicle operation during testing was consistent with normal operation and use, as described in § 86.1910(e).

(v) Fuel test results, if fuel was tested under § 86.1908 or 86.1910.

(vi) The vehicle's mileage at the start of the test. Include the engine's total lifetime hours of operation, if available.

(vii) Ambient temperature, dewpoint, and atmospheric pressure at the start and finish of each valid NTE event.

(viii) The number of valid NTE events (*see* § 86.1912(b)).

(ix) Average emissions for each pollutant over each valid NTE event. Describe the method you used to determine NMHC as specified in 40 CFR part 1065, subpart J. See Appendix I of this subpart for an example of graphically summarizing NTE emission results.

(x) Exhaust-flow measurements.

(xi) Vehicle-pass ratios (*see* § 86.1912(d)).

(xii) Recorded one-hertz test data, including, but not limited to, the following parameters:

(A) Ambient temperature.

(B) Ambient pressure.

(C) Ambient humidity.

(D) Altitude.

(E) Emissions of THC, NMHC, CO, CO_2 or O_2, NO_X, and PM (as appropriate). Report results for CH_4 if it was measured and used to determine NMHC.

(F) Differential back-pressure of any PEMS attachments to vehicle exhaust.

(G) Exhaust flow.

(H) Exhaust aftertreatment temperatures, if the engine meets the specifications of § 86.1370–2007(g).

(I) Engine speed.

(J) Engine brake torque.

(K) Engine coolant temperature.

(L) Intake manifold temperature.

(M) Intake manifold pressure.

(N) Throttle position.

(O) Any parameter sensed or controlled in order to modulate the emission-control system or fuel-injection timing.

(5) For each engine family, identify the applicable requirements, as follows:

(i) The applicable NTE thresholds.

(ii) Vehicle and engine information needed to identify the limited testing regions under § 86.1370–2007(b)(6) and (7).

(iii) Vehicle and engine information needed to identify any approved NTE deficiencies under § 86.007–11(a)(4)(iv).

(6) Include the following summary information after you complete testing with the engine:

(i) State whether the engine meets the vehicle-pass criteria in § 86.1912(f).

(ii) Identify how many engines you have tested from the applicable engine family and how many engines still need to be tested.

(iii) Identify how many engines from an engine family have passed the vehicle-pass criteria and the number that have failed the vehicle-pass criteria (see § 86.1912(f)).

(iv) If possible, state the outcome of Phase 1 testing for the engine family based on the criteria in § 86.1915(b).

(c) In your reports under this section, you must do all the following:

(1) Include results from all emission testing required under this subpart.

(2) Describe if any testing or evaluations were conducted to determine why a vehicle failed the vehicle-pass criteria in § 86.1912.

(3) Describe the purpose of any diagnostic procedures you conduct.

(4) Describe any instances in which the OBD system illuminated the MIL or set trouble codes. Also describe any approved actions taken to address the trouble codes or MIL.

(5) Describe any instances of misfueling, the approved actions taken to address the problem, and the results of any associated fuel sample testing.

(6) Describe any incomplete or invalid tests that were conducted under this subpart.

(d) Send us an electronic notification at *inuse@epa.gov* describing any voluntary vehicle/engine emission evaluation testing you intend to conduct with portable in-use measurement systems on the same engine families that are being tested under this subpart, from the time that engine family was selected for in-use testing under § 86.1905 until the final results of all testing for that engine family are reported to us under this section.

(e) Send us an electronic notification at *application-ci_cert@epa.gov* within 15 days after your initial review of the test data for a selected engine family indicates that three engines in Phase 1 testing have failed to comply with the vehicle-pass criteria. Similarly, send us an electronic notification at the above electronic address within 3 days after your initial review of the test data for a selected engine family indicates that *any* engine in Phase 2 testing failed to comply with the vehicle-pass criteria.

(f) We may ask you to send us less information in your reports than we specify in this section.

(g) We may require you to send us more information to evaluate whether your engine family meets the requirements of this part, or to help inform potential decisions concerning Phase 2 testing under § 86.1915.

§ 86.1925 What records must I keep?

(a) Organize and maintain your records as described in this section. We may review your records at any time, so it is important to keep required information readily available.

(b) Keep the following paper or electronic records of your in-use testing for five years after you complete all the testing required for an engine family:

(1) Keep a copy of the reports described in § 86.1920.

(2) Keep any additional records, including forms you create, related to any of the following:

(i) The procurement and vehicle-selection process described in § 86.1908, including the vehicle owner's name, address, phone number, and e-mail address.

(ii) Pre-test maintenance and adjustments to the engine performed under § 86.1910.

(iii) Test results for all void, incomplete, and voluntary testing described in § 86.1920.

(iv) Evaluations to determine why a vehicle failed the vehicle-pass criteria described in § 86.1912.

(3) Keep a copy of the relevant calibration results required by 40 CFR part 1065.

§ 86.1930 What special provisions apply from 2005 through 2007?

We may direct you to test engines under this subpart for emissions other than PM in 2005 and 2006, and for PM emissions in 2006 and 2007. In these interim periods, all the provisions of this subpart apply, with the following exceptions:

(a) We will select engine families for testing of emissions other than PM only when the manufacturer's Statement of Compliance specifically describes the family as being designed to comply with NTE requirements.

(b) If you participate in the test program described in § 86.1935(a), you may limit your testing under Phase 1 to a maximum of five vehicles per selected engine family.

(c) We will not direct you to do the Phase 2 testing in § 86.1915(c), regardless of measured emission levels.

(d) For purposes of calculating the NTE thresholds under § 86.1912(a) for any 2006 and earlier model year engine that is not subject to the emission standards in § 86.007–11, determine the applicable NTE standards as follows:

(1) If any numerical NTE requirements specified in the terms of any consent decree apply to the engine family, use those values as the NTE standards for testing under this subpart.

(2) If a numerical NTE requirement is not specified in a consent decree for the engine family, the NTE standards are 1.25 times the applicable FELs or the applicable emission standards specified in § 86.004–11(a)(1) or § 86.098–11(a)(1).

(e) In the report required in § 86.1920(b), you must submit the deficiencies and limited testing region reports (see § 86.007–11(a)(4)(iv) and § 86.1370–2007(b)(6) and (7)) for 2006 and earlier model year engines tested under this section.

(f) Testing under this section may be extended as described in § 86.1935(d).

§ 86.1935 What special provisions may apply as a consequence of a delay in the accuracy margin report for portable emission measurement systems?

(a) A memorandum entitled, ''Memorandum of Agreement, Program to Develop Emission Measurement Accuracy Margins for Heavy-Duty In-Use Testing'' describes a test program for establishing measurement accuracy margins related to testing under § 86.1912(a)(4). This document is available at *http://www.epa.gov/otaq/hd-hwy.htm* or at the mailing address specified in § 86.1905(g).

(b) If there is a delay in receiving the written final report for either gaseous emissions or PM emissions described in the agreement referenced in paragraph (a) of this section, and that delay is not attributable to engine manufacturers failing to meet their commitments under that agreement, the following provisions apply for the respective pollutant type (gaseous or PM emissions):

(1) If the delay is 3 months or less, we will delay the designation of engine families for testing in the applicable calendar year, as described in § 86.1905(d), by the same number of additional whole months (rounded up) needed to complete the report.

(2) If the delay is more than 3 months but less than 12 months, we may continue to designate engine families for testing under the special provisions described in § 86.1930 for an additional year.

(3) If the delay is longer than 12 months, the following approach is established for the applicable calendar year:

(i) If the delay is longer than 12 months but less than 15 months, we will follow the steps described in paragraph (b)(1) of this section.

(ii) If the delay is longer than 15 months but less than 24 months, we will follow the steps described in paragraph (b)(2) of this section for the applicable calendar year.

(iii) If the delay is longer than 24 months, the applicable gaseous or PM emission testing program will go into abeyance.

(c) If one or more engine manufacturers fail to meet commitments under the agreement described in paragraph

(a) of this section and such a failure results in a delay in the final written report for either gaseous emissions (NO_X, NMHC and CO) or PM emissions described in the agreement, the following provisions apply for the respective pollutant type (gaseous or PM emissions):

(1) If the delay is 3 months or less, we will delay the designation of engine families for testing in the applicable calendar year, as described in §86.1905(d), by the same number of additional whole months (rounded up) needed to complete the report.

(2) If the delay is more than 3 months but less than 12 months, the provisions of this subpart will not apply for the otherwise applicable calendar year (2007 for gaseous emissions and 2008 for PM emissions), subject to the following provisions:

(i) We may identify the number of engine families that would otherwise have been designated for testing in that calendar year for the delayed pollutant type and direct manufacturers to test that number of engine families under the special provisions described in §86.1930 and additionally in any later calendar year once the provisions of this subpart begin for that pollutant type, without counting those accumulated engine families toward the allowable annual cap on the number of engine families specified in §86.1905.

(ii) A delay for PM emissions would not be a sufficient basis for delaying the program for gaseous emissions. Similarly, a delay for gaseous emissions would not be a sufficient basis for delaying the program for PM emissions.

(iii) The normal 18-month period for testing and reporting results specified in §86.1905(d) is extended to 24 months for any accumulated engine-family designation described in paragraph (c)(2)(i) of this section. The additional time extensions for testing and reporting results as specified in §86.1905(d) also apply.

(3) If the delay is longer than 12 months, the following approach is established for the applicable calendar year:

(i) If the delay is longer than 12 months but less than 15 months, we will follow the steps described in paragraph (c)(1) of this section.

(ii) If the delay is longer than 15 months but less than 24 months, we will follow the steps described in paragraph (c)(2) of this section for the applicable calendar year.

(iii) If the delay is longer than 24 months, we will continue to follow the steps described in paragraphs (c)(1) and (c)(2) of this section, including the accumulation of engine families for testing, until the report is received and the fully implemented program commences.

(d) We may determine that any individual manufacturer's failure under paragraph (c) of this section constitutes a failure by all engine manufacturers.

(e) Nothing in this section affects our ability to select engines from any model year beginning with model year 2007.

(f) If we determine that fundamental technical problems with portable in-use PM measurement systems are not resolvable in a reasonable time, the provisions of this subpart, as they apply to PM, will go into abeyance until we determine that suitable emission-measurement devices are available for in-use testing.

(g) As described in §86.1930(b), engine manufacturers contributing to the test programs described in the agreement referenced in paragraph (a) of this section may limit their testing under the special provisions described in §86.1930 to five engines in each selected engine family.

APPENDIX I TO SUBPART T—SAMPLE GRAPHICAL SUMMARY OF NTE EMISSION RESULTS

The following figure shows an example of a graphical summary of NTE emission results:

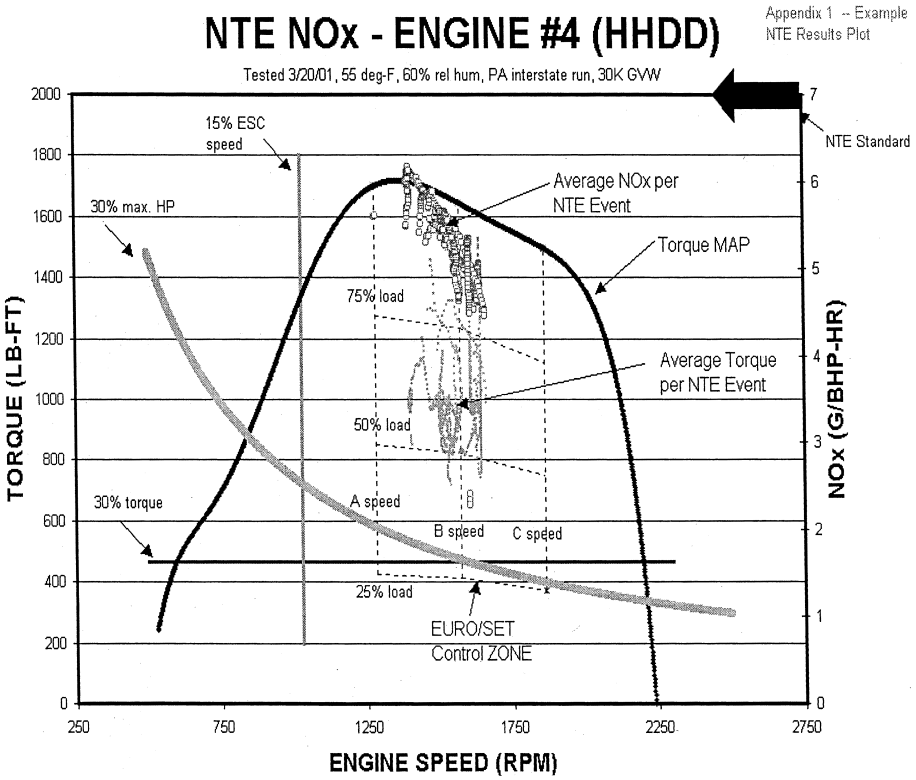

APPENDIX I TO PART 86—URBAN DYNAMOMETER SCHEDULES

(a) EPA Urban Dynamometer Driving Schedule for Light-Duty Vehicles and Light-Duty Trucks.

EPA URBAN DYNAMOMETER DRIVING SCHEDULE

[Speed versus Time Sequence]

Time (sec.)	Speed (m.p.h.)	Time (sec.)	Speed (m.p.h.)	Time (sec.)	Speed (m.p.h.)
0	0.0	1	0.0	2	0.0
3	0.0	4	0.0	5	0.0
6	0.0	7	0.0	8	0.0
9	0.0	10	0.0	11	0.0
12	0.0	13	0.0	14	0.0
15	0.0	16	0.0	17	0.0
18	0.0	19	0.0	20	0.0
21	3.0	22	5.9	23	8.6
24	11.5	25	14.3	26	16.9
27	17.3	28	18.1	29	20.7
30	21.7	31	22.4	32	22.5
33	22.1	34	21.5	35	20.9
36	20.4	37	19.8	38	17.0
39	14.9	40	14.9	41	15.2
42	15.5	43	16.0	44	17.1

EPA URBAN DYNAMOMETER—Continued DRIVING SCHEDULE

[Speed versus Time Sequence]

Time (sec.)	Speed (m.p.h.)	Time (sec.)	Speed (m.p.h.)	Time (sec.)	Speed (m.p.h.)
45	19.1	46	21.1	47	22.7
48	22.9	49	22.7	50	22.6
51	21.3	52	19.0	53	17.1
54	15.8	55	15.8	56	17.7
57	19.8	58	21.6	59	23.2
60	24.2	61	24.6	62	24.9
63	25.0	64	24.6	65	24.5
66	24.7	67	24.8	68	24.7
69	24.6	70	24.6	71	25.1
72	25.6	73	25.7	74	25.4
75	24.9	76	25.0	77	25.4
78	26.0	79	26.0	80	25.7
81	26.1	82	26.7	83	27.5
84	28.6	85	29.3	86	29.8
87	30.1	88	30.4	89	30.7
90	30.7	91	30.5	92	30.4
93	30.3	94	30.4	95	30.8
96	30.4	97	29.9	98	29.5
99	29.8	100	30.3	101	30.7
102	30.9	103	31.0	104	30.9
105	30.4	106	29.8	107	29.9
108	30.2	109	30.7	110	31.2
111	31.8	112	32.2	113	32.4

EPA URBAN DYNAMOMETER—Continued
DRIVING SCHEDULE
[Speed versus Time Sequence]

Time (sec.)	Speed (m.p.h.)	Time (sec.)	Speed (m.p.h.)	Time (sec.)	Speed (m.p.h.)
114	32.2	115	31.7	116	28.6
117	25.3	118	22.0	119	18.7
120	15.4	121	12.1	122	8.8
123	5.5	124	2.2	125	0.0
126	0.0	127	0.0	128	0.0
129	0.0	130	0.0	131	0.0
132	0.0	133	0.0	134	0.0
135	0.0	136	0.0	137	0.0
138	0.0	139	0.0	140	0.0
141	0.0	142	0.0	143	0.0
144	0.0	145	0.0	146	0.0
147	0.0	148	0.0	149	0.0
150	0.0	151	0.0	152	0.0
153	0.0	154	0.0	155	0.0
156	0.0	157	0.0	158	0.0
159	0.0	160	0.0	161	0.0
162	0.0	163	0.0	164	3.3
165	6.6	166	9.9	167	13.2
168	16.5	169	19.8	170	22.2
171	24.3	172	25.8	173	26.4
174	25.7	175	25.1	176	24.7
177	25.0	178	25.2	179	25.4
180	25.8	181	27.2	182	26.5
183	24.0	184	22.7	185	19.4
186	17.7	187	17.2	188	18.1
189	18.6	190	20.0	191	22.2
192	24.5	193	27.3	194	30.5
195	33.5	196	36.2	197	37.3
198	39.3	199	40.5	200	42.1
201	43.5	202	45.1	203	46.0
204	46.8	205	47.5	206	47.5
207	47.3	208	47.2	209	47.0
210	47.0	211	47.0	212	47.0
213	47.0	214	47.2	215	47.4
216	47.9	217	48.5	218	49.1
219	49.5	220	50.0	221	50.6
222	51.0	223	51.5	224	52.2
225	53.2	226	54.1	227	54.6
228	54.9	229	55.0	230	54.9
231	54.6	232	54.6	233	54.8
234	55.1	235	55.5	236	55.7
237	56.1	238	56.3	239	56.6
240	56.7	241	56.7	242	56.5
243	56.5	244	56.5	245	56.5
246	56.5	247	56.5	248	56.4
249	56.1	250	55.8	251	55.1
252	54.6	253	54.2	254	54.0
255	53.7	256	53.6	257	53.9
258	54.0	259	54.1	260	54.1
261	53.8	262	53.4	263	53.0
264	52.6	265	52.1	266	52.4
267	52.0	268	51.9	269	51.7
270	51.5	271	51.6	272	51.8
273	52.1	274	52.5	275	53.0
276	53.5	277	54.0	278	54.9
279	55.4	280	55.6	281	56.0
282	56.0	283	55.8	284	55.2
285	54.5	286	53.6	287	52.5
288	51.5	289	51.5	290	51.5
291	51.1	292	50.1	293	50.0
294	50.1	295	50.0	296	49.6
297	49.5	298	49.5	299	49.5
300	49.1	301	48.6	302	48.1
303	47.2	304	46.1	305	45.0
306	43.8	307	42.6	308	41.5
309	40.3	310	38.5	311	37.0
312	35.2	313	33.8	314	32.5
315	31.5	316	30.6	317	30.5
318	30.0	319	29.0	320	27.5

EPA URBAN DYNAMOMETER—Continued
DRIVING SCHEDULE
[Speed versus Time Sequence]

Time (sec.)	Speed (m.p.h.)	Time (sec.)	Speed (m.p.h.)	Time (sec.)	Speed (m.p.h.)
321	24.8	322	21.5	323	20.1
324	19.1	325	18.5	326	17.0
327	15.5	328	12.5	329	10.8
330	8.0	331	4.7	332	1.4
333	0.0	334	0.0	335	0.0
336	0.0	337	0.0	338	0.0
339	0.0	340	0.0	341	0.0
342	0.0	343	0.0	344	0.0
345	0.0	346	0.0	347	1.0
348	4.3	349	7.6	350	10.9
351	14.2	352	17.3	353	20.0
354	22.5	355	23.7	356	25.2
357	26.6	358	28.1	359	30.0
360	30.8	361	31.6	362	32.1
363	32.8	364	33.6	365	34.5
366	34.6	367	34.9	368	34.8
369	34.5	370	34.7	371	35.5
372	36.0	373	36.0	374	36.0
375	36.0	376	36.0	377	36.0
378	36.1	379	36.4	380	36.5
381	36.4	382	36.0	383	35.1
384	34.1	385	33.5	386	31.4
387	29.0	388	25.7	389	23.0
390	20.3	391	17.5	392	14.5
393	12.0	394	8.7	395	5.4
396	2.1	397	0.0	398	0.0
399	0.0	400	0.0	401	0.0
402	0.0	403	2.6	404	5.9
405	9.2	406	12.5	407	15.8
408	19.1	409	22.4	410	25.0
411	25.6	412	27.5	413	29.0
414	30.0	415	30.1	416	30.0
417	29.7	418	29.3	419	28.8
420	28.0	421	25.0	422	21.7
423	18.4	424	15.1	425	11.8
426	8.5	427	5.2	428	1.9
429	0.0	430	0.0	431	0.0
432	0.0	433	0.0	434	0.0
435	0.0	436	0.0	437	0.0
438	0.0	439	0.0	440	0.0
441	0.0	442	0.0	443	0.0
444	0.0	445	0.0	446	0.0
447	0.0	448	3.3	449	6.6
450	9.9	451	13.2	452	16.5
453	19.8	454	23.1	455	26.4
456	27.8	457	29.1	458	31.5
459	33.0	460	33.6	461	34.8
462	35.1	463	35.6	464	36.1
465	36.0	466	36.1	467	36.2
468	36.0	469	35.7	470	36.0
471	36.0	472	35.6	473	35.5
474	35.4	475	35.2	476	35.2
477	35.2	478	35.2	479	35.2
480	35.2	481	35.0	482	35.1
483	35.2	484	35.5	485	35.2
486	35.0	487	35.0	488	35.0
489	34.8	490	34.6	491	34.5
492	33.5	493	32.0	494	30.1
495	28.0	496	25.5	497	22.5
498	19.8	499	16.5	500	13.2
501	10.3	502	7.2	503	4.0
504	1.0	505	0.0	506	0.0
507	0.0	508	0.0	509	0.0
510	0.0	511	1.2	512	3.5
513	5.5	514	6.5	515	8.5
516	9.6	517	10.5	518	11.9
519	14.0	520	16.0	521	17.7
522	19.0	523	20.1	524	21.0
525	22.0	526	23.0	527	23.8

EPA URBAN DYNAMOMETER—Continued
DRIVING SCHEDULE
[Speed versus Time Sequence]

Time (sec.)	Speed (m.p.h.)	Time (sec.)	Speed (m.p.h.)	Time (sec.)	Speed (m.p.h.)
528	24.5	529	24.9	530	25.0
531	25.0	532	25.0	533	25.0
534	25.0	535	25.0	536	25.6
537	25.8	538	26.0	539	25.6
540	25.2	541	25.0	542	25.0
543	25.0	544	24.4	545	23.1
546	19.8	547	16.5	548	13.2
549	9.9	550	6.6	551	3.3
552	0.0	553	0.0	554	0.0
555	0.0	556	0.0	557	0.0
558	0.0	559	0.0	560	0.0
561	0.0	562	0.0	563	0.0
564	0.0	565	0.0	566	0.0
567	0.0	568	0.0	569	3.3
570	6.6	571	9.9	572	13.0
573	14.6	574	16.0	575	17.0
576	17.0	577	17.0	578	17.5
579	17.7	580	17.7	581	17.5
582	17.0	583	16.9	584	16.6
585	17.0	586	17.1	587	17.0
588	16.6	589	16.5	590	16.5
591	16.6	592	17.0	593	17.6
594	18.5	595	19.2	596	20.2
597	21.0	598	21.1	599	21.2
600	21.6	601	22.0	602	22.4
603	22.5	604	22.5	605	22.5
606	22.7	607	23.7	608	25.1
609	26.0	610	26.5	611	27.0
612	26.1	613	22.8	614	19.5
615	16.2	616	12.9	617	9.6
618	6.3	619	3.0	620	0.0
621	0.0	622	0.0	623	0.0
624	0.0	625	0.0	626	0.0
627	0.0	628	0.0	629	0.0
630	0.0	631	0.0	632	0.0
633	0.0	634	0.0	635	0.0
636	0.0	637	0.0	638	0.0
639	0.0	640	0.0	641	0.0
642	0.0	643	0.0	644	0.0
645	0.0	646	2.0	647	4.5
648	7.8	649	10.2	650	12.5
651	14.0	652	15.3	653	17.5
654	19.6	655	21.0	656	22.2
657	23.3	658	24.5	659	25.3
660	25.6	661	26.0	662	26.1
663	26.2	664	26.2	665	26.4
666	26.5	667	26.5	668	26.0
669	25.5	670	23.6	671	21.4
672	18.5	673	16.4	674	14.5
675	11.6	676	8.7	677	5.8
678	3.5	679	2.0	680	0.0
681	0.0	682	0.0	683	0.0
684	0.0	685	0.0	686	0.0
687	0.0	688	0.0	689	0.0
690	0.0	691	0.0	692	0.0
693	0.0	694	1.4	695	3.3
696	4.4	697	6.5	698	9.2
699	11.3	700	13.5	701	14.6
702	16.4	703	16.7	704	16.5
705	16.5	706	18.2	707	19.2
708	20.1	709	21.5	710	22.5
711	22.5	712	22.1	713	22.7
714	23.3	715	23.5	716	22.5
717	21.6	718	20.5	719	18.0
720	15.0	721	12.0	722	9.0
723	6.2	724	4.5	725	3.0
726	2.1	727	0.5	728	0.5
729	3.2	730	6.5	731	9.6
732	12.5	733	14.0	734	16.0

EPA URBAN DYNAMOMETER—Continued
DRIVING SCHEDULE
[Speed versus Time Sequence]

Time (sec.)	Speed (m.p.h.)	Time (sec.)	Speed (m.p.h.)	Time (sec.)	Speed (m.p.h.)
735	18.0	736	19.6	737	21.5
738	23.1	739	24.5	740	25.5
741	26.5	742	27.1	743	27.6
744	27.9	745	28.3	746	28.6
747	28.6	748	28.3	749	28.2
750	28.0	751	27.5	752	26.8
753	25.5	754	23.5	755	21.5
756	19.0	757	16.5	758	14.9
759	12.5	760	9.4	761	6.2
762	3.0	763	1.5	764	1.5
765	0.5	766	0.0	767	3.0
768	6.3	769	9.6	770	12.9
771	15.8	772	17.5	773	18.4
774	19.5	775	20.7	776	22.0
777	23.2	778	25.0	779	26.5
780	27.5	781	28.0	782	28.3
783	28.9	784	28.9	785	28.9
786	28.8	787	28.5	788	28.3
789	28.3	790	28.3	791	28.2
792	27.6	793	27.5	794	27.5
795	27.5	796	27.5	797	27.5
798	27.5	799	27.6	800	28.0
801	28.5	802	30.0	803	31.0
804	32.0	805	33.0	806	33.0
807	33.6	808	34.0	809	34.3
810	34.2	811	34.0	812	34.0
813	33.9	814	33.6	815	33.1
816	33.0	817	32.5	818	32.0
819	31.9	820	31.6	821	31.5
822	30.6	823	30.0	824	29.9
825	29.9	826	29.9	827	29.9
828	29.6	829	29.5	830	29.5
831	29.3	832	28.9	833	28.2
834	27.7	835	27.0	836	25.5
837	23.7	838	22.0	839	20.5
840	19.2	841	19.2	842	20.1
843	20.9	844	21.4	845	22.0
846	22.6	847	23.2	848	24.0
849	25.0	850	26.0	851	26.6
852	26.6	853	26.8	854	27.0
855	27.2	856	27.8	857	28.1
858	28.8	859	28.9	860	29.0
861	29.1	862	29.0	863	28.1
864	27.5	865	27.0	866	25.8
867	25.0	868	24.5	869	24.8
870	25.1	871	25.5	872	25.7
873	26.2	874	26.9	875	27.5
876	27.8	877	28.4	878	29.0
879	29.2	880	29.1	881	29.0
882	28.9	883	28.5	884	28.1
885	28.0	886	28.0	887	27.6
888	27.2	889	26.6	890	27.0
891	27.5	892	27.8	893	28.0
894	27.8	895	28.0	896	28.0
897	28.0	898	27.7	899	27.4
900	26.9	901	26.6	902	26.5
903	26.5	904	26.5	905	26.3
906	26.2	907	26.2	908	25.9
909	25.6	910	25.6	911	25.9
912	25.8	913	25.5	914	24.6
915	23.5	916	22.2	917	21.6
918	21.6	919	21.7	920	22.6
921	23.4	922	24.0	923	24.2
924	24.4	925	24.9	926	25.1
927	25.2	928	25.3	929	25.5
930	25.2	931	25.0	932	25.0
933	25.0	934	24.7	935	24.5
936	24.3	937	24.3	938	24.5
939	25.0	940	25.0	941	24.6

EPA URBAN DYNAMOMETER—Continued
DRIVING SCHEDULE
[Speed versus Time Sequence]

Time (sec.)	Speed (m.p.h.)	Time (sec.)	Speed (m.p.h.)	Time (sec.)	Speed (m.p.h.)
942	24.6	943	24.1	944	24.5
945	25.1	946	25.6	947	25.1
948	24.0	949	22.0	950	20.1
951	16.9	952	13.6	953	10.3
954	7.0	955	3.7	956	0.4
957	0.0	958	0.0	959	0.0
960	2.0	961	5.3	962	8.6
963	11.9	964	15.2	965	17.5
966	18.6	967	20.0	968	21.1
969	22.0	970	23.0	971	24.5
972	26.3	973	27.5	974	28.1
975	28.4	976	28.5	977	28.5
978	28.5	979	27.7	980	27.5
981	27.2	982	26.8	983	26.5
984	26.0	985	25.7	986	25.2
987	24.0	988	22.0	989	21.5
990	21.5	991	21.8	992	22.5
993	23.0	994	22.8	995	22.8
996	23.0	997	22.7	998	22.7
999	22.7	1000	23.5	1001	24.0
1002	24.6	1003	24.8	1004	25.1
1005	25.5	1006	25.6	1007	25.5
1008	25.0	1009	24.1	1010	23.7
1011	23.2	1012	22.9	1013	22.5
1014	22.0	1015	21.6	1016	20.5
1017	17.5	1018	14.2	1019	10.9
1020	7.6	1021	4.3	1022	1.0
1023	0.0	1024	0.0	1025	0.0
1026	0.0	1027	0.0	1028	0.0
1029	0.0	1030	0.0	1031	0.0
1032	0.0	1033	0.0	1034	0.0
1035	0.0	1036	0.0	1037	0.0
1038	0.0	1039	0.0	1040	0.0
1041	0.0	1042	0.0	1043	0.0
1044	0.0	1045	0.0	1046	0.0
1047	0.0	1048	0.0	1049	0.0
1050	0.0	1051	0.0	1052	0.0
1053	1.2	1054	4.0	1055	7.3
1056	10.6	1057	13.9	1058	17.0
1059	18.5	1060	20.0	1061	21.8
1062	23.0	1063	24.0	1064	24.8
1065	25.6	1066	26.5	1067	26.8
1068	27.4	1069	27.9	1070	28.3
1071	28.0	1072	27.5	1073	27.0
1074	27.0	1075	26.3	1076	24.5
1077	22.5	1078	21.5	1079	20.6
1080	18.0	1081	15.0	1082	12.3
1083	11.1	1084	10.6	1085	10.0
1086	9.5	1087	9.1	1088	8.7
1089	8.6	1090	8.8	1091	9.0
1092	8.7	1093	8.6	1094	8.0
1095	7.0	1096	5.0	1097	4.2
1098	2.6	1099	1.0	1100	0.0
1101	0.1	1102	0.6	1103	1.6
1104	3.6	1105	6.9	1106	10.0
1107	12.8	1108	14.0	1109	14.5
1110	16.0	1111	18.1	1112	20.0
1113	21.0	1114	21.2	1115	21.3
1116	21.4	1117	21.7	1118	22.5
1119	23.0	1120	23.8	1121	24.5
1122	25.0	1123	24.9	1124	24.8
1125	25.0	1126	25.4	1127	25.8
1128	26.0	1129	26.4	1130	26.6
1131	26.9	1132	27.0	1133	27.0
1134	27.0	1135	26.9	1136	26.8
1137	26.8	1138	26.5	1139	26.4
1140	26.0	1141	25.5	1142	24.6
1143	23.5	1144	21.5	1145	20.0
1146	17.5	1147	16.0	1148	14.0

EPA URBAN DYNAMOMETER—Continued
DRIVING SCHEDULE
[Speed versus Time Sequence]

Time (sec.)	Speed (m.p.h.)	Time (sec.)	Speed (m.p.h.)	Time (sec.)	Speed (m.p.h.)
1149	10.7	1150	7.4	1151	4.1
1152	0.8	1153	0.0	1154	0.0
1155	0.0	1156	0.0	1157	0.0
1158	0.0	1159	0.0	1160	0.0
1161	0.0	1162	0.0	1163	0.0
1164	0.0	1165	0.0	1166	0.0
1167	0.0	1168	0.0	1169	2.1
1170	5.4	1171	8.7	1172	12.0
1173	15.3	1174	18.6	1175	21.1
1176	23.0	1177	23.5	1178	23.0
1179	22.5	1180	20.0	1181	16.7
1182	13.4	1183	10.1	1184	6.8
1185	3.5	1186	0.2	1187	0.0
1188	0.0	1189	0.0	1190	0.0
1191	0.0	1192	0.0	1193	0.0
1194	0.0	1195	0.0	1196	0.0
1197	0.2	1198	1.5	1199	3.5
1200	6.5	1201	9.8	1202	12.0
1203	12.9	1204	13.0	1205	12.6
1206	12.8	1207	13.1	1208	13.1
1209	14.0	1210	15.5	1211	17.0
1212	18.6	1213	19.7	1214	21.0
1215	21.5	1216	21.8	1217	21.8
1318	21.5	1219	21.2	1220	21.5
1221	21.8	1222	22.0	1223	21.9
1224	21.7	1225	21.5	1226	21.5
1227	21.4	1228	20.1	1229	19.5
1230	19.2	1231	19.6	1232	19.8
1233	20.0	1234	19.5	1235	17.5
1236	15.5	1237	13.0	1238	10.0
1239	8.0	1240	6.0	1241	4.0
1242	2.5	1243	0.7	1244	0.0
1245	0.0	1246	0.0	1247	0.0
1248	0.0	1249	0.0	1250	0.0
1251	0.0	1252	1.0	1253	1.0
1254	1.0	1255	1.0	1256	1.0
1257	1.6	1258	3.0	1259	4.0
1260	5.0	1261	6.3	1262	8.0
1263	10.0	1264	10.5	1265	9.5
1266	8.5	1267	7.6	1268	8.8
1269	11.0	1270	14.0	1271	17.0
1272	19.5	1273	21.0	1274	21.8
1275	22.2	1276	23.0	1277	23.6
1278	24.1	1279	24.5	1280	24.5
1281	24.0	1282	23.5	1283	23.5
1284	23.5	1285	23.5	1286	23.5
1287	23.5	1288	24.0	1289	24.1
1290	24.5	1291	24.7	1292	25.0
1293	25.4	1294	25.6	1295	25.7
1296	26.0	1297	26.2	1298	27.0
1299	27.8	1300	28.3	1301	29.0
1302	29.1	1303	29.0	1304	28.0
1305	24.7	1306	21.4	1307	18.1
1308	14.8	1309	11.5	1310	8.2
1311	4.9	1312	1.6	1313	0.0
1314	0.0	1315	0.0	1316	0.0
1317	0.0	1318	0.0	1319	0.0
1320	0.0	1321	0.0	1322	0.0
1323	0.0	1324	0.0	1325	0.0
1326	0.0	1327	0.0	1328	0.0
1329	0.0	1330	0.0	1331	0.0
1332	0.0	1333	0.0	1334	0.0
1335	0.0	1336	0.0	1337	0.0
1338	1.5	1339	4.8	1340	8.1
1341	11.4	1342	13.2	1343	15.1
1344	16.8	1345	18.3	1346	19.5
1347	20.3	1348	21.3	1349	21.9
1350	22.1	1351	22.4	1352	22.0
1353	21.6	1354	21.1	1355	20.5

EPA URBAN DYNAMOMETER—Continued DRIVING SCHEDULE

[Speed versus Time Sequence]

Time (sec.)	Speed (m.p.h.)	Time (sec.)	Speed (m.p.h.)	Time (sec.)	Speed (m.p.h.)
1356	20.0	1357	19.6	1358	18.5
1359	17.5	1360	16.5	1361	15.5
1362	14.0	1363	11.0	1364	8.0
1365	5.2	1366	2.5	1367	0.0
1368	0.0	1369	0.0	1370	0.0
1371	0.0	1372	0.0		

The diagrams below show the range of acceptable speed tolerances for typical points. The curve on the left is typical of portions of the speed curve which are increasing or decreasing throughout the 2 second time interval. The curve on the right is typical of portions of the speed curve which include a maximum or minimum value.

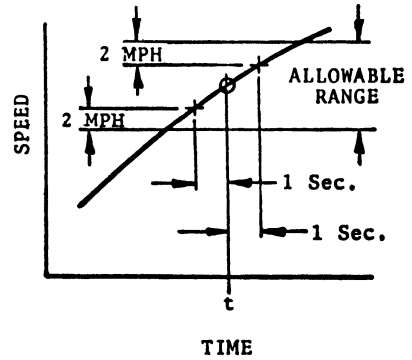

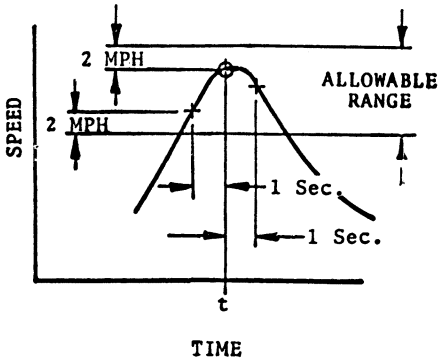

(b) EPA Urban Dynamometer Driving Schedule for Light-Duty Vehicles, Light-Duty Trucks, and Motorcycles with engine displacements equal to or greater than 170 cc (10.4 cu. in.).

SPEED VERSUS TIME SEQUENCE

Time (seconds)	Speed (kilometers per hour)
0	0
1	0
2	0
3	0
4	0
5	0
6	0
7	0
8	0
9	0
10	0
11	0
12	0
13	0
14	0
15	0
16	0
17	0
18	0
19	0
20	0
21	4.8
22	9.5
23	13.8
24	18.5
25	23.0
26	27.2
27	27.8
28	29.1
29	33.3
30	34.9
31	36.0
32	36.2
33	35.6
34	34.6
35	33.6
36	32.8
37	31.9
38	27.4
39	24.0
40	24.0
41	24.5
42	24.9
43	25.7
44	27.5
45	30.7
46	34.0
47	36.5
48	36.9
49	36.5
50	36.4
51	34.3
52	30.6
53	27.5
54	25.4
55	25.4
56	28.5
57	31.9
58	34.8
59	37.3
60	38.9
61	39.6
62	40.1
63	40.2
64	39.6
65	39.4
66	39.8
67	39.9
68	39.8
69	39.6

SPEED VERSUS TIME SEQUENCE—Continued

Time (seconds)	Speed (kilometers per hour)
70	39.6
71	40.4
72	41.2
73	41.4
74	40.9
75	40.1
76	40.2
77	40.9
78	41.8
79	41.8
80	41.4
81	42.0
82	43.0
83	44.3
84	46.0
85	47.2
86	48.0
87	48.4
88	48.9
89	49.4
90	49.4
91	49.1
92	48.9
93	48.8
94	48.9
95	49.6
96	48.9
97	48.1
98	47.5
99	48.0
100	48.8
101	49.4
102	49.7
103	49.9
104	49.7
105	48.9
106	48.0
107	48.1
108	48.6
109	49.4
110	50.2
111	51.2
112	51.8
113	52.1
114	51.8
115	51.0
116	46.0
117	40.7
118	35.4
119	30.1
120	24.8
121	19.5
122	14.2
123	8.9
124	3.5
125	0
126	0
127	0
128	0
129	0
130	0
131	0
132	0
133	0
134	0
135	0
136	0
137	0
138	0
139	0

SPEED VERSUS TIME SEQUENCE—Continued

Time (seconds)	Speed (kilometers per hour)
140	0
141	0
142	0
143	0
144	0
145	0
146	0
147	0
148	0
149	0
150	0
151	0
152	0
153	0
154	0
155	0
156	0
157	0
158	0
159	0
160	0
161	0
162	0
163	0
164	5.3
165	10.6
166	15.9
167	21.2
168	26.6
169	31.9
170	35.7
171	39.1
172	41.5
173	42.5
174	41.4
175	40.4
176	39.8
177	40.2
178	40.6
179	40.9
180	41.5
181	43.8
182	42.6
183	38.6
184	36.5
185	31.2
186	28.5
187	27.7
188	29.1
189	29.9
190	32.2
191	35.7
192	39.4
193	43.9
194	49.1
195	53.9
196	58.3
197	60.0
198	63.2
199	65.2
200	67.8
201	70.0
202	72.6
203	74.0
204	75.3
205	76.4
206	76.4
207	76.1
208	76.0
209	75.6

SPEED VERSUS TIME SEQUENCE—Continued

Time (seconds)	Speed (kilometers per hour)
210	75.6
211	75.6
212	75.6
213	75.6
214	76.0
215	76.3
216	77.1
217	78.1
218	79.0
219	79.7
220	80.5
221	81.4
222	82.1
223	82.9
224	84.0
225	85.6
226	87.1
227	87.9
228	88.4
229	88.5
230	88.4
231	87.9
232	87.9
233	88.2
234	88.7
235	89.3
236	89.6
237	90.3
238	90.6
239	91.1
240	91.2
241	91.2
242	90.9
243	90.9
244	90.9
245	90.9
246	90.9
247	90.9
248	90.8
249	90.3
250	89.8
251	88.7
252	87.9
253	87.2
254	86.9
255	86.4
256	86.3
257	86.7
258	86.9
259	87.1
260	87.1
261	86.6
262	85.9
263	85.3
264	84.7
265	83.8
266	84.3
267	83.7
268	83.5
269	83.2
270	82.9
271	83.0
272	83.4
273	83.8
274	84.5
275	85.3
276	86.1
277	86.9
278	88.4
279	89.2

SPEED VERSUS TIME SEQUENCE—Continued

Time (seconds)	Speed (kilometers per hour)
280	89.5
281	90.1
282	90.1
283	89.8
284	88.8
285	87.7
286	86.3
287	84.5
288	82.9
289	82.9
290	82.9
291	82.2
292	80.6
293	80.5
294	80.6
295	80.5
296	79.8
297	79.7
298	79.7
299	79.7
300	79.0
301	78.2
302	77.4
303	76.0
304	74.2
305	72.4
306	70.5
307	68.6
308	66.8
309	64.9
310	62.0
311	59.5
312	56.6
313	54.4
314	52.3
315	50.7
316	49.2
317	49.1
318	48.3
319	46.7
320	44.3
321	39.9
322	34.6
323	32.3
324	30.7
325	29.8
326	27.4
327	24.9
328	20.1
329	17.4
330	12.9
331	7.6
332	2.3
333	0
334	0
335	0
336	0
337	0
338	0
339	0
340	0
341	0
342	0
343	0
344	0
345	0
346	0
347	1.6
348	6.9
349	12.2

SPEED VERSUS TIME SEQUENCE—Continued

Time (seconds)	Speed (kilometers per hour)
350	17.5
351	22.9
352	27.8
353	32.2
354	36.2
355	38.1
356	40.6
357	42.8
358	45.2
359	48.3
360	49.6
361	50.9
362	51.7
363	52.8
364	54.1
365	55.5
366	55.7
367	56.2
368	56.0
369	55.5
370	55.8
371	57.1
372	57.9
373	57.9
374	57.9
375	57.9
377	57.9
376	57.9
378	58.1
379	58.6
380	58.7
381	58.6
382	57.9
383	56.5
384	54.9
385	53.9
386	50.5
387	46.7
388	41.4
389	37.0
390	32.7
391	28.2
392	23.3
393	19.3
394	14.0
395	8.7
396	3.4
397	0
398	0
399	0
400	0
401	0
402	0
403	4.2
404	9.5
405	14.8
406	20.1
407	25.4
408	30.7
409	36.0
410	40.2
411	41.2
412	44.3
413	46.7
414	48.3
415	48.4
416	48.3
417	47.8
418	47.2
419	46.3

SPEED VERSUS TIME SEQUENCE—Continued

Time (seconds)	Speed (kilometers per hour)
420	45.1
421	40.2
422	34.9
423	29.6
424	24.3
425	19.0
426	13.7
427	8.4
428	3.1
429	0
430	0
431	0
432	0
433	0
434	0
435	0
436	0
437	0
438	0
439	0
440	0
441	0
442	0
443	0
444	0
445	0
446	0
447	0
448	5.3
449	10.6
450	15.9
451	21.2
452	26.6
453	31.9
454	37.2
455	42.5
456	44.7
457	46.8
458	50.7
459	53.1
460	54.1
461	56.0
462	56.5
463	57.3
464	58.1
465	57.9
466	58.1
467	58.3
468	57.9
469	57.5
470	57.9
471	57.9
472	57.3
473	57.1
474	57.0
475	56.6
476	56.6
477	56.6
478	56.6
479	56.6
480	56.6
481	56.3
482	56.5
483	56.6
484	57.1
485	56.6
486	56.3
487	56.3
488	56.3
489	56.0

SPEED VERSUS TIME SEQUENCE—Continued

Time (seconds)	Speed (kilometers per hour)
490	55.7
491	55.5
492	53.9
493	51.5
494	48.4
495	45.1
496	41.0
497	36.2
498	31.9
499	26.6
500	21.2
501	16.6
502	11.6
503	6.4
504	1.6
505	0
506	0
507	0
508	0
509	0
510	0
511	1.9
512	5.6
513	8.9
514	10.5
515	13.7
516	15.4
517	16.9
518	19.2
519	22.5
520	25.7
521	28.5
522	30.6
523	32.3
524	33.8
525	35.4
526	37.0
527	38.3
528	39.4
529	40.1
530	40.2
531	40.2
532	40.2
533	40.2
534	40.2
535	40.2
536	41.2
537	41.5
538	41.8
539	41.2
540	40.6
541	40.2
542	40.2
543	40.2
544	39.3
545	37.2
546	31.9
547	26.6
548	21.2
549	15.9
550	10.6
551	5.3
552	0
553	0
554	0
555	0
556	0
557	0
558	0
559	0

SPEED VERSUS TIME SEQUENCE—Continued

Time (seconds)	Speed (kilometers per hour)
560	0
561	0
562	0
563	0
564	0
565	0
566	0
567	0
568	0
569	5.3
570	10.6
571	15.9
572	20.9
573	23.5
574	25.7
575	27.4
576	27.4
577	27.4
578	28.2
579	28.5
580	28.5
581	28.2
582	27.4
583	27.2
584	26.7
585	27.4
586	27.5
587	27.4
588	26.7
589	26.6
590	26.6
591	26.7
592	27.4
593	28.3
594	29.8
595	30.9
596	32.5
597	33.8
598	34.0
599	34.1
600	34.8
601	35.4
602	36.0
603	36.2
604	36.2
605	36.2
606	36.5
607	38.1
608	40.4
609	41.8
610	42.6
611	43.5
612	42.0
613	36.7
614	31.4
615	26.1
616	20.8
617	15.4
618	10.1
619	4.8
620	0
621	0
622	0
623	0
624	0
625	0
626	0
627	0
628	0
629	0

SPEED VERSUS TIME SEQUENCE—Continued

Time (seconds)	Speed (kilometers per hour)
630	0
631	0
632	0
633	0
634	0
635	0
636	0
637	0
638	0
639	0
640	0
641	0
642	0
643	0
644	0
645	0
646	3.2
647	7.2
648	12.6
649	16.4
650	20.1
651	22.5
652	24.6
653	28.2
654	31.5
655	33.8
656	35.7
657	37.5
658	39.4
659	40.7
660	41.2
661	41.8
662	42.0
663	42.2
664	42.2
665	42.5
666	42.6
667	42.6
668	41.8
669	41.0
670	38.0
671	34.4
672	29.8
673	26.4
674	23.3
675	18.7
676	14.0
677	9.3
678	5.6
679	3.2
680	0
681	0
682	0
683	0
684	0
685	0
686	0
687	0
688	0
689	0
690	0
691	0
692	0
693	0
694	2.3
695	5.3
696	7.1
697	10.5
698	14.8
699	18.2

SPEED VERSUS TIME SEQUENCE—Continued

Time (seconds)	Speed (kilometers per hour)
700	21.7
701	23.5
702	26.4
703	26.9
704	26.6
705	26.6
706	29.3
707	30.9
708	32.3
709	34.6
710	36.2
711	36.2
712	35.6
713	36.5
714	37.5
715	37.8
716	36.2
717	34.8
718	33.0
719	29.0
720	24.1
721	19.3
722	14.5
723	10.0
724	7.2
725	4.8
726	3.4
727	0.8
728	0.8
729	5.1
730	10.5
731	15.4
732	20.1
733	22.5
734	25.7
735	29.0
736	31.5
737	34.6
738	37.2
739	39.4
740	41.0
741	42.6
742	43.6
743	44.4
744	44.9
745	45.5
746	46.0
747	46.0
748	45.5
749	45.4
750	45.1
751	44.3
752	43.1
753	41.0
754	37.8
755	34.6
756	30.6
757	26.6
758	24.0
759	20.1
760	15.1
761	10.0
762	4.8
763	2.4
764	2.4
765	0.8
766	0
767	4.8
768	10.1
769	15.4

SPEED VERSUS TIME SEQUENCE—Continued

Time (seconds)	Speed (kilometers per hour)
770	20.8
771	25.4
772	28.2
773	29.6
774	31.4
775	33.3
776	35.4
777	37.3
778	40.2
779	42.6
780	44.3
781	45.1
782	45.5
783	46.5
784	46.5
785	46.5
786	46.3
787	45.9
788	45.5
789	45.5
790	45.5
791	45.4
792	44.4
793	44.3
794	44.3
795	44.3
796	44.3
797	44.3
798	44.3
799	44.4
800	45.1
801	45.9
802	48.3
803	49.9
804	51.5
805	53.1
806	53.1
807	54.1
808	54.7
809	55.2
810	55.0
811	54.7
812	54.7
813	54.6
814	54.1
815	53.3
816	53.1
817	52.3
818	51.5
819	51.3
820	50.9
821	50.7
822	49.2
823	48.3
824	48.1
825	48.1
826	48.1
827	48.1
828	47.6
829	47.5
830	47.5
831	47.2
832	46.5
833	45.4
834	44.6
835	43.5
836	41.0
837	38.1
838	35.4
839	33.0

SPEED VERSUS TIME SEQUENCE—Continued

Time (seconds)	Speed (kilometers per hour)
840	30.9
841	30.9
842	32.3
843	33.6
844	34.4
845	35.4
846	36.4
847	37.3
848	38.6
849	40.2
850	41.8
851	42.8
852	42.8
853	43.1
854	43.5
855	43.8
856	44.7
857	45.2
858	46.3
859	46.5
860	46.7
861	46.8
862	46.7
863	45.2
864	44.3
865	43.5
866	41.5
867	40.2
868	39.4
869	39.9
870	40.4
871	41.0
872	41.4
873	42.2
874	43.3
875	44.3
876	44.7
877	45.7
878	46.7
879	47.0
880	46.8
881	46.7
882	46.5
883	45.9
884	45.2
885	45.1
886	45.1
887	44.4
888	43.8
889	42.8
890	43.5
891	44.3
892	44.7
893	45.1
894	44.7
895	45.1
896	45.1
897	45.1
898	44.6
899	44.1
900	43.3
901	42.8
902	42.6
903	42.6
904	42.6
905	42.3
906	42.2
907	42.2
908	41.7
909	41.2

SPEED VERSUS TIME SEQUENCE—Continued

Time (seconds)	Speed (kilometers per hour)
910	41.2
911	41.7
912	41.5
913	41.0
914	39.6
915	37.8
916	35.7
917	34.8
918	34.8
919	34.9
920	36.4
921	37.7
922	38.6
923	38.9
924	39.3
925	40.1
926	40.4
927	40.6
928	40.7
929	41.0
930	40.6
931	40.2
932	40.2
933	40.2
934	39.8
935	39.4
936	39.1
937	39.1
938	39.4
939	40.2
940	40.2
941	39.6
942	39.6
943	38.8
944	39.4
945	40.4
946	41.2
947	40.4
948	38.6
949	35.4
950	32.3
951	27.2
952	21.9
953	16.6
954	11.3
955	6.0
956	0.6
957	0
958	0
959	0
960	3.2
961	8.5
962	13.8
963	19.2
964	24.5
965	28.2
966	29.9
967	32.2
968	34.0
969	35.4
970	37.0
971	39.4
972	42.3
973	44.3
974	45.2
975	45.7
976	45.9
977	45.9
978	45.9
979	44.6

SPEED VERSUS TIME SEQUENCE—Continued

Time (seconds)	Speed (kilometers per hour)
980	44.3
981	43.8
982	43.1
983	42.6
984	41.8
985	41.4
986	40.6
987	38.6
988	35.4
989	34.6
990	34.6
991	35.1
992	36.2
993	37.0
994	36.7
995	36.7
996	37.0
997	36.5
998	36.5
999	36.5
1,000	37.8
1,001	38.6
1,002	39.6
1,003	39.9
1,004	40.4
1,005	41.0
1,006	41.2
1,007	41.0
1,008	40.2
1,009	38.8
1,010	38.1
1,011	37.3
1,012	36.9
1,013	36.2
1,014	35.4
1,015	34.8
1,016	33.0
1,017	28.2
1,018	22.9
1,019	17.5
1,020	12.2
1,021	6.9
1,022	1.6
1,023	0
1,024	0
1,025	0
1,026	0
1,027	0
1,028	0
1,029	0
1,030	0
1,031	0
1,032	0
1,033	0
1,034	0
1,035	0
1,036	0
1,037	0
1,038	0
1,039	0
1,040	0
1,041	0
1,042	0
1,043	0
1,044	0
1,045	0
1,046	0
1,047	0
1,048	0
1,049	0

SPEED VERSUS TIME SEQUENCE—Continued

Time (seconds)	Speed (kilometers per hour)
1,050	0
1,051	0
1,052	0
1,053	1.9
1,054	6.4
1,055	11.7
1,056	17.1
1,057	22.4
1,058	27.4
1,059	29.8
1,060	32.2
1,061	35.1
1,062	37.0
1,063	38.6
1,064	39.9
1,065	41.2
1,066	42.6
1,067	43.1
1,068	44.1
1,069	44.9
1,070	45.5
1,071	45.1
1,072	44.3
1,073	43.5
1,074	43.5
1,075	42.3
1,076	39.4
1,077	36.2
1,078	34.6
1,079	33.2
1,080	29.0
1,081	24.1
1,082	19.8
1,083	17.9
1,084	17.1
1,085	16.1
1,086	15.3
1,087	14.6
1,088	14.0
1,089	13.8
1,090	14.2
1,091	14.5
1,092	14.0
1,093	13.8
1,094	12.9
1,095	11.3
1,096	8.0
1,097	6.8
1,098	4.2
1,099	1.6
1,100	0
1,101	0.2
1,102	1.0
1,103	2.6
1,104	5.8
1,105	11.1
1,106	16.1
1,107	20.6
1,108	22.5
1,109	23.3
1,110	25.7
1,111	29.1
1,112	32.2
1,113	33.8
1,114	34.1
1,115	34.3
1,116	34.4
1,117	34.9
1,118	36.2
1,119	37.0

SPEED VERSUS TIME SEQUENCE—Continued

Time (seconds)	Speed (kilometers per hour)
1,120	38.3
1,121	39.4
1,122	40.2
1,123	40.1
1,124	39.9
1,125	40.2
1,126	40.9
1,127	41.5
1,128	41.8
1,129	42.5
1,130	42.8
1,131	43.3
1,132	43.5
1,133	43.5
1,134	43.5
1,135	43.3
1,136	43.1
1,137	43.1
1,138	42.6
1,139	42.5
1,140	41.8
1,141	41.0
1,142	39.6
1,143	37.8
1,144	34.6
1,145	32.2
1,146	28.2
1,147	25.7
1,148	22.5
1,149	17.2
1,150	11.9
1,151	6.6
1,152	1.3
1,153	0
1,154	0
1,155	0
1,156	0
1,157	0
1,158	0
1,159	0
1,160	0
1,161	0
1,162	0
1,163	0
1,164	0
1,165	0
1,166	0
1,167	0
1,168	0
1,169	3.4
1,170	8.7
1,171	14.0
1,172	19.3
1,173	24.6
1,174	29.9
1,175	34.0
1,176	37.0
1,177	37.8
1,178	37.0
1,179	36.2
1,180	32.2
1,181	26.9
1,182	21.6
1,183	16.3
1,184	10.9
1,185	5.6
1,186	0.3
1,187	0
1,188	0
1,189	0

SPEED VERSUS TIME SEQUENCE—Continued

Time (seconds)	Speed (kilometers per hour)
1,190	0
1,191	0
1,192	0
1,193	0
1,194	0
1,195	0
1,196	0
1,197	0.3
1,198	2.4
1,199	5.6
1,200	10.5
1,201	15.8
1,202	19.3
1,203	20.8
1,204	20.9
1,205	20.3
1,206	20.6
1,207	21.1
1,208	21.1
1,209	22.5
1,210	24.9
1,211	27.4
1,212	29.9
1,213	31.7
1,214	33.8
1,215	34.6
1,216	35.1
1,217	35.1
1,218	34.6
1,219	34.1
1,220	34.6
1,221	35.1
1,222	35.4
1,223	35.2
1,224	34.9
1,225	34.6
1,226	34.6
1,227	34.4
1,228	32.3
1,229	31.4
1,230	30.9
1,231	31.5
1,232	31.9
1,233	32.2
1,234	31.4
1,235	28.2
1,236	24.9
1,237	20.9
1,238	16.1
1,239	12.9
1,240	9.7
1,241	6.4
1,242	4.0
1,243	1.1
1,244	0
1,245	0
1,246	0
1,247	0
1,248	0
1,249	0
1,250	0
1,251	0
1,252	1.6
1,253	1.6
1,254	1.6
1,255	1.6
1,256	1.6
1,257	2.6
1,258	4.8
1,259	6.4

SPEED VERSUS TIME SEQUENCE—Continued

Time (seconds)	Speed (kilometers per hour)
1,260	8.0
1,261	10.1
1,262	12.9
1,263	16.1
1,264	16.9
1,265	15.3
1,266	13.7
1,267	12.2
1,268	14.2
1,269	17.7
1,270	22.5
1,271	27.4
1,272	31.4
1,273	33.8
1,274	35.1
1,275	35.7
1,276	37.0
1,277	38.0
1,278	38.8
1,279	39.4
1,280	39.4
1,281	38.6
1,282	37.8
1,283	37.8
1,284	37.8
1,285	37.8
1,286	37.8
1,287	37.8
1,288	38.6
1,289	38.8
1,290	39.4
1,291	39.8
1,292	40.2
1,293	40.9
1,294	41.2
1,295	41.4
1,296	41.8
1,297	42.2
1,298	43.5
1,299	44.7
1,300	45.5
1,301	46.7
1,302	46.8
1,303	46.7
1,304	45.1
1,305	39.8
1,306	34.4
1,307	29.1
1,308	23.8
1,309	18.5
1,310	13.2
1,311	7.9
1,312	2.6
1,313	0
1,314	0
1,315	0
1,316	0
1,317	0
1,318	0
1,319	0
1,320	0
1,321	0
1,322	0
1,323	0
1,324	0
1,325	0
1,326	0
1,327	0
1,328	0
1,329	0

SPEED VERSUS TIME SEQUENCE—Continued

Time (seconds)	Speed (kilometers per hour)
1,330	0
1,331	0
1,332	0
1,333	0
1,334	0
1,335	0
1,336	0
1,337	0
1,338	2.4
1,339	7.7
1,340	13.0
1,341	18.3
1,342	21.2
1,343	24.3
1,344	27.0
1,345	29.5
1,346	31.4
1,347	32.7
1,348	34.3
1,349	35.2
1,350	35.6
1,351	36.0
1,352	35.4
1,353	34.8
1,354	34.0
1,355	33.0
1,356	32.2
1,357	31.5
1,358	29.8
1,359	28.2
1,360	26.6
1,361	24.9
1,362	22.5
1,363	17.7
1,364	12.9
1,365	8.4
1,366	4.0
1,367	0
1,368	0
1,369	0
1,370	0
1,371	0

(c) EPA Urban Dynamometer Driving Schedule for motorcycles with engine displacements less than 170 cc (10.4 cu. in.).

SPEED VERSUS TIME SEQUENCE

Time (seconds)	Speed (kilometers per hour)
1	0
2	0
3	0
4	0
5	0
6	0
7	0
8	0
9	0
10	0
11	0
12	0
13	0
14	0
15	0
16	0
17	0

SPEED VERSUS TIME SEQUENCE—Continued

Time (seconds)	Speed (kilometers per hour)
18	0
19	0
20	0
21	4.8
22	9.5
23	13.8
24	18.5
25	23.0
26	27.2
27	27.8
28	29.1
29	33.3
30	34.9
31	36.0
32	36.2
33	35.6
34	34.6
35	33.6
36	32.8
37	31.9
38	27.4
39	24.0
40	24.0
41	24.5
42	24.9
43	25.7
44	27.5
45	30.7
46	34.0
47	36.5
48	36.9
49	36.5
50	36.4
51	34.3
52	30.6
53	27.5
54	25.4
55	25.4
56	28.6
57	31.9
58	34.8
59	37.3
60	38.9
61	39.6
62	40.1
63	40.2
64	39.6
65	39.4
66	39.8
67	39.9
68	39.8
69	39.6
70	39.6
71	40.4
72	41.2
73	41.4
74	40.9
75	40.1
76	40.2
77	40.9
78	41.8
79	41.8
80	41.4
81	42.0
82	43.0
83	44.3
84	46.0
85	47.2
86	48.0
87	48.4

SPEED VERSUS TIME SEQUENCE—Continued

Time (seconds)	Speed (kilometers per hour)
88	48.9
89	49.4
90	49.4
91	49.1
92	48.9
93	48.8
94	48.9
95	49.6
96	48.9
97	48.1
98	47.5
99	48.0
100	48.8
101	49.4
102	49.7
103	49.9
104	49.7
105	48.9
106	48.0
107	48.1
108	48.6
109	49.4
110	50.2
111	51.2
112	51.8
113	52.1
114	51.8
115	51.0
116	46.0
117	40.7
118	35.4
119	30.1
120	24.8
121	19.5
122	14.2
123	8.9
124	3.5
125	0
126	0
127	0
128	0
129	0
130	0
131	0
132	0
133	0
134	0
135	0
136	0
137	0
138	0
139	0
140	0
141	0
142	0
143	0
144	0
145	0
146	0
147	0
148	0
149	0
150	0
151	0
152	0
153	0
154	0
155	0
156	0
157	0

SPEED VERSUS TIME SEQUENCE—Continued

Time (seconds)	Speed (kilometers per hour)
158	0
159	0
160	0
161	0
162	0
163	0
164	3.4
165	6.8
166	10.3
167	13.7
168	17.1
169	20.5
170	23.0
171	25.2
172	26.7
173	27.4
174	26.6
175	26.0
176	25.6
177	25.9
178	26.1
179	26.3
180	26.7
181	28.2
182	27.5
183	24.9
184	23.5
185	20.1
186	18.3
187	17.8
188	18.8
189	19.3
190	20.7
191	23.0
192	25.4
193	28.3
194	31.6
195	34.7
196	37.5
197	38.6
198	40.7
199	42.0
200	43.6
201	45.1
202	46.7
203	47.7
204	48.5
205	49.2
206	49.2
207	49.0
208	48.9
209	48.7
210	48.7
211	48.7
212	48.7
213	48.7
214	48.9
215	49.1
216	49.6
217	50.2
218	50.9
219	51.3
220	51.8
221	52.4
222	52.8
223	53.4
224	54.1
225	55.1
226	56.0
227	56.6

SPEED VERSUS TIME SEQUENCE—Continued

Time (seconds)	Speed (kilometers per hour)
228	56.9
229	57.0
230	56.9
231	56.6
232	56.6
233	56.8
234	57.1
235	57.5
236	57.7
237	58.1
238	58.3
239	58.6
240	58.7
241	58.7
242	58.5
243	58.5
244	58.5
245	58.5
246	58.5
247	58.5
248	58.4
249	58.1
250	57.8
251	57.1
252	56.6
253	56.2
254	55.9
255	55.6
256	55.5
257	55.8
258	55.9
259	56.0
260	56.0
261	55.7
262	55.3
263	54.9
264	54.5
265	54.0
266	54.3
267	53.9
268	53.8
269	53.6
270	53.4
271	53.5
272	53.7
273	54.0
274	54.4
275	54.9
276	55.4
277	55.9
278	56.9
279	57.4
280	57.6
281	58.0
282	58.0
283	57.8
284	57.2
285	56.5
286	55.5
287	54.4
288	53.4
289	53.4
290	53.4
291	52.9
292	51.9
293	51.8
294	51.9
295	51.8
296	51.4
297	51.3

SPEED VERSUS TIME SEQUENCE—Continued

Time (seconds)	Speed (kilometers per hour)
298	51.3
299	51.3
300	50.9
301	50.3
302	49.8
303	48.9
304	47.8
305	46.6
306	45.4
307	44.1
308	43.0
309	41.8
310	39.9
311	38.3
312	36.5
313	35.0
314	33.7
315	32.6
316	31.7
317	31.6
318	31.1
319	30.0
320	28.5
321	25.7
322	22.3
323	20.8
324	19.8
325	19.2
326	17.6
327	16.1
328	12.9
329	11.2
330	8.3
331	4.9
332	1.5
333	0
334	0
335	0
336	0
337	0
338	0
339	0
340	0
341	0
342	0
343	0
344	0
345	0
346	0
347	1.6
348	6.9
349	12.2
350	17.5
351	22.9
352	27.8
353	32.2
354	36.2
355	38.1
356	40.6
357	42.8
358	45.2
359	48.3
360	49.6
361	50.9
362	51.7
363	52.8
364	54.1
365	55.5
366	55.7
367	56.2

SPEED VERSUS TIME SEQUENCE—Continued

Time (seconds)	Speed (kilometers per hour)
368	56.0
369	55.5
370	55.8
371	57.1
372	57.9
373	57.9
374	57.9
375	57.9
376	57.9
377	57.9
378	58.1
379	58.6
380	58.7
381	58.6
382	57.9
383	56.5
384	54.9
385	53.9
386	50.5
387	46.7
388	41.4
389	37.0
390	32.7
391	26.2
392	23.3
393	19.3
394	14.0
395	8.7
396	3.4
397	0
398	0
399	0
400	0
401	0
402	0
403	4.2
404	9.5
405	14.8
406	20.1
407	25.4
408	30.7
409	36.0
410	40.2
411	41.2
412	44.3
413	46.7
414	48.3
415	48.4
416	48.3
417	47.8
418	47.2
419	46.3
420	45.1
421	40.2
422	34.9
423	29.6
424	24.3
425	19.0
426	13.7
427	8.4
428	3.1
429	0
430	0
431	0
432	0
433	0
434	0
435	0
436	0
437	0

SPEED VERSUS TIME SEQUENCE—Continued

Time (seconds)	Speed (kilometers per hour)
438	0
439	0
440	0
441	0
442	0
443	0
444	0
445	0
446	0
447	0
448	5.3
449	10.6
450	15.9
451	21.2
452	26.6
453	31.9
454	37.2
455	42.5
456	44.7
457	46.8
458	50.7
459	53.1
460	54.1
461	56.0
462	56.5
463	57.3
464	58.1
465	57.9
466	58.1
467	58.3
468	57.9
469	57.5
470	57.9
471	57.9
472	57.3
473	57.1
474	57.0
475	56.6
476	56.6
477	56.6
478	56.6
479	56.6
480	56.6
481	56.3
482	56.5
483	56.6
484	57.1
485	56.6
486	56.3
487	56.3
488	56.3
489	56.0
490	55.7
491	55.5
492	53.9
493	51.5
494	48.4
495	45.1
496	41.0
497	36.2
498	31.9
499	26.6
500	21.2
501	16.6
502	11.6
503	6.4
504	1.6
505	0
506	0
507	0

SPEED VERSUS TIME SEQUENCE—Continued

Time (seconds)	Speed (kilometers per hour)
508	0
509	0
510	0
511	1.9
512	5.6
513	8.9
514	10.5
515	13.7
516	15.4
517	16.9
518	19.2
519	22.5
520	25.7
521	28.5
522	30.6
523	32.3
524	33.8
525	35.4
526	37.0
527	38.3
528	39.4
529	40.1
530	40.2
531	40.2
532	40.2
533	40.2
534	40.2
535	40.2
536	41.2
537	41.5
538	41.8
539	41.2
540	40.6
541	40.2
542	40.2
543	40.2
544	39.3
545	37.2
546	31.9
547	26.6
548	21.2
549	15.9
550	10.6
551	5.2
552	0
553	0
554	0
555	0
556	0
557	0
558	0
559	0
560	0
561	0
562	0
563	0
564	0
565	0
566	0
567	0
568	0
569	5.3
570	10.6
571	15.9
572	20.9
573	23.5
574	25.7
575	27.4
576	27.4
577	27.4

SPEED VERSUS TIME SEQUENCE—Continued

Time (seconds)	Speed (kilometers per hour)
578	28.2
579	28.5
580	28.5
581	28.2
582	27.4
583	27.2
584	26.7
585	27.4
586	27.5
587	27.4
588	26.7
589	26.6
590	26.6
591	26.7
592	27.4
593	28.3
594	29.8
595	30.9
596	32.5
597	33.8
598	34.0
599	34.1
600	34.8
601	35.4
602	36.0
603	36.2
604	36.2
605	36.2
606	36.5
607	38.1
608	40.4
609	41.8
610	42.6
611	43.5
612	42.0
613	36.7
614	31.4
615	26.1
616	20.8
617	15.4
618	10.1
619	4.8
620	0
621	0
622	0
623	0
624	0
625	0
626	0
627	0
628	0
629	0
630	0
631	0
632	0
633	0
634	0
635	0
636	0
637	0
638	0
639	0
640	0
641	0
642	0
643	0
644	0
645	0
646	3.2
647	7.2

SPEED VERSUS TIME SEQUENCE—Continued

Time (seconds)	Speed (kilometers per hour)
648	12.6
649	16.4
650	20.1
651	22.5
652	24.6
653	28.2
654	31.5
655	33.8
656	35.7
657	37.5
658	39.4
659	40.7
660	41.2
661	41.8
662	42.0
663	42.2
664	42.2
665	42.5
666	42.6
667	42.6
668	41.8
669	41.0
670	38.0
671	34.4
672	29.8
673	26.4
674	23.3
675	18.7
676	14.0
677	9.3
678	5.6
679	3.2
680	0
681	0
682	0
683	0
684	0
685	0
686	0
687	0
688	0
689	0
690	0
691	0
692	0
693	0
694	2.3
695	5.3
696	7.1
697	10.5
698	14.8
699	18.2
700	21.7
701	23.5
702	26.4
703	26.9
704	26.6
705	26.6
706	29.3
707	30.9
708	32.3
709	34.6
710	36.2
711	36.2
712	35.6
713	36.5
714	37.5
715	37.8
716	36.2
717	34.8

SPEED VERSUS TIME SEQUENCE—Continued

Time (seconds)	Speed (kilometers per hour)
718	33.0
719	29.0
720	24.1
721	19.3
722	14.5
723	10.0
724	7.2
725	4.8
726	3.4
727	0.8
728	0.8
729	5.1
730	10.5
731	15.4
732	20.1
733	22.5
734	25.7
735	29.0
736	31.5
737	34.6
738	37.2
739	39.4
740	41.0
741	42.6
742	43.6
743	44.4
744	44.9
745	45.5
746	46.0
747	46.0
748	45.5
749	45.4
750	45.1
751	44.3
752	43.1
753	41.0
754	37.8
755	34.6
756	30.6
757	26.6
758	24.0
759	20.1
760	15.1
761	10.0
762	4.8
763	2.4
764	2.4
765	0.8
766	0
767	4.8
768	10.1
769	15.4
770	20.8
771	25.4
772	28.2
773	29.6
774	31.4
775	33.3
776	35.4
777	37.3
778	40.2
779	42.6
780	44.3
781	45.1
782	45.5
783	46.5
784	46.5
785	46.5
786	46.3
787	45.9

SPEED VERSUS TIME SEQUENCE—Continued

Time (seconds)	Speed (kilometers per hour)
788	45.5
789	45.5
790	45.5
791	45.4
792	44.4
793	44.3
794	44.3
795	44.3
796	44.3
797	44.3
798	44.3
799	44.4
800	45.1
801	45.9
802	48.3
803	49.9
804	51.5
805	53.1
806	53.1
807	54.1
808	54.7
809	55.2
810	55.0
811	54.7
812	54.7
813	54.6
814	54.1
815	53.3
816	53.1
817	52.3
818	51.5
819	51.3
820	50.9
821	50.7
822	49.2
823	48.3
824	48.1
825	48.1
826	48.1
827	48.1
828	47.6
829	47.5
830	47.5
831	47.2
832	46.5
833	45.4
834	44.6
835	43.5
836	41.0
837	38.1
838	35.4
839	33.0
840	30.9
841	30.9
842	32.3
843	33.6
844	34.4
845	35.4
846	36.4
847	37.3
848	38.6
849	40.2
850	41.8
851	42.8
852	42.8
853	43.1
854	43.5
855	43.8
856	44.7
857	45.2

SPEED VERSUS TIME SEQUENCE—Continued

Time (seconds)	Speed (kilometers per hour)
858	46.3
859	46.5
860	46.7
861	46.8
862	46.7
863	45.2
864	44.3
865	43.5
866	41.5
867	40.2
868	39.4
869	39.9
870	40.4
871	41.0
872	41.4
873	42.2
874	43.3
875	44.3
876	44.7
877	45.7
878	46.7
879	47.0
880	46.8
881	46.7
882	46.5
883	45.9
884	45.2
885	45.1
886	45.1
887	44.4
888	43.8
889	42.8
890	43.5
891	44.3
892	44.7
893	45.1
894	44.7
895	45.1
896	45.1
897	45.1
898	44.6
899	44.1
900	43.3
901	42.8
902	42.6
903	42.6
904	42.6
905	42.3
906	42.2
907	42.2
908	41.7
909	41.2
910	41.2
911	41.7
912	41.5
913	41.0
914	39.6
915	37.8
916	35.7
917	34.8
918	34.8
919	34.9
920	36.4
921	37.7
922	38.6
923	38.9
924	39.3
925	40.1
926	40.4
927	40.6

SPEED VERSUS TIME SEQUENCE—Continued

Time (seconds)	Speed (kilometers per hour)
928	40.7
929	41.0
930	40.6
931	40.2
932	40.2
933	40.2
934	39.8
935	39.4
936	39.1
937	39.1
938	39.4
939	40.2
940	40.2
941	39.6
942	39.6
943	38.8
944	39.4
945	40.4
946	41.2
947	40.4
948	38.6
949	35.4
950	32.3
951	27.2
952	21.9
953	16.6
954	11.3
955	6.0
956	0.6
957	0
958	0
959	0
960	3.2
961	8.5
962	13.8
963	19.2
964	24.5
965	28.2
966	29.9
967	32.2
968	34.0
969	35.4
970	37.0
971	39.4
972	42.3
973	44.3
974	45.2
975	45.7
976	45.9
977	45.9
978	45.9
979	44.6
980	44.3
981	43.8
982	43.1
983	42.6
984	41.8
985	41.4
986	40.6
987	38.6
988	35.4
989	34.6
990	34.6
991	35.1
992	36.2
993	37.0
994	36.7
995	36.7
996	37.0
997	36.5

SPEED VERSUS TIME SEQUENCE—Continued

Time (seconds)	Speed (kilometers per hour)
998	36.5
999	36.5
1,000	37.8
1,001	38.6
1,002	39.6
1,003	39.9
1,004	40.4
1,005	41.0
1,006	41.2
1,007	41.0
1,008	40.2
1,009	38.8
1,010	38.1
1,011	37.3
1,012	36.9
1,013	36.2
1,014	35.4
1,015	34.8
1,016	33.0
1,017	28.2
1,018	22.9
1,019	17.5
1,020	12.2
1,021	6.9
1,022	1.6
1,023	0
1,024	0
1,025	0
1,026	0
1,027	0
1,028	0
1,029	0
1,030	0
1,031	0
1,032	0
1,033	0
1,034	0
1,035	0
1,036	0
1,037	0
1,038	0
1,039	0
1,040	0
1,041	0
1,042	0
1,043	0
1,044	0
1,045	0
1,046	0
1,047	0
1,048	0
1,049	0
1,050	0
1,051	0
1,052	0
1,053	1.9
1,054	6.4
1,055	11.7
1,056	17.1
1,057	22.4
1,058	27.4
1,059	29.8
1,060	32.2
1,061	35.1
1,062	37.0
1,063	38.6
1,064	39.9
1,065	41.2
1,066	42.6
1,067	43.1

SPEED VERSUS TIME SEQUENCE—Continued

Time (seconds)	Speed (kilometers per hour)
1,068	44.1
1,069	44.9
1,070	45.5
1,071	45.1
1,072	44.3
1,073	43.5
1,074	43.5
1,075	42.3
1,076	39.4
1,077	36.2
1,078	34.6
1,079	33.2
1,080	29.0
1,081	24.1
1,082	19.8
1,083	17.9
1,084	17.1
1,085	16.1
1,086	15.3
1,087	14.6
1,088	14.0
1,089	13.8
1,090	14.2
1,091	14.5
1,092	14.0
1,093	13.8
1,094	12.9
1,095	11.3
1,096	8.0
1,097	6.8
1,098	4.2
1,099	1.6
1,100	0.9
1,101	0.2
1,102	1.0
1,103	2.6
1,104	5.8
1,105	11.1
1,106	16.1
1,107	20.6
1,108	22.5
1,109	23.3
1,110	25.7
1,111	29.1
1,112	32.2
1,113	33.8
1,114	34.1
1,115	34.3
1,116	34.4
1,117	34.9
1,118	36.2
1,119	37.0
1,120	38.3
1,121	39.4
1,122	40.2
1,123	40.1
1,124	39.9
1,125	40.2
1,126	40.9
1,127	41.5
1,128	41.8
1,129	42.5
1,130	42.8
1,131	43.3
1,132	43.5
1,133	43.5
1,134	43.5
1,135	43.3
1,136	43.1
1,137	43.1

SPEED VERSUS TIME SEQUENCE—Continued

Time (seconds)	Speed (kilometers per hour)
1,138	42.6
1,139	42.5
1,140	41.8
1,141	41.0
1,142	39.6
1,143	37.8
1,144	34.6
1,145	32.2
1,146	28.2
1,147	25.7
1,148	22.5
1,149	17.2
1,150	11.9
1,151	6.6
1,152	1.3
1,153	0
1,154	0
1,155	0
1,156	0
1,157	0
1,158	0
1,159	0
1,160	0
1,161	0
1,162	0
1,163	0
1,164	0
1,165	0
1,166	0
1,167	0
1,168	0
1,169	3.4
1,170	8.7
1,171	14.0
1,172	19.3
1,173	24.6
1,174	29.9
1,175	34.0
1,176	37.0
1,177	37.8
1,178	37.0
1,179	36.2
1,180	32.2
1,181	26.9
1,182	21.6
1,183	16.3
1,184	10.9
1,185	5.6
1,186	0.3
1,187	0
1,188	0
1,189	0
1,190	0
1,191	0
1,192	0
1,193	0.0
1,194	0.0
1,195	0.0
1,196	0.0
1,197	0.3
1,198	2.4
1,199	5.6
1,200	10.5
1,201	15.8
1,202	19.3
1,203	20.8
1,204	20.9
1,205	20.3
1,206	20.6
1,207	21.1

SPEED VERSUS TIME SEQUENCE—Continued

Time (seconds)	Speed (kilometers per hour)
1,208	21.1
1,209	22.5
1,210	24.9
1,211	27.4
1,212	29.9
1,213	31.7
1,214	33.8
1,215	34.6
1,216	35.1
1,217	35.1
1,218	34.6
1,219	34.1
1,220	34.6
1,221	35.1
1,222	35.4
1,223	35.2
1,224	34.9
1,225	34.6
1,226	34.6
1,227	34.4
1,228	32.3
1,229	31.4
1,230	30.9
1,231	31.5
1,232	31.9
1,233	32.2
1,234	31.4
1,235	28.2
1,236	24.9
1,237	20.9
1,238	16.1
1,239	12.9
1.240	9.7
1,241	6.4
1,242	4.0
1,243	1.1
1,244	0
1,245	0
1,246	0
1,247	0
1,248	0
1,249	0
1,250	0
1,251	0
1,252	1.6
1,253	1.6
1,254	1.6
1,255	1.6
1,256	1.6
1,257	2.6
1,258	4.8
1,259	6.4
1,260	8.0
1,261	10.1
1,262	12.9
1,263	16.1
1,264	16.9
1,265	15.3
1,266	13.7
1,267	12.2
1,268	14.2
1,269	17.7
1,270	22.5
1,271	27.4
1,272	31.4
1,273	33.8
1,274	35.1
1,275	35.7
1,276	37.0
1,277	38.0

SPEED VERSUS TIME SEQUENCE—Continued

Time (seconds)	Speed (kilometers per hour)
1,278	38.8
1,279	39.4
1,280	39.4
1,281	38.6
1,282	37.8
1,283	37.8
1,284	37.8
1,285	37.8
1,286	37.8
1,287	37.8
1,288	38.6
1,289	38.8
1,290	39.4
1,291	39.8
1,292	40.2
1,293	40.9
1,294	41.2
1,295	41.4
1,296	41.8
1,297	42.2
1,298	43.5
1,299	44.7
1,300	45.5
1,301	46.7
1,302	46.8
1,303	46.7
1,304	45.1
1,305	39.8
1,306	34.4
1,307	29.1
1,308	23.8
1,309	18.5
1,310	13.2
1,311	7.9
1,312	2.6
1,313	0
1,314	0
1,315	0
1,316	0
1,317	0
1,318	0
1,319	0
1,320	0
1,321	0
1,322	0
1,323	0
1,324	0
1,325	0
1,326	0
1,327	0
1,328	0
1,329	0
1,330	0
1,331	0
1,332	0
1,333	0
1,334	0
1,335	0
1,336	0
1,337	0
1,338	2.4
1,339	7.7
1,340	13.0
1,341	16.3
1,342	21.2
1,343	24.3
1,344	27.0
1,345	29.5
1,346	31.4
1,347	32.7

SPEED VERSUS TIME SEQUENCE—Continued

Time (seconds)	Speed (kilometers per hour)
1,348	34.3
1,349	35.2
1,350	35.6
1,351	36.0
1,352	35.4
1,353	34.8
1,354	34.0
1,355	33.0
1,356	32.2
1,357	31.8
1,358	29.8
1,359	28.2
1,360	26.6
1,361	24.9
1,362	22.5
1,363	17.7
1,364	12.9
1,365	8.4
1,366	4.0
1,367	0
1,368	0
1,369	0
1,370	0
1,371	0

(d) EPA Urban Dynamometer Driving Schedule for Heavy-Duty Vehicles.

SPEED VERSUS TIME SEQUENCE

Record (sec)	Speed (mph)
0	0.0
1	0.0
2	0.0
3	0.0
4	0.0
5	0.0
6	0.0
7	0.0
8	0.0
9	0.0
10	0.0
11	0.0
12	0.0
13	0.0
14	0.0
15	0.0
16	0.0
17	0.0
18	0.0
19	0.0
20	0.0
21	0.0
22	0.0
23	0.0
24	0.0
25	0.19
26	1.00
27	1.51
28	2.66
29	4.64
30	6.96
31	8.86
32	7.71
33	7.45
34	9.22
35	10.00
36	9.08

SPEED VERSUS TIME SEQUENCE—Continued

Record (sec)	Speed (mph)
37	10.08
38	11.24
39	12.79
40	14.00
41	12.58
42	12.87
43	13.00
44	13.00
45	13.68
46	15.00
47	15.00
48	13.37
49	12.08
50	12.26
51	14.29
52	14.56
53	15.20
54	16.76
55	17.00
56	17.00
57	17.23
58	18.77
59	20.54
60	19.60
61	18.14
62	17.98
63	17.00
64	16.34
65	15.00
66	15.00
67	15.00
68	15.96
69	12.35
70	15.28
71	14.27
72	12.59
73	12.25
74	9.28
75	8.00
76	8.00
77	8.38
78	9.53
79	10.69
80	11.00
81	9.00
82	9.00
83	9.32
84	10.00
85	9.36
86	9.00
87	9.95
88	14.33
89	17.53
90	19.42
91	20.00
92	20.74
93	21.00
94	21.11
95	23.84
96	27.00
97	27.00
98	29.05
99	32.52
100	31.01
101	31.00
102	31.62
103	33.00
104	32.37
105	30.43
106	30.00
107	30.00

SPEED VERSUS TIME SEQUENCE—Continued

Record (sec)	Speed (mph)
108	30.51
109	32.41
110	33.00
111	32.27
112	32.00
113	31.04
114	32.20
115	33.36
116	34.00
117	34.00
118	34.00
119	33.01
120	31.86
121	30.10
122	26.17
123	23.39
124	21.46
125	17.28
126	15.83
127	13.76
128	12.60
129	10.33
130	8.28
131	5.38
132	2.91
133	0.0
134	0.0
135	0.0
136	0.0
137	0.0
138	0.0
139	0.0
140	0.0
141	0.0
142	0.0
143	0.0
144	0.0
145	0.0
146	0.0
147	0.0
148	0.0
149	0.0
150	0.0
151	0.0
152	0.0
153	0.0
154	0.0
155	0.0
156	0.0
157	0.0
158	0.0
159	0.0
160	0.0
161	0.0
162	0.0
163	0.0
164	0.0
165	0.0
166	0.0
167	0.0
168	0.0
169	0.0
170	0.0
171	0.0
172	0.0
173	0.0
174	0.51
175	0.33
176	0.0
177	0.0
178	0.0

SPEED VERSUS TIME SEQUENCE—Continued

Record (sec)	Speed (mph)
179	0.0
180	0.0
181	0.0
182	0.0
183	0.0
184	0.0
185	0.0
186	0.0
187	0.0
188	0.0
189	0.0
190	0.0
191	0.0
192	0.0
193	0.0
194	0.0
195	0.0
196	0.0
197	0.13
198	0.71
199	0.0
200	0.0
201	0.0
202	0.0
203	4.15
204	6.00
205	6.00
206	6.00
207	5.30
208	4.14
209	1.96
210	0.0
211	0.0
212	0.0
213	0.0
214	0.0
215	0.0
216	0.0
217	0.0
218	0.0
219	0.0
220	0.0
221	0.0
222	0.0
223	0.0
224	0.0
225	0.0
226	0.0
227	0.0
228	0.0
229	0.0
230	0.0
231	0.48
232	1.64
233	0.41
234	0.0
235	0.0
236	0.0
237	0.0
238	0.0
239	0.0
240	0.0
241	0.0
242	0.0
243	0.0
244	0.0
245	0.0
246	0.0
247	0.0
248	0.0
249	0.0

SPEED VERSUS TIME SEQUENCE—Continued

Record (sec)	Speed (mph)
250	0.0
251	0.0
252	0.0
253	0.0
254	0.0
255	0.0
256	0.0
257	0.0
258	0.0
259	0.0
260	0.0
261	0.0
262	0.0
263	0.0
264	0.0
265	0.0
266	0.0
267	0.0
268	0.0
269	0.0
270	0.0
271	0.0
272	0.0
273	0.0
274	0.0
275	0.0
276	0.0
277	0.0
278	0.0
279	0.0
280	0.0
281	0.0
282	0.0
283	0.0
284	0.0
285	0.0
286	0.0
287	0.0
288	0.0
289	0.0
290	0.0
291	0.0
292	0.0
293	0.0
294	0.0
295	0.0
296	0.0
297	0.0
298	0.0
299	0.0
300	0.24
301	0.60
302	0.0
303	1.42
304	2.00
305	3.08
306	5.63
307	4.00
308	4.00
309	3.34
310	1.37
311	1.00
312	0.0
313	0.0
314	0.0
315	0.0
316	0.0
317	0.0
318	0.0
319	0.23
320	1.39

SPEED VERSUS TIME SEQUENCE—Continued

Record (sec)	Speed (mph)
321	2.00
322	4.11
323	5.00
324	6.02
325	7.18
326	7.33
327	6.49
328	7.00
329	7.00
330	7.00
331	7.00
332	7.00
333	7.43
334	8.00
335	8.00
336	7.09
337	11.06
338	12.89
339	14.49
340	11.46
341	13.08
342	16.55
343	16.00
344	15.34
345	12.32
346	13.00
347	13.00
348	13.00
349	15.86
350	12.00
351	11.73
352	11.00
353	11.00
354	11.00
355	11.90
356	12.89
357	10.36
358	7.26
359	4.95
360	4.68
361	6.68
362	8.00
363	7.84
364	7.00
365	6.53
366	7.89
367	10.57
368	11.00
369	10.10
370	10.74
371	10.42
372	11.00
373	12.46
374	14.77
375	14.09
376	16.20
377	17.00
378	17.00
379	17.00
380	17.00
381	15.02
382	15.71
383	14.00
384	14.92
385	15.38
386	15.78
387	16.00
388	16.00
389	16.25
390	17.41
391	18.56

SPEED VERSUS TIME SEQUENCE—Continued

Record (sec)	Speed (mph)
392	19.00
393	19.88
394	21.00
395	21.00
396	21.00
397	20.49
398	20.00
399	19.18
400	19.00
401	18.86
402	18.29
403	19.00
404	19.61
405	20.00
406	20.00
407	20.00
408	20.00
409	20.00
410	19.45
411	20.42
412	21.87
413	20.97
414	20.37
415	22.00
416	22.00
417	22.66
418	23.00
419	23.97
420	25.51
421	29.00
422	29.00
423	29.00
424	30.51
425	31.00
426	30.00
427	30.00
428	30.00
429	30.54
430	31.00
431	31.86
432	31.00
433	31.17
434	32.33
435	33.00
436	33.00
437	33.80
438	34.00
439	35.12
440	36.00
441	36.00
442	34.82
443	33.25
444	32.09
445	32.00
446	32.00
447	32.00
448	32.00
449	32.00
450	32.85
451	33.01
452	34.00
453	33.68
454	32.52
455	32.00
456	32.00
457	32.95
458	33.00
459	33.00
460	33.42
461	34.00
462	34.74

SPEED VERSUS TIME SEQUENCE—Continued

Record (sec)	Speed (mph)
463	35.00
464	35.00
465	35.00
466	35.00
467	35.00
468	35.00
469	35.84
470	37.99
471	38.00
472	37.69
473	38.41
474	39.37
475	39.00
476	39.00
477	38.10
478	39.00
479	39.41
480	40.57
481	41.73
482	42.00
483	41.92
484	40.00
485	40.00
486	39.49
487	37.66
488	37.00
489	36.01
490	34.86
491	33.70
492	32.54
493	29.54
494	26.46
495	22.28
496	19.91
497	18.76
498	17.60
499	16.44
500	14.57
501	13.13
502	11.97
503	10.81
504	9.31
505	7.50
506	6.34
507	4.37
508	3.03
509	1.87
510	0.71
511	0.0
512	0.0
513	0.0
514	0.0
515	0.0
516	0.0
517	0.0
518	0.0
519	0.0
520	0.0
521	0.0
522	0.0
523	0.0
524	0.0
525	0.0
526	0.0
527	0.0
528	0.0
529	0.0
530	0.0
531	0.0
532	0.0
533	0.0

SPEED VERSUS TIME SEQUENCE—Continued

Record (sec)	Speed (mph)
534	0.0
535	0.0
536	0.0
537	0.0
538	0.0
539	0.0
540	0.0
541	0.0
542	0.0
543	0.0
544	2.36
545	3.94
546	5.31
547	8.26
548	9.42
549	11.15
550	12.73
551	14.78
552	16.05
553	17.41
554	19.72
555	21.52
556	23.35
557	24.83
558	25.99
559	27.15
560	28.31
561	29.46
562	30.62
563	31.78
564	32.94
565	34.18
566	36.25
567	37.41
568	38.56
569	39.72
570	40.00
571	40.00
572	40.00
573	40.00
574	40.00
575	40.00
576	40.82
577	41.00
578	41.00
579	41.30
580	42.00
581	42.00
582	42.00
583	42.93
584	43.00
585	43.00
586	43.00
587	43.56
588	44.71
589	45.00
590	44.97
591	44.18
592	44.66
593	44.00
594	44.00
595	44.81
596	45.00
597	45.00
598	45.00
599	45.44
600	46.00
601	46.00
602	46.92
603	47.00
604	47.00

SPEED VERSUS TIME SEQUENCE—Continued

Record (sec)	Speed (mph)
605	47.00
606	47.00
607	47.00
608	47.00
609	47.04
610	49.00
611	49.33
612	49.51
613	49.00
614	49.00
615	49.00
616	49.00
617	48.72
618	48.87
619	50.00
620	50.00
621	50.00
622	50.00
623	49.78
624	49.00
625	49.00
626	49.69
627	50.00
628	50.00
629	50.00
630	49.68
631	49.00
632	49.00
633	48.20
634	48.00
635	48.00
636	48.27
637	49.00
638	49.58
639	50.00
640	50.00
641	50.00
642	50.00
643	50.00
644	50.00
645	50.00
646	50.00
647	50.00
648	50.00
649	50.00
650	50.47
651	51.00
652	51.00
653	51.00
654	51.00
655	51.00
656	51.42
657	52.00
658	52.00
659	52.00
660	52.00
661	52.20
662	53.00
663	53.00
664	53.00
665	53.00
666	53.00
667	53.00
668	53.00
669	53.00
670	52.38
671	52.00
672	52.93
673	52.91
674	52.25
675	53.00

SPEED VERSUS TIME SEQUENCE—Continued

Record (sec)	Speed (mph)
676	53.00
677	53.00
678	53.00
679	53.00
680	53.00
681	53.00
682	53.00
683	53.00
684	53.00
685	53.98
686	55.00
687	55.00
688	55.00
689	55.00
690	55.00
691	55.00
692	55.00
693	55.00
694	55.00
695	55.00
696	55.00
697	55.00
698	55.00
699	55.00
700	55.00
701	54.50
702	54.66
703	55.00
704	54.03
705	54.00
706	54.00
707	54.00
708	54.00
709	54.00
710	54.00
711	54.00
712	54.00
713	54.77
714	56.00
715	56.00
716	56.00
717	56.02
718	57.00
719	56.67
720	56.00
721	56.00
722	56.00
723	56.00
724	56.00
725	56.00
726	56.00
727	56.00
728	56.00
729	56.91
730	57.00
731	57.00
732	57.00
733	57.00
734	57.00
735	57.85
736	58.00
737	58.00
738	58.00
739	58.00
740	58.00
741	58.00
742	58.00
743	58.00
744	58.00
745	57.15
746	56.00

SPEED VERSUS TIME SEQUENCE—Continued

Record (sec)	Speed (mph)
747	56.00
748	56.00
749	56.00
750	56.00
751	55.63
752	55.00
753	55.00
754	55.00
755	55.00
756	55.00
757	55.00
758	55.00
759	55.00
760	54.22
761	54.00
762	54.00
763	54.00
764	54.00
765	54.00
766	54.00
767	54.00
768	54.00
769	54.00
770	54.00
771	54.00
772	54.00
773	54.00
774	53.01
775	50.86
776	49.70
777	48.54
778	47.39
779	46.23
780	45.07
781	43.91
782	42.51
783	40.60
784	39.44
785	38.28
786	37.13
787	35.94
788	33.81
789	32.66
790	30.50
791	28.34
792	26.37
793	25.03
794	21.87
795	19.85
796	16.56
797	15.40
798	14.24
799	12.17
800	10.71
801	6.08
802	2.61
803	1.45
804	0.30
805	0.0
806	0.0
807	0.0
808	0.0
809	0.0
810	0.0
811	0.0
812	0.0
813	0.0
814	0.0
815	0.0
816	0.0
817	0.0

SPEED VERSUS TIME SEQUENCE—Continued

Record (sec)	Speed (mph)
818	0.0
819	0.0
820	0.0
821	0.0
822	0.0
823	0.0
824	0.0
825	0.0
826	0.0
827	0.0
828	0.0
829	0.0
830	0.0
831	0.19
832	1.00
833	1.51
834	2.66
835	4.64
836	6.96
837	8.86
838	7.71
839	7.45
840	9.22
841	10.00
842	9.08
843	10.08
844	11.24
845	12.79
846	14.00
847	12.58
848	12.87
849	13.00
850	13.00
851	13.68
852	15.00
853	15.00
854	13.37
855	12.03
856	12.26
857	14.29
858	14.56
859	15.20
860	16.76
861	17.00
862	17.00
863	17.23
864	18.77
865	20.54
866	19.60
867	18.14
868	17.98
869	17.00
870	16.34
871	15.00
872	15.00
873	15.00
874	15.96
875	12.35
876	15.28
877	14.27
878	12.59
879	12.25
880	9.28
881	8.00
882	8.00
883	8.38
884	9.53
885	10.69
886	11.00
887	9.00
888	9.00

SPEED VERSUS TIME SEQUENCE—Continued

Record (sec)	Speed (mph)
889	9.32
890	10.00
891	9.36
892	9.00
893	9.95
894	14.33
895	17.53
896	19.42
897	20.00
898	20.74
899	21.00
900	21.11
901	23.84
902	27.00
903	27.00
904	29.05
905	32.52
906	31.01
907	31.00
908	31.62
909	33.00
910	32.37
911	30.43
912	30.00
913	30.00
914	30.51
915	32.41
916	33.00
917	32.27
918	32.00
919	31.04
920	32.20
921	33.36
922	34.00
923	34.00
924	34.00
925	33.01
926	31.86
927	30.10
928	26.17
929	23.39
930	21.46
931	17.28
932	15.83
933	13.76
934	12.60
935	10.33
936	8.28
937	5.38
938	2.91
939	0.0
940	0.0
941	0.0
942	0.0
943	0.0
944	0.0
945	0.0
946	0.0
947	0.0
948	0.0
949	0.0
950	0.0
951	0.0
952	0.0
953	0.0
954	0.0
955	0.0
956	0.0
957	0.0
958	0.0
959	0.0

SPEED VERSUS TIME SEQUENCE—Continued

Record (sec)	Speed (mph)
960	0.0
961	0.0
962	0.0
963	0.0
964	0.0
965	0.0
966	0.0
967	0.0
968	0.0
969	0.0
970	0.0
971	0.0
972	0.0
973	0.0
974	0.0
975	0.0
976	0.0
977	0.0
978	0.0
979	0.0
980	0.51
981	0.33
982	0.0
983	0.0
984	0.0
985	0.0
986	0.0
987	0.0
988	0.0
989	0.0
990	0.0
991	0.0
992	0.0
993	0.0
994	0.0
995	0.0
996	0.0
997	0.0
998	0.0
999	0.0
1000	0.0
1001	0.0
1002	0.0
1003	0.13
1004	0.71
1005	0.0
1006	0.0
1007	0.0
1008	0.0
1009	4.15
1010	6.00
1011	6.00
1012	6.00

SPEED VERSUS TIME SEQUENCE—Continued

Record (sec)	Speed (mph)
1013	5.30
1014	4.14
1015	1.96
1016	0.0
1017	0.0
1018	0.0
1019	0.0
1020	0.0
1021	0.0
1022	0.0
1023	0.0
1024	0.0
1025	0.0
1026	0.0
1027	0.0
1028	0.0
1029	0.0
1030	0.0
1031	0.0
1032	0.0
1033	0.0
1034	0.0
1035	0.0
1036	0.0
1037	0.48
1038	1.64
1039	0.41
1040	0.0
1041	0.0
1042	0.0
1043	0.0
1044	0.0
1045	0.0
1046	0.0
1047	0.0
1048	0.0
1049	0.0
1050	0.0
1051	0.0
1052	0.0
1053	0.0
1054	0.0
1055	0.0
1056	0.0
1057	0.0
1058	0.0
1059	0.0
1060	0.0

(e) EPA New York City Cycle for Light-Duty Vehicles and Light-Duty Trucks.

EPA NEW YORK CITY CYCLE

[Speed versus time sequence]

Time (sec)	Speed (mph)	Time (sec)	Speed (mph)	Time (sec)	Speed (mph)
0	0	1	0	2	0
3	0	4	0	5	0
6	0	7	0	8	0
9	0	10	0	11	0
12	0	13	0	14	0
15	0	16	0	17	0
18	0	19	0	20	0
21	0	22	0	23	0
24	0	25	0	26	0
27	0	28	0	29	0
30	0	31	0	32	0
33	0	34	0	35	0

EPA NEW YORK CITY CYCLE—Continued

[Speed versus time sequence]

Time (sec)	Speed (mph)	Time (sec)	Speed (mph)	Time (sec)	Speed (mph)
36	0	37	0	38	0
39	0	40	0	41	0
42	0	43	0	44	0
45	0	46	0	47	0.4
48	2.8	49	5.6	50	7.0
51	7.6	52	7.6	53	6.2
54	6.4	55	7.6	56	9.5
57	8.9	58	8.6	59	9.6
60	12.4	61	15.0	62	17.8
63	21.0	64	22.9	65	21.7
66	18.2	67	14.5	68	10.2
69	5.6	70	2.5	71	2.1
72	3.1	73	5.7	74	9.0
75	10.8	76	10.8	77	9.5
78	6.5	79	3.9	80	2.6
81	1.0	82	0.8	83	0.1
84	0	85	0	86	0
87	0	88	0	89	0
90	0	91	0	92	0
93	0	94	0	95	0
96	2.7	97	8.3	98	12.4
99	15.7	100	17.4	101	17.3
102	17.2	103	15.1	104	11.2
105	8.6	106	5.9	107	5.4
108	6.8	109	6.9	110	4.8
111	5.7	112	7.1	113	6.8
114	5.9	115	6.0	116	6.0
117	5.9	118	5.6	119	5.5
120	7.2	121	9.9	122	10.8
123	11.4	124	11.9	125	12.1
126	12.6	127	12.3	128	10.6
129	9.9	130	9.4	131	8.9
132	7.6	133	6.1	134	5.0
135	3.7	136	2.6	137	1.0
138	0.8	139	0.1	140	0.4
141	0.2	142	0	143	0
144	0	145	1.3	146	6.0
147	10.2	148	12.1	149	13.8
150	15.1	151	16.2	152	15.9
153	16.0	154	16.8	155	17.5
156	18.0	157	19.6	158	21.7
159	23.1	160	23.7	161	24.1
162	24.5	163	25.0	164	25.2
165	24.6	166	24.3	167	23.3
168	22.7	169	22.1	170	21.6
171	21.1	172	20.3	173	19.2
174	17.0	175	13.9	176	14.1
177	14.6	178	14.6	179	14.5
180	14.4	181	14.2	182	14.2
183	13.2	184	11.5	185	8.4
186	5.5	187	3.7	188	2.9
189	1.3	190	0.8	191	0.3
192	0.1	193	0.1	194	0
195	1.3	196	3.9	197	9.9
198	15.9	199	19.3	200	20.7
201	21.4	202	21.4	203	20.5
204	19.0	205	16.7	206	13.1
207	11.2	208	14.9	209	19.8
210	23.8	211	25.7	212	26.2
213	26.4	214	23.3	215	19.6
216	18.9	217	19.3	218	19.4
219	18.5	220	17.5	221	16.4
222	15.6	223	15.6	224	16.0
225	16.8	226	17.5	227	18.0
228	19.6	229	21.7	230	23.5
231	24.6	232	25.0	233	24.3
234	23.1	235	20.7	236	17.2
237	13.5	238	9.2	239	3.3
240	0	241	0	242	0
243	0	244	0	245	0
246	0	247	0	248	0

EPA NEW YORK CITY CYCLE—Continued

[Speed versus time sequence]

Time (sec)	Speed (mph)	Time (sec)	Speed (mph)	Time (sec)	Speed (mph)
249	0	250	0	251	0
252	0	253	0	254	0.2
255	2.0	256	4.5	257	6.4
258	7.2	259	7.6	260	7.2
261	6.6	262	6.5	263	5.1
264	4.4	265	5.5	266	3.0
267	3.4	268	3.0	269	2.9
270	1.3	271	0.8	272	0.3
273	0	274	0	275	0.3
276	4.7	277	9.7	278	13.9
279	16.7	280	19.1	281	20.5
282	20.5	283	19.7	284	19.9
285	20.4	286	20.9	287	21.4
288	21.9	289	22.4	290	22.1
291	21.4	292	20.8	293	20.3
294	20.5	295	19.3	296	17.3
297	17.1	298	16.7	299	14.3
300	11.9	301	10.7	302	10.2
303	9.4	304	10.6	305	12.8
306	13.7	307	12.3	308	10.4
309	8.6	310	5.5	311	3.2
312	2.0	313	0.6	314	0
315	0	316	0	317	0
318	0	319	0	320	0
321	0	322	0	323	2.5
324	6.1	325	5.5	326	3.2
327	3.6	328	6.1	329	9.1
330	9.8	331	8.6	332	6.8
333	5.9	334	5.6	335	6.0
336	7.2	337	8.4	338	9.3
339	7.6	340	5.5	341	2.5
342	0.1	343	0	344	0
345	0	346	0	347	0
348	0	349	0	350	0
351	0	352	0	353	0
354	0	355	0	356	0
357	0	358	0	359	0
360	0	361	0	362	0
363	0	364	0	365	0
366	0	367	0	368	0
369	0	370	0	371	0
372	0	373	0	374	0
375	0	376	0	377	0
378	0	379	0	380	0
381	0	382	0	383	0
384	0	385	0	386	0
387	0	388	0	389	0
390	0	391	0	392	0
393	0	394	0	395	0.2
396	1.6	397	3.0	398	3.0
399	2.1	400	2.3	401	4.6
402	7.8	403	9.9	404	10.7
405	10.2	406	10.1	407	10.7
408	10.9	409	11.4	410	11.1
411	10.0	412	8.8	413	8.2
414	8.6	415	10.2	416	11.8
417	13.0	418	13.3	419	12.8
420	11.7	421	11.7	422	12.4
423	13.7	424	14.4	425	14.3
426	14.7	427	15.1	428	15.3
429	15.8	430	14.5	431	12.2
432	11.1	433	12.0	434	13.1
435	12.2	436	8.9	437	7.7
438	7.6	439	8.0	440	5.5
441	3.3	442	2.4	443	1.4
444	0.6	445	0	446	0
447	0	448	0	449	0
450	0	451	0	452	0
453	0	454	0	455	0
456	0	457	0	458	0
459	0	460	0	461	0

EPA NEW YORK CITY CYCLE—Continued

[Speed versus time sequence]

Time (sec)	Speed (mph)	Time (sec)	Speed (mph)	Time (sec)	Speed (mph)
462	0	463	0	464	0
465	0	466	0	467	0
468	0	469	0	470	0
471	0	472	0	473	0
474	0	475	0	476	0
477	0	478	0	479	0
480	0	481	0	482	0
483	0	484	0	485	0
486	0	487	0	488	0
489	0	490	0	491	0
492	0	493	0	494	0
495	1.0	496	4.1	497	7.4
498	10.2	499	11.3	500	11.8
501	12.2	502	14.3	503	16.0
504	17.8	505	18.6	506	19.6
507	20.2	508	19.9	509	19.7
510	20.8	511	21.0	512	18.8
513	17.6	514	13.0	515	7.5
516	2.9	517	0.8	518	0
519	0.2	520	0.7	521	1.4
522	2.3	523	2.7	524	3.0
525	2.6	526	1.2	527	0.1
528	0.7	529	1.8	530	3.1
531	3.9	532	5.3	533	7.8
534	9.7	535	10.3	536	10.2
537	9.4	538	7.1	539	6.8
540	8.9	541	10.6	542	11.9
543	15.5	544	19.6	545	22.8
546	25.1	547	26.0	548	26.7
549	27.3	550	27.7	551	27.6
552	27.3	553	25.7	554	23.3
555	20.6	556	17.8	557	14.9
558	11.3	559	7.4	560	4.6
561	1.7	562	0.7	563	0
564	0	565	0	566	0
567	0	568	0	569	0
570	0	571	0	572	0
573	0	574	0	575	0
576	0	577	0	578	0
579	0	580	0	581	0
582	0	583	0	584	0
585	0	586	0	587	0
588	0	589	0	590	0
591	0	592	0	593	0
594	0	595	0	596	0
597	0	598	0	599	0
600	0				

(f)(1) EPA Engine Dynamometer Schedules for Heavy-duty Otto-cycle engines.

Record (seconds)	Percent	
	Normalized revolutions per minute	Normalized torque
1	0.0	0.0
2	0.0	0.0
3	0.0	0.0
4	0.0	0.0
5	0.0	0.0
6	0.0	0.0
7	0.0	0.0
8	0.0	0.0
9	0.0	0.0
10	0.0	0.0
11	0.0	0.0
12	0.0	0.0
13	0.0	0.0
14	0.0	0.0
15	0.0	0.0
16	0.0	0.0
17	0.0	0.0
18	0.0	0.0
19	0.0	0.0
20	0.0	0.0
21	0.0	0.0
22	0.0	0.0
23	0.0	0.0
24	0.0	0.0
25	7.00	44.40
26	16.00	85.40
27	27.00	97.80

Record (seconds)	Percent	
	Normalized revolutions per minute	Normalized torque
28	38.00	100.00
29	45.00	100.00
30	51.00	100.00
31	54.00	97.50
32	53.00	90.00
33	49.00	75.20
34	45.00	50.00
35	40.00	10.00
36	34.00	2.30
37	27.00	0.0
38	21.00	2.30
39	16.00	12.00
40	12.00	35.30
41	8.50	4.90
42	5.00	−10.00
43	3.00	−10.00
44	0.0	0.0
45	0.0	0.0
46	0.0	0.0
47	0.0	0.0
48	0.0	0.0
49	0.0	0.0
50	0.0	0.0
51	3.00	10.00
52	11.00	40.20
53	20.00	53.00
54	27.50	64.80
55	32.00	78.00
56	32.00	78.00
57	27.50	56.00
58	26.00	24.40
59	24.00	−8.40
60	23.00	−10.00
61	24.00	−10.00
62	27.00	−10.00
63	34.00	−10.00
64	44.00	28.00
65	57.00	74.40
66	60.00	74.40
67	53.00	33.60
68	48.00	−10.00
69	44.00	−10.00
70	40.00	−10.00
71	40.00	7.00
72	44.00	22.70
73	46.00	30.00
74	46.00	32.00
75	44.00	25.00
76	40.00	18.00
77	37.00	14.00
78	36.00	10.00
79	34.00	0.0
80	34.00	−10.00
81	32.00	−10.00
82	31.00	−10.00
83	36.00	39.90
84	42.00	84.70
85	48.00	90.00
86	50.00	90.00
87	50.00	90.00
88	47.00	85.00
89	43.00	75.00
90	38.00	60.00
91	36.00	36.00
92	36.00	7.50
93	36.30	−10.00
94	45.00	64.50
95	53.00	67.00
96	58.00	64.50
97	62.00	60.30
98	63.00	55.50
99	62.00	52.30
100	61.00	47.00
101	55.00	44.00
102	50.00	39.00
103	45.00	36.00
104	40.00	34.00
105	36.00	30.00
106	34.00	25.80
107	32.00	20.00
108	30.00	14.60
109	26.00	10.00
110	23.00	0.0
111	18.00	−8.00
112	16.00	−10.00
113	18.00	−8.00
114	20.00	27.60
115	17.00	4.00
116	14.00	−8.00
117	12.00	−10.00
118	9.00	−10.00
119	7.00	−10.00
120	7.00	−10.00
121	5.00	−10.00
122	4.00	−10.00
123	3.00	−10.00
124	2.00	−8.00
125	0.0	0.0
126	0.0	0.0
127	0.0	0.0
128	0.0	0.0
129	0.0	0.0
130	5.00	8.00
131	8.00	16.30
132	10.00	27.50
133	8.00	27.50
134	5.00	9.00
135	2.00	1.80
136	0.0	0.0
137	0.0	0.0
138	0.0	0.0
139	0.0	0.0
140	0.0	0.0
141	0.0	0.0
142	0.0	0.0
143	0.0	0.0
144	0.0	0.0
145	0.0	0.0
146	0.0	0.0
147	0.0	0.0
148	0.0	0.0
149	2.00	4.80
150	1.00	4.50
151	0.0	0.0
152	0.0	0.0
153	0.0	0.0
154	0.0	0.0
155	0.0	0.0
156	0.0	0.0
157	0.0	0.0
158	0.0	0.0
159	0.0	0.0
160	0.0	0.0
161	0.0	0.0
162	0.0	0.0
163	0.0	0.0
164	0.0	0.0
165	0.0	0.0
166	0.0	0.0
167	8.00	27.00
168	18.00	65.00
169	23.00	82.50

Record (seconds)	Percent	
	Normalized revolutions per minute	Normalized torque
170	23.00	88.00
171	21.00	88.00
172	18.00	81.30
173	17.00	32.00
174	15.00	−10.00
175	13.00	−10.00
176	11.00	−10.00
177	8.00	−10.00
178	6.00	−10.00
179	4.00	−10.00
180	2.00	−10.00
181	0.0	0.0
182	0.0	0.0
183	0.0	0.0
184	0.0	0.0
185	0.0	0.0
186	0.0	0.0
187	0.0	0.0
188	0.0	0.0
189	0.0	0.0
190	0.0	0.0
191	0.0	0.0
192	0.0	0.0
193	0.0	0.0
194	0.0	0.0
195	0.0	0.0
196	0.0	0.0
197	0.0	0.0
198	0.0	0.0
199	0.0	0.0
200	0.0	0.0
201	0.0	0.0
202	0.0	0.0
203	0.0	0.0
204	0.0	4.00
205	0.50	7.70
206	5.00	14.00
207	11.00	24.70
208	15.00	42.30
209	16.00	70.00
210	17.00	70.00
211	17.00	50.00
212	16.00	26.30
213	14.00	5.00
214	10.00	−10.00
215	10.00	−10.00
216	14.00	73.30
217	18.00	83.00
218	19.00	84.80
219	18.00	84.80
220	16.00	82.80
221	11.00	74.00
222	7.00	8.50
223	4.00	0.0
224	0.0	0.0
225	0.0	0.0
226	0.0	0.0
227	0.0	0.0
228	0.0	0.0
229	0.0	0.0
230	0.0	0.0
231	0.0	0.0
232	0.0	0.0
233	6.00	17.60
234	6.00	19.60
235	5.00	14.00
236	3.00	9.80
237	1.00	5.50
238	0.0	3.00
239	0.0	0.0
240	0.0	0.0
241	0.0	0.0
242	0.0	0.0
243	0.0	0.0
244	0.0	0.0
245	0.0	0.0
246	0.0	0.0
247	0.0	0.0
248	0.0	0.0
249	0.0	0.0
250	0.0	0.0
251	0.0	0.0
252	0.0	0.0
253	0.0	0.0
254	0.0	0.0
255	0.0	0.0
256	0.0	0.0
257	0.0	0.0
258	0.0	0.0
259	0.0	0.0
260	0.0	0.0
261	0.0	0.0
262	0.0	0.0
263	0.0	0.0
264	0.0	0.0
265	0.0	0.0
266	0.0	0.0
267	0.0	0.0
268	0.0	0.0
269	0.0	0.0
270	0.0	0.0
271	0.0	0.0
272	0.0	0.0
273	0.0	0.0
274	0.0	0.0
275	0.0	0.0
276	0.0	0.0
277	0.0	0.0
278	0.0	0.0
279	0.0	0.0
280	0.0	0.0
281	0.0	7.00
282	1.00	10.00
283	2.00	11.50
284	1.00	10.00
285	0.0	0.0
286	0.0	0.0
287	0.0	0.0
288	0.0	0.0
289	0.0	0.0
290	0.0	0.0
291	0.0	0.0
292	0.0	0.0
293	0.0	0.0
294	0.0	0.0
295	0.0	0.0
296	0.0	0.0
297	0.0	0.0
298	0.0	0.0
299	0.0	28.00
300	0.0	30.00
301	2.00	32.00
302	6.00	34.00
303	14.00	36.00
304	19.00	36.00
305	24.50	36.00
306	24.50	36.00
307	24.00	30.00
308	19.00	24.00
309	13.00	18.00
310	9.00	14.00
311	7.00	8.00

Record (seconds)	Percent	
	Normalized revolutions per minute	Normalized torque
312	6.00	0.0
313	4.00	3.00
314	3.00	6.80
315	0.0	0.0
316	0.0	0.0
317	0.0	0.0
318	0.0	0.0
319	0.0	0.0
320	0.0	0.0
321	0.0	0.0
322	0.0	0.0
323	0.0	18.00
324	3.00	40.00
325	8.00	86.00
326	18.00	97.00
327	38.00	100.00
328	45.50	100.00
329	45.00	96.00
330	44.00	84.40
331	43.00	53.60
332	41.00	5.00
333	43.00	47.60
334	44.00	90.00
335	45.00	90.00
336	44.00	73.00
337	40.00	54.00
338	38.00	34.70
339	36.00	10.00
340	35.00	10.00
341	35.00	10.00
342	35.50	60.00
343	36.00	57.90
344	37.00	53.00
345	39.00	50.00
346	40.50	50.00
347	43.00	50.00
348	45.00	50.00
349	48.00	50.00
350	51.00	52.00
351	56.00	58.70
352	64.00	70.00
353	68.00	70.00
354	70.00	70.00
355	65.50	64.60
356	61.00	28.90
357	55.00	−5.00
358	50.00	−10.00
359	45.00	−10.00
360	38.00	−10.00
361	28.00	−10.00
362	19.00	−10.00
363	14.00	−10.00
364	7.00	−10.00
365	2.00	−5.00
366	3.00	5.00
367	7.00	25.00
368	9.00	38.00
369	7.00	17.00
370	4.00	2.00
371	3.00	−9.00
372	3.00	−10.00
373	11.00	70.00
374	15.00	97.60
375	16.00	100.00
376	19.00	100.00
377	26.00	100.00
378	29.00	95.00
379	25.00	63.00
380	19.00	−10.00
381	12.00	−10.00
382	8.00	−10.00
383	5.00	−10.00
384	2.00	−10.00
385	1.00	−10.00
386	0.0	0.0
387	0.0	0.0
388	0.0	0.0
389	0.0	0.0
390	0.0	0.0
391	0.0	0.0
392	0.0	0.0
393	0.0	0.0
394	0.0	0.0
395	0.0	0.0
396	0.0	0.0
397	0.0	0.0
398	0.0	0.0
399	0.0	0.0
400	0.0	0.0
401	0.0	0.0
402	0.0	0.0
403	0.0	0.0
404	0.0	0.0
405	0.0	0.0
406	0.0	0.0
407	0.0	0.0
408	0.0	0.0
409	0.0	0.0
410	0.0	0.0
411	0.0	0.0
412	0.0	0.0
413	0.0	0.0
414	0.0	0.0
415	0.0	0.0
416	0.0	0.0
417	0.0	0.0
418	0.0	0.0
419	4.00	20.00
420	4.00	20.00
421	0.0	0.0
422	0.0	0.0
423	0.0	0.0
424	0.0	0.0
425	0.0	0.0
426	0.0	0.0
427	0.0	0.0
428	0.0	0.0
429	0.0	0.0
430	2.00	0.0
431	6.00	2.00
432	14.00	28.80
433	20.00	30.00
434	24.40	11.00
435	24.00	10.00
436	24.00	12.00
437	28.00	52.00
438	32.00	52.00
439	34.00	46.00
440	34.00	30.00
441	34.50	30.00
442	35.00	30.00
443	36.00	35.00
444	39.00	40.00
445	45.00	50.00
446	49.00	56.00
447	50.00	−8.00
448	45.00	−10.00
449	39.00	−10.00
450	34.00	−10.00
451	28.00	−10.00
452	25.00	−10.00
453	21.00	−10.00

Record (seconds)	Percent	
	Normalized revolutions per minute	Normalized torque
454	18.00	−10.00
455	15.00	−10.00
456	12.00	−10.00
457	18.00	−8.00
458	29.00	19.80
459	40.00	54.00
460	52.00	82.00
461	64.00	95.00
462	71.00	99.00
463	77.00	100.00
464	84.00	100.00
465	85.00	99.00
466	85.00	95.00
467	84.00	90.00
468	82.00	84.60
469	80.00	78.50
470	78.00	78.50
471	77.00	70.00
472	76.00	65.50
473	74.00	61.50
474	72.00	56.00
475	70.00	52.00
476	68.00	46.00
477	66.50	40.00
478	65.00	32.00
479	63.00	26.00
480	61.00	25.60
481	61.00	72.00
482	61.00	78.00
483	58.00	72.00
484	50.00	64.00
485	44.00	55.00
486	35.00	40.00
487	26.00	20.00
488	21.00	−4.00
489	18.00	−10.00
490	16.00	−10.00
491	19.00	−8.00
492	24.00	2.00
493	32.00	68.50
494	45.00	78.00
495	51.00	86.00
496	58.00	92.00
497	64.00	97.00
498	71.00	100.00
499	73.00	98.00
500	73.00	94.00
501	73.00	86.00
502	73.00	82.00
503	76.00	84.00
504	80.00	98.00
505	84.00	100.00
506	85.00	100.00
507	84.00	100.00
508	81.00	92.00
509	75.00	80.00
510	73.00	70.00
511	70.00	60.00
512	67.00	53.00
513	65.00	45.00
514	63.00	36.50
515	62.00	28.00
516	61.00	22.50
517	60.00	23.00
518	60.00	24.00
519	60.00	24.00
520	60.00	26.00
521	61.00	60.00
522	62.00	64.00
523	63.00	64.00
524	64.00	64.00
525	62.00	64.00
526	56.00	60.00
527	53.00	−7.00
528	49.00	−10.00
529	47.00	−10.00
530	46.00	−10.00
531	45.00	−7.00
532	45.00	30.00
533	46.00	50.00
534	46.00	50.00
535	47.00	50.00
536	47.00	50.00
537	47.00	30.00
538	46.00	12.00
539	45.00	10.50
540	44.00	10.00
541	41.00	10.00
542	37.00	9.00
543	36.00	2.00
544	35.00	−10.00
545	38.00	67.00
546	35.00	−10.00
547	31.00	15.00
548	28.00	55.00
549	34.00	44.00
550	35.00	38.50
551	36.00	38.50
552	36.00	38.50
553	37.00	38.50
554	39.00	36.00
555	42.00	27.00
556	45.00	62.00
557	48.00	45.00
558	51.00	15.00
559	51.00	8.00
560	51.00	6.00
561	48.00	10.00
562	46.00	11.00
563	44.00	13.00
564	41.00	17.00
565	37.00	20.00
566	34.00	20.00
567	30.00	17.00
568	26.00	14.00
569	23.00	7.00
570	19.00	2.00
571	15.00	−5.00
572	11.00	−10.00
573	8.00	−10.00
574	5.00	−8.00
575	2.00	−5.00
576	0.0	0.0
577	0.0	0.0
578	0.0	0.0
579	0.0	0.0
580	0.0	0.0
581	0.0	0.0
582	0.0	0.0
583	4.00	15.00
584	19.00	31.00
585	30.00	46.00
586	37.00	68.00
587	40.00	76.00
588	41.00	77.00
589	40.50	78.00
590	40.00	77.00
591	40.00	64.00
592	38.00	10.00
593	38.00	25.00
594	40.00	50.00
595	40.00	36.00

Record (seconds)	Percent	
	Normalized revolutions per minute	Normalized torque
596	40.00	31.00
597	40.00	31.00
598	41.00	37.00
599	42.00	97.00
600	43.00	100.00
601	45.00	100.00
602	47.00	100.00
603	48.00	100.00
604	49.00	100.00
605	51.00	97.00
606	52.00	94.00
607	53.00	90.00
608	54.00	87.00
609	56.00	86.00
610	56.00	85.00
611	55.50	85.00
612	55.00	81.00
613	54.00	77.00
614	53.00	72.00
615	52.00	67.00
616	49.00	60.00
617	46.00	45.00
618	45.00	12.00
619	44.00	10.00
620	44.00	10.00
621	45.00	12.00
622	46.00	14.00
623	47.00	24.00
624	49.00	88.00
625	50.00	90.00
626	51.00	90.00
627	52.00	90.00
628	53.00	90.00
629	54.00	90.00
630	54.00	90.00
631	54.00	87.00
632	54.00	84.00
633	54.00	80.00
634	53.50	77.00
635	53.00	76.00
636	53.00	75.00
637	52.00	73.00
638	51.00	69.00
639	50.00	65.00
640	50.00	60.00
641	49.00	55.00
642	49.00	50.00
643	49.00	50.00
644	49.50	60.00
645	49.50	65.00
646	50.00	70.00
647	50.50	75.00
648	51.00	80.00
649	52.00	85.00
650	53.00	90.00
651	54.00	90.00
652	55.00	90.00
653	55.00	88.00
654	55.00	84.00
655	55.00	79.00
656	55.00	74.00
657	55.00	69.00
658	55.00	64.00
659	55.00	59.00
660	55.00	54.00
661	55.00	49.00
662	55.00	44.50
663	55.00	39.00
664	55.00	34.00
665	55.00	27.00
666	55.00	18.00
667	55.00	8.00
668	55.00	6.00
669	55.00	13.00
670	55.00	27.00
671	55.50	30.00
672	56.00	30.00
673	57.00	30.00
674	58.00	34.00
675	59.00	46.00
676	59.00	89.00
677	59.00	90.00
678	59.00	91.00
679	59.00	91.00
680	60.00	91.00
681	60.00	91.00
682	60.50	90.00
683	61.00	89.00
684	61.50	88.00
685	62.00	83.00
686	63.00	73.00
687	65.00	70.00
688	66.00	71.00
689	67.00	74.00
690	67.50	79.00
691	68.00	85.00
692	68.50	90.00
693	69.00	94.00
694	69.50	96.00
695	70.00	98.00
696	70.50	100.00
697	71.00	100.00
698	72.00	100.00
699	72.00	100.00
700	72.00	100.00
701	72.00	100.00
702	72.00	100.00
703	72.00	100.00
704	72.00	100.00
705	72.00	100.00
706	72.00	100.00
707	72.50	100.00
708	73.00	100.00
709	73.50	100.00
710	74.00	100.00
711	74.00	100.00
712	74.50	100.00
713	75.00	100.00
714	75.00	100.00
715	75.00	100.00
716	75.00	100.00
717	75.00	100.00
718	75.00	100.00
719	75.00	100.00
720	75.00	100.00
721	75.00	100.00
722	75.00	100.00
723	75.00	98.00
724	75.00	90.00
725	75.00	34.00
726	74.00	15.00
727	72.00	3.00
728	70.00	−7.00
729	69.00	−10.00
730	68.00	−10.00
731	70.50	53.00
732	73.00	80.00
733	75.00	88.00
734	77.00	94.00
735	79.00	97.00
736	82.00	97.00
737	85.00	98.00

Record (seconds)	Percent	
	Normalized revolutions per minute	Normalized torque
738	85.00	98.00
739	87.00	97.00
740	90.00	95.00
741	92.00	90.00
742	93.00	88.00
743	94.00	86.00
744	95.00	83.00
745	96.00	79.00
746	97.00	74.00
747	98.00	68.00
748	99.00	62.00
749	100.00	54.00
750	100.00	30.00
751	100.00	22.00
752	100.00	20.00
753	100.00	22.00
754	100.00	30.00
755	100.00	65.00
756	100.00	76.00
757	100.00	80.00
758	100.00	78.00
759	100.00	72.00
760	100.00	54.00
761	95.00	30.00
762	85.00	12.00
763	68.00	−5.00
764	57.00	−9.00
765	56.00	−10.00
766	57.00	−9.00
767	57.00	−5.00
768	57.00	22.00
769	58.00	40.00
770	59.00	45.00
771	59.00	46.00
772	59.50	45.00
773	60.00	33.00
774	60.00	0.0
775	60.00	−10.00
776	60.00	−10.00
777	60.00	34.00
778	60.00	50.00
779	60.00	60.00
780	60.00	69.00
781	60.00	75.00
782	60.00	79.00
783	61.00	83.00
784	61.00	84.00
785	61.00	85.00
786	62.00	85.00
787	62.00	85.00
788	62.00	85.00
789	63.00	85.00
790	63.00	85.00
791	64.00	85.00
792	64.00	85.00
793	64.00	85.00
794	64.00	85.00
795	64.00	85.00
796	64.00	84.50
797	64.00	84.00
798	64.00	83.00
799	64.00	82.00
800	64.00	81.00
801	64.00	77.00
802	64.00	72.00
803	65.00	67.00
804	66.00	64.00
805	67.00	60.00
806	69.00	62.30
807	72.00	84.00
808	73.00	90.50
809	74.00	91.00
810	74.00	90.00
811	74.00	84.50
812	73.00	74.00
813	72.00	66.00
814	71.00	60.00
815	70.00	54.00
816	69.00	50.00
817	68.00	49.00
818	68.00	48.00
819	68.00	48.00
820	68.00	48.50
821	68.00	49.00
822	68.00	51.00
823	68.00	53.50
824	68.00	55.00
825	68.00	58.00
826	68.00	60.00
827	68.00	62.00
828	68.00	64.00
829	68.00	67.00
830	69.00	68.50
831	70.00	70.00
832	70.00	70.00
833	70.00	70.00
834	70.00	70.00
835	70.00	70.00
836	70.00	70.00
837	71.00	66.00
838	73.00	64.00
839	75.00	64.00
840	77.00	98.00
841	79.00	100.00
842	81.00	100.00
843	82.00	100.00
844	83.00	100.00
845	84.00	98.00
846	84.00	94.00
847	85.00	93.00
848	86.00	94.00
849	87.00	98.00
850	89.00	100.00
851	92.00	100.00
852	95.00	100.00
853	97.50	100.00
854	100.00	100.00
855	100.00	100.00
856	100.00	100.00
857	100.00	100.00
858	100.00	97.00
859	96.00	−6.00
860	94.00	−10.00
861	91.00	−10.00
862	88.00	−10.00
863	86.00	−10.00
864	84.00	−10.00
865	82.00	−10.00
866	79.00	−10.00
867	77.00	−10.00
868	75.00	−10.00
869	73.00	−10.00
870	72.00	−10.00
871	72.00	−10.00
872	72.00	−8.00
873	71.00	8.00
874	68.00	9.00
875	64.00	−9.00
876	58.00	−8.00
877	56.00	53.00
878	56.00	67.00
879	56.00	70.00

Record (seconds)	Percent	
	Normalized revolutions per minute	Normalized torque
880	56.00	67.00
881	55.00	60.00
882	54.00	60.00
883	49.00	75.00
884	38.00	80.00
885	30.00	78.00
886	25.00	53.00
887	18.00	32.00
888	14.00	16.00
889	9.00	3.00
890	5.00	−6.00
891	1.00	−10.00
892	0.0	0.0
893	0.0	0.0
894	0.0	0.0
895	0.0	0.0
896	0.0	0.0
987	0.0	0.0
898	0.0	0.0
899	0.0	0.0
900	0.0	0.0
901	0.0	0.0
902	0.0	0.0
903	0.0	0.0
904	0.0	0.0
905	0.0	0.0
906	0.0	0.0
907	0.0	0.0
908	0.0	0.0
909	0.0	0.0
910	0.0	0.0
911	0.0	0.0
912	0.0	0.0
913	0.0	0.0
914	0.0	0.0
915	0.0	0.0
916	0.0	0.0
917	0.0	0.0
918	0.0	0.0
919	0.0	0.0
920	4.50	47.00
921	12.00	85.00
922	30.00	97.00
923	42.00	100.00
924	51.00	100.00
925	54.00	100.00
926	54.00	97.00
927	52.00	90.00
928	48.00	75.00
929	44.00	57.00
930	37.00	47.00
931	29.00	40.00
932	24.00	34.00
933	21.00	27.00
934	22.00	24.00
935	22.50	22.00
936	20.00	16.00
937	15.00	7.00
938	10.00	0.0
939	5.00	−7.00
940	2.00	−10.00
941	1.00	−10.00
942	0.0	0.0
943	0.0	0.0
944	0.0	0.0
945	1.00	0.0
946	5.00	20.00
947	15.00	43.00
948	28.00	52.00
949	34.00	64.00
950	37.00	74.00

Record (seconds)	Percent	
	Normalized revolutions per minute	Normalized torque
951	37.50	90.00
952	37.00	56.00
953	36.00	27.00
954	35.00	−2.00
955	33.00	−8.00
956	29.00	−10.00
957	29.00	−8.00
958	29.00	−2.00
959	34.00	30.00
960	38.00	75.00
961	34.00	70.00
962	31.00	25.00
963	28.00	−7.00
964	26.00	−10.00
965	24.00	−7.00
966	23.00	4.00
967	23.00	22.00
968	24.00	30.00
969	23.00	32.00
970	22.00	25.00
971	18.00	18.00
972	16.00	14.00
973	15.00	10.00
974	15.00	0.0
975	15.00	−7.00
976	15.00	−10.00
977	18.00	−8.00
978	25.00	40.00
979	37.00	90.00
980	46.00	90.00
981	49.00	90.00
982	49.00	90.00
983	49.00	85.00
984	47.00	77.00
985	44.00	59.00
986	43.00	36.00
987	42.00	13.00
988	40.00	−10.00
989	41.00	65.00
990	44.00	65.00
991	45.00	65.00
992	45.00	62.00
993	44.00	56.00
994	42.00	46.00
995	41.00	36.00
996	39.00	20.00
997	38.00	4.00
998	37.00	33.00
999	38.00	39.00
1,000	36.00	40.00
1,001	35.00	40.00
1,002	33.00	39.00
1,003	30.00	36.00
1,004	27.00	33.00
1,005	22.00	24.00
1,006	21.00	−5.00
1,007	20.00	−10.00
1,008	18.00	−6.00
1,009	17.00	28.00
1,010	16.00	5.00
1,011	14.00	−5.00
1,012	12.00	−9.00
1,013	9.00	−10.00
1,014	7.00	−10.00
1,015	5.00	−10.00
1,016	4.00	−10.00
1,017	3.00	−10.00
1,018	2.00	−10.00
1,019	0.0	0.0
1,020	0.0	0.0
1,021	0.0	0.0

Record (seconds)	Percent	
	Normalized revolutions per minute	Normalized torque
1,022	0.0	0.0
1,023	0.0	0.0
1,024	0.0	0.0
1,025	2.00	7.00
1,026	6.00	15.00
1,027	10.00	28.00
1,028	11.00	26.00
1,029	10.00	10.00
1,030	8.00	3.00
1,031	5.00	0.0
1,032	2.00	0.0
1,033	0.0	0.0
1,034	0.0	0.0
1,035	0.0	0.0
1,036	0.0	0.0
1,037	0.0	0.0
1,038	0.0	0.0
1,039	0.0	0.0
1,040	0.0	0.0
1,041	0.0	0.0
1,042	0.0	0.0
1,043	0.0	0.0
1,044	0.0	0.0
1,045	0.0	0.0
1,046	0.0	0.0
1,047	0.0	0.0
1,048	0.0	0.0
1,049	0.0	0.0
1,050	0.0	0.0
1,051	0.0	0.0
1,052	0.0	0.0
1,053	0.0	0.0
1,054	0.0	0.0
1,055	0.0	0.0
1,056	0.0	0.0
1,057	0.0	0.0
1,058	0.0	0.0
1,059	0.0	0.0
1,060	0.0	0.0
1,061	4.00	05.00
1,062	11.00	35.00
1,063	21.00	73.00
1,064	25.00	86.00
1,065	26.00	90.00
1,066	25.00	90.00
1,067	23.00	83.00
1,068	20.00	32.00
1,069	16.00	−6.00
1,070	14.00	−10.00
1,071	10.00	−10.00
1,072	7.00	−10.00
1,073	3.00	−10.00
1,074	1.00	−10.00
1,075	0.0	0.0
1,076	0.0	0.0
1,077	0.0	0.0
1,078	0.0	0.0
1,079	0.0	0.0
1,080	0.0	0.0
1,081	0.0	0.0
1,082	0.0	0.0
1,083	0.0	0.0
1,084	0.0	0.0
1,085	0.0	0.0
1,086	0.0	0.0
1,087	0.0	0.0
1,088	0.0	0.0
1,089	0.0	0.0
1,090	0.0	0.0
1,091	0.0	0.0
1,092	0.0	0.0

Record (seconds)	Percent	
	Normalized revolutions per minute	Normalized torque
1,093	0.0	0.0
1,094	0.0	0.0
1,095	0.0	0.0
1,096	0.0	0.0
1,097	0.0	0.0
1,098	1.00	3.00
1,099	3.00	6.00
1,100	6.00	13.00
1,101	9.00	14.00
1,102	12.00	16.00
1,103	15.00	28.00
1,104	18.00	60.00
1,105	20.00	47.00
1,106	21.00	31.00
1,107	21.00	15.00
1,108	20.00	−2.00
1,109	20.00	−10.00
1,110	20.00	−2.00
1,111	20.00	70.00
1,112	21.00	83.00
1,113	22.00	84.00
1,114	22.00	83.00
1,115	18.00	78.00
1,116	14.00	68.00
1,117	8.00	10.00
1,118	4.00	4.00
1,119	1.00	0.0
1,120	0.0	0.0
1,121	0.0	0.0
1,122	0.0	0.0
1,123	0.0	0.0
1,124	0.0	0.0
1,125	0.0	1.00
1,126	1.00	5.00
1,127	5.00	18.00
1,128	9.00	19.00
1,129	12.00	18.00
1,130	12.00	15.00
1,131	9.00	10.00
1,132	5.00	5.00
1,133	2.00	2.00
1,134	0.0	0.0
1,135	0.0	0.0
1,136	0.0	0.0
1,137	0.0	0.0
1,138	0.0	0.0
1,139	0.0	0.0
1,140	0.0	0.0
1,141	0.0	0.0
1,142	0.0	0.0
1,143	0.0	0.0
1,144	0.0	0.0
1,145	0.0	0.0
1,146	0.0	0.0
1,147	0.0	0.0
1,148	0.0	0.0
1,149	0.0	0.0
1,150	0.0	0.0
1,151	0.0	0.0
1,152	0.0	0.0
1,153	0.0	0.0
1,154	0.0	0.0
1,155	0.0	0.0
1,156	0.0	0.0
1,157	0.0	0.0
1,158	0.0	0.0
1,159	0.0	0.0
1,160	0.0	0.0
1,161	0.0	0.0
1,162	0.0	0.0
1,163	0.0	0.0

Record (seconds)	Percent	
	Normalized revolutions per minute	Normalized torque
1,164	0.0	0.0
1,165	0.0	0.0
1,166	0.0	0.0
1,167	0.0	0.0

(2) EPA Engine Dynamometer Schedule for Heavy-Duty Diesel Engines.

Record (seconds)	Percent	
	Normalized revolutions per minute	Normalized torque
1	0.0	0.0
2	0.0	0.0
3	0.0	0.0
4	0.0	0.0
5	0.0	0.0
6	0.0	0.0
7	0.0	0.0
8	0.0	0.0
9	0.0	0.0
10	0.0	0.0
11	0.0	0.0
12	0.0	0.0
13	0.0	0.0
14	0.0	0.0
15	0.0	0.0
16	0.0	0.0
17	0.0	0.0
18	0.0	0.0
19	0.0	0.0
20	0.0	0.0
21	0.0	0.0
22	0.0	0.0
23	0.0	0.0
24	0.0	0.0
25	0.0	3.67
26	0.0	47.69
27	3.11	59.41
28	9.09	84.54
29	15.62	80.00
30	33.49	80.00
31	37.93	79.29
32	31.20	38.25
33	21.99	26.67
34	30.00	15.10
35	22.23	16.47
36	19.61	28.05
37	20.00	20.38
38	18.33	(1)
39	6.55	(1)
40	15.82	(1)
41	23.63	(1)
42	17.51	(1)
43	14.19	62.52
44	16.64	69.36
45	27.77	60.00
46	37.03	63.79
47	47.36	75.36
48	54.77	80.00
49	57.70	80.00
50	54.03	79.92
51	58.00	65.03
52	58.65	43.23
53	62.88	50.00
54	69.83	50.00
55	72.00	42.05
56	75.81	40.00
57	84.22	42.20
58	83.86	41.28
59	80.55	(1)
60	80.51	(1)
61	78.00	(1)
62	79.79	(1)
63	80.33	30.54
64	85.58	42.12
65	81.78	50.00
66	78.00	50.00
67	80.74	43.16
68	92.10	73.65
69	88.01	(1)
70	84.00	(1)
71	84.00	(1)
72	81.17	(1)
73	70.46	(1)
74	66.00	13.57
75	62.23	29.43
76	64.00	20.00
77	63.48	17.42
78	60.34	10.00
79	56.85	10.00
80	56.00	(1)
81	52.45	(1)
82	39.91	10.00
83	36.38	10.00
84	30.00	10.00
85	27.93	10.00
86	26.00	16.74
87	27.66	3.36
88	28.00	(1)
89	27.41	(1)
90	20.96	(1)
91	12.15	(1)
92	3.81	(1)
93	0.0	0.0
94	0.0	0.0
95	0.0	0.91
96	0.0	7.52
97	0.0	0.0
98	0.0	0.0
99	0.0	0.0
100	0.0	0.0
101	0.0	0.0
102	0.0	0.0
103	0.0	0.0
104	0.0	0.0
105	0.0	0.0
106	0.0	0.0
107	0.0	0.0
108	0.0	0.0
109	0.0	0.0
110	0.0	0.0
111	0.0	0.0
112	0.0	0.0
113	0.0	0.0
114	0.0	0.0
115	0.0	0.0
116	0.0	0.0
117	0.0	0.0
118	0.0	0.0
119	0.0	0.0
120	0.0	0.0
121	0.0	0.0
122	0.0	0.0
123	0.0	0.0
124	0.0	0.0
125	0.0	0.0
126	0.0	0.0
127	0.0	0.0
128	0.0	0.0

Record (seconds)	Percent	
	Normalized revolutions per minute	Normalized torque
129	1.77	(1)
130	1.60	(1)
131	0.0	0.0
132	0.0	0.0
133	2.14	9.28
134	3.08	0.0
135	0.0	0.0
136	0.0	0.0
137	0.0	0.0
138	0.0	0.0
139	0.0	0.0
140	0.0	0.0
141	0.0	0.0
142	0.0	0.0
143	0.0	0.0
144	0.0	0.0
145	0.0	0.0
146	0.0	0.0
147	0.0	5.51
148	0.0	11.34
149	0.0	0.0
150	0.0	0.0
151	0.0	0.0
152	0.0	0.0
153	0.0	0.0
154	0.0	0.0
155	0.0	0.0
156	0.0	0.0
157	0.0	0.0
158	0.0	0.21
159	0.0	30.00
160	0.0	26.78
161	0.0	20.00
162	0.0	20.00
163	0.0	4.12
164	0.0	0.0
165	0.0	0.0
166	0.0	0.0
167	0.0	0.0
168	0.0	0.0
169	0.0	0.0
170	0.0	0.0
171	0.0	0.0
172	0.0	0.0
173	0.0	0.0
174	0.0	0.0
175	0.0	0.0
176	0.0	0.0
177	0.0	0.0
178	0.0	0.0
179	0.0	0.0
180	0.0	0.0
181	0.0	0.0
182	0.0	0.0
183	0.0	0.0
184	0.0	20.00
185	0.0	20.00
186	0.0	11.73
187	0.0	0.0
188	0.0	0.0
189	0.0	0.0
190	0.0	0.0
191	0.0	0.0
192	0.0	0.0
193	0.0	0.0
194	0.0	0.0
195	0.0	0.0
196	0.0	0.0
197	0.0	0.0
198	0.0	0.0
199	0.0	0.0

Record (seconds)	Percent	
	Normalized revolutions per minute	Normalized torque
200	0.0	0.0
201	0.0	0.0
202	0.0	0.0
203	0.0	0.0
204	0.0	0.0
205	0.0	0.0
206	0.0	0.0
207	0.0	0.0
208	0.0	0.0
209	0.0	0.0
210	0.0	0.0
211	0.0	0.0
212	0.0	0.0
213	0.0	0.0
214	0.0	73.41
215	0.0	90.00
216	31.30	81.30
217	41.15	90.00
218	44.00	90.00
219	46.41	90.00
220	51.04	82.41
221	66.66	80.00
222	75.03	90.00
223	89.85	90.00
224	96.78	93.88
225	96.91	50.94
226	94.60	17.02
227	99.16	28.60
228	100.00	39.83
229	100.00	30.00
230	100.00	26.69
231	100.98	20.00
232	100.71	20.00
233	100.00	36.06
234	96.16	40.00
235	95.77	30.00
236	94.55	32.75
237	96.86	35.68
238	99.18	30.00
239	100.00	44.93
240	101.81	50.00
241	86.54	(1)
242	63.56	(1)
243	56.00	(1)
244	46.00	(1)
245	41.86	45.18
246	38.31	78.47
247	35.98	80.00
248	31.03	80.00
249	25.36	80.00
250	23.05	60.97
251	18.20	27.34
252	12.84	43.71
253	10.10	68.95
254	3.79	68.95
255	1.48	44.28
256	0.0	0.0
257	0.0	0.0
258	0.0	0.0
259	0.0	0.0
260	0.0	0.0
261	0.0	0.0
262	0.0	0.0
263	0.0	24.97
264	0.0	17.16
265	0.0	6.20
266	0.0	10.00
267	0.0	10.00
268	0.0	0.0
269	0.0	0.0
270	0.0	0.0

Record (seconds)	Percent	
	Normalized revolutions per minute	Normalized torque
271	0.0	0.0
272	0.0	0.0
273	0.0	0.0
274	0.0	0.0
275	0.0	0.0
276	0.0	0.0
277	0.0	0.0
278	0.0	0.0
279	0.0	0.0
280	0.0	0.0
281	0.0	0.0
282	0.0	0.0
283	0.0	0.0
284	0.0	0.0
285	0.0	0.0
286	0.0	0.0
287	0.0	0.0
288	0.0	0.0
289	0.0	0.0
290	0.0	0.0
291	0.0	0.0
292	0.0	0.0
293	0.0	0.0
294	0.0	0.0
295	0.0	0.0
296	0.0	0.0
297	0.0	0.0
298	0.0	0.0
299	0.0	0.0
300	0.0	0.0
301	0.0	0.0
302	0.0	0.0
303	0.0	0.0
304	0.0	0.0
305	0.0	0.0
306	0.0	0.0
307	0.0	0.0
308	0.0	0.0
309	0.0	0.0
310	0.0	0.0
311	0.0	0.0
312	0.0	0.0
313	0.0	0.0
314	0.0	0.0
315	0.0	0.0
316	0.0	0.0
317	0.0	0.0
318	0.0	0.0
319	0.0	0.0
320	0.0	0.0
321	0.0	15.55
322	0.0	20.00
323	24.18	19.08
324	23.00	10.00
325	11.56	1.86
326	6.87	(1)
327	6.00	(1)
328	0.72	(1)
329	0.0	0.0
330	0.0	0.0
331	0.0	0.0
332	0.0	0.0
333	0.0	0.0
334	0.0	0.0
335	0.0	0.0
336	0.0	0.0
337	0.0	0.0
338	0.0	0.0
339	0.0	0.0
340	0.0	0.0
341	0.0	0.0
342	0.0	0.0
343	0.0	0.0
344	0.0	0.0
345	0.0	0.0
346	0.0	0.0
347	0.0	0.0
348	0.0	0.0
349	0.0	0.0
350	0.0	0.0
351	0.0	0.0
352	0.0	0.0
353	0.0	0.0
354	0.0	0.0
355	0.0	0.0
356	0.0	0.0
357	0.0	0.0
358	0.0	0.0
359	0.0	0.0
360	0.0	0.0
361	0.0	0.0
362	0.0	0.0
363	0.0	0.0
364	0.0	0.0
365	0.0	0.0
366	0.0	0.0
367	0.0	0.0
368	0.0	0.0
369	0.0	0.0
370	0.0	0.0
371	0.0	0.0
372	0.0	0.0
373	0.0	0.0
374	0.0	0.0
375	0.0	0.0
376	0.0	0.0
377	0.0	29.59
378	−1.50	87.46
379	8.88	100.00
380	46.04	100.00
381	76.89	100.00
382	80.00	100.00
383	82.14	94.64
384	85.39	83.07
385	87.70	88.51
386	92.00	79.83
387	92.00	61.66
388	94.58	66.77
389	102.88	60.00
390	106.00	72.76
391	109.18	8.43
392	111.91	(1)
393	82.00	(1)
394	79.33	(1)
395	71.15	(1)
396	68.84	(1)
397	78.35	49.17
398	82.00	70.00
399	80.65	69.46
400	92.85	60.00
401	97.48	60.00
402	98.95	60.00
403	100.74	60.00
404	103.68	43.17
405	104.00	10.04
406	80.62	20.00
407	83.37	20.00
408	81.06	15.29
409	80.00	10.00
410	76.86	(1)
411	74.11	(1)
412	71.60	(1)

Record (seconds)	Percent	
	Normalized revolutions per minute	Normalized torque
413	70.58	(1)
414	78.00	(1)
415	80.29	1.45
416	80.54	17.30
417	78.23	11.13
418	78.45	19.55
419	84.36	24.16
420	72.16	80.00
421	79.10	74.83
422	90.09	16.04
423	74.04	(1)
424	68.02	(1)
425	68.53	(1)
426	59.39	(1)
427	63.54	(1)
428	70.00	2.38
429	73.10	17.76
430	72.13	(1)
431	67.27	(1)
432	36.03	(1)
433	20.75	(1)
434	11.49	(1)
435	−2.09	0.0
436	−0.73	0.0
437	8.57	60.00
438	30.55	61.93
439	67.10	63.00
440	86.03	39.85
441	89.33	30.00
442	91.64	30.00
443	97.88	10.40
444	97.73	1.37
445	96.00	10.00
446	96.00	0.96
447	96.00	(1)
448	85.27	28.34
449	87.54	30.76
450	86.16	29.18
451	88.00	20.00
452	87.21	20.00
453	86.00	20.00
454	87.42	20.00
455	88.00	11.32
456	77.84	(1)
457	72.00	(1)
458	71.32	(1)
459	70.00	0.04
460	70.00	(1)
461	74.88	(1)
462	74.06	(1)
463	67.74	(1)
464	66.00	(1)
465	64.23	(1)
466	62.00	(1)
467	55.94	(1)
468	54.00	(1)
469	66.43	(1)
470	75.21	70.00
471	86.00	54.53
472	86.00	24.56
473	88.81	(1)
474	90.00	(1)
475	105.48	(1)
476	74.00	(1)
477	73.34	(1)
478	71.02	10.00
479	76.46	29.38
480	81.61	40.00
481	78.16	30.39
482	74.13	26.46
483	90.00	0.0
484	90.87	0.0
485	92.00	(1)
486	93.50	(1)
487	94.00	(1)
488	94.13	(1)
489	88.96	(1)
490	63.25	(1)
491	62.00	(1)
492	49.54	45.37
493	52.49	86.99
494	64.00	90.00
495	64.99	90.00
496	71.93	93.22
497	78.87	95.21
498	82.00	83.64
499	86.76	80.00
500	93.71	80.00
501	94.87	80.00
502	103.60	80.00
503	101.23	41.89
504	95.48	24.85
505	98.00	50.00
506	99.79	50.00
507	106.21	46.82
508	110.84	(1)
509	98.55	(1)
510	70.95	(1)
511	67.27	(1)
512	60.96	(1)
513	48.03	(1)
514	52.31	(1)
515	54.00	(1)
516	65.27	(1)
517	78.00	(1)
518	57.61	(1)
519	42.58	(1)
520	38.81	(1)
521	22.37	(1)
522	3.52	(1)
523	0.0	0.0
524	−1.46	36.39
525	−0.23	5.75
526	0.0	0.0
527	0.0	0.0
528	0.0	0.0
529	0.0	0.0
530	0.0	0.0
531	0.0	0.0
532	0.0	0.0
533	0.0	0.0
534	0.0	0.0
535	0.0	0.0
536	0.0	0.0
537	0.0	0.0
538	0.0	0.0
539	0.0	0.0
540	0.0	0.0
541	0.0	0.0
542	0.0	0.0
543	0.0	0.0
544	0.0	(1)
545	0.0	0.0
546	−0.75	0.0
547	−0.56	0.0
548	4.00	(1)
549	0.68	(1)
550	0.0	0.0
551	0.0	0.0
552	0.0	2.60
553	0.0	20.00
554	0.0	20.00

Record (seconds)	Percent	
	Normalized revolutions per minute	Normalized torque
555	0.0	7.96
556	0.0	0.0
557	0.0	0.0
558	0.0	78.53
559	1.85	60.00
560	11.10	63.88
561	16.00	70.00
562	30.05	70.00
563	42.88	70.00
564	56.10	70.00
565	63.39	66.52
566	70.66	59.94
567	72.98	80.00
568	77.87	86.46
569	88.03	90.00
570	90.00	90.00
571	92.23	100.00
572	94.00	100.00
573	94.86	100.00
574	96.00	100.00
575	97.49	100.00
576	108.84	100.00
577	110.00	83.92
578	104.77	(1)
579	87.50	(1)
580	90.00	0.0
581	91.38	(1)
582	81.84	(1)
583	65.99	(1)
584	63.68	(1)
585	60.73	(1)
586	57.05	(1)
587	53.47	(1)
588	50.42	(1)
589	44.31	(1)
590	37.58	37.91
591	33.48	20.00
592	31.16	20.00
593	28.85	20.00
594	22.13	20.00
595	9.31	(1)
596	0.0	0.0
597	0.0	0.0
598	0.0	0.0
599	0.0	0.0
600	0.0	0.0
601	0.0	0.0
602	0.0	0.0
603	0.0	0.0
604	0.0	0.0
605	0.0	0.0
606	2.52	6.30
607	10.30	17.87
608	13.89	20.00
609	20.20	20.00
610	24.07	22.59
611	33.33	17.50
612	40.30	(1)
613	47.85	(1)
614	66.00	7.78
615	68.00	10.93
616	67.59	32.04
617	66.00	40.00
618	67.04	40.00
619	68.00	40.00
620	68.00	48.33
621	75.93	99.53
622	78.00	100.00
623	78.00	100.00
624	77.07	100.00
625	76.00	100.00
626	76.00	100.00
627	76.00	100.00
628	75.63	100.00
629	73.00	97.50
630	76.81	90.00
631	80.26	90.00
632	83.44	90.00
633	84.00	98.79
634	84.00	100.00
635	83.61	100.00
636	82.00	100.00
637	83.02	94.91
638	86.67	90.00
639	89.65	90.00
640	90.00	99.81
641	89.45	100.00
642	86.00	100.00
643	86.00	95.47
644	87.22	90.00
645	88.00	90.00
646	88.00	80.74
647	88.00	79.17
648	88.00	77.21
649	88.00	100.00
650	88.00	94.45
651	88.00	90.00
652	88.00	90.00
653	90.00	90.00
654	89.63	90.00
655	88.68	90.00
656	90.00	90.00
657	90.00	90.00
658	91.63	81.86
659	92.00	80.00
660	90.00	81.29
661	89.43	92.86
662	87.11	100.00
663	86.00	100.00
664	86.00	100.00
665	89.66	100.00
666	90.00	99.27
667	90.46	90.00
668	92.78	90.00
669	95.09	90.00
670	100.22	82.97
671	102.00	80.00
672	102.00	70.18
673	102.00	80.00
674	97.34	50.07
675	87.02	(1)
676	86.00	(1)
677	73.12	22.19
678	75.77	39.62
679	75.76	48.80
680	75.11	37.23
681	78.00	34.34
682	80.37	40.00
683	77.51	47.49
684	81.44	50.00
685	82.13	39.36
686	84.00	27.79
687	84.00	16.21
688	84.00	15.36
689	85.39	26.93
690	86.00	30.00
691	86.00	30.08
692	85.67	40.00
693	84.65	40.00
694	86.00	35.20
695	87.28	30.00
696	88.00	22.05

Record (seconds)	Percent	
	Normalized revolutions per minute	Normalized torque
697	86.09	(1)
698	83.78	(1)
699	81.47	(1)
700	81.70	(1)
701	85.16	(1)
702	84.52	(1)
703	82.21	(1)
704	79.89	(1)
705	77.58	(1)
706	76.00	6.31
707	79.16	0.0
708	75.16	27.36
709	72.00	40.00
710	72.00	40.00
711	74.00	38.44
712	74.00	30.00
713	74.00	30.00
714	74.00	36.28
715	72.43	47.86
716	68.23	59.43
717	73.80	50.00
718	72.52	50.00
719	74.00	45.85
720	72.85	57.18
721	76.38	62.70
722	81.55	60.00
723	80.18	60.00
724	83.60	60.00
725	83.44	56.40
726	86.00	50.00
727	87.35	50.00
728	86.34	50.00
729	86.00	40.11
730	88.29	61.47
731	88.78	63.92
732	86.92	50.00
733	86.76	50.00
734	87.55	42.24
735	88.00	49.34
736	86.00	50.91
737	86.00	67.45
738	86.00	81.88
739	87.13	70.00
740	89.44	77.21
741	91.76	88.78
742	90.07	89.65
743	92.00	80.00
744	92.70	80.00
745	94.00	80.00
746	94.00	80.00
747	94.00	80.00
748	94.00	80.00
749	94.00	81.37
750	94.59	87.05
751	96.00	57.40
752	96.00	42.19
753	96.00	42.33
754	96.00	40.00
755	96.00	38.37
756	96.00	12.83
757	96.00	(1)
758	96.00	(1)
759	96.00	(1)
760	97.74	7.37
761	100.05	19.74
762	102.00	11.83
763	102.00	26.81
764	103.00	49.96
765	104.00	60.00
766	102.37	60.00
767	103.94	60.00
768	104.00	40.00
769	104.00	25.75
770	103.12	(1)
771	100.80	(1)
772	100.00	(1)
773	101.83	44.88
774	102.00	36.40
775	102.00	(1)
776	102.00	(1)
777	100.91	(1)
778	101.40	(1)
779	100.28	(1)
780	97.97	(1)
781	96.00	(1)
782	96.00	10.00
783	96.00	0.23
784	96.00	(1)
785	96.00	(1)
786	94.08	(1)
787	78.00	(1)
788	77.45	(1)
789	71.67	28.96
790	67.18	80.00
791	66.50	87.48
792	71.43	90.00
793	74.13	90.00
794	75.56	92.20
795	74.75	100.00
796	77.07	94.65
797	79.38	83.08
798	80.00	71.51
799	80.01	69.93
800	82.33	58.36
801	84.00	50.00
802	84.00	59.58
803	84.00	76.36
804	84.00	80.00
805	84.00	70.49
806	82.00	80.00
807	81.47	82.66
808	80.00	90.00
809	77.68	90.00
810	74.52	75.24
811	77.58	78.96
812	81.89	80.00
813	80.42	80.00
814	82.00	83.68
815	83.05	79.50
816	84.00	70.00
817	84.00	61.60
818	84.00	50.03
819	86.00	60.00
820	86.00	60.00
821	86.00	69.39
822	88.51	73.73
823	88.43	70.00
824	88.00	70.00
825	94.00	70.99
826	94.51	80.00
827	95.17	80.00
828	95.14	80.00
829	94.54	80.00
830	94.00	80.00
831	94.00	77.89
832	94.00	31.99
833	94.00	43.57
834	94.00	60.28
835	94.00	63.29
836	94.00	76.57
837	94.00	89.86
838	94.29	90.00

Record (seconds)	Percent	
	Normalized revolutions per minute	Normalized torque
839	97.80	87.00
840	102.91	80.00
841	104.00	73.85
842	104.00	62.28
843	104.00	69.29
844	106.00	70.00
845	106.00	62.70
846	106.00	40.00
847	104.88	40.00
848	104.00	32.85
849	104.00	30.00
850	104.00	0.30
851	103.63	11.87
852	100.62	13.12
853	98.00	5.01
854	96.68	10.00
855	96.00	(1)
856	96.00	(1)
857	96.00	(1)
858	95.43	(1)
859	94.00	(1)
860	94.00	(1)
861	95.52	5.18
862	97.83	(1)
863	98.00	(1)
864	98.00	(1)
865	97.22	(1)
866	96.00	6.35
867	96.00	12.98
868	96.00	10.00
869	95.93	10.00
870	92.00	10.00
871	92.00	10.00
872	92.98	14.89
873	94.00	13.54
874	90.79	42.12
875	88.08	40.40
876	86.23	30.00
877	88.00	32.75
878	87.14	44.32
879	84.82	50.00
880	82.51	50.00
881	82.00	50.00
882	82.12	40.00
883	83.13	35.64
884	80.00	20.00
885	84.26	51.95
886	86.62	66.21
887	84.31	60.00
888	81.99	9.96
889	79.35	1.61
890	75.36	19.56
891	73.05	40.00
892	70.73	8.35
893	68.42	(1)
894	47.15	8.95
895	35.79	10.00
896	32.95	7.38
897	29.16	(1)
898	16.47	(1)
899	2.13	(1)
900	0.0	0.0
901	0.0	0.0
902	0.0	0.0
903	0.0	0.0
904	0.0	0.0
905	0.0	0.0
906	0.0	0.0
907	0.0	0.0
908	0.0	0.0
909	0.0	0.0
910	0.0	0.0
911	0.0	0.0
912	0.0	0.0
913	0.0	0.0
914	0.0	0.0
915	0.0	0.0
916	0.0	0.0
917	0.0	0.0
918	0.0	0.0
919	0.0	0.0
920	0.0	0.0
921	0.0	0.0
922	0.0	0.0
923	0.0	0.0
924	0.0	0.0
925	0.0	0.0
926	0.0	0.0
927	0.0	3.67
928	0.0	47.69
929	3.11	59.41
930	9.09	84.54
931	15.62	80.00
932	33.49	80.00
933	37.93	79.29
934	31.20	38.25
935	21.99	26.67
936	30.00	15.10
937	22.23	16.47
938	19.61	28.05
939	20.00	20.38
940	18.33	(1)
941	6.55	(1)
942	15.82	(1)
943	23.63	(1)
944	17.51	(1)
945	14.19	62.52
946	16.64	69.36
947	27.77	60.00
948	37.03	63.79
949	47.36	75.36
950	54.77	80.00
951	57.70	80.00
952	54.03	79.92
953	58.00	65.03
954	58.65	43.23
955	62.88	50.00
956	69.83	50.00
957	72.00	42.05
958	75.81	40.00
959	84.22	42.20
960	83.86	41.28
961	80.55	(1)
962	80.51	(1)
963	78.00	(1)
964	79.79	(1)
965	80.33	30.54
966	85.58	42.12
967	81.78	50.00
968	78.00	50.00
969	80.74	43.16
970	92.10	73.65
971	88.01	(1)
972	84.00	(1)
973	84.00	(1)
974	81.17	(1)
975	70.46	(1)
976	66.00	13.57
977	62.23	29.43
978	64.00	20.00
979	63.48	17.42
980	60.34	10.00

Record (seconds)	Percent	
	Normalized revolutions per minute	Normalized torque
981	56.85	10.00
982	56.00	(1)
983	52.45	(1)
984	39.91	10.00
985	36.38	10.00
986	30.00	10.00
987	27.93	10.00
988	26.00	16.74
989	27.66	3.36
990	28.00	(1)
991	27.41	(1)
992	20.96	(1)
993	12.15	(1)
994	3.81	(1)
995	0.0	0.0
996	0.0	0.0
997	0.0	0.91
998	0.0	7.52
999	0.0	0.0
1,000	0.0	0.0
1,001	0.0	0.0
1,002	0.0	0.0
1,003	0.0	0.0
1,004	0.0	0.0
1,005	0.0	0.0
1,006	0.0	0.0
1,007	0.0	0.0
1,008	0.0	0.0
1,009	0.0	0.0
1,010	0.0	0.0
1,011	0.0	0.0
1,012	0.0	0.0
1,013	0.0	0.0
1,014	0.0	0.0
1,015	0.0	0.0
1,016	0.0	0.0
1,017	0.0	0.0
1,018	0.0	0.0
1,019	0.0	0.0
1,020	0.0	0.0
1,021	0.0	0.0
1,022	0.0	0.0
1,023	0.0	0.0
1,024	0.0	0.0
1,025	0.0	0.0
1,026	0.0	0.0
1,027	0.0	0.0
1,028	0.0	0.0
1,029	0.0	0.0
1,030	0.0	0.0
1,031	1.77	(1)
1,032	1.60	(1)
1,033	0.0	0.0
1,034	0.0	0.0
1,035	2.14	9.28
1,036	3.08	0.0
1,037	0.0	0.0
1,038	0.0	0.0
1,039	0.0	0.0
1,040	0.0	0.0
1,041	0.0	0.0
1,042	0.0	0.0
1,043	0.0	0.0
1,044	0.0	0.0
1,045	0.0	0.0
1,046	0.0	0.0
1,047	0.0	0.0
1,048	0.0	0.0
1,049	0.0	5.51
1,050	0.0	11.34
1,051	0.0	0.0
1,052	0.0	0.0
1,053	0.0	0.0
1,054	0.0	0.0
1,055	0.0	0.0
1,056	0.0	0.0
1,057	0.0	0.0
1,058	0.0	0.0
1,059	0.0	0.0
1,060	0.0	0.21
1,061	0.0	30.00
1,062	0.0	26.78
1,063	0.0	20.00
1,064	0.0	20.00
1,065	0.0	4.12
1,066	0.0	0.0
1,067	0.0	0.0
1,068	0.0	0.0
1,069	0.0	0.0
1,070	0.0	0.0
1,071	0.0	0.0
1,072	0.0	0.0
1,073	0.0	0.0
1,074	0.0	0.0
1,075	0.0	0.0
1,076	0.0	0.0
1,077	0.0	0.0
1,078	0.0	0.0
1,079	0.0	0.0
1,080	0.0	0.0
1,081	0.0	0.0
1,082	0.0	0.0
1,083	0.0	0.0
1,084	0.0	0.0
1,085	0.0	0.0
1,086	0.0	20.00
1,087	0.0	20.00
1,088	0.0	11.73
1,089	0.0	0.0
1,090	0.0	0.0
1,091	0.0	0.0
1,092	0.0	0.0
1,093	0.0	0.0
1,094	0.0	0.0
1,095	0.0	0.0
1,096	0.0	0.0
1,097	0.0	0.0
1,098	0.0	0.0
1,099	0.0	0.0
1,100	0.0	0.0
1,101	0.0	0.0
1,102	0.0	0.0
1,103	0.0	0.0
1,104	0.0	0.0
1,105	0.0	0.0
1,106	0.0	0.0
1,107	0.0	0.0
1,108	0.0	0.0
1,109	0.0	0.0
1,110	0.0	0.0
1,111	0.0	0.0
1,112	0.0	0.0
1,113	0.0	0.0
1,114	0.0	0.0
1,115	0.0	0.0
1,116	0.0	73.41
1,117	0.0	90.00
1,118	31.30	81.30
1,119	41.15	90.00
1,120	44.00	90.00
1,121	46.41	90.00
1,122	51.04	82.41

Record (seconds)	Percent	
	Normalized revolutions per minute	Normalized torque
1,123	66.66	80.00
1,124	75.03	90.00
1,125	89.85	90.00
1,126	96.78	93.88
1,127	96.91	50.94
1,128	94.60	17.02
1,129	99.16	28.60
1,130	100.00	39.83
1,131	100.00	30.00
1,132	100.00	26.69
1,133	100.98	20.00
1,134	100.71	20.00
1,135	100.00	36.06
1,136	96.16	40.00
1,137	95.77	30.00
1,138	94.55	32.75
1,139	96.86	35.68
1,140	99.18	30.00
1,141	100.00	44.93
1,142	101.81	50.00
1,143	86.54	([1])
1,144	63.56	([1])
1,145	56.00	([1])
1,146	46.00	([1])
1,147	41.86	45.18
1,148	38.31	78.47
1,149	35.98	80.00
1,150	31.03	80.00
1,151	25.36	80.00
1,152	23.05	60.97
1,153	18.20	27.34
1,154	12.84	43.71
1,155	10.10	68.95
1,156	3.79	68.95
1,157	1.48	44.28
1,158	0.0	0.0
1,159	0.0	0.0
1,160	0.0	0.0
1,161	0.0	0.0
1,162	0.0	0.0
1,163	0.0	0.0
1,164	0.0	0.0
1,165	0.0	24.97
1,166	0.0	17.16
1,167	0.0	6.20
1,168	0.0	10.00
1,169	0.0	10.00
1,170	0.0	0.0
1,171	0.0	0.0
1,172	0.0	0.0
1,173	0.0	0.0
1,174	0.0	0.0
1,175	0.0	0.0
1,176	0.0	0.0
1,177	0.0	0.0
1,178	0.0	0.0
1,179	0.0	0.0
1,180	0.0	0.0
1,181	0.0	0.0
1,182	0.0	0.0
1,183	0.0	0.0
1,184	0.0	0.0
1,185	0.0	0.0
1,186	0.0	0.0
1,187	0.0	0.0
1,188	0.0	0.0
1,189	0.0	0.0
1,190	0.0	0.0
1,191	0.0	0.0
1,192	0.0	0.0
1,193	0.0	0.0
1,194	0.0	0.0
1,195	0.0	0.0
1,196	0.0	0.0
1,197	0.0	0.0
1,198	0.0	0.0
1,199	0.0	0.0

[1] Closed throttle motoring.

(3) Optional EPA Engine Dynamometer Schedule for Heavy-duty Otto-cycle engines.

Record (seconds)	Percent	
	Normalized revolutions per minute	Normalized torque
1	0.0	0.0
2	0.0	0.0
3	0.0	0.0
4	0.0	0.0
5	0.0	0.0
6	0.0	0.0
7	0.0	0.0
8	0.0	0.0
9	0.0	0.0
10	0.0	0.0
11	0.0	0.0
12	0.0	0.0
13	0.0	0.0
14	0.0	0.0
15	0.0	0.0
16	0.0	0.0
17	0.0	0.0
18	0.0	0.0
19	0.0	0.0
20	0.0	0.0
21	0.0	0.0
22	0.0	0.0
23	0.0	0.0
24	0.0	0.0
25	−1.78	44.40
26	0.0	85.35
27	4.25	100.00
28	27.47	100.00
29	42.96	100.00
30	45.79	100.00
31	48.11	99.46
32	50.42	90.00
33	52.74	75.23
34	54.00	50.00
35	44.42	8.96
36	45.05	−10.00
37	46.00	9.99
38	37.69	−10.00
39	31.61	5.68
40	22.94	35.29
41	24.00	4.87
42	20.86	−10.00
43	12.45	−10.00
44	6.00	−10.00
45	6.52	−10.00
46	7.17	−10.00
47	2.56	−10.00
48	0.0	0.0
49	0.0	0.0
50	0.0	0.0
51	0.0	10.11
52	4.32	46.40
53	8.90	45.17
54	1.95	50.00

Record (seconds)	Percent	
	Normalized revolutions per minute	Normalized torque
55	3.33	41.68
56	4.00	89.46
57	13.76	55.60
58	26.43	26.96
59	33.85	6.16
60	36.00	−10.00
61	34.45	−10.00
62	34.00	−10.00
63	35.64	−10.00
64	32.99	27.39
65	36.00	80.00
66	41.63	74.37
67	60.41	26.76
68	48.44	−10.00
69	43.86	−10.00
70	40.39	−10.00
71	38.50	4.01
72	35.05	30.00
73	40.66	16.70
74	43.64	26.45
75	45.96	−10.00
76	47.10	−10.00
77	49.29	−10.00
78	37.10	−10.00
79	36.00	−10.00
80	34.47	−10.00
81	32.15	−10.00
82	31.67	−10.00
83	28.48	13.89
84	32.38	90.00
85	36.00	90.00
86	41.69	90.00
87	45.74	90.00
88	49.95	80.00
89	49.10	80.00
90	50.59	62.97
91	45.99	34.98
92	42.76	7.23
93	35.12	−10.00
94	32.06	67.92
95	35.53	62.55
96	46.57	68.60
97	49.77	48.85
98	52.00	60.00
99	58.06	60.00
100	63.66	23.42
101	64.14	17.84
102	59.58	3.76
103	38.00	42.26
104	39.09	30.00
105	40.00	30.00
106	34.85	47.18
107	32.03	10.33
108	34.00	33.48
109	34.00	50.00
110	33.02	20.69
111	25.54	−10.00
112	15.57	−10.00
113	14.00	−10.00
114	14.47	27.64
115	18.00	4.49
116	17.13	−10.00
117	16.00	−10.00
118	10.02	−10.00
119	9.81	−10.00
120	5.88	−10.00
121	4.00	−10.00
122	4.00	−10.00
123	2.93	−10.00
124	0.62	−10.00
125	0.0	0.0
126	0.0	0.0
127	0.0	0.0
128	0.0	0.0
129	0.0	0.0
130	0.0	10.00
131	0.0	10.00
132	0.0	29.02
133	0.0	27.83
134	0.0	7.34
135	0.0	0.0
136	0.0	0.0
137	0.0	0.0
138	0.0	0.0
139	0.0	0.0
140	0.0	0.0
141	0.0	0.0
142	0.0	0.0
143	0.0	0.0
144	0.0	0.0
145	0.0	0.0
146	2.00	0.0
147	1.38	0.0
148	0.0	0.0
149	0.0	6.27
150	0.0	2.16
151	0.0	0.0
152	0.0	0.0
153	0.0	0.0
154	0.83	−10.00
155	2.00	−10.00
156	0.54	−10.00
157	0.0	0.0
158	0.0	0.0
159	0.0	0.0
160	0.0	0.0
161	0.0	0.0
162	0.0	0.0
163	0.0	0.0
164	0.0	0.0
165	0.0	0.0
166	0.0	0.0
167	0.0	22.01
168	1.23	72.29
169	6.63	80.00
170	17.29	89.29
171	22.17	90.00
172	24.00	82.70
173	24.00	31.96
174	24.00	−10.00
175	22.57	−10.00
176	22.00	−10.00
177	13.88	−10.00
178	10.00	−10.00
179	9.31	−10.00
180	3.99	−10.00
181	0.0	0.0
182	0.0	0.0
183	0.0	0.0
184	0.0	0.0
185	0.0	0.0
186	0.0	0.0
187	0.0	0.0
188	0.0	0.0
189	0.0	0.0
190	0.0	0.0
191	0.0	0.0
192	0.0	0.0
193	0.0	0.0
194	0.0	0.0
195	0.0	0.0
196	0.0	0.0

Record (seconds)	Percent	
	Normalized revolutions per minute	Normalized torque
197	0.0	0.0
198	0.0	0.0
199	0.0	0.0
200	0.0	0.0
201	0.0	0.0
202	0.0	0.0
203	0.0	0.0
204	−2.52	6.30
205	−4.22	15.28
206	0.0	10.00
207	0.0	10.00
208	0.0	10.00
209	0.0	75.93
210	0.0	32.22
211	1.67	35.00
212	15.48	29.82
213	25.46	−10.00
214	24.22	−10.00
215	23.44	−10.00
216	12.41	80.00
217	8.94	83.61
218	7.26	84.82
219	16.70	80.00
220	24.67	63.33
221	0.24	79.81
222	0.0	8.52
223	0.0	0.0
224	0.0	0.0
225	0.0	0.0
226	0.0	0.0
227	0.0	0.0
228	0.0	0.0
229	0.0	0.0
230	0.0	0.0
231	0.0	0.0
232	0.0	0.0
233	0.0	17.59
234	0.0	19.63
235	0.0	10.00
236	0.0	10.00
237	0.0	10.00
238	0.0	3.34
239	0.0	0.0
240	0.0	0.0
241	0.0	0.0
242	0.0	0.0
243	0.0	0.0
244	0.0	0.0
245	0.0	0.0
246	0.0	0.0
247	0.0	0.0
248	0.0	0.0
249	0.0	0.0
250	0.0	0.0
251	0.0	0.0
252	0.0	0.0
253	0.0	0.0
254	0.0	0.0
255	0.0	0.0
256	0.0	0.0
257	0.0	0.0
258	0.0	0.0
259	0.0	0.0
260	0.0	0.0
261	0.0	0.0
262	0.0	0.0
263	0.0	0.0
264	0.0	0.0
265	0.0	0.0
266	0.0	0.0
267	0.0	0.0

Record (seconds)	Percent	
	Normalized revolutions per minute	Normalized torque
268	0.0	0.0
269	0.0	0.0
270	0.0	0.0
271	0.0	0.0
272	0.0	0.0
273	0.0	0.0
274	0.0	0.0
275	0.0	0.0
276	0.0	0.0
277	0.0	0.0
278	0.0	0.0
279	0.0	0.0
280	0.0	0.0
281	0.0	4.17
282	1.15	10.00
283	2.00	10.00
284	0.22	10.00
285	0.0	0.0
286	0.0	0.0
287	0.0	0.0
288	0.0	0.0
289	0.0	0.0
290	0.0	0.0
291	0.0	0.0
292	0.0	0.0
293	0.0	0.0
294	0.0	0.0
295	0.0	0.0
296	0.0	0.0
297	0.0	0.0
298	0.0	0.0
299	0.0	0.0
300	0.0	4.07
301	0.0	10.00
302	0.0	17.22
303	0.0	20.00
304	0.0	20.37
305	2.33	31.94
306	16.22	36.48
307	24.00	24.91
308	24.00	13.34
309	19.06	10.00
310	18.00	−10.00
311	17.17	−10.00
312	9.04	−10.00
313	1.09	−10.00
314	0.0	0.0
315	0.0	0.0
316	0.0	0.0
317	0.0	0.0
318	0.0	0.0
319	0.0	0.0
320	0.0	0.0
321	0.0	0.0
322	0.0	0.0
323	0.0	0.82
324	0.37	41.08
325	2.68	90.00
326	6.00	94.99
327	11.94	100.00
328	15.63	100.00
329	41.26	90.28
330	46.26	90.00
331	44.56	67.08
332	36.00	1.12
333	27.58	50.12
334	23.52	90.00
335	24.00	90.00
336	26.29	70.00
337	30.00	65.38
338	30.00	34.47

Record (seconds)	Percent	
	Normalized revolutions per minute	Normalized torque
339	30.00	10.00
340	30.00	10.00
341	30.00	10.00
342	30.18	60.00
343	40.00	58.25
344	40.67	50.00
345	41.02	50.00
346	40.00	50.00
347	41.61	50.00
348	42.00	50.00
349	46.00	50.00
350	48.22	50.00
351	59.21	58.69
352	67.18	70.00
353	71.00	70.00
354	72.00	70.00
355	72.13	68.08
356	74.89	28.94
357	68.91	−10.00
358	49.71	−10.00
359	41.84	−10.00
360	38.30	−10.00
361	35.93	−10.00
362	28.00	−10.00
363	23.48	−10.00
364	10.16	−10.00
365	4.72	−10.00
366	0.82	5.90
367	−9.53	19.53
368	2.20	45.60
369	20.53	7.33
370	21.15	0.0
371	17.67	−10.00
372	13.04	−10.00
373	8.41	79.70
374	10.33	100.00
375	17.27	100.00
376	22.00	100.00
377	25.16	100.00
378	29.37	100.00
379	36.73	66.35
380	40.00	−10.00
381	23.50	−10.00
382	9.37	−10.00
383	8.00	−10.00
384	6.74	−10.00
385	2.86	−10.00
386	0.11	−10.00
387	0.0	0.0
388	0.0	0.0
389	0.0	0.0
390	0.0	0.0
391	0.0	0.0
392	0.0	0.0
393	0.0	0.0
394	0.0	0.0
395	0.0	0.0
396	0.0	0.0
397	0.0	0.0
398	0.0	0.0
399	0.0	0.0
400	0.0	0.0
401	0.0	0.0
402	0.0	0.0
403	0.0	0.0
404	0.0	0.0
405	0.0	0.0
406	0.0	0.0
407	0.0	0.0
408	0.0	0.0
409	0.0	0.0
410	0.0	0.0
411	0.0	0.0
412	0.0	0.0
413	0.0	0.0
414	0.0	0.0
415	0.0	0.0
416	0.0	0.0
417	0.0	0.0
418	0.0	0.0
419	2.27	20.00
420	2.82	14.11
421	0.0	0.0
422	0.0	0.0
423	0.0	0.0
424	0.0	0.0
425	0.0	0.0
426	0.0	0.0
427	0.0	0.0
428	0.0	0.0
429	0.0	0.0
430	0.0	0.0
431	0.26	0.78
432	16.60	31.83
433	45.32	29.78
434	43.00	10.00
435	40.69	10.00
436	35.12	10.00
437	28.18	19.70
438	28.26	47.45
439	30.00	30.00
440	30.00	30.00
441	30.00	30.00
442	34.54	30.00
443	36.00	30.00
444	36.43	30.00
445	43.84	30.00
446	50.00	30.00
447	50.00	24.56
448	50.00	20.00
449	50.00	−10.00
450	37.97	−10.00
451	35.30	−10.00
452	30.68	−10.00
453	27.02	−10.00
454	26.00	−10.00
455	26.00	−10.00
456	20.24	−10.00
457	14.00	−10.00
458	13.45	18.27
459	9.40	52.99
460	10.72	81.81
461	15.50	97.48
462	19.62	100.00
463	20.25	100.00
464	25.76	100.00
465	35.02	100.00
466	42.14	94.65
467	44.00	90.00
468	45.70	90.00
469	51.99	60.00
470	50.00	60.00
471	51.29	63.22
472	54.96	70.00
473	56.00	70.00
474	62.35	38.25
475	71.61	30.00
476	76.22	50.00
477	78.00	50.00
478	78.00	41.53
479	55.93	12.58
480	38.52	0.0

Record (seconds)	Percent	
	Normalized revolutions per minute	Normalized torque
481	34.42	71.65
482	36.11	79.47
483	38.84	67.90
484	42.74	60.00
485	44.00	54.75
486	49.46	36.35
487	52.00	30.00
488	32.05	−10.00
489	25.69	0.0
490	24.00	0.0
491	24.00	−10.00
492	20.24	−10.00
493	10.16	68.43
494	8.00	80.58
495	10.20	80.99
496	13.54	90.00
497	18.00	94.13
498	20.28	100.00
499	22.00	100.00
500	23.77	91.15
501	28.08	90.00
502	30.00	86.01
503	32.85	80.70
504	32.86	100.00
505	33.37	100.00
506	36.00	100.00
507	51.77	100.00
508	60.57	95.72
509	64.00	70.00
510	64.91	70.00
511	75.83	70.00
512	82.00	70.00
513	85.72	51.42
514	86.17	49.14
515	88.49	35.13
516	90.00	15.99
517	91.12	26.74
518	92.00	32.85
519	93.74	30.00
520	89.29	−10.00
521	66.00	41.87
522	67.38	56.88
523	80.02	54.96
524	93.95	66.34
525	97.63	63.69
526	94.11	60.00
527	85.66	−10.00
528	70.00	−10.00
529	69.11	−10.00
530	66.80	−10.00
531	64.48	−10.00
532	53.00	44.98
533	52.73	49.27
534	62.00	40.00
535	62.00	43.88
536	64.18	44.55
537	53.36	4.88
538	46.28	15.79
539	46.00	19.83
540	45.65	10.00
541	45.99	10.00
542	48.05	10.00
543	44.71	3.54
544	48.82	−10.00
545	51.92	66.82
546	47.53	−10.00
547	36.31	9.23
548	17.73	55.68
549	29.43	38.22
550	36.00	37.46
551	36.00	40.00
552	34.00	40.00
553	34.00	40.00
554	34.00	36.25
555	38.26	24.68
556	43.38	61.38
557	50.78	46.12
558	52.00	19.92
559	52.32	0.0
560	52.09	3.19
561	48.00	10.00
562	48.00	10.00
563	48.00	10.00
564	30.94	19.48
565	28.00	20.00
566	28.00	20.00
567	28.00	15.81
568	28.00	10.00
569	26.53	10.00
570	26.00	10.00
571	23.71	−10.00
572	17.59	−10.00
573	11.65	−10.00
574	1.92	−10.00
575	0.0	0.0
576	0.0	0.0
577	0.0	0.0
578	0.0	0.0
579	0.0	0.0
580	0.0	0.0
581	0.0	0.0
582	0.0	0.0
583	1.26	25.19
584	6.72	47.87
585	13.67	40.56
586	16.20	80.00
587	18.52	80.00
588	25.83	75.83
589	35.15	70.00
590	38.93	77.31
591	41.78	80.00
592	40.00	10.00
593	40.00	20.18
594	40.00	52.78
595	40.00	34.82
596	40.00	30.00
597	40.00	38.33
598	40.00	30.09
599	38.30	100.00
600	40.61	100.00
601	42.00	100.00
602	42.00	100.00
603	42.00	100.00
604	42.00	100.00
605	42.00	100.00
606	42.50	97.50
607	43.19	85.93
608	43.13	85.65
609	44.00	90.00
610	44.00	90.00
611	44.00	80.00
612	44.00	80.00
613	44.70	80.00
614	46.00	74.91
615	46.00	63.34
616	46.00	60.00
617	46.00	60.00
618	44.00	10.00
619	44.00	10.00
620	43.09	10.00
621	42.00	10.00
622	42.00	10.00

Record (seconds)	Percent	
	Normalized revolutions per minute	Normalized torque
623	43.85	19.26
624	50.00	90.00
625	50.00	90.00
626	50.00	90.00
627	50.00	90.00
628	50.00	90.00
629	48.26	90.00
630	48.00	89.73
631	48.37	80.00
632	49.32	80.00
633	48.00	80.00
634	48.00	80.00
635	48.00	80.00
636	48.00	70.28
637	48.00	70.00
638	48.00	70.00
639	48.00	74.44
640	48.00	61.96
641	49.52	50.00
642	50.00	50.00
643	50.00	40.00
644	50.00	44.62
645	50.78	60.00
646	52.00	49.09
647	52.00	40.00
648	52.00	40.00
649	52.04	40.89
650	54.00	90.00
651	54.00	90.00
652	54.00	85.10
653	55.29	73.53
654	56.00	70.00
655	56.00	70.00
656	56.00	60.00
657	56.00	57.23
658	56.00	50.00
659	56.00	38.17
660	56.00	30.00
661	56.00	30.00
662	54.00	39.36
663	54.00	27.79
664	54.00	20.00
665	54.00	20.00
666	54.00	20.00
667	54.00	11.49
668	54.00	0.08
669	54.00	13.31
670	54.00	30.00
671	54.96	30.00
672	57.28	30.00
673	56.41	30.00
674	57.91	30.00
675	58.22	36.60
676	60.00	90.00
677	60.00	90.00
678	60.00	95.82
679	60.00	92.60
680	60.00	90.00
681	60.00	90.00
682	60.42	90.00
683	62.74	90.00
684	65.05	90.00
685	66.00	83.16
686	66.00	71.59
687	66.00	70.00
688	66.00	70.00
689	66.00	73.14
690	66.00	80.00
691	66.00	86.28
692	66.00	90.00
693	66.00	90.00
694	68.20	100.00
695	70.00	100.00
696	70.00	100.00
697	70.00	100.00
698	74.38	100.00
699	76.00	100.00
700	72.09	100.00
701	73.60	100.00
702	72.00	100.00
703	72.00	100.00
704	72.00	100.00
705	72.00	100.00
706	72.00	100.00
707	72.29	100.00
708	73.39	100.00
709	72.92	100.00
710	74.00	100.00
711	74.00	100.00
712	77.73	100.00
713	78.00	100.00
714	77.50	100.00
715	76.00	100.00
716	76.00	100.00
717	76.00	100.00
718	72.49	100.00
719	71.79	100.00
720	67.16	100.00
721	72.70	100.00
722	75.02	100.00
723	73.34	100.00
724	73.64	91.78
725	74.00	31.21
726	78.27	28.63
727	80.00	17.05
728	80.00	5.48
729	80.00	−10.00
730	80.00	−10.00
731	80.00	63.93
732	84.00	80.00
733	85.43	82.39
734	87.62	93.96
735	84.00	100.00
736	84.00	100.00
737	84.00	91.32
738	86.00	100.00
739	86.73	100.00
740	90.00	96.59
741	91.99	90.00
742	94.00	90.00
743	95.63	81.87
744	96.00	89.70
745	100.00	98.72
746	100.57	78.60
747	102.88	50.00
748	104.00	73.99
749	104.00	90.00
750	104.00	25.98
751	103.71	20.00
752	99.54	20.00
753	98.00	20.00
754	99.09	25.44
755	98.60	65.08
756	103.15	80.00
757	100.03	80.00
758	102.35	80.00
759	104.00	73.38
760	104.00	55.11
761	101.42	30.62
762	98.39	11.97
763	57.65	−10.00
764	58.00	−10.00

Record (seconds)	Percent	
	Normalized revolutions per minute	Normalized torque
765	57.45	−10.00
766	56.00	−10.00
767	56.00	−10.00
768	56.00	27.39
769	56.00	40.00
770	56.00	50.00
771	56.00	45.60
772	56.00	33.77
773	56.00	40.00
774	60.15	5.40
775	62.00	−10.00
776	62.00	−10.00
777	62.00	41.64
778	62.00	59.65
779	62.00	75.21
780	62.00	76.36
781	62.00	80.00
782	62.00	80.00
783	62.00	80.00
784	62.00	80.00
785	61.15	80.00
786	60.00	80.00
787	60.00	87.38
788	60.00	90.00
789	60.00	90.00
790	60.00	90.00
791	60.00	90.00
792	60.00	90.00
793	60.00	83.17
794	60.00	80.00
795	60.00	89.97
796	62.31	90.00
797	64.00	86.88
798	64.00	80.00
799	64.00	80.00
800	64.00	80.00
801	64.00	80.00
802	66.00	70.00
803	66.51	70.00
804	68.00	65.87
805	68.00	60.00
806	68.00	60.00
807	73.31	86.55
808	74.00	90.00
809	74.00	90.00
810	73.29	90.00
811	72.00	84.86
812	73.34	73.29
813	74.00	70.00
814	72.03	70.00
815	71.71	50.00
816	70.00	50.00
817	70.00	50.00
818	68.77	56.15
819	68.00	60.00
820	68.00	60.00
821	68.00	58.28
822	68.00	40.00
823	68.00	48.01
824	68.00	60.00
825	68.00	60.00
826	68.00	60.00
827	68.00	60.00
828	68.00	61.87
829	68.00	70.00
830	69.00	70.00
831	70.00	70.00
832	70.00	70.00
833	70.00	70.00
834	70.00	70.00
835	70.00	70.00
836	70.00	70.00
837	73.61	70.00
838	76.00	62.41
839	76.00	60.00
840	76.00	100.00
841	76.92	100.00
842	80.78	100.00
843	82.00	100.00
844	83.40	100.00
845	84.00	100.00
846	83.97	90.00
847	82.35	90.00
848	85.33	93.31
849	89.95	100.00
850	88.13	100.00
851	89.21	100.00
852	95.76	100.00
853	100.23	100.00
854	102.00	100.00
855	104.59	100.00
856	112.71	100.00
857	113.01	100.00
858	112.00	100.00
859	104.00	−10.00
860	103.56	−10.00
861	102.75	−10.00
862	102.94	−10.00
863	99.24	−10.00
864	94.61	−10.00
865	93.99	−10.00
866	92.32	−10.00
867	93.36	−10.00
868	92.00	−10.00
869	90.73	−10.00
870	88.42	−10.00
871	84.21	−10.00
872	82.00	10.00
873	82.00	7.38
874	82.00	−10.00
875	82.00	−10.00
876	68.79	48.69
877	64.00	70.00
878	64.00	70.00
879	58.66	67.95
880	37.27	60.00
881	34.96	60.00
882	32.65	73.54
883	30.33	80.00
884	28.02	80.00
885	25.70	50.00
886	23.39	37.76
887	21.07	10.00
888	18.76	10.00
889	14.89	−10.00
890	12.13	−10.00
891	5.45	−10.00
892	0.0	0.0
893	0.0	0.0
894	0.0	0.0
895	0.0	0.0
896	0.0	0.0
897	0.0	0.0
898	0.0	0.0
899	0.0	0.0
900	0.0	0.0
901	0.0	0.0
902	0.0	0.0
903	0.0	0.0
904	0.0	0.0
905	0.0	0.0
906	0.0	0.0

Record (seconds)	Percent	
	Normalized revolutions per minute	Normalized torque
907	0.0	0.0
908	0.0	0.0
909	0.0	0.0
910	0.0	0.0
911	0.0	0.0
912	0.0	0.0
913	0.0	0.0
914	0.0	0.0
915	0.0	0.0
916	0.0	0.0
917	0.0	0.0
918	0.0	0.0
919	0.0	0.0
920	−1.78	44.40
921	0.0	85.35
922	4.25	100.00
923	27.47	100.00
924	42.96	100.00
925	45.79	100.00
926	48.11	99.46
927	50.42	90.00
928	52.74	75.23
929	54.00	50.00
930	44.42	8.96
931	45.05	−10.00
932	46.00	9.99
933	37.69	−10.00
934	31.61	5.68
935	22.94	35.29
936	24.00	4.87
937	20.86	−10.00
938	12.45	−10.00
939	6.00	−10.00
940	6.52	−10.00
941	7.17	−10.00
942	2.56	−10.00
943	0.0	0.0
944	0.0	0.0
945	0.0	0.0
946	0.0	10.11
947	4.32	46.40
948	8.90	45.17
949	1.95	50.00
950	3.33	41.68
951	4.00	89.46
952	13.76	55.60
953	26.43	26.96
954	33.85	6.16
955	36.00	−10.00
956	34.45	−10.00
957	34.00	−10.00
958	35.64	−10.00
959	32.99	27.39
960	36.00	80.00
961	41.63	74.37
962	60.41	26.76
963	48.44	−10.00
964	43.86	−10.00
965	40.39	−10.00
966	38.50	4.01
967	35.05	30.00
968	40.66	16.70
969	43.64	26.45
970	45.96	−10.00
971	47.10	−10.00
972	49.29	−10.00
973	37.10	−10.00
974	36.00	−10.00
975	34.47	−10.00
976	32.15	−10.00
977	31.67	−10.00
978	28.48	13.89
979	32.38	90.00
980	36.00	90.00
981	41.69	90.00
982	45.74	90.00
983	49.95	80.00
984	49.10	80.00
985	50.59	62.97
986	45.99	34.98
987	42.76	7.23
988	35.12	−10.00
989	32.06	67.92
990	35.53	62.55
991	46.57	68.60
992	49.77	48.85
993	52.00	60.00
994	58.06	60.00
995	63.66	23.42
996	64.14	17.84
997	59.58	3.76
998	38.00	42.26
999	39.09	30.00
1,000	40.00	30.00
1,001	34.85	47.18
1,002	32.03	10.33
1,003	34.00	33.48
1,004	34.00	50.00
1,005	33.02	20.69
1,006	25.54	−10.00
1,007	15.57	−10.00
1,008	14.00	−10.00
1,009	14.47	27.64
1,010	18.00	4.49
1,011	17.13	−10.00
1,012	16.00	−10.00
1,013	10.02	−10.00
1,014	9.81	−10.00
1,015	5.88	−10.00
1,016	4.00	−10.00
1,017	4.00	−10.00
1,018	2.93	−10.00
1,019	0.62	−10.00
1,020	0.0	0.0
1,021	0.0	0.0
1,022	0.0	0.0
1,023	0.0	0.0
1,024	0.0	0.0
1,025	0.0	10.00
1,026	0.0	10.00
1,027	0.0	29.02
1,028	0.0	27.83
1,029	0.0	7.34
1,030	0.0	0.0
1,031	0.0	0.0
1,032	0.0	0.0
1,033	0.0	0.0
1,034	0.0	0.0
1,035	0.0	0.0
1,036	0.0	0.0
1,037	0.0	0.0
1,038	0.0	0.0
1,039	0.0	0.0
1,040	0.0	0.0
1,041	2.00	0.0
1,042	1.38	0.0
1,043	0.0	0.0
1,044	0.0	6.27
1,045	0.0	2.16
1,046	0.0	0.0
1,047	0.0	0.0
1,048	0.0	0.0

Record (seconds)	Percent	
	Normalized revolutions per minute	Normalized torque
1,049	0.83	−10.00
1,050	2.00	−10.00
1,051	0.54	−10.00
1,052	0.0	0.0
1,053	0.0	0.0
1,054	0.0	0.0
1,055	0.0	0.0
1,056	0.0	0.0
1,057	0.0	0.0
1,058	0.0	0.0
1,059	0.0	0.0
1,060	0.0	0.0
1,061	0.0	0.0
1,062	0.0	22.01
1,063	1.23	72.29
1,064	6.63	80.00
1,065	17.29	89.29
1,066	22.17	90.00
1,067	24.00	82.70
1,068	24.00	31.96
1,069	24.00	−10.00
1,070	22.57	−10.00
1,071	22.00	−10.00
1,072	13.88	−10.00
1,073	10.00	−10.00
1,074	9.31	−10.00
1,075	3.99	−10.00
1,076	0.0	0.0
1,077	0.0	0.0
1,078	0.0	0.0
1,079	0.0	0.0
1,080	0.0	0.0
1,081	0.0	0.0
1,082	0.0	0.0
1,083	0.0	0.0
1,084	0.0	0.0
1,085	0.0	0.0
1,086	0.0	0.0
1,087	0.0	0.0
1,088	0.0	0.0
1,089	0.0	0.0
1,090	0.0	0.0
1,091	0.0	0.0
1,092	0.0	0.0
1,093	0.0	0.0
1,094	0.0	0.0
1,095	0.0	0.0
1,096	0.0	0.0
1,097	0.0	0.0
1,098	0.0	0.0
1,099	−2.52	6.30
1,100	−4.22	15.28
1,101	0.0	10.00
1,102	0.0	10.00
1,103	0.0	10.00
1,104	0.0	75.93
1,105	0.0	32.22
1,106	1.67	35.00
1,107	15.48	29.82
1,108	25.46	−10.00
1,109	24.22	−10.00
1,110	23.44	−10.00
1,111	12.41	80.00
1,112	8.94	83.61
1,113	7.26	84.82
1,114	16.70	80.00
1,115	24.67	63.33
1,116	0.24	79.81
1,117	0.0	8.52
1,118	0.0	0.0
1,119	0.0	0.0
1,120	0.0	0.0
1,121	0.0	0.0
1,122	0.0	0.0
1,123	0.0	0.0
1,124	0.0	0.0
1,125	0.0	0.0
1,126	0.0	0.0
1,127	0.0	0.0
1,128	0.0	17.59
1,129	0.0	19.63
1,130	0.0	10.00
1,131	0.0	10.00
1,132	0.0	10.00
1,133	0.0	3.34
1,134	0.0	0.0
1,135	0.0	0.0
1,136	0.0	0.0
1,137	0.0	0.0
1,138	0.0	0.0
1,139	0.0	0.0
1,140	0.0	0.0
1,141	0.0	0.0
1,142	0.0	0.0
1,143	0.0	0.0
1,144	0.0	0.0
1,145	0.0	0.0
1,146	0.0	0.0
1,147	0.0	0.0
1,148	0.0	0.0
1,149	0.0	0.0
1,150	0.0	0.0
1,151	0.0	0.0
1,152	0.0	0.0
1,153	0.0	0.0
1,154	0.0	0.0
1,155	0.0	0.0
1,156	0.0	0.0
1,157	0.0	0.0
1,158	0.0	0.0
1,159	0.0	0.0
1,160	0.0	0.0
1,161	0.0	0.0
1,162	0.0	0.0
1,163	0.0	0.0
1,164	0.0	0.0
1,165	0.0	0.0
1,166	0.0	0.0
1,167	0.0	0.0

(g) EPA US06 Driving Schedule for Light-Duty Vehicles and Light-Duty Trucks.

EPA US06 DRIVING SCHEDULE

[Speed versus Time Sequence]

Time (sec)	Speed (mph)
0	0.0
1	0.0
2	0.0
3	0.0
4	0.0
5	0.0
6	0.2
7	0.7
8	1.1
9	1.7
10	6.0
11	13.9

EPA US06 DRIVING SCHEDULE—Continued

[Speed versus Time Sequence]

Time (sec)	Speed (mph)
12	20.5
13	25.7
14	25.0
15	28.4
16	32.3
17	34.6
18	36.5
19	38.4
20	39.9
21	42.2
22	43.8
23	44.2
24	43.4
25	42.6
26	40.3
27	39.2
28	38.4
29	38.4
30	39.2
31	38.8
32	38.8
33	36.5
34	32.3
35	27.6
36	22.3
37	17.3
38	11.5
39	5.8
40	1.2
41	0.0
42	0.0
43	0.0
44	0.0
45	0.0
46	0.0
47	0.0
48	0.0
49	0.8
50	9.2
51	14.9
52	18.2
53	22.2
54	27.2
55	31.4
56	33.8
57	37.2
58	40.8
59	44.0
60	46.3
61	47.6
62	49.5
63	51.2
64	53.0
65	54.4
66	55.6
67	56.4
68	56.1
69	56.2
70	55.8
71	55.1
72	54.4
73	54.2
74	54.4
75	54.2
76	53.5
77	52.3
78	52.0
79	51.9
80	51.8
81	51.9

EPA US06 DRIVING SCHEDULE—Continued

[Speed versus Time Sequence]

Time (sec)	Speed (mph)
82	52.0
83	52.5
84	53.4
85	54.9
86	56.8
87	58.8
88	60.6
89	62.3
90	64.2
91	66.2
92	67.8
93	69.4
94	70.4
95	70.6
96	70.7
97	70.3
98	68.2
99	66.5
100	64.9
101	63.7
102	62.5
103	61.0
104	59.3
105	57.7
106	56.0
107	54.5
108	52.8
109	51.2
110	49.5
111	48.0
112	46.3
113	44.0
114	41.1
115	38.8
116	37.7
117	36.6
118	35.3
119	30.0
120	24.4
121	19.8
122	15.5
123	10.8
124	6.3
125	3.2
126	2.1
127	1.2
128	0.0
129	0.0
130	0.0
131	0.0
132	0.0
133	0.0
134	0.0
135	0.0
136	2.7
137	9.2
138	16.1
139	22.7
140	29.2
141	34.2
142	38.8
143	43.0
144	45.3
145	46.8
146	48.0
147	49.5
148	50.3
149	51.5
150	52.2
151	52.6

EPA US06 DRIVING SCHEDULE—Continued

[Speed versus Time Sequence]

Time (sec)	Speed (mph)
152	53.0
153	53.8
154	53.8
155	53.8
156	54.6
157	56.3
158	56.9
159	58.1
160	58.4
161	59.6
162	59.9
163	60.2
164	60.5
165	59.7
166	58.3
167	58.1
168	57.8
169	57.3
170	57.5
171	56.6
172	57.0
173	56.6
174	56.5
175	56.2
176	56.4
177	56.6
178	56.4
179	56.1
180	56.0
181	55.9
182	54.8
183	54.2
184	54.6
185	52.2
186	54.7
187	55.7
188	57.0
189	58.0
190	58.1
191	59.4
192	59.9
193	61.0
194	61.4
195	61.9
196	62.5
197	62.5
198	62.7
199	62.2
200	62.5
201	63.1
202	62.7
203	62.8
204	63.0
205	64.1
206	63.9
207	64.1
208	64.3
209	64.5
210	64.9
211	65.3
212	66.0
213	66.0
214	66.4
215	64.1
216	63.6
217	63.9
218	64.1
219	63.7
220	64.3
221	64.2

EPA US06 DRIVING SCHEDULE—Continued

[Speed versus Time Sequence]

Time (sec)	Speed (mph)
222	63.9
223	64.2
224	63.4
225	64.0
226	63.9
227	64.0
228	63.8
229	64.0
230	63.3
231	63.4
232	63.9
233	64.0
234	64.3
235	64.8
236	65.1
237	64.0
238	64.2
239	63.1
240	63.7
241	63.1
242	63.7
243	63.5
244	63.0
245	63.1
246	63.0
247	63.3
248	63.4
249	63.3
250	62.5
251	62.5
252	62.9
253	62.8
254	62.2
255	62.4
256	62.3
257	62.3
258	62.4
259	62.1
260	62.5
261	62.8
262	62.3
263	62.3
264	62.4
265	61.9
266	62.8
267	62.8
268	62.3
269	62.8
270	62.4
271	62.1
272	61.9
273	61.8
274	62.1
275	62.1
276	62.1
277	62.0
278	62.4
279	62.2
280	62.2
281	62.4
282	62.7
283	62.6
284	63.7
285	64.3
286	64.8
287	65.1
288	65.9
289	66.1
290	67.0
291	67.2

EPA US06 DRIVING SCHEDULE—Continued

[Speed versus Time Sequence]

Time (sec)	Speed (mph)
292	67.5
293	68.3
294	68.3
295	68.8
296	69.1
297	69.4
298	71.7
299	72.1
300	74.9
301	72.6
302	72.2
303	72.2
304	72.0
305	72.5
306	72.8
307	72.7
308	71.8
309	71.4
310	71.1
311	71.1
312	70.9
313	71.0
314	71.0
315	71.2
316	72.1
317	72.6
318	73.6
319	74.8
320	75.7
321	77.3
322	78.4
323	79.3
324	78.2
325	76.0
326	75.6
327	76.4
328	77.6
329	78.0
330	79.1
331	79.5
332	79.9
333	79.9
334	80.3
335	80.3
336	79.5
337	79.5
338	79.1
339	78.7
340	77.6
341	76.5
342	74.3
343	72.6
344	70.8
345	67.6
346	66.4
347	66.7
348	66.1
349	65.9
350	66.2
351	66.1
352	67.1
353	67.4
354	68.3
355	68.3
356	68.7
357	68.2
358	68.1
359	68.0
360	67.1
361	66.4

EPA US06 DRIVING SCHEDULE—Continued

[Speed versus Time Sequence]

Time (sec)	Speed (mph)
362	66.1
363	65.7
364	66.0
365	66.4
366	66.0
367	66.3
368	67.0
369	67.5
370	67.9
371	68.1
372	68.5
373	68.9
374	68.6
375	69.4
376	69.4
377	69.4
378	70.0
379	70.4
380	70.6
381	70.9
382	70.3
383	70.6
384	70.3
385	69.7
386	69.9
387	70.1
388	69.6
389	69.3
390	69.9
391	69.7
392	69.5
393	69.9
394	70.2
395	70.2
396	70.2
397	71.0
398	70.8
399	70.9
400	70.7
401	70.9
402	71.2
403	71.3
404	70.8
405	71.2
406	71.7
407	71.9
408	72.6
409	72.3
410	72.3
411	72.1
412	72.0
413	71.9
414	72.6
415	72.8
416	73.2
417	72.1
418	71.5
419	70.9
420	70.4
421	70.5
422	70.9
423	70.2
424	71.0
425	70.2
426	70.3
427	69.1
428	68.8
429	68.2
430	68.3
431	68.2

EPA US06 DRIVING SCHEDULE—Continued

[Speed versus Time Sequence]

Time (sec)	Speed (mph)
432	67.7
433	67.3
434	67.5
435	67.6
436	67.6
437	67.2
438	67.0
439	66.3
440	66.6
441	66.2
442	66.4
443	65.9
444	66.1
445	65.5
446	62.2
447	62.2
448	61.4
449	61.1
450	61.4
451	61.1
452	61.4
453	61.4
454	61.8
455	61.8
456	61.8
457	61.8
458	62.2
459	61.8
460	62.2
461	62.6
462	62.2
463	62.6
464	62.2
465	62.6
466	62.6
467	63.0
468	62.6
469	62.2
470	61.1
471	59.5
472	58.8
473	56.8
474	55.7
475	54.1
476	51.5
477	49.2
478	48.8
479	47.6
480	44.9
481	41.5
482	37.2
483	34.6
484	33.0
485	29.2
486	22.3
487	17.7
488	17.3
489	14.0
490	10.0
491	6.0
492	2.0
493	0.0
494	0.0
495	0.0
496	0.0
497	0.0
498	0.0
499	0.0
500	0.0
501	0.2

EPA US06 DRIVING SCHEDULE—Continued

[Speed versus Time Sequence]

Time (sec)	Speed (mph)
502	4.4
503	10.1
504	15.6
505	20.8
506	25.1
507	27.7
508	28.2
509	26.8
510	24.8
511	22.4
512	17.1
513	11.3
514	6.9
515	7.5
516	11.1
517	15.4
518	19.9
519	24.2
520	27.1
521	28.5
522	28.2
523	25.6
524	21.7
525	17.3
526	12.1
527	7.5
528	5.8
529	2.4
530	1.2
531	1.9
532	6.7
533	11.8
534	16.8
535	21.7
536	25.9
537	27.7
538	28.0
539	27.1
540	24.4
541	20.2
542	15.2
543	9.3
544	5.0
545	2.9
546	2.4
547	8.4
548	13.5
549	17.8
550	22.2
551	26.2
552	30.0
553	29.8
554	26.0
555	21.3
556	16.2
557	11.4
558	6.6
559	2.6
560	0.0
561	0.0
562	0.0
563	0.0
564	0.0
565	0.0
566	0.0
567	0.0
568	0.3
569	6.4
570	12.7
571	19.2

EPA US06 DRIVING SCHEDULE—Continued

[Speed versus Time Sequence]

Time (sec)	Speed (mph)
572	23.8
573	28.2
574	34.9
575	37.5
576	40.3
577	45.0
578	49.9
579	51.6
580	51.2
581	50.6
582	49.9
583	47.8
584	44.6
585	41.2
586	37.8
587	33.4
588	28.0
589	23.7
590	18.8
591	12.9
592	6.2
593	2.2
594	0.0
595	0.0
596	0.0
597	0.0
598	0.0
599	0.0
600	0.0

(h) EPA SC03 Driving Schedule for Light-Duty Vehicles and Light-Duty Trucks.

EPA SC03 DRIVING SCHEDULE

[Speed versus Time Sequence]

Time (sec)	Speed (mph)
0	0.0
1	0.0
2	0.0
3	0.0
4	0.0
5	0.0
6	0.0
7	0.0
8	0.0
9	0.0
10	0.0
11	0.0
12	0.0
13	0.0
14	0.0
15	0.0
16	0.0
17	0.0
18	0.0
19	0.9
20	3.0
21	2.9
22	3.3
23	3.5
24	2.2
25	1.4
26	0.0
27	0.0
28	0.0
29	0.0

EPA SC03 DRIVING SCHEDULE—Continued

[Speed versus Time Sequence]

Time (sec)	Speed (mph)
30	0.0
31	0.0
32	0.0
33	0.4
34	3.3
35	6.0
36	8.0
37	8.7
38	10.0
39	12.4
40	13.8
41	14.7
42	14.8
43	16.6
44	18.3
45	19.0
46	19.2
47	19.3
48	19.7
49	20.5
50	21.0
51	21.2
52	21.6
53	22.2
54	23.8
55	24.6
56	24.3
57	23.3
58	22.7
59	21.4
60	20.4
61	19.5
62	17.9
63	15.6
64	11.7
65	7.8
66	7.2
67	9.3
68	12.9
69	15.8
70	16.2
71	16.9
72	18.3
73	20.3
74	21.6
75	22.4
76	23.0
77	22.8
78	22.1
79	21.2
80	19.5
81	17.1
82	14.1
83	10.5
84	7.6
85	7.5
86	10.0
87	13.1
88	14.1
89	16.4
90	19.6
91	22.4
92	24.7
93	26.1
94	25.8
95	26.6
96	27.8
97	28.5
98	28.9
99	29.3

EPA SC03 DRIVING SCHEDULE—Continued

[Speed versus Time Sequence]

Time (sec)	Speed (mph)
100	29.5
101	29.4
102	29.4
103	29.8
104	30.3
105	30.6
106	30.5
107	30.5
108	30.1
109	29.3
110	28.4
111	27.6
112	26.8
113	25.5
114	23.7
115	21.7
116	19.3
117	16.7
118	14.4
119	11.5
120	7.9
121	6.6
122	9.4
123	12.4
124	14.8
125	16.1
126	19.3
127	22.6
128	25.5
129	26.4
130	26.7
131	27.8
132	29.4
133	31.1
134	32.5
135	33.6
136	34.6
137	35.4
138	36.1
139	37.0
140	37.7
141	38.1
142	38.3
143	38.1
144	37.8
145	36.6
146	34.8
147	33.2
148	32.4
149	32.3
150	32.3
151	32.4
152	32.4
153	32.4
154	32.5
155	33.3
156	34.4
157	35.5
158	36.6
159	37.4
160	38.0
161	38.4
162	38.5
163	38.6
164	38.4
165	38.2
166	37.5
167	36.9
168	36.3
169	34.8

EPA SC03 DRIVING SCHEDULE—Continued

[Speed versus Time Sequence]

Time (sec)	Speed (mph)
170	33.0
171	31.4
172	30.7
173	30.3
174	30.0
175	29.3
176	27.4
177	25.1
178	21.8
179	17.2
180	12.5
181	8.1
182	4.5
183	2.0
184	1.0
185	0.6
186	0.0
187	0.0
188	0.0
189	0.0
190	0.0
191	0.0
192	0.0
193	0.0
194	0.0
195	0.0
196	0.0
197	0.0
198	0.0
199	0.0
200	0.0
201	0.0
202	0.0
203	0.0
204	0.0
205	1.0
206	0.5
207	2.6
208	7.7
209	12.3
210	15.8
211	17.3
212	19.4
213	23.3
214	27.2
215	31.0
216	33.6
217	34.2
218	35.8
219	37.3
220	38.3
221	39.2
222	40.1
223	40.9
224	41.0
225	40.4
226	39.7
227	39.1
228	38.1
229	36.7
230	35.9
231	35.9
232	35.7
233	34.9
234	33.9
235	32.6
236	31.9
237	31.1
238	30.6
239	30.3

EPA SC03 DRIVING SCHEDULE—Continued

[Speed versus Time Sequence]

Time (sec)	Speed (mph)
240	30.1
241	29.9
242	29.8
243	29.8
244	29.8
245	29.8
246	29.7
247	29.7
248	29.6
249	28.4
250	25.8
251	22.8
252	19.0
253	14.0
254	8.6
255	4.1
256	1.3
257	0.0
258	0.0
259	0.0
260	0.0
261	0.0
262	0.0
263	0.0
264	0.0
265	0.0
266	0.0
267	0.0
268	0.0
269	0.0
270	0.0
271	0.0
272	0.0
273	0.0
274	0.0
275	0.0
276	0.0
277	0.0
278	0.0
279	0.0
280	0.0
281	0.1
282	4.5
283	9.1
284	13.6
285	18.2
286	22.6
287	26.2
288	29.3
289	32.1
290	34.5
291	36.8
292	38.4
293	40.0
294	41.2
295	41.9
296	42.2
297	42.7
298	43.0
299	43.3
300	43.5
301	43.7
302	44.3
303	45.4
304	45.9
305	46.8
306	47.6
307	48.2
308	48.6
309	48.7

EPA SC03 DRIVING SCHEDULE—Continued

[Speed versus Time Sequence]

Time (sec)	Speed (mph)
310	48.6
311	49.0
312	49.8
313	50.5
314	51.2
315	52.1
316	52.7
317	53.4
318	52.4
319	54.5
320	54.8
321	54.8
322	54.7
323	54.3
324	54.0
325	53.8
326	53.5
327	53.3
328	52.9
329	52.6
330	52.0
331	51.6
332	51.0
333	50.3
334	49.3
335	48.1
336	46.5
337	43.6
338	40.7
339	37.2
340	34.4
341	31.4
342	28.6
343	24.2
344	18.1
345	12.3
346	8.1
347	4.8
348	2.6
349	2.1
350	0.0
351	0.0
352	0.0
353	0.0
354	0.0
355	0.0
356	0.0
357	0.0
358	0.0
359	0.0
360	0.0
361	0.0
362	0.0
363	0.0
364	0.0
365	0.0
366	0.0
367	0.0
368	0.0
369	0.0
370	0.0
371	4.3
372	9.1
373	13.2
374	16.3
375	19.1
376	20.9
377	22.7
378	24.8
379	26.9

EPA SC03 DRIVING SCHEDULE—Continued

[Speed versus Time Sequence]

Time (sec)	Speed (mph)
380	28.8
381	30.0
382	30.4
383	30.6
384	30.9
385	31.1
386	30.8
387	31.1
388	31.5
389	32.4
390	33.1
391	33.3
392	33.4
393	33.7
394	34.1
395	34.7
396	35.0
397	35.4
398	35.8
399	36.0
400	36.2
401	36.3
402	36.4
403	36.5
404	36.9
405	37.2
406	37.3
407	37.8
408	38.2
409	38.6
410	38.8
411	38.6
412	38.9
413	39.0
414	38.8
415	38.6
416	38.1
417	37.6
418	37.6
419	37.3
420	37.0
421	36.6
422	36.2
423	36.0
424	36.0
425	35.5
426	34.5
427	33.0
428	31.0
429	27.5
430	22.6
431	20.0
432	19.0
433	19.4
434	19.2
435	20.6
436	22.9
437	24.6
438	25.5
439	26.9
440	27.3
441	28.2
442	29.6
443	30.2
444	30.7
445	31.3
446	31.7
447	32.2
448	32.5
449	33.0

EPA SC03 DRIVING SCHEDULE—Continued

[Speed versus Time Sequence]

Time (sec)	Speed (mph)
450	33.2
451	33.3
452	33.1
453	32.7
454	32.3
455	31.9
456	31.5
457	31.2
458	30.8
459	30.5
460	30.2
461	29.9
462	30.2
463	30.6
464	30.9
465	31.2
466	31.8
467	32.4
468	32.5
469	32.3
470	32.3
471	32.8
472	32.9
473	32.8
474	32.8
475	33.3
476	33.4
477	32.9
478	32.9
479	32.8
480	32.9
481	32.8
482	32.8
483	32.4
484	31.6
485	30.6
486	30.3
487	30.3
488	29.8
489	29.3
490	28.9
491	28.8
492	29.3
493	30.0
494	30.2
495	30.4
496	30.7
497	30.8
498	29.8
499	28.7
500	28.9
501	29.2
502	29.4
503	28.6
504	27.0
505	27.2
506	26.6
507	23.2
508	21.2
509	21.2
510	20.8
511	17.9
512	13.2
513	9.5
514	6.4
515	4.1
516	2.5
517	0.0
518	0.0
519	0.0

EPA SC03 DRIVING SCHEDULE—Continued

[Speed versus Time Sequence]

Time (sec)	Speed (mph)
520	0.0
521	0.0
522	0.0
523	0.0
524	0.0
525	0.0
526	0.0
527	0.0
528	0.0
529	0.0
530	0.0
531	0.0
532	0.0
533	0.0
534	0.0
535	0.0
536	0.0
537	0.6
538	3.3
539	5.9
540	8.9
541	10.2
542	10.4
543	9.9
544	9.9
545	10.5
546	11.3
547	12.4
548	12.8
549	14.0
550	14.6
551	15.5
552	17.0
553	17.5
554	18.1
555	18.4
556	18.5
557	18.2
558	18.5
559	18.3
560	18.2
561	17.9
562	17.7
563	17.7
564	17.3
565	17.4
566	16.8
567	17.5
568	17.7
569	17.5

EPA SC03 DRIVING SCHEDULE—Continued

[Speed versus Time Sequence]

Time (sec)	Speed (mph)
570	17.6
571	17.3
572	17.4
573	17.6
574	17.6
575	17.9
576	18.0
577	17.8
578	17.7
579	17.5
580	17.7
581	17.7
582	18.1
583	18.4
584	19.2
585	18.9
586	18.0
587	15.6
588	13.3
589	10.0
590	7.7
591	5.8
592	3.7
593	2.4
594	0.0
595	0.0
596	0.0
597	0.0
598	0.0
599	0.0
600	0.0

[42 FR 32989, June 28, 1977, as amended at 43 FR 52924, Nov. 14, 1978; 45 FR 4214, Jan. 21, 1980; 48 FR 1465, Jan. 12, 1983; 48 FR 52239, Nov. 16, 1983; 49 FR 48148, Dec. 10, 1984; 52 FR 47876, Dec. 16, 1987; 54 FR 14612, Apr. 11, 1989; 58 FR 16067, Mar. 24, 1993; 61 FR 54901, Oct. 22, 1996; 63 FR 23501, Apr. 29, 1998; 70 FR 40443, July 13, 2005]

APPENDIX II TO PART 86—TEMPERATURE SCHEDULES

(a) Ambient temperature cycle for the diurnal emission portion of the evaporative emission test (see § 86.133).

TABLE I—TEMPERATURE VERSUS TIME SEQUENCE

Use linear interpolation between hourly temperatures

Time (min)	Temp. (°F)	Time (min)	Temp. (°F)	Time (min)	Temp. (°F)
0	72.0	60	72.5	120	75.5
180	80.3	240	85.2	300	89.4
360	93.1	420	95.1	480	95.8
540	96.0	600	95.5	660	94.1
720	91.7	780	88.6	840	85.5
900	82.8	960	80.9	1020	79.0
1080	77.2	1140	75.8	1200	74.7
1260	73.9	1320	73.3	1380	72.6
1440	72.0	1500	72.5	1560	75.5
1620	80.3	1680	85.2	1740	89.4
1800	93.1	1860	95.1	1920	95.8
1980	96.0	2040	95.5	2100	94.1
2160	91.7	2220	88.6	2280	85.5

TABLE I—TEMPERATURE VERSUS TIME SEQUENCE—Continued

Use linear interpolation between hourly temperatures					
Time (min)	Temp. (°F)	Time (min)	Temp. (°F)	Time (min)	Temp. (°F)
2340	82.8	2400	80.9	2460	79.0
2520	77.2	2580	75.8	2640	74.7
2700	73.9	2760	73.3	2820	72.6
2880	72.0	2940	72.5	3000	75.5
3060	80.3	3120	85.2	3180	89.4
3240	93.1	3300	95.1	3360	95.8
3420	96.0	3480	95.5	3540	94.1
3600	91.7	3660	88.6	3720	85.5
3780	82.8	3840	80.9	3900	79.0
3960	77.2	4020	75.8	4080	74.7
4140	73.9	4200	73.3	4260	72.6
4320	72.9				

[58 FR 16070, Mar. 24, 1993]

APPENDIX III TO PART 86—CONSTANT VOLUME SAMPLER FLOW CALIBRATION

The following calibration procedure outlines the equipment, the test setup configuration, and the various parameters which must be measured to establish the flow rate of the constant volume sampler pump. All the parameters related to the pump are simultaneously measured with the parameters related to a flowmeter which is connected in series with the pump. The calculated flow rate (ft^3/rev@ pump inlet absolute pressure and temperature) can then be plotted versus a correlation function which is the value of a specific combination of pump parameters. The linear equation which relates the pump flow and the correlation function is then determined. In the event that a CVS has a multiple speed drive, a calibration for each range should be performed.

This calibration procedure is based on the measurement of the absolute values of the pump and flowmeter parameters that relate the flow rate at each point. Three conditions must be maintained to assure the accuracy and integrity of the calibration curve. First, the pump pressures should be measured at taps on the pump rather than at the external piping on the pump inlet and outlet. Pressure taps that are mounted at the top and bottom center of the pump drive headplate are exposed to the actual pump cavity pressures, and therefore reflect the absolute pressure differentials. Secondly, temperature stability must be maintained during the calibration. The laminar flowmeter is sensitive to inlet temperature oscillations which cause the data points to be scattered. Gradual changes (±2 °F) in temperature are acceptable as long as they occur over a period of several minutes. Finally, all connections between the flowmeter and the CVS pump must be absolutely void of any leakage.

During a CVS emissions test the measurement of these same pump parameters enables the user to calculate the flow rate from the calibration equation.

After the calibration curve has been obtained, a verification test of the entire system can be performed by injecting a known mass of gas into the system and comparing the mass indicated by the system to the true mass injected. An indicated error does not necessarily mean that the calibration is wrong, since other factors can influence the accuracy of the system.

Equipment:

The following list of equipment will be needed to perform this calibration procedure. Figure 1 illustrates a typical equipment arrangement used for calibration. All of the equipment involved should conform to the range and accuracy as specified in Figure 1.

Equipment List:

1. LFE—Laminar Flowmeter
2. Micromanometer
3. Thermometer
4. Timer
5. U-Tube Manometers
6. Temperature Indicator with type J Thermocouples
7. A variable flow restrictor with appropriate piping to connect the CVS pump and LFE.

After the system has been connected as shown in Figure 1, set the variable restrictor in the wide open position and run the CVS pump for twenty minutes. Record the calibration data.

CALIBRATION DATA MEASUREMENTS

Parameter	Symbol	Units	Tolerance
Barometric pressure (corrected)	P_B	"Hg	±.01 "Hg.

CALIBRATION DATA MEASUREMENTS—Continued

Parameter	Symbol	Units	Tolerance
Ambient temperature	T_A	°F	±.5 °F.
Air Temperature into LFE	ETI	°F	±.1 °F.
Pressure depression upstream of LFE	EPI	''H20	±.1''H20.
Pressure drop across the LFE matrix	EDP	''H20	±.005''H20.
Air temperature at CVS pump inlet	PTI	°F	±.5 °F.
Pressure depression at CVS pump inlet	PPI	''Fluid	±.05''Fluid.
Specific gravity of manometer fluid	Sp. Gr.		
Pressure head at CVS pump outlet	PPO	''Fluid	±.05''Fluid.
Air temperature at CVS pump outlet (optional)	PTO	°F	±.5 °F.
Pump revolutions during test period	N	Revs	None.
Elapsed time for test period	t	Seconds	±.05 Seconds.

NOTE: The fluid level in the manometer tube should stabilize before the reading is made and the elapsed time for revolution counting should be greater than 120 seconds.

Reset the restrictor valve to a more restricted condition in an increment of pump inlet depression (about 4″ H_2O) that will yield a minimum of six data points for the total calibration.

Allow the system to stabilize for 3 minutes and repeat the data acquisition.

Data Analysis:

The data recorded during the calibration are to be used in the following calculations.

1. The air flow rate at each test point is calculated in standard cubic feet per minute (Qs) from the flowmeter data using the manufacturer's prescribed method.

2. The air flow rate is then converted to pump flow, Vo, in cubic feet per revolution at absolute pump inlet temperature and pressure.

$V_o = Qs/n \times T_p/530 \times 29.92/P_p$

where:

Qs=Meter air flow rate in standard cubic feet per minute (flowmeter standard conditions are 70 °F, 29.92 ''Hg).

n=Pump speed in revolutions per minute.

P_p=Absolute pump inlet pressure, in (''Hg).

$P_p=P_B-PPI$ (SP.GR./13.57), T_p = PTI + 460.

3. The correlation function at each test point is then calculated from the calibration data, as follows:

$$X_o = \frac{1}{n}\sqrt{\frac{\Delta P_v}{P_e}}$$

ΔP_p = The pressure differential from pump inlet to pump outlet in (''Hg).

$\Delta P_p = P_e - P_p$

P_e=Absolute pump outlet pressure, in (''Hg).

$P_p = P_B + PPO$ (Sp. Gr./13.57)

See §86.177–22 for other definitions.

4. A linear least squares fit is performed to generate the calibration equations which have the forms

$V_o = D_o - M(X_o)$

$n = A - B(P_p)$

Do, M, A, and B are the slope-intercept constants describing the lines.

A CVS system that has multiple speeds should be calibrated on each speed used. The calibration curves generated for the ranges will be approximately parallel and the intercept values, D_o, will increase as the pump flow range decreases.

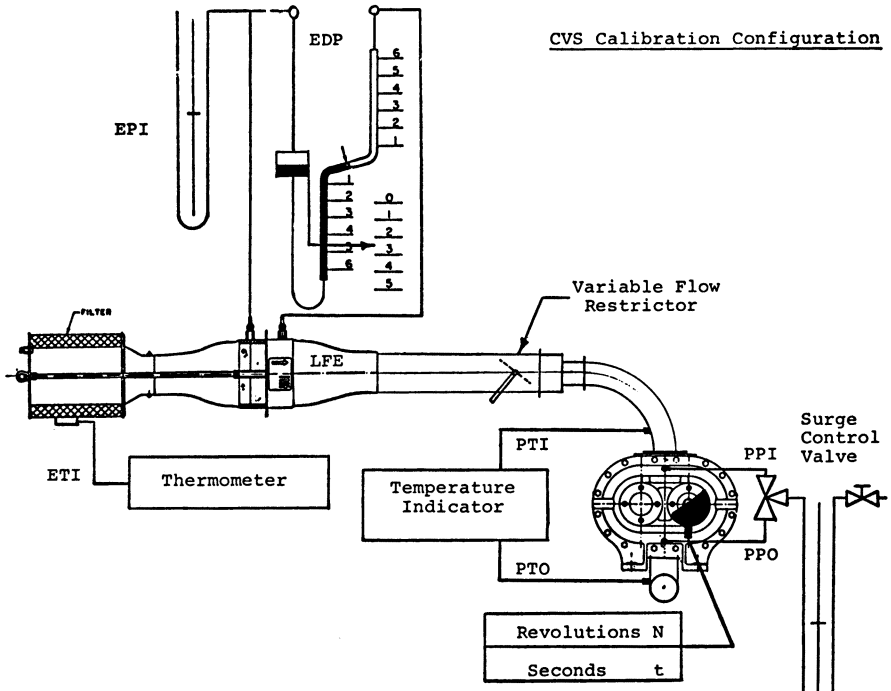

Unit		Range	Accuracy
	ETI	0-100 °F	± .1 °F
LFE	EPI	0-10 "H_2O	± .1 "H_2O
	EDP	0-10 "H_2O	± .005 "H_2O
	PTI	0-250 °F	± .5 °F
	PPI	0-36 "Fluid	± .05 "Fluid
	PPO	0-36 "Fluid	± .05 "Fluid
Pump	PTO	0-250 °F	± .5 °F
	N	0-100,000	± 0
	t	0-10,000 secs.	± .05 secs.

Note: Fluid used in 36 inch manometer should extend range to at least 0-60 "H_2O. Separate manometers for PPI and PPO may be used during calibration.

Figure I—CVS Calibration Configuration

If the calibration has been performed carefully, the calculated V_o values from the equation will be within ±.50% of the measured value of V_o. Values of M will vary from one pump to another, but values of D_o for pumps of the same make, model, and range should agree within ±3 percent of each other. Particulate influx from use will cause the pump slip to decrease as reflected by lower values for M. Calibrations should be performed at 0, 30, 100, 200, 400, etc. hours of pump operation to assure the stability of the pump slip rate. Analysis of mass injection data will also reflect pump slip stability.

CVS System Verification:

The following technique can be used to verify that the CVS and analytical instruments can accurately measure a mass of gas that has been injected into the system.

1. Obtain a small cylinder that has been charged with pure propane or carbon monoxide gas (caution—carbon monoxide is poisonous!). Critical flow orifice devices can also be used for constant flow metering.

2. Determine a reference cylinder weight to the nearest 0.01 gram.

3. Operate the CVS in the normal manner and release a quantity of pure propane or

carbon monoxide into the system during the sampling period.

4. The calculations of §86.177–22 are performed in a normal way except, in the case of propane, the density of propane (17.30 grams/cu./ft./carbon atom) is used in place of the density of exhaust hydrocarbons. In the case of carbon monoxide, the density of 32.97 grams/cu. ft. is used.

5. The gravimetric mass is subtracted from the CVS measured mass and then divided by the gravimetric mass to determine the percent accuracy of the system.

6. The cause for any discrepancy greater than ±2 percent should be found and corrected. The following list of parametric errors may assist the operator in locating the cause of large errors.

Positive Error (Indication is higher than true value):

1. Calculated V_o is greater than actual V_o.

a. Original calibration in error.

2. Pump inlet temperature recorder is reading low. A 6 °F. discrepancy will give a 1 percent error.

3. Pump inlet pressure indicator is reading high. A 3.5 in. H_2O high reading will give 1 percent error.

4. Background concentration reading is too low. Check analyzer zero. Check leakage at floor inlet.

5. Analyzer is reading high. Check span.

6. Barometer reading is in error (too high). Barometric pressure reading should be gravity and temperature corrected.

7. Revolution counter is reading high (Check pump speed and counters.)

8. Mixture is stratified causing the sample to be higher than the average concentration in the mixture. Negative Error (Indication is lower than true value):

1. Calculated V_o is less than actual V_o.

a. Original calibration in error.

b. Pump clearances decreased due to influx of some surface adherent material. Recalibration may be needed.

2. Pump inlet temperature recorder is reading high.

3. Pump inlet pressure indicator is reading low.

4. Background concentration reading is too high.

5. Analyzer is reading low.

6. Barometer reading is in error (too low).

7. Revolution counter is reading low.

8. There is a leak into the sampling system. Pressure check the lines and fittings on the intake side of sample transfer pumps on both the CVS and analyzer console.

[42 FR 33000, June 28, 1977]

APPENDIX IV TO PART 86—DURABILITY DRIVING SCHEDULES

(a) Durability Driving Schedule for Light-Duty Vehicles and Light-Duty Trucks.

The schedule consists basically of 11 laps of a 3.7 mile course. The basic vehicle speed for each lap is listed below:

Lap	Speed miles per hour
1	40
2	30
3	40
4	40
5	35
6	30
7	35
8	45
9	35
10	55
11	70

During each of the first nine laps there are 4 stops with 15 second idle. Normal accelerations and decelerations are used. In addition, there are 5 light decelerations each lap from the base speed to 20 m.p.h. followed by light accelerations to the base speed.

The 10th lap is run at a constant speed of 55 m.p.h.

The 11th lap is begun with a wide open throttle acceleration from stop to 70 m.p.h. A normal deceleration to idle followed by a second wide open throttle acceleration occurs at the midpoint of the lap.

(b) Durability Driving Schedule for Motorcycles. The Durability Driving Schedule for Class III Motorcycles may be used for Light-Duty Vehicles and Light-Duty Trucks.

The schedule consists basically of 11 laps of a 6.0 km (3.7 mi) course. The basic vehicle speed for each lap is listed below:

SPEED (KILOMETERS PER HOUR)

Lap	Class I	Class II	Class III
1	65	65	65
2	45	45	65
3	65	65	55
4	65	65	45
5	55	55	55
6	45	45	55
7	55	55	70
8	70	70	55
9	55	55	46
10	70	90	90
11	70	90	110

During each of the first nine laps there are 4 stops with 15 second idle. Normal accelerations and decelerations are used. In addition, there are 5 light declerations each lap from the base speed to 30 km/h followed by light accelerations to the base speed.

The 10th lap is run at a constant speed.

The 11th lap is begun with a wide open throttle acceleration from stop. A normal deceleration to idle followed by a second wide open throttle acceleration occurs at the midpoint of the lap.

This schedule may be modified with the advance approval of the Administrator if it results in unsafe operation of the vehicle.

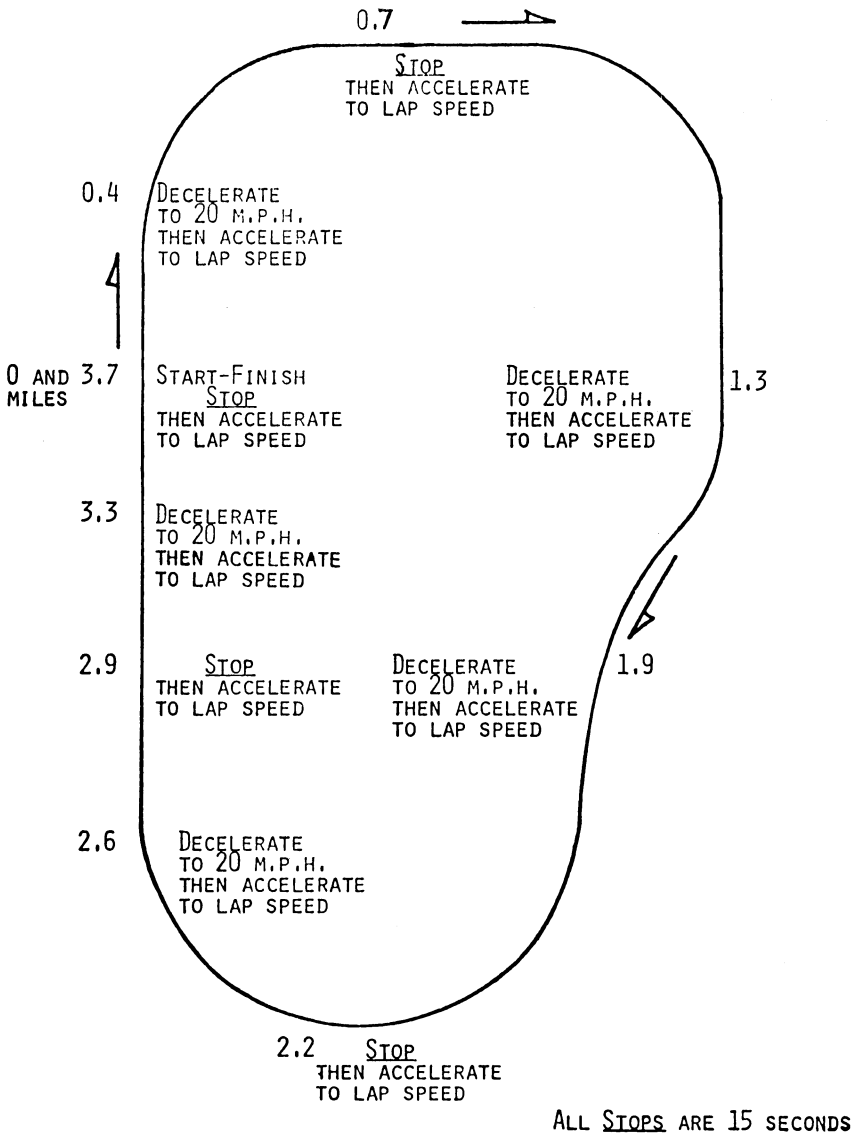

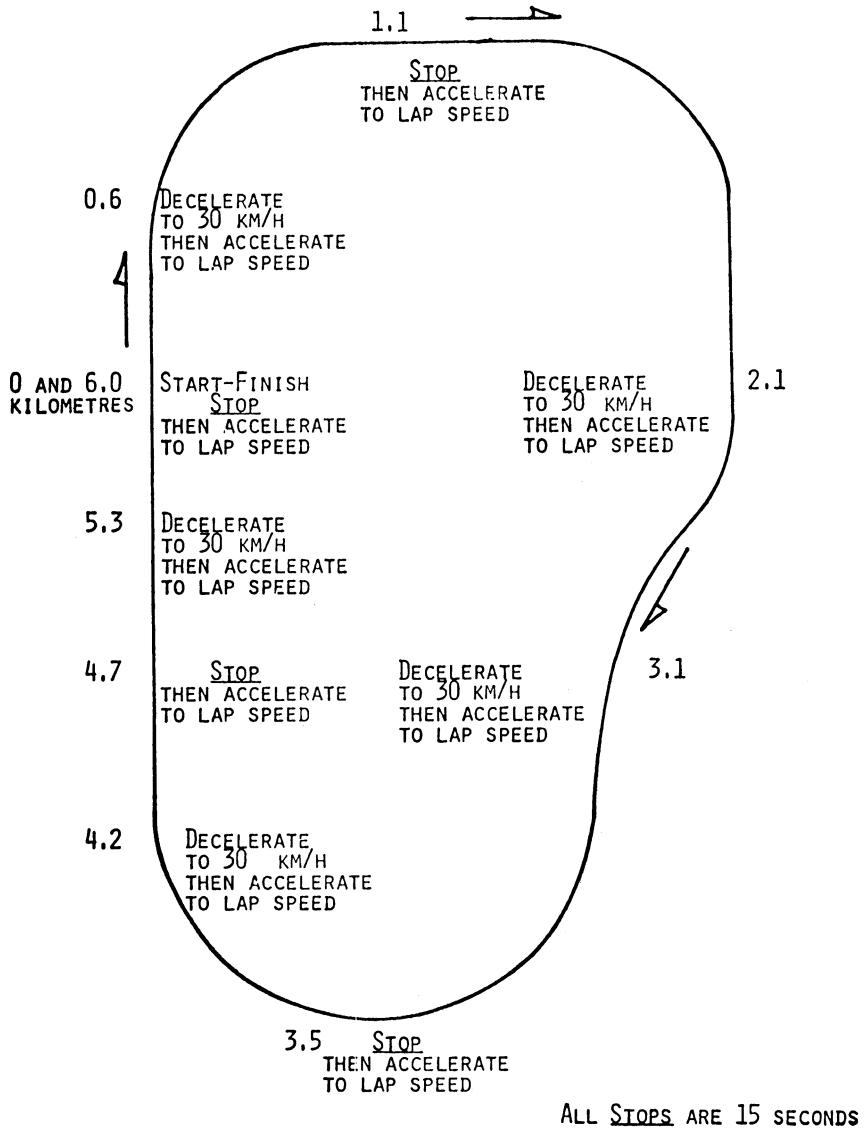

[42 FR 33002, June 28, 1977]

APPENDIX V TO PART 86—THE STANDARD ROAD CYCLE (SRC)

1. The standard road cycle (SRC) is a mileage accumulation cycle that may be used for any vehicle which is covered by the applicability provisions of §86.1801. The vehicle may be run on a track or on a mileage accumulation dynamometer.

2. The cycle consists of 7 laps of a 3.7 mile course. The length of the lap may be changed to accommodate the length of the service-accumulation track.

DESCRIPTION OF THE SRC

Lap	Description	Typical accel rate (MPH/s)
1	(start engine) Idle 10 sec	0
1	Mod accel to 30 MPH	4
1	Cruise at 30 MPH for ¼ lap	0
1	Mod. decel to 20 MPH	−5
1	Mod accel to 30 MPH	4
1	Cruise at 30 MPH for ¼ lap	0
1	Mod. decel to stop	−5
1	Idle 5 sec	0
1	Mod accel to 35 MPH	4
1	Cruise at 35 MPH for ¼ lap	0
1	Mod. decel to 25 MPH	−5
1	Mod accel to 35 MPH	4
1	Cruise at 35 MPH for ¼ lap	0
1	Mod. decel to stop	−5
2	Idle 10 sec	0
2	Mod accel to 40 MPH	3
2	Cruise at 40 MPH for ¼ lap	0
2	Mod. decel to 30 MPH	−5
2	Mod accel to 40 MPH	3
2	Cruise at 40 MPH for ¼ lap	0
2	Mod. decel to stop	−5
2	Idle 5 sec	0
2	Mod accel to 45 MPH	3
2	Cruise at 45 MPH for ¼ lap	0
2	Mod. decel to 35 MPH	−5
2	Mod accel to 45 MPH	3
2	Cruise at 45 MPH for ¼, lap	0
2	Mod. decel to stop	−5
3	Idle 10 sec	0
3	Hard accel to 55 MPH	4
3	Cruise at 55 MPH for ¼ lap	0
3	Mod. decel to 45 MPH	−5
3	Mod accel to 55 MPH	2
3	Cruise at 55 MPH for ¼ lap	0
3	Mod. decel to 45 MPH	−5
3	Mod accel to 60 MPH	2
3	Cruise at 60 MPH for ¼ lap	0
3	Mod. decel to 50 MPH	−5
3	Mod. accel to 60 MPH	2
3	Cruise at 60 MPH for ¼ lap	0
3	Mod. decel to stop	−4
4	Idle 10 sec	0
4	Hard accel to 80 MPH	3
4	Coastdown to 70 MPH	−1
4	Cruise at 70 MPH for ½ Lap	0
4	Mod. decel to 50 MPH	−3
4	Mod accel to 65 MPH	2
4	Cruise at 65 MPH for ½ lap	0
4	Mod. decel to 50 MPH	−3
5	Mod accel to 75 MPH	1
5	Cruise at 75 MPH for ½ lap	0
5	Mod. decel to 50 MPH	−3
5	Lt. accel to 70 MPH	1
5	Cruise at 70 MPH for ½ lap	0
5	Mod. decel 50 MPH	−3
6	Mod accel to 70 MPH	2
6	Coastdown to 60 MPH	−1
6	Cruise at 60 MPH for ½ lap	0
6	Mod. decel to 50 MPH	−4
6	Mod. accel to 65 MPH	1
6	Cruise at 65 MPH for ½ lap	0
6	Mod. decel to stop	−4
7	Idle 45 sec	0
7	Hard accel to 55 MPH	4
7	Cruise at 55 MPH for ¼ lap	0

DESCRIPTION OF THE SRC—Continued

Lap	Description	Typical accel rate (MPH/s)
7	Mod. decel to 40 MPH	−5
7	Mod. accel to 55 MPH	2
7	Cruise at 55 MPH for ¼ lap	0
7	Mod. decel to 40 MPH	−5
7	Mod. accel to 50 MPH	2
7	Cruise at 50 MPH for ¼ lap	0
7	Mod. decel to 40 MPH	−5
7	Mod. accel to 50 MPH	2
7	Cruise at 50 MPH for ¼ lap	0
7	Mod. decel to stop	−5

The standard road cycle is represented graphically in the following figure:

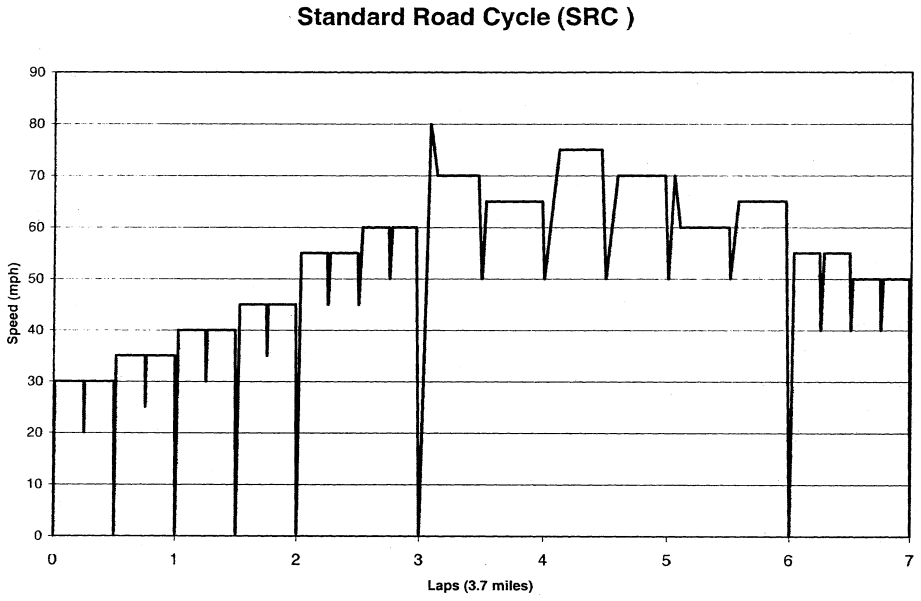

[71 FR 2837, Jan. 17, 2006]

APPENDIX VI TO PART 86—VEHICLE AND ENGINE COMPONENTS

(a) Light-Duty Vehicles, Light-Duty Trucks, Motorcycles, and Gasoline-Fueled Heavy-Duty Engines.

I. Basic Mechanical Components-Engine.

(1) Intake and exhaust valves.

(2) Drive belts.

(3) Manifold and cylinder head bolts.

(4) Engine oil and filter.

(5) Engine coolant.

(6) Cooling system hoses and connections.

(7) Vacuum fittings, hoses, and connections.

(8) Oil injection metering system.

II. Fuel System.

(1) Fuel specification-octane rating, lead content.

(2) Carburetor-idle RPM, mixture ratio.

(3) Choke mechanism.

(4) Fuel system filter and fuel system lines and connections.

(5) Choke plate and linkage.

III. Ignition Components.

(1) Ignition timing and advance systems.

(2) Distributor breaker points and condenser.
(3) Spark plugs.
(4) Ignition wiring.
(5) Operating parts of distributor.
IV. Crankcase Ventilation System.
(1) PCV valve.
(2) Ventilation hoses.
(3) Oil filter breather cap.
(4) Manifold inlet (carburetor spacer, etc.).
V. External Exhaust Emission Control System.
(1) Secondary air injection system hoses.
(2) Air system manifolds.
(3) Control valves and air pump.
(4) Manifold reactors.
(5) Catalytic converters.
(6) Exhaust recirculation.
(7) Water injection.
VI. Evaporative Emission Control System.
(1) Engine compartment hose connections.
(2) Carbon storage media.
(3) Fuel tank pressure-relief valve operation.
(4) Fuel vapor control valves.
VII. Air Inlet Components.
(1) Carburetor air cleaner filter.
(2) Hot air control valve.
(b) Diesel Light-Duty Vehicles, Diesel Light-Duty Trucks, and Diesel Heavy-Duty Engines.
I. Engine Mechanical Components.
(1) Valve train.
(2) Cooling system.
a. Coolant.
b. Thermostat.
c. Filter.
(3) Lubrication.
a. Oil filter.
b. Lubricant.
II. Fuel System.
(1) Fuel type.
(2) Fuel pump.
(3) Fuel filters.
(4) Injectors.
(5) Governor.
III. Air Inlet Components.
(1) Air cleaner.
(2) Inlet ducting.
IV. External Exhaust Emission Control System.
(1) Rack limiting devices (aneroid, throttle delay, etc.).
(2) Manifold reactors.
(3) Catalytic converters.
(4) Exhaust recirculation.
(5) Water injection.

[42 FR 33004, June 28, 1977]

APPENDIX VII TO PART 86—STANDARD BENCH CYCLE (SBC)

1. The standard bench aging durability procedures [Ref. §86.1823–08(d)] consist of aging a catalyst-oxygen-sensor system on an aging bench which follows the standard bench cycle (SBC) described in this appendix.

2. The SBC requires use of an aging bench with an engine as the source of feed gas for the catalyst.

3. The SBC is a 60-second cycle which is repeated as necessary on the aging bench to conduct aging for the required period of time. The SBC is defined based on the catalyst temperature, engine air/fuel (A/F) ratio, and the amount of secondary air injection which is added in front of the first catalyst.

CATALYST TEMPERATURE CONTROL

1. Catalyst temperature shall be measured in the catalyst bed at the location where the highest temperature occurs in the hottest catalyst. Alternatively, the feed gas temperature may be measured and converted to catalyst bed temperature using a linear transform calculated from correlation data collected on the catalyst design and aging bench to be used in the aging process.

2. Control the catalyst temperature at stoichiometric operation (01 to 40 seconds on the cycle) to a minimum of 800 °C (± 10 °C) by selecting the appropriate Engine speed, load, and spark timing for the engine. Control the maximum catalyst temperature that occurs during the cycle to 890 °C (± 10 °C) by selecting the appropriate A/F ratio of the engine during the ''rich'' phase described in the table below.

3. If a low control temperature other than 800 °C is utilized, the high control temperature shall be 90 °C higher than the low control temperature.

STANDARD BENCH CYCLE (SBC)

Time (seconds)	Engine air/fuel ratio	Secondary air injection
01–40	14.7 (stoichiometric, with load, spark timing, and engine speed controlled to achieve a minimum catalyst temperature of 800 °C).	None
41–45	''Rich'' (A/F ratio selected to achieve a maximum catalyst temperature over the entire cycle of 890 °C, or 90° higher than low control temperature).	None
46–55	''Rich'' (A/F ratio selected to achieve a maximum catalyst temperature over the entire cycle of 890 °C, or 90° higher than low control temperature).	3% (± 0.1%)
56–60	14.7 (stoichiometric, same load, spark timing, and engine speed as used in the 01–40 sec period of the cycle).	3% (± 0.1%)

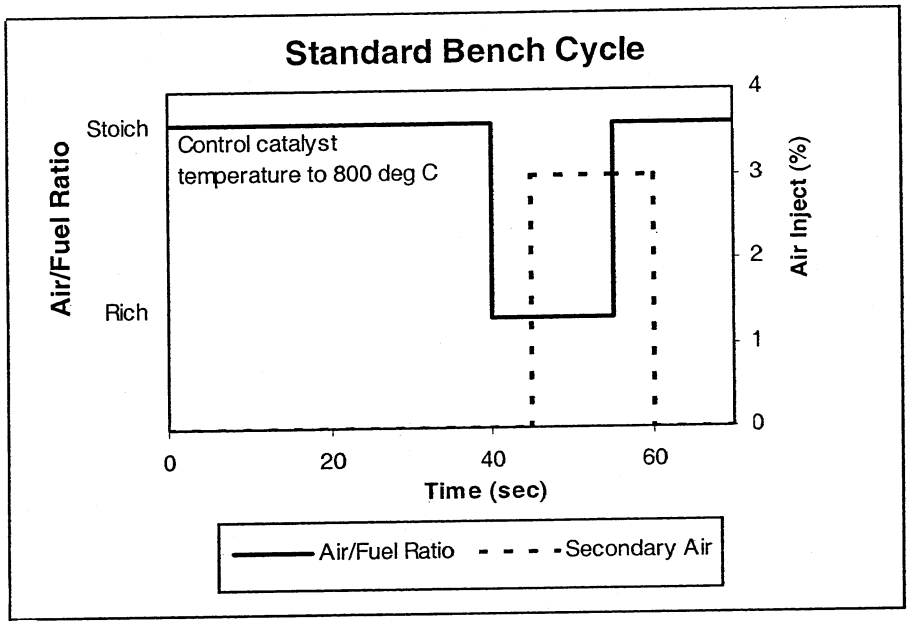

[71 FR 2837, Jan. 17, 2006]

APPENDIX VIII TO PART 86—AGING BENCH EQUIPMENT AND PROCEDURES

This appendix provides specifications for standard aging bench equipment and aging procedures which may be used to conduct bench aging durability under the provisions of §86.1823–08.

1. Aging Bench Configuration

The aging bench must provide the appropriate exhaust flow rate, temperature, air-fuel ratio, exhaust constituents and secondary air injection at the inlet face of the catalyst.

a. The EPA standard aging bench consists of an engine, engine controller, and engine dynamometer. Other configurations may be acceptable (*e.g.* whole vehicle on a dynamometer, or a burner that provides the correct exhaust conditions), as long as the catalyst inlet conditions and control features specified in this appendix are met.

b. A single aging bench may have the exhaust flow split into several streams providing that each exhaust stream meets the requirements of this appendix. If the bench has more than one exhaust stream, multiple catalyst systems may be aged simultaneously.

2. Fuel and Oil

The fuel used by the engine shall comply with the mileage accumulation fuel provisions of §86.113 for the applicable fuel type (*e.g.*, gasoline or diesel fuel). The oil used in the engine shall be representative of commercial oils and selected using good engineering judgement.

3. Exhaust System Installation

a. The entire catalyst(s)-plus-oxygen-sensor(s) system, together with all exhaust piping which connects these components, [the ''catalyst system''] will be installed on the bench. For engines with multiple exhaust streams (such as some V6 and V8 engines), each bank of the exhaust system will be installed separately on the bench.

b. For exhaust systems that contain multiple in-line catalysts, the entire catalyst system including all catalysts, all oxygen sensors and the associated exhaust piping will be installed as a unit for aging. Alternatively, each individual catalyst may be separately aged for the appropriate period of time.

4. Temperature Measurement

Catalyst temperature shall be measured using a thermocouple placed in the catalyst

bed at the location where the highest temperature occurs in the hottest catalyst (typically this occurs approximately one-inch behind the front face of the first catalyst at its longitudinal axis). Alternatively, the feed gas temperature just before the catalyst inlet face may be measured and converted to catalyst bed temperature using a linear transform calculated from correlation data collected on the catalyst design and aging bench to be used in the aging process. The catalyst temperature must be stored digitally at the speed of 1 hertz (one measurement per second).

5. Air/Fuel Measurement

Provisions must be made for the measurement of the air/fuel (A/F) ratio (such as a wide-range oxygen sensor) as close as possible to the catalyst inlet and outlet flanges. The information from these sensors must be stored digitally at the speed of 1 hertz (one measurement per second).

6. Exhaust Flow Balance

Provisions must be made to assure that the proper amount of exhaust (measured in grams/second at stoichiometry, with a tolerance of ±5 grams/second) flows through each catalyst system that is being aged on the bench. The proper flow rate is determined based upon the exhaust flow that would occur in the original vehicle's engine at the steady state engine speed and load selected for the bench aging in paragraph (7).

7. Setup

a. The engine speed, load, and spark timing are selected to achieve a catalyst bed temperature of 800 °C (±10 °C) at steady-state stoichiometric operation.

b. The air injection system is set to provide the necessary air flow to produce 3.0% oxygen (±0.1%) in the steady-state stoichiometric exhaust stream just in front of the first catalyst. A typical reading at the upstream A/F measurement point (required in paragraph 5) is lambda 1.16 (which is approximately 3% oxygen).

c. With the air injection on, set the ''Rich'' A/F ratio to produce a catalyst bed temperature of 890 °C (±10 °C). A typical A/F value for this step is lambda 0.94 (approximately 2% CO).

8. Aging Cycle

The standard bench aging procedures use the standard bench cycle (SBC) which is described in Appendix VII to Part 86. The SBC is repeated until the amount of aging calculated from the bench aging time (BAT) equation [ref. §86.1823–08 (d)(3)] is achieved.

9. Quality Assurance

a. The temperatures and A/F ratio information that is required to be measured in paragraphs (4) and (5) shall be reviewed periodically (at least every 50 hours) during aging. Necessary adjustments shall be made to assure that the SBC is being appropriately followed throughout the aging process.

b. After the aging has been completed, the catalyst time-at-temperature collected during the aging process shall be tabulated into a histogram with temperature bins of no larger than 10 °C. The BAT equation and the calculated effective reference temperature for the aging cycle [ref. §86.1823–08(d)] will be used to determine if the appropriate amount of thermal aging of the catalyst has in fact occurred. Bench aging will be extended if the thermal effect of the calculated aging time is not at least 95% of the target thermal aging.

10. Startup and Shutdown

Care should be taken to assure that the maximum catalyst temperature for rapid deterioration (*e.g.*, 1050 °C) does not occur during startup or shutdown. Special low temperature startup and shutdown procedures may be used to alleviate this concern.

[71 FR 2837, Jan. 17, 2006]

APPENDIX IX TO PART 86—EXPERIMENTALLY DETERMINING THE R-FACTOR FOR BENCH AGING DURABILITY PROCEDURES

The R-Factor is the catalyst thermal reactivity coefficient used in the bench aging time (BAT) equation [Ref. §86.1826–08(d)(3)]. Manufacturers may determine the value of R experimentally using the following procedures.

1. Using the applicable bench cycle and aging bench hardware, age several catalysts (minimum of 3 of the same catalyst design) at different control temperatures between the normal operating temperature and the damage limit temperature. Measure emissions (or catalyst inefficiency (1-catalyst efficiency)) for each constituent. Assure that the final testing yields data between one- and two-times the standard.

2. Estimate the value of R and calculate the effective reference temperature (T_r) for the bench aging cycle for each control temperature according to the procedure described in §86.1826–08(d)(4).

3. Plot emissions (or catalyst inefficiency) versus aging time for each catalyst. Calculate the least-squared best-fit line through the data. For the data set to be useful for this purpose the data should have an approximately common intercept between 0 and 4000 miles. See the following graph for an example.

4. Calculate the slope of the best-fit line for each aging temperature.

5. Plot the natural log (ln) of the slope of each best-fit line (determined in step 4)

along the vertical axis, versus the inverse of aging temperature (1/(aging temperature, deg K)) along the horizontal axis, Calculate the least-squared best-fit lines through the data. The slope of the line is the R-factor. See the following graph for an example.

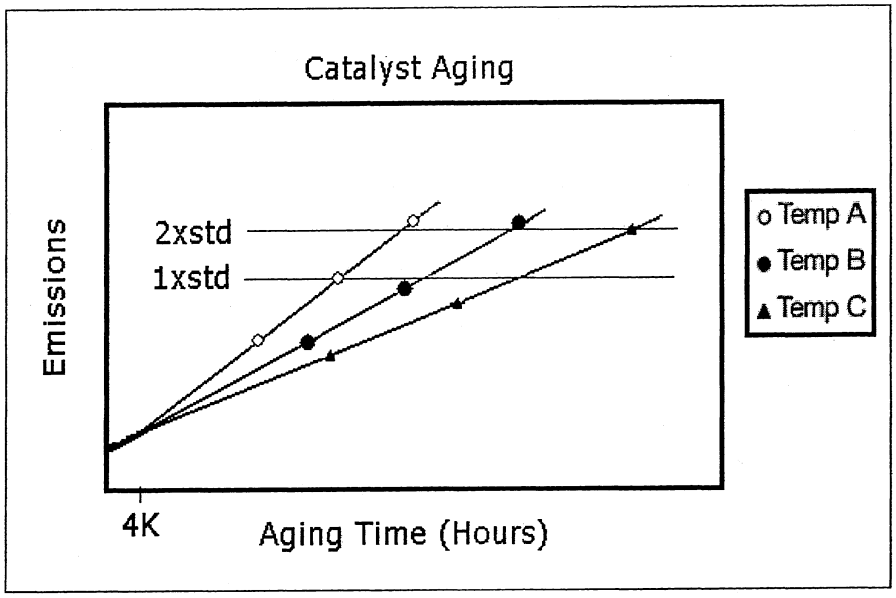

6. Compare the R-factor to the initial value that was used in Step 2. If the calculated R-factor differs from the initial value by more than 5%, choose a new R-factor that is between the initial and calculated values, then repeat Steps 2–6 to derive a new R-factor. Repeat this process until the calculated R-factor is within 5% of the initially assumed R-factor.

7. Compare the R-factor determined separately for each constituent. Use the lowest R-factor (worst case) for the BAT equation.

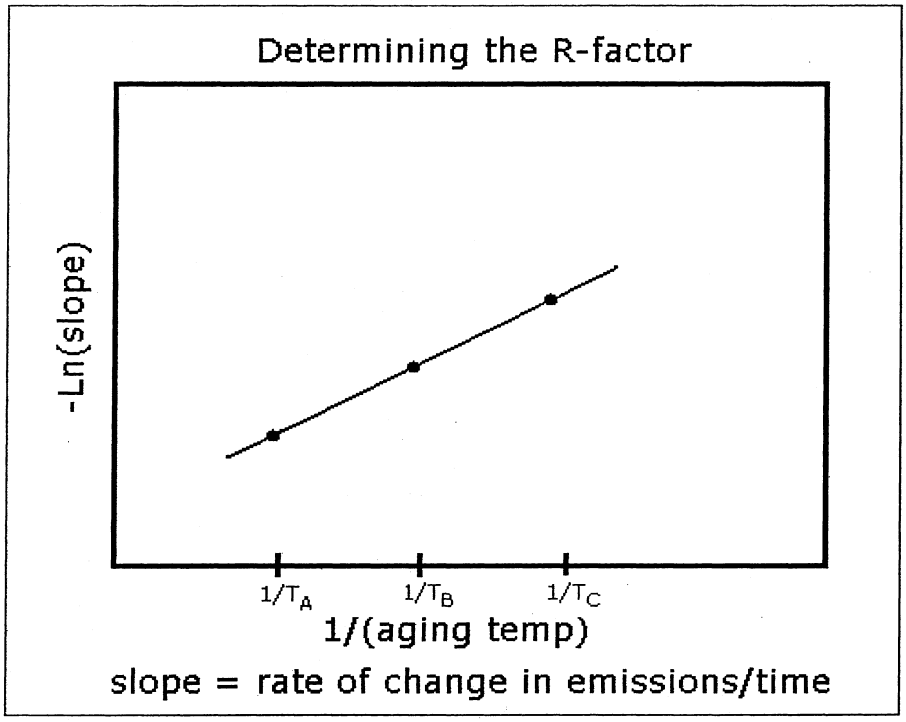

[71 FR 2837, Jan. 17, 2006]

APPENDIX X TO PART 86—SAMPLING PLANS FOR SELECTIVE ENFORCEMENT AUDITING OF HEAVY-DUTY ENGINES AND LIGHT-DUTY TRUCKS

TABLE 1—SAMPLING PLAN CODE LETTER

Annual sales	Code letter
50–99	A.
100–299	B.
300–499	C.
500 or greater	D.

TABLE 2—SAMPLING PLAN FOR CODE LETTER "A"

[Sample inspection criteria]

Stage	Pass No.	Fail No.	Stage	Pass No.	Fail No.
1	(1)	(2)	16	6	11
2	(1)	(2)	17	7	12
3	(1)	(2)	18	7	12
4	0	(2)	19	8	13
5	0	(2)	20	8	13
6	1	6	21	9	14

TABLE 2—SAMPLING PLAN FOR CODE LETTER "A"—Continued

[Sample inspection criteria]

Stage	Pass No.	Fail No.	Stage	Pass No.	Fail No.
7	1	7	22	10	14
8	2	7	23	10	15
9	2	8	24	11	15
10	3	8	25	11	16
11	3	8	26	12	16
12	4	9	27	12	17
13	5	10	28	13	17
14	5	10	29	14	17
15	6	11	30	16	17

[1] Test sample passing not permitted at this stage.
[2] Test sample failure not permitted at this stage.

TABLE 3—SAMPLING PLAN FOR CODE LETTER "B"

[Sample Inspection Criteria]

Stage	Pass No.	Fail No.
1	(1)	(2)
2	(1)	(2)
3	(1)	(2)
4	(1)	(2)
5	0	(2)
6	1	6

TABLE 3—SAMPLING PLAN FOR CODE LETTER "B"—Continued

[Sample Inspection Criteria]

Stage	Pass No.	Fail No.
7	1	7
8	2	7
9	2	8
10	3	8
11	3	9
12	4	9
13	4	10
14	5	10
15	5	11
16	6	12
17	6	12
18	7	13
19	8	13
20	8	14
21	9	14
22	9	15
23	10	15
24	10	16
25	11	16
26	11	17
27	12	17
28	12	18
29	13	18
30	13	19
31	14	19
32	14	20
33	15	20
34	16	21
35	16	21
36	17	22
37	17	22
38	18	22
39	18	22
40	21	22

[1] Test sample passing not permitted at this stage.
[2] Test sample failure not permitted at this stage.

TABLE 4—SAMPLING PLAN FOR CODE LETTER "C"

[Sample Inspection Criteria]

Stage	Pass No.	Fail No.
1	[1]	[2]
2	[1]	[2]
3	[1]	[2]
4	[1]	[2]
5	0	[2]
6	0	6
7	1	7
8	2	7
9	2	8
10	3	9
11	3	9
12	4	10
13	4	10
14	5	11
15	5	11
16	6	12
17	6	12
18	7	13
19	7	13
20	8	14
21	8	14
22	9	15
23	10	15
24	10	16
25	11	16

TABLE 4—SAMPLING PLAN FOR CODE LETTER "C"—Continued

[Sample Inspection Criteria]

Stage	Pass No.	Fail No.
26	11	17
27	12	17
28	12	18
29	13	18
30	13	19
31	14	19
32	14	20
33	15	20
34	15	21
35	16	21
36	16	22
37	17	22
38	18	23
39	18	23
40	19	24
41	19	24
42	20	25
43	20	25
44	21	26
45	21	27
46	22	27
47	22	27
48	23	27
49	23	27
50	26	27

[1] Test sample passing not permitted at this stage.
[2] Test sample failure not permitted at this stage.

TABLE 5—SAMPLING PLAN FOR CODE LETTER "D"

[Sample Inspection Criteria]

Stage	Pass No.	Fail No.
1	([1])	([2])
2	([1])	([2])
3	([1])	([2])
4	([1])	([2])
5	0	([2])
6	0	6
7	1	7
8	2	8
9	2	8
10	3	9
11	3	9
12	4	10
13	4	10
14	5	11
15	5	11
16	6	12
17	6	12
18	7	13
19	7	13
20	8	14
21	8	14
22	9	15
23	9	15
24	10	16
25	11	16
26	11	17
27	12	17
28	12	18
29	13	19
30	13	19
31	14	20
32	14	20
33	15	21
34	15	21

TABLE 5—SAMPLING PLAN FOR CODE LETTER "D"—Continued

[Sample Inspection Criteria]

Stage	Pass No.	Fail No.
35	16	22
36	16	22
37	17	23
38	17	23
39	18	24
40	18	24
41	19	25
42	19	26
43	20	26
44	21	27
45	21	27
46	22	28
47	22	28
48	23	29
49	23	29
50	24	30
51	24	30
52	25	31
53	25	31
54	26	32
55	26	32
56	27	33
57	27	33
58	28	33
59	28	33
60	32	33

[1] Test sample passing not permitted at this stage.
[2] Test sample failure not permitted at this stage.

[48 FR 1414, Jan. 12, 1983, as amended at 48 FR 52209, Nov. 16, 1983]

APPENDIX XI TO PART 86—SAMPLING PLANS FOR SELECTIVE ENFORCEMENT AUDITING OF LIGHT-DUTY VEHICLES

40% AQL

TABLE 1—SAMPLING PLAN CODE LETTER

Annual sales of configuration	Code letter
50–99	A
100–299	B
300–499	C
500 or greater	D

TABLE 2—SAMPLING PLAN FOR CODE LETTER "A" 40% AQL

[Sample inspection criteria]

Stage	Pass No.	Fail No.
1	([1])	([2])
2	([1])	([2])
3	([1])	([2])
4	0	([2])
5	0	([2])
6	1	6
7	1	7
8	2	7
9	2	8
10	3	8
11	3	9
12	4	9

TABLE 2—SAMPLING PLAN FOR CODE LETTER "A" 40% AQL—Continued

[Sample inspection criteria]

Stage	Pass No.	Fail No.
13	5	10
14	5	10
15	6	11
16	6	11
17	7	12
18	7	12
19	8	13
20	8	13
21	9	14
22	10	14
23	10	15
24	11	15
25	11	16
26	12	16
27	12	17
28	13	17
29	14	17
30	16	17

[1] Test sample passing not permitted at this stage.
[2] Test sample failure not permitted at this stage.

TABLE 3—SAMPLING PLAN FOR CODE LETTER "B" 40% AQL

[Sample inspection criteria]

Stage	Pass No.	Fail No.
1	([1])	([2])
2	([1])	([2])
3	([1])	([2])
4	([1])	([2])
5	0	([2])
6	1	6
7	1	7
8	2	7
9	2	8
10	3	8
11	3	9
12	4	9
13	4	10
14	5	10
15	5	11
16	6	12
17	6	12
18	7	13
19	8	13
20	8	14
21	9	14
22	9	15
23	10	15
24	10	16
25	11	16
26	11	17
27	12	17
28	12	18
29	13	18
30	13	19
31	14	19
32	14	20
33	15	20
34	16	21
35	16	21
36	17	22
37	17	22
38	18	22
39	18	22
40	21	22

[1] Test sample passing not permitted at this stage.

[2] Test sample failure not permitted at this stage.

TABLE 4—SAMPLING PLAN FOR CODE LETTER "C" 40% AQL

[Sample inspection criteria]

Stage	Pass No.	Fail No.
1	([1])	([2])
2	([1])	([2])
3	([1])	([2])
4	([1])	([2])
5	0	([2])
6	0	6
7	1	7
8	2	7
9	2	8
10	3	9
11	3	9
12	4	10
13	4	10
14	5	11
15	5	11
16	6	12
17	6	12
18	7	13
19	7	13
20	8	14
21	8	14
22	9	15
23	10	15
24	10	16
25	11	16
26	11	17
27	12	17
28	12	18
29	13	18
30	13	19
31	14	19
32	14	20
33	15	20
34	15	21
35	16	21
36	16	22
37	17	22
38	18	23
39	18	23
40	19	24
41	19	24
42	20	25
43	20	25
44	21	26
45	21	27
46	22	27
47	22	27
48	23	27
49	23	27
50	26	27

[1] Test sample passing not permitted at this stage.
[2] Test sample failure not permitted at this stage.

TABLE 5—SAMPLING PLAN FOR CODE LETTER "D" 40% AQL

[Sample inspection criteria]

Stage	Pass No.	Fail No.
1	([1])	([2])
2	([1])	([2])
3	([1])	([2])
4	([1])	([2])
5	0	([2])
6	0	6
7	1	7

TABLE 5—SAMPLING PLAN FOR CODE LETTER "D" 40% AQL—Continued

[Sample inspection criteria]

Stage	Pass No.	Fail No.
8	2	8
9	2	8
10	3	9
11	3	9
12	4	10
13	4	10
14	5	11
15	5	11
16	6	12
17	6	12
18	7	13
19	7	13
20	8	14
21	8	14
22	9	15
23	9	15
24	10	16
25	11	16
26	11	17
27	12	17
28	12	18
29	13	19
30	13	19
31	14	20
32	14	20
33	15	21
34	15	21
35	16	22
36	16	22
37	17	23
38	17	23
39	18	24
40	18	24
41	19	25
42	19	26
43	20	26
44	21	27
45	21	27
46	22	28
47	22	28
48	23	29
49	23	29
50	24	30
51	24	30
52	25	31
53	25	31
54	26	32
55	26	32
56	27	33
57	27	33
58	28	33
59	28	33
60	32	33

[1] Test sample passing not permitted at this stage.
[2] Test sample failure not permitted at this stage.

[49 FR 48485, Dec. 12, 1984]

APPENDIX XII TO PART 86—TABLES FOR PRODUCTION COMPLIANCE AUDITING OF HEAVY-DUTY ENGINES AND HEAVY-DUTY VEHICLES, INCLUDING LIGHT-DUTY TRUCKS

TABLE 1—COMPLIANCE LEVEL DETERMINATION USING THE PRIMARY PCA SAMPLING PLAN

	Compliance level[2]
PCA test sample size.[1]	
24	15
25	15
26	16
27	17
28	17
29	18
30	18
31	19
32	20
33	20
34	21
35	21
36	22
37	23
38	23
39	24
40	24
41	25
42	26
43	26
44	27
45	27
46	28
47	29
48	29
49	30
50	30
51	31
52	32
53	32
54	33
55	33
56	34
57	35
58	35
59	36
60	36

[1] Including the number of SEA tests if applicable.
[2] Is the test result of the sequence number: (The lowest test result is sequence No. 1).

TABLE 2—VALUES OF K FOR THE REDUCED FIXED PCA SAMPLING PLAN

	Value of K
Sample size:	
3	1.602
4	1.114
5	0.895
6	0.764
7	0.674
8	0.608
9	0.555
10	0.513
11	0.478
12	0.448
13	0.422
14	0.399
15	0.379

TABLE 2—VALUES OF K FOR THE REDUCED FIXED PCA SAMPLING PLAN—Continued

	Value of K
16	0.360
17	0.343
18	0.328
19	0.314
20	0.301
21	0.289
22	0.277
23	0.266

TABLE 3—VALUES OF K FOR THE REDUCED SEQUENTIAL PCA SAMPLING PLAN

	Value of K
Sample size:	
4	1.671
8	0.912
12	0.672
16	0.540
20	0.451

[50 FR 35401, Aug. 30, 1985]

APPENDIX XIII TO PART 86—STATE REQUIREMENTS INCORPORATED BY REFERENCE IN PART 86 OF THE CODE OF FEDERAL REGULATIONS

The following is an informational list of the California regulatory requirements applicable to the National Low Emission Vehicle program (October, 1996) incorporated by reference in part 86 of the Code of Federal Regulations (see §86.1).

CALIFORNIA STATE REGULATIONS

(a) State of California; Air Resources Board: California Assembly-Line Test Procedures for 1983 Through 1997 Model-Year Passenger Cars, Light-Duty Trucks and Medium-Duty Vehicles, adopted November 24, 1981, amended June 24, 1996.

(b) State of California; Air Resources Board: California Assembly-Line Test Procedures for 1998 and Subsequent Model-Year Passenger Cars, Light-Duty Trucks and Medium-Duty Vehicles, adopted June 24, 1996.

(c) California Code of Regulations, Title 13, Division 3, Sections 2108, 2109, 2110.

(d) State of California; Air Resources Board: California Exhaust Emission Standards and Test Procedures for 1988 and Subsequent Model Passenger Cars, Light-Duty Trucks, and Medium-Duty Vehicles, adopted May 20, 1987, amended June 24, 1996, Section 9.a.

(e) State of California; Air Resources Board: California Non-Methane Organic Gas Test Procedures, adopted July 12, 1991, amended June 24, 1996.

(f) State of California; Air Resources Board: Regulations Regarding Malfunction and Diagnostic System Requirements—1994

and Later Passenger Cars, Light-Duty Trucks, and Medium-Duty Vehicles and Engines (OBD II), California Mail Out #95–34, September 26, 1995, excluding paragraphs (d), (m)(4), and (m)(5).

(g) State of California; Air Resources Board: California Motor Vehicle Emission Control Label Specifications, adopted March 1, 1978, amended June 24, 1996, excluding paragraphs 2(b), 3.5, and 10.

[62 FR 31264, June 6, 1997]

APPENDIX XIV TO PART 86—DETERMINATION OF ACCEPTABLE DURABILITY TEST SCHEDULE FOR LIGHT-DUTY VEHICLES AND LIGHT LIGHT-DUTY TRUCKS CERTIFYING TO THE PROVISIONS OF PART 86, SUBPART R

A manufacturer may determine mileage test intervals for durability-data vehicles subject to the conditions specified in §86.1726. The following procedure shall be used to determine if the schedule is acceptable to the Administrator:

1. Select exhaust system mileage test points and maintenance mileage test points for proposed (prop) schedule.

2. Calculate the sums of the squares corrected to the mean of the system mileages at the proposed test points:

$$A_{prop} = [\sum(X_p)^2 - ((\sum X_p)^2 / N_p))_{prop}$$

Where:

X_p = Individual mileages at which the vehicle will be tested.

N_p = Total number of tests (including before and after maintenance tests).

(Subscript ''p'' refers to proposed test schedule).

3. Determine exhaust system mileage test points and maintenance mileage test points based on testing at five thousand mile intervals from 5,000 miles through the final testing point and maintenance mileage test points selected for the proposed schedule in step 1 of this appendix. This schedule will be designated as the standard (std) test schedule.

4. Calculate the sums of squares corrected to the mean of the standard schedule:

$$B_{std}=[\sum(X_s)^2-((\sum X_s)^2/N_s))_{std}$$

Where:

X_s = Individual mileages at which the vehicle will be tested.

N_s = Total number of tests (including before and after maintenance).

(Subscript ''s'' refers to standard test schedule).

5. Refer to table I and determine t_p at $(N_p - 2)_{prop}$ degrees of freedom and t_s at $(N_s - 2)_{std}$.

6. If $(A_{prop})^{1/2} \geq t_p/t_s \times (B_{std})^{1/2}$ the proposed plan is acceptable.

TABLE I TO APPENDIX XIV

Degrees of freedom (N–2)	t
1	6.314
2	2.920
3	2.353
4	2.132
5	2.015
6	1.943
7	1.895
8	1.860
9	1.833
10	1.812
11	1.796
12	1.782
13	1.771
14	1.761
15	1.753
16	1.746
17	1.740
18	1.734
19	1.729
20	1.725
21	1.721
22	1.717
23	1.714
24	1.711
25	1.708

[62 FR 31264, June 6, 1997]

APPENDIX XV TO PART 86—PROCEDURE FOR DETERMINING AN ACCEPTABLE EXHAUST REGENERATION DURABILITY-DATA TEST SCHEDULE FOR DIESEL CYCLE VEHICLES EQUIPPED WITH PERIODICALLY REGENERATING TRAP OXIDIZER SYSTEMS CERTIFYING TO THE PROVISIONS OF PART 86, SUBPART R

1. Select exhaust system mileage test points for proposed (prop) schedule.

2. Calculate the sums of the squares corrected to the mean of the system mileages at the proposed test points:

$$A_{prop} = [\sum(X_p)^2 - ((\sum X_p)^2 / N_p))_{prop}$$

Where:

X_p = Individual mileages at which the vehicle will be tested.

N_p = Total number of tests (including before and after maintenance tests).

(Subscript ''p'' refers to proposed test schedule).

3. The exhaust system mileage tests points at 5,000, 25,000, 50,000, 75,000, and 100,000 miles will be designated as the standard (std) test schedule.

4. Calculate the sums of square corrected to the mean of the standard tests schedule:

$$B_{std} = [\sum(X_s)^2 - ((\sum X_s)^2 / N_s))_{std}$$

Where:

X_s = Individual mileages at which the vehicle will be tested.

N_s = Total number of regeneration emission tests.

(Subscript ''s'' refers to standard test schedule)

5. Refer to table I and determine t_p at $(N_p - 2)_{prop}$ degrees of freedom and t_s at $(N_s - 2)_{std}$ degrees of freedom.

6. If $(A_{prop})^{1/2} \geq t_p / t_s \times (B_{std})^{1/2}$ the proposed plan is acceptable.

TABLE I TO APPENDIX XV

Degrees of freedom (N–2)	t
1	6.314
2	2.920
3	2.353
4	2.132
5	2.015
6	1.943
7	1.895
8	1.860
9	1.833
10	1.812
11	1.796
12	1.782
13	1.771
14	1.761
15	1.753

[62 FR 31264, June 6, 1997]

APPENDIX XVI TO PART 86—POLLUTANT MASS EMISSIONS CALCULATION PROCEDURE FOR GASEOUS-FUELED VEHICLES AND FOR VEHICLES EQUIPPED WITH PERIODICALLY REGENERATING TRAP OXIDIZER SYSTEMS CERTIFYING TO THE PROVISIONS OF PART 86, SUBPART R

(a) Gaseous-Fueled Vehicle Pollutant Mass Emission Calculation Procedure.

(1) For all TLEVs, LEVs, and ULEVs, the calculation procedures specified in Chapter 5 of the California Regulatory Requirements Applicable to the National Low Emission Vehicle Program (October, 1996) shall apply. These procedures are incorporated by reference (see §86.1).

(b) Pollutant Mass Emissions Calculation Procedure for Vehicles Equipped with Periodically Regenerating Trap Oxidizer Systems.

(1) Exhaust Emissions. (i) The provisions of §86.1777 apply to vehicles equipped with periodically regenerating trap oxidizer systems, except that the following shall apply instead of the requirements in §86.144–94(a):

(ii) The final reported test results shall be computed by the use of the following formula:

(iii) For light-duty vehicles and light-duty trucks:

Y_{wm} = 0.43 ((Yct + Ys) / (Dct + Ds)) + 0.57 ((Yht + Ys) / (Dht + Ds)).

(iv) For purposes of adjusting emissions for regeneration:

Re = ((Yr1 − Yct) + (Yr2 − Ys) + (Yr3 − Yht)) / (Dct + Ds + Dht).

Yr = Ywm + Re.

Where:

Ywm = Weighted mass emissions of each pollutant, i.e., HC, CO, NO_X or CO , in grams per vehicle mile.

Yct = Mass emissions as calculated from the ''transient'' phase of the cold start test, in grams per test phase.

Yht = Mass emissions as calculated from the ''transient'' phase of the hot start test in grams per test phase.

Ys = Mass emissions as calculated from the ''stabilized'' phase of the cold start test, in grams per test phase.

Dct = The measured driving distance from the ''transient'' phase of the cold start test, in miles.

Dht = The measured distance from the ''transient'' phase of the hot start test, in miles.

Ds = The measured driving distance from the ''stabilized'' phase of the cold start test, in miles.

Yr = Regeneration emission test.

Re = Mass emissions of each pollutant attributable to regeneration in grams per mile.

Yr1 = Mass emissions, during a regeneration emission test, as calculated from the ''transient'' phase of the cold start test, in grams per test phase.

Yr2 = Mass emissions, during a regeneration emission test, as calculated from the ''stabilized'' phase of the cold start test, in grams per test phase.

Yr3 = Mass emissions, during a regeneration emission test, as calculated from the ''transient'' phase of the hot start test in grams per test phase.

(2) Particulate Emissions. (i) The provisions of §86.1778 apply to vehicles equipped with periodically regenerating trap oxidizer systems, except that the following shall apply instead of the requirements §86.145–82(a):

(ii) The final reported test results for the mass particulate (Mp) in grams/mile shall be computed as follows.

(iii) For purposes of adjusting emissions for regeneration:

Mp = 0.43(Mp1 + Mp2) / (Dct + Ds) + 0.57 (Mp3 + Mp2) / (Dht + Ds)

Re = ((Mpr1 − Mp1) + (Mpr2 − Mp2) + (Mpr3 − Mp3) / (Dct + Ds + Dht)

Mpr = Mp + Re

Where:

(1) Mp1 = Mass of particulate determined from the ''transient'' phase of the cold start test, in grams per test phase. (See §86.110–94(d)(1) for determination.)

(2) Mp2 = Mass of particulate determined from the ''stabilized'' phase of the cold start test, in grams per test phase. (See §86.110–94(d)(1) for determination.)
(3) Mp3 = Mass of particulate determined from the ''transient'' phase of the hot start test, in grams per test phase. (See §86.110–94(d)(1) for determination.)
(4) Dct = The measured driving distance from the ''transient'' phase of the cold start test, in miles.
(5) Ds = The measured driving distance from the ''stabilized'' phase of the cold start test, in miles.
(6) Dht = The measured driving distance from the ''transient'' phase of the hot start test, in miles.
(7) Mpr = Regeneration emission test
(8) Re = Mass of particulate attributable to regeneration in grams/mile.
(9) Mpr1 = Mass of particulate determined, during a regeneration emission test, from the ''transient'' phase of the cold start test in grams per test phase. (See §86.110–94(d)(1) for determination.)
(10) Mpr2 = Mass of particulate determined, during a regeneration emission test, from ''stabilized'' phase of the cold start test, in grams per test phase. (See §86.110–94(d)(1) for determination.)
(11) Mpr3 = Mass of particulate determined, during a regeneration emission test, from the ''transient'' phase of the hot start test, in grams per test phase. (See §86.110–94(d)(1) for determination.)

(c) Fuel Economy Calculations for Gaseous Fuels Based on the Cold Start CVS–1975 Federal Test Procedure.

(1) Assume the fuel meets HD–5 specifications (95% C_3H_8, 5% nC_4H_{10}, by volume).

(i) Physical constants of Propane and Normal Butane:

Component	Mol. Wt.	Sp. Gr.	Liquid density (lb/gal @ 60 °F)		Liquid density of Hd–5 (lb/gal @ 60 °F)		
C_3H_8	44.094	0.508	4.235	×	0.95	=	4.0233
nC_4H_{10}	58.12	0.584	4.868	×	0.05	=	0.2434
							4.2667

(ii) Density of the HD–5 fuel:

(0.95 × 4.235) + (0.05 × 4.868) = 4.267 lb/gal @ 60 °F

(iii) Molecular Weights:

(A)

Species	Mol. Wt.
C	12.01115
H	1.00797
0	15.9994
CO	28.01055
CO_2	44.00995
$CH_{2.658}$*	14.6903

*Average ratio of Hydrogen to carbon atoms in HD–5 fuel.

(B)

C_3H_8	8/3	=	2.666×0.95 (% propane)	=	2.533
nC_4H_{10}	10/4	=	2.5×0.05 (% Butane)	=	0.125
					2.568

(iv) Weight of Carbon in:

CO = wt. of CO × (12.01115 / 28.01055) = wt CO × (0.429)

CO_2 = wt. of CO_2 × (12.01115 / 44.00995) wt CO_2 × (0.273)

$CH_{2.658}$ = wt. of $CH_{2.658}$ × (12.01115 / 14.6903) = wt $CH_{2.658}$ × (0.818)

(v) Wt. of Carbon per gallon of LPG:

wt. of carbon = 4.2667 lbs/gal × 453.59 gms/lb × 0.818 = 1583 grams C/gal HD–5

(vi) Fuel economy:

$$\frac{\text{grams C/gal}}{\text{grams C in exhaust/mi}} = \text{miles/gal}$$

$$\text{LPG} = \frac{1583 \text{ gms C/gal}}{(0.818)(\text{HC}) + (0.429)(\text{CO}) + (0.273)(\text{CO}_2)}$$

Where:

HC = CVS HC in grams/mile
CO = CVS CO in grams/mile
CO_2 = CVS CO_2 in grams/mile
For gasoline:
= 2421 / ((0.866)(HC) + (0.429)(CO) + (0.273)(CO_2))
For Natural Gas:
= 1535 / ((0.759)(HC) + (0.429)(CO) + (0.273)(CO_2))

[62 FR 31265, June 6, 1997]

APPENDIX XVII TO PART 86—PROCEDURE FOR DETERMINING VEHICLE EMISSION CONTROL TECHNOLOGY CATEGORY/FUEL REACTIVITY ADJUSTMENT FACTORS FOR LIGHT-DUTY VEHICLES AND LIGHT LIGHT-DUTY TRUCKS CERTIFYING TO THE PROVISIONS OF PART 86, SUBPART R

The following procedure shall be used by the Administrator to establish the reactivity adjustment factor for exhaust emissions of non-methane organic gases (NMOG) and establish the ''methane reactivity adjustment factor'' for exhaust methane emissions from

natural gas vehicles, for the purpose of certifying a vehicle of specific emission control technology category and fuel for the National LEV program provisions of subpart R of this part.

(a) The Administrator shall determine representative speciated NMOG exhaust emission profiles for light-duty conventional gasoline-fueled TLEVs, LEVs, and ULEVs according to the following conditions:

(1) All testing will be conducted using a specified gasoline blend representative of commercial gasoline and having the specifications listed in §86.1771.

(2) Speciated NMOG profiles shall be obtained from a statistically valid number of TLEVs, LEVs, and ULEVs.

(3) The speciated NMOG profiles shall identify and quantify, in units of g/mile or mg/mile, as many constituents as possible in accordance with the procedures specified in Chapter 5 of the California Regulatory Requirements Applicable to the National Low Emission Vehicle Program (October, 1996). These procedures are incorporated by reference (see §86.1).

(b) The ''g ozone potential per mile'' of each NMOG identified in the speciated profile shall be determined by multiplying the ''g/mile NMOG'' emission value of the constituent NMOG by its maximum incremental reactivity in paragraph (j) of this appendix.

(c) The ''total g ozone potential per mile'' of NMOG exhaust emissions from the vehicle/fuel system shall be the sum of all the constituent NMOG ''g ozone potential per mile'' values calculated in paragraph (b) of this appendix.

(d) The ''g ozone potential per g NMOG'' for the vehicle/fuel system shall be determined by dividing the ''total g ozone potential per mile'' value calculated in paragraph (c) of this appendix by the ''total g/mile of NMOG emissions''.

(e) For light-duty candidate vehicle/fuel systems not powered by conventional gasoline, the Administrator shall establish ''reactivity adjustment factors'' calculated from exhaust emission profiles derived according to the same conditions specified in paragraphs (a)(1) and (a)(2) of this appendix.

(f) The ''g ozone potential per g NMOG'' for candidate vehicle/fuel systems not powered by conventional gasoline shall be determined according to paragraphs (b), (c), and (d) of this appendix.

(g)(1) The candidate vehicle/fuel ''reactivity adjustment factor'' shall be determined by dividing the ''g ozone potential per g NMOG'' calculated in paragraph (f) of this appendix by the ''g ozone potential per g NMOG'' value for the vehicle in the same emission control technology category operated on conventional gasoline. The ''g ozone potential per g NMOG'' values for conventional gasoline vehicles are listed in §86.1777(b)(5) or shall be established by the Administrator pursuant to this appendix. For candidate vehicle/fuel systems powered by methanol or liquefied petroleum gas, the quotient calculated above shall be multiplied by 1.1. The resulting value shall constitute the ''reactivity adjustment factor'' for the methanol or liquefied petroleum gas-powered vehicle/fuel system.

(2) For candidate vehicle/fuel systems operating on natural gas, a ''methane reactivity adjustment factor'' shall be calculated by dividing the maximum incremental reactivity value for methane given in paragraph (j) of this appendix by the ''g ozone potential per g NMOG'' value for the vehicle in the same emission control technology category operated on conventional gasoline as listed in §86.1777(b)(5) or established by the Administrator pursuant to this appendix.

(h) The Administrator shall assign a reactivity adjustment factor unique to a specific engine family at the request of a vehicle manufacturer provided that each of the following occurs:

(1)(i) The manufacturer submits speciated NMOG exhaust emission profiles to the Administrator obtained from emission testing a minimum of four different vehicles representative of vehicles that will be certified in the engine family. The test vehicles shall include the official emission-data vehicle(s) for the engine family, and the mileage accumulation of each vehicle shall be at or greater than 4000 miles. One speciated profile shall be submitted for each test vehicle. Emission levels of each constituent NMOG shall be measured according to Chapter 5 of the California Regulatory Requirements Applicable to the National Low Emission Vehicle Program (October, 1996). These procedures are incorporated by reference (see §86.1). For the emission-data vehicle(s), the speciated profile(s) shall be obtained from the same test used to obtain the official exhaust emission test results for the emission-data vehicle at the 4,000 mile test point. The manufacturer shall calculate ''g ozone potential per g NMOG'' values for each speciated NMOG exhaust emission profile in accordance with the procedures specified in paragraphs (b), (c), and (d) of this appendix. By using these ''g ozone potential per g NMOG'' values, the manufacturer shall calculate a ''reactivity adjustment factor'' for each test vehicle in accordance with the procedure specified in paragraph (g) of this appendix. A ''reactivity adjustment factor'' for the engine family shall be calculated by taking the arithmetic mean of the ''reactivity adjustment factor'' obtained for each test vehicle. The 95 percent upper confidence bound (95% UCB) shall be calculated according to the equation:

$$95\%\ \mathrm{UCB} = \mathrm{RAF}_m + 1.96 \times \left[\frac{\sum_{i=1}^{n} \left(\mathrm{RAF}_i - \mathrm{RAF}_m\right)^2}{(n-1)} \right]^{1/2}$$

Where:

RAF_m = mean ''reactivity adjustment factor'' calculated for the engine family.

RAF_i = ''reactivity adjustment factor'' calculated for the i'th test vehicle.

n = number of test vehicles.

(ii) The 95 percent upper confidence bound of the ''reactivity adjustment factor'' for the engine family shall be less than or equal to 115 percent of the engine family ''reactivity adjustment factor.''

(2) The manufacturer submits an ''ozone deterioration factor'' for the engine family. To determine the ''ozone deterioration factor,'' the manufacturer shall perform two tests at each mileage interval for one or more durability vehicle(s) tested in accordance with the procedures and conditions specified in subpart R of this part for calculating mass deterioration factors. The Administrator shall approve the use of other mileage intervals and procedures if the manufacturer can demonstrate that equivalently representative ''ozone deterioration factors'' are obtained. One speciated profile shall be submitted for each test. Emission levels of each constituent NMOG shall be measured according to Chapter 5 of the California Regulatory Requirements Applicable to the National Low Emission Vehicle Program (October, 1996). These procedures are incorporated by reference (see §86.1). A mean g/mi NMOG mass value and a mean ''g ozone per g NMOG'' value shall be calculated by taking the arithmetic mean of each measurement from the speciated profiles. These results shall be multiplied together to obtain a mean ''total g ozone potential per mile'' value at each mileage interval. A mean ''ozone deterioration factor'' shall be calculated in accordance with the procedures in §86.1777 and this appendix except that the mean total ''g ozone potential per mile'' value determined at each mileage interval shall be used in place of measured mass emissions. If the ''ozone deterioration factor'' is determined to be less than 1.00, the ''ozone deterioration factor'' shall be assigned a value of 1.00. The ''ozone deterioration factor'' shall be multiplied by the product of the official exhaust NMOG mass emission results at the 4000 mile test point and the mean ''reactivity adjustment factor'' for the engine family to obtain the NMOG certification levels used to determine compliance with the NMOG emission standards.

(3) The speciated profiles, mean ''reactivity adjustment factor'' for the engine family, and ''ozone deterioration factor'' are provided to the Administrator with the certification application for the engine family.

(i) Gasoline meeting the specifications listed in the following tables shall be used to determine the ''g ozone potential per g NMOG'' of conventional gasoline (the test methods used for each fuel property shall be the same as the test method for the identical fuel property listed in §86.1771):

Fuel property	Limit
Sulfur, ppm by weight	300 ±50
Benzene, volume percent	1.6 ±0.3
Reid vapor pressure, psi	8.7 ±0.3
Distillation, D–86 degrees F	
10%	115–135
50%, maximum	240
90%	323–333
EP, maximum	420
Hydrocarbon Type, volume percent	
Total Aromatics	32 ±3.0
Multi-substituted alkyl aromatics	21 ±3.0
Olefins	12 ±3.0
Saturates	remainder

(j) The maximum incremental reactivities to be used in paragraph (b) of this appendix are provided in the table in this paragraph (j). Any manufacturer which intends to use the table shall submit to the Administrator a list which provides the specific organic gases measured by the manufacturer and the maximum incremental reactivity value assigned to each organic gas prior to or with the submittal of a request for the use of a reactivity adjustment factor unique to a specific engine family. The Administrator may deny such requests if he or she determines that the maximum incremental reactivity value assignments are made incorrectly. The table follows:

MAXIMUM INCREMENTAL REACTIVITY (MIR) VALUES

[Units: grams ozone/gram organic gas]

CAS#	Compound	MIR
	Alcohols	
00067–56–1	methanol	0.56
00064–17–5	ethanol	1.34
	Light End and Mid-Range Hydrocarbons (Listed in approximate elution order)	
	methane	0.0148
00074–85–1	ethene	7.29
00074–86–2	ethyne	0.50
00074–84–0	ethane	0.25
00115–07–1	propene	9.40
00074–98–6	propane	0.48
00463–49–0	1,2-propadiene	10.89
00074–99–7	1-propyne	4.10
00075–28–5	methylpropane	1.21
00115–11–7	2-methylpropene	5.31

MAXIMUM INCREMENTAL REACTIVITY (MIR) VALUES—Continued

[Units: grams ozone/gram organic gas]

CAS#	Compound	MIR
00106–98–9	1-butene	8.91
00106–99–0	1,3-butadiene	10.89
00106–97–8	n-butane	1.02
00624–64–6	trans-2-butene	9.94
00463–82–1	2,2-dimethylpropane	0.37
00107–00–6	1-butyne	9.24
00590–18–1	cis-2-butene	9.94
00563–45–1	3-methyl-1-butene	6.22
00078–78–4	2-methylbutane	1.38
00503–17–3	2-butyne	9.24
00109–67–1	1-pentene	6.22
00563–46–2	2-methyl-1-butene	4.90
00109–66–0	n-pentane	1.
00078–79–5	2-methyl-1,3-butadiene	9.08
00646–04–8	trans-2-pentene	8.80
00558–37–2	3,3-dimethyl-1-butene	4.42
00627–20–3	cis-2-pentene	8.80
00689–97–4	1-buten-3-yne	9.24
00513–35–9	2-methyl-2-butene	6.41
00542–92–7	1,3-cyclopentadiene	7.66
00075–83–2	2,2-dimethylbutane	0.82
00142–29–0	cyclopentene	7.66
00691–37–2	4-methyl-1-pentene	4.42
00760–20–3	3-methyl-1-pentene	4.42
00287–92–3	cyclopentane	2.38
00079–29–8	2,3-dimethylbutane	1.07
01634–04–4	1-methyl-tert-butyl-ether	0.62
00691–38–3	4-methyl-cis-2-pentene	6.69
00107–83–5	2-methylpentane	1.53
00674–76–0	4-methyl-trans-2-pentene	6.69
00096–14–0	3-methylpentane	1.52
00763–29–1	2-methyl-1-pentene	4.42
00592–41–6	1-hexene	4.42
00110–54–3	n-hexane	0.98
13269–52–8	trans-3-hexene	6.69
07642–09–3	cis-3-hexene	6.69
04050–45–7	trans-2-hexene	6.69
00616–12–6	3-methyl-trans-2-pentene	6.69
00625–27–4	2-methyl-2-pentene	6.69
01120–62–3	3-methylcyclopentene	5.65
07688–21–3	cis-2-hexene	6.69
00637–92–3	1-ethyl-tert-butyl-ether	1.98
00922–62–3	3-methyl-cis-2-pentene	6.69
00590–35–2	2,2-dimethylpentane	1.40
00096–37–7	methylcyclopentane	2.82
00108–08–7	2,4-dimethylpentane	1.78
00464–06–2	2,2,3-trimethylbutane	1.32
07385–78–6	3,4-dimethyl-1-pentene	3.48
00693–89–0	1-methylcyclopentene	7.66
00071–43–2	benzene	0.42
03404–61–3	3-methyl-1-hexene	3.48
00562–49–2	3,3-dimethylpentane	0.71
00110–82–7	cyclohexane	1.28
00591–76–4	2-methylhexane	1.08
00565–59–3	2,3-dimethylpentane	1.51
00110–83–8	cyclohexene	5.67
00589–34–4	3-methylhexane	1.40
02532–58–3	cis-1,3-dimethylcyclopentane	2.55
00617–78–7	3-ethylpentane	1.40
00822–50–4	trans-1,2-dimethylcyclopentane	1.85
00592–76–7	1-heptene	3.48
00540–84–1	2,2,4-trimethylpentane	0.93
14686–14–7	trans-3-heptene	5.53
00142–82–5	n-heptane	0.81
02738–19–4	2-methyl-2-hexene	5.53
03899–36–3	3-methyl-trans-3-hexene	5.53
14686–13–6	trans-2-heptene	5.53
00816–79–5	3-ethyl-2-pentene	5.53
00107–39–1	2,4,4-trimethyl-1-pentene	2.69

MAXIMUM INCREMENTAL REACTIVITY (MIR) VALUES—Continued

[Units: grams ozone/gram organic gas]

CAS#	Compound	MIR
10574–37–5	2,3-dimethyl-2-pentene	5.53
06443–92–1	cis-2-heptene	5.53
00108–87–2	methylcyclohexane	1.85
00590–73–8	2,2-dimethylhexane	1.20
00107–40–4	2,4,4-trimethyl-2-pentene	5.29
01640–89–7	ethylcyclopentane	2.31
00592–13–2	2,5-dimethylhexane	1.63
00589–43–5	2,4-dimethylhexane	1.50
00563–16–6	3,3-dimethylhexane	1.20
00565–75–3	2,3,4-trimethylpentane	1.60
00560–21–4	2,3,3-trimethylpentane	1.20
00108–88–3	toluene	2.73
00584–94–1	2,3-dimethylhexane	1.32
00592–27–8	2-methylheptane	0.96
00589–53–7	4-methylheptane	1.20
00589–81–1	3-methylheptane	0.99
15890–40–1	(1a,2a,3b) -1,2,3-trimethylcyclopentane.	1.94
00638– –0	cis-1,3-dimethylcyclohexane	1.94
02207– –7	trans-1,4-dimethylcyclohexane	1.94
03522–94–9	2,2,5-trimethylhexane	0.97
00111–66–0	1-octene	2.69
14850–23–8	trans-4-octene	5.29
00111–65–9	n-octane	0.61
13389–42–9	trans-2-octene	5.29
02207–03–6	trans-1,3-dimethylcyclohexane	1.94
07642– –8	cis-2-octene	5.29
01069–53–0	2,3,5-trimethylhexane	1.14
02213–23–2	2,4-dimethylheptane	1.34
02207–01–4	cis-1,2-dimethylcyclohexane	1.94
01678–91–7	ethylcyclohexane	1.94
00926–82–9	3,5-dimethylheptane	1.14
00100–41–4	ethylbenzene	2.70
03074–71–3	2,3-dimethylheptane	1.14
00108–38–3	m-&p-xylene	7.64
02216–34–4	4-methyloctane	1.14
03221–61–2	2-methyloctane	1.14
02216–33–3	3-methyloctane	1.14
00100–42–5	styrene(ethenylbenzene)	2.22
00095–47–6	o-xylene	6.46
00124–11–8	1-nonene	2.23
00111–84–2	n-nonane	0.54
00098–82–8	(1-methylethyl)benzene	2.24
15869–87–1	2,2-dimethyloctane	1.01
04032–94–4	2,4-dimethyloctane	1.01
00103–65–1	n-propylbenzene	2.12
00620–14–4	1-methyl-3-ethylbenzene	7.20
00622–96–8	1-methyl-4-ethylbenzene	7.20
00108–67–8	1,3,5-trimethylbenzene	10.12
00611–14–3	1-methyl-2-ethylbenzene	7.20
00095–63–6	1,2,4-trimethylbenzene	8.83
00124–18–5	n-decane	0.47
00538–93–2	(2-methylpropyl)benzene	1.87
00135–98–8	(1-methylpropyl)benzene	1.89
00535–77–3	1-methyl-3-(1-methylethyl)benzene.	6.45
00526–73–8	1,2,3-trimethylbenzene	8.85
00099–87–6	1-methyl-4-(1-methylethyl)benzene.	6.45
00496–11–7	2,3-dihydroindene(indan)	1.06
00527–84–4	1-methyl-2-(1-methylethyl)benzene.	6.45
00141–93–5	1,3-diethylbenzene	6.45
00105–05–5	1,4-diethylbenzene	6.45
01074–43–7	1-methyl-3-n-propylbenzene	6.45
01074–55–1	1-methyl-4-n-propylbenzene	6.45
00135–01–3	1,2-diethylbenzene	6.45
01074–17–5	1-methyl-2-n-propylbenzene	6.45
01758–88–9	1,4-dimethyl-2-ethylbenzene	9.07

MAXIMUM INCREMENTAL REACTIVITY (MIR) VALUES—Continued

[Units: grams ozone/gram organic gas]

CAS#	Compound	MIR
00874–41–9	1,3-dimethyl-4-ethylbenzene	9.07
00934–80–5	1,2-dimethyl-4-ethylbenzene	9.07
02870–04–4	1,3-dimethyl-2-ethylbenzene	9.07
01120–21–4	n-undecane(hendecane)	0.42
00933–98–2	1,2-dimethyl-3-ethylbenzene	9.07
00095–93–2	1,2,4,5-tetramethylbenzene	9.07
03968–85–2	(2-methylbutyl)benzene	1.07
00527–53–7	1,2,3,5-tetramethylbenzene	9.07
01074–92–6	1-(1,1-dimethylethyl)-2-methylbenzene.	5.84
00488–23–3	1,2,3,4-tetramethylbenzene	9.07
00538–68–1	n-pentylbenzene	1.70
00098–19–1	1-(1,1-dimethylethyl)-3,5-DMbenzene.	7.50
00091–20–3	naphthalene	1.18
00112–40–3	n-dodecane	0.38
Carbonyl Compounds		
00050–00–0	formaldehyde	7.15
00075–07–0	acetaldehyde	5.52
00107–02–8	acrolein	6.77
00067–64–1	acetone	0.56
00123–33–6	propionaldehyde	6.53
00123–72–8	butyraldehyde	5.26
00066–25–1	hexanaldehyde	3.79
00100–52–7	benzaldehyde	-0.55
00078–93–3	methyl ethyl ketone (2-butanone).	1.18
00078–85–3	methacrolein	6.77
04170–30–3	crotonaldehyde	5.42
00110–62–3	valeraldehyde	4.41
00620–23–5	m-tolualdehyde	-0.55

[62 FR 31266, June 6, 1997]

APPENDIX XVIII TO PART 86—STATISTICAL OUTLIER IDENTIFICATION PROCEDURE FOR LIGHT-DUTY VEHICLES AND LIGHT LIGHT-DUTY TRUCKS CERTIFYING TO THE PROVISIONS OF PART 86, SUBPART R

Residual normal deviates to indicate outliers are used routinely and usefully in analyzing regression data, but suffer theoretical deficiencies if statistical significance tests are required. Consequently, the procedure for testing for outliers outlined by Snedecor and Cochran, 6th ed., *Statistical Methods*, PP. 157–158, will be used. The method will be described generally, then by appropriate formulae, and finally a numerical example will be given.

(a) Linearity is assumed (as in the rest of the deterioration factor calculation procedure), and each contaminant is treated separately. The procedure is as follows:

(1) Calculate the deterioration factor regression as usual, and determine the largest residual in absolute value. Then recalculate the regression with the suspected outlier omitted. From the new regression line calculate the residual at the deleted point, denoted as $(y_i - y_i')$. Obtain a statistic by dividing $(y_i - y_i')$ by the square root of the estimated variance of $(y_i - y_i')$. Find the tailed probability, p, from the t-distribution corresponding to the quotient (double-tailed), with n-3 degrees of freedom, with n the original sample size.

(2) This probability, p, assumes the suspected outlier is randomly selected, which is not true. Therefore, the outlier will be rejected only if $1 - (1\text{-}p)^n < 0.05$.

(3) The procedure will be repeated for each contaminant individually until the above procedure indicates no outliers are present.

(4) When an outlier is found, the vehicle test-log will be examined. If an unusual vehicle malfunction is indicated, data for all contaminants at that test-point will be rejected; otherwise, only the identified outlier will be omitted in calculating the deterioration factor.

(b) Procedure for the calculation of the t-Statistic for Deterioration Data Outlier Test.

(1) Given a set of n points, (x_1, y_1), $(x_2. y_2)$ * * * (x_n, y_n).

Where:

x_i is the mileage of the ith data point.

y_i is the emission of the ith data point.

Assume model:

$y = a + \beta(x - \bar{x}) + \epsilon$

(2)(i) Calculate the regression line.

$\hat{y} = a + b(x - \bar{x})$

(ii) Suppose the absolute value of the ith residual

$(y_i - \hat{y}_i)$ is the largest.

(3)(i) Calculate the regression line with the ith point deleted.

$\hat{y}' = a' + b'(x - \bar{x})$

(ii)

$$\text{Let } t = \frac{\left((y_i - \hat{y}_i^{'}\right)}{\sqrt{\hat{\text{var}}\left(y_i - \hat{y}_i^{'}\right)}}$$

Where:

y_1 is the observed suspected outlier.

$\hat{y}'_i$ is the predicted value with the suspected outlier deleted.

$$\hat{\text{var}}\left(y_i - \hat{y}_i^{'}\right) = S_2\left(1 + \frac{1}{n-1} + \frac{(x_i - x)^2}{\sum_{j=1}^{n}(x - \bar{x})^2}\right), j \neq i$$

(x is calculated without the suspected outlier)

$$S_2 = \frac{\sum_{j=1}^{n}\left(y_j - \bar{y}_j^{'}\right)^2}{n-3}, j \neq i$$

(iii) Find p from the t-statistic table

Where:

p = prob (|t(n-3) | ≥ t)

t(n–3) is a t-distributed variable with n–3 degrees of freedom.

(iv) y_i is an outlier if $1-(1-p)^n < .05$

x	y	ŷ	y − ŷ
8	59	56.14	2.86
6	58	58.17	−0.17
11	56	53.10	2.90
22 [1]	53	41.96	11.04
14	50	50.06	−0.06
17	45	47.03	−2.03
18	43	46.01	−3.01
24	42	39.94	2.06
19	39	45.00	−6.00
23	38	40.95	−2.95
26	30	37.91	−7.91
40	27	23.73	3.27

[1] Suspected outlier.

(4)(i) Assume model:

$y = a + \beta(x - \bar{x}) + \epsilon$

$y = 45 - 1.013(x - \bar{x})$

(ii) Suspected point out of regression:

$y = 44.273 - 1.053(x - \bar{x})$

$y = 44.273 - 1.053(22 - 18.727) = 40.827$

$y_i - \hat{y}'_i = 12.173$

$$\hat{var}\left(y_i - \hat{y}_i^{'}\right) = S^2\left(1 + \frac{1}{11} + \frac{10.711}{914.182}\right)$$

[62 FR 31270, June 6, 1997; 62 FR 45289, Aug. 26, 1997, as amended at 63 FR 987, Jan. 7, 1998]

FINDING AIDS

A list of CFR titles, subtitles, chapters, subchapters and parts and an alphabetical list of agencies publishing in the CFR are included in the CFR Index and Finding Aids volume to the Code of Federal Regulations which is published separately and revised annually.

Material Approved for Incorporation by Reference
Table of CFR Titles and Chapters
Alphabetical List of Agencies Appearing in the CFR
List of CFR Sections Affected

Material Approved for Incorporation by Reference

(Revised as of July 1, 2006)

The Director of the Federal Register has approved under 5 U.S.C. 552(a) and 1 CFR Part 51 the incorporation by reference of the following publications. This list contains only those incorporations by reference effective as of the revision date of this volume. Incorporations by reference found within a regulation are effective upon the effective date of that regulation. For more information on incorporation by reference, see the preliminary pages of this volume.

40 CFR (PART 86, 86.600-1 TO END)
ENVIRONMENTAL PROTECTION AGENCY

	40 CFR
American National Standards Institute 25 West 43rd Street, Fourth floor, New York, NY 10036; Telephone: (212) 642–4900	
ANSI/AGA NGV1–1994, Standard for Compressed Natural Gas Vehicle (NGV) Fueling Connection Devices.	86.1810–01
American Society for Testing and Materials 100 Barr Harbor Drive, West Conshohocken, PA 19428–2959; Telephone: (610) 832–9585, FAX: (610) 832–9555	
ASTM D 975–04c, Standard Specification for Diesel Fuel Oils	86.1910
ASTM D 1945–91, Standard Test Method for Analysis of Natural Gas by Gas Chromatography.	86.1213–94; 86.1313–94
ASTM D 2163–91, Standard Test Method for Analysis of Liquefied Petroleum (LP) Gases and Propene Concentrates by Gas Chromatography.	86.1213–94; 86.1313–94
ASTM D 5186–91, Standard Test Method for Determination of Aromatic Content of Diesel Fuels by Supercritical Fluid Chromatography.	86.1313–91; 86.1313–94; 86.1313–98
ASTM E 29–67 (Reapproved 1980) Standard Recommended Practice for Indicating Which Places of Figures Are To Be Considered Significant In Specified Limiting Values.	86.1105–87
ASTM E 29–90, Standard Practice for Using Significant Digits in Test Data to Determine Conformance with Specifications.	86.609–96; 86.1009–84; 86.1009–96; 86.1442
ASTM E 29–93a, Standard Practice for Using Significant Digits in Test Data to Determine Conformance with Specification.	86.1803–01; 86.1823–01; 86.1824–01; 86.1825–01; 86.1837–01
ASTM F 1471–93, Standard Test Method for Air Cleaning Performance of a High-Efficiency Particulate Air-Filter System.	86.1310-2007
International Organization for Standardization Case Postale 56, CH–1211 Geneva 20, Switzerland	
ISO 9141–2, Road Vehicles—Diagnostic Systems Part 2: CARB Requirements for Interchange of Digital Information, February 1994.	86.1806–04; 86.1806-05
ISO 14230-4:2000(E), June 1, 2000, Road Vehicles—Diagnostic Systems—Keyword Protocol 2000—Part 4: Requirements for Emission-related Systems.	86.1806-05

40 CFR (PART 86, 86.600-1 TO END)—Continued

ENVIRONMENTAL PROTECTION AGENCY—Continued

	40 CFR
ISO 15765-4.3, Road Vehicles-Diagnostics on Controller Area Network (CAN)—Part 4: Requirements for Emission-related Systems, December 14, 2001.	86.1806-04; 86.1806-05
National Institute of Standards and Technology (formerly the National Bureau of Standards)	
Office of Standard Reference Materials, Rm. B311 Chemistry, Gaithersburg, MD 20899	
NIST Special Publication 811: ''Guide for the Use of the International System of Units (SI)'' 1995 Edition.	86.1901
Society of Automotive Engineers	
400 Commonwealth Dr., Warrendale, PA 15096–0001; Telephone: (724) 776–4841	
SAE J1151, Methane Measurement Using Gas Chromatography, Dec. 1991.	86.1311–94(b)(2)
SAE J1850, Class B Data Communication Network Interface, July 1995.	86.1806–01
SAE J1850, Class B Data Communication Network Interface, May 2001.	86.1806–04; 86.1806–05
SAE J1877, Recommended Practice for Bar-Coded Vehicle Identification Number Label, July 1994.	86.1806–01
SAE J1892, Recommended Practice for Bar-Coded Vehicle Emission Configuration Label, October 1993.	86.1806–01
SAE Recommended Practice J1930, Electronic Systems Diagnostic Terms, Definitions, Abbreviations, and Acronyms, May 1998.	86.1808-01; 86.1808-07
SAE Recommended Practice J1930, Electrical/Electronic Systems Diagnostic Terms, Definitions, Abbreviations, and Acronyms, Equivalent to ISO/TR 15031-2; Revised April 2002.	86.1806-04; 86.1806-05
SAE J1937, November 1989, Engine Testing with Low Temperature Charge Air Cooler Systems in a Dynamometer Test Cell.	86.1330–84; 86.1330–90
SAE J1939-11, October 1999, Physical Layer–250K bits/s, Shielded Twisted Pair.	86.1806-04; 86.1806-05
SAE J1939-13, July 1999, Off-Board Diagnostic Connector	86.1806-04; 86.1806-05
SAE J1939-21, April 2001, Data-Link Layer	86.1806-04; 86.1806-05
SAE J1939-31, December 1997, Network Layer	86.1806-04; 86.1806-05
SAE J1939-71, Vehicle Application Layer—J1939-71 (through 1999), Revised August 2002.	86.1806–04; 86.1806–05
SAE J1939-73, June 2001, Application Layer—Diagnostics	86.1806-04; 86.1806-05
SAE J1939-81, July 1997, Recommended Practice for Serial Control and Communications Vehicle Network—Part 81—Network Management.	86.1806-04; 86.1806-05
SAE J1962, Diagnostic Connector, January 1995	86.1806–01
SAE J1962, Diagnostic Connector—Equivalent to ISO/DIS 15031-3, Revised April 2002.	86.1806–04; 86.1806–05
SAE J1978, OBD II Scan Tool—Equivalent to ISO/DIS 15031-4, Revised April 2002.	86.1806–04; 86.1806–05
SAE J1979, E/E Diagnostic Test Modes, July 1996	86.1806–01
SAE J1979, E/E Diagnostic Test Modes, September 1997	86.1808–01; 86.1808–07

40 CFR (PART 86, 86.600-1 TO END)—Continued

ENVIRONMENTAL PROTECTION AGENCY—Continued

	40 CFR
SAE J1979, E/E Diagnostic Test Modes—Equivalent to ISO/DIS 15031-5, Revised April 2002.	86.1806–04; 86.1806–05
SAE J2012, Diagnostic Trouble Code Definitions, July 1996	86.1806–01
SAE J2012, Diagnostic Trouble Code Definitions—Equivalent to ISO/DIS 15031-6, Revised April 2002.	86.1806–04; 86.1806–05
SAE Recommended Practice J2284-3, High-Speed CAN (HSC) for Vehicle Applications at 500 KBPS, May 2001.	86.1808-01; 86.1808-07
SAE Recommended Practice J2534, Recommended Practice for Pass-Thru Vehicle Programming, February 2002.	86.1808-01; 86.1808-07
State of California	
California Regulatory Requirements Applicable to the LEV II Program, including California Non-Methane Organic Gas Test Procedures, August 5, 1999.	86.1803–01; 86.1810–01; 86.1844–01
California Regulatory Requirements Applicable to the LEV II Program, including California Exhaust Emission Standards and Test Procedures for 2003 and Subsequent Model Zero-Emission Vehicles, and 2001 and Subsequent Model Hybrid Electric Vehicles, in the Passenger Car, Light-duty Truck and Medium-duty Vehicle Classes, August 5, 1989.	86.1806–01; 86.1811–04; 86.1844–01
California Regulatory Requirements Applicable to the National Low Emission Vehicle Program, October 1996.	86.612–97; 86.1012–97; 86.1702–99; 86.1708–99; 96.1709–99; 86.1717–99; 86.1735–99; 86.1771–99; 86.1775–99; 86.1776–99; 86.1777–99; Appendix XVI; Appendix XVII

Table of CFR Titles and Chapters

(Revised as of July 1, 2006)

Title 1—General Provisions

I Administrative Committee of the Federal Register (Parts 1—49)

II Office of the Federal Register (Parts 50—299)

IV Miscellaneous Agencies (Parts 400—500)

Title 2—Grants and Agreements

SUBTITLE A—OFFICE OF MANAGEMENT AND BUDGET GUIDANCE FOR GRANTS AND AGREEMENTS

I Office of Management and Budget Governmentwide Guidance for Grants and Agreements (Parts 100-199)

II Office of Management and Budget Circulars and Guidance (200-299)

SUBTITLE B—FEDERAL AGENCY REGULATIONS FOR GRANTS AND AGREEMENTS [RESERVED]

Title 3—The President

I Executive Office of the President (Parts 100—199)

Title 4—Accounts

I Government Accountability Office (Parts 1—99)

Title 5—Administrative Personnel

I Office of Personnel Management (Parts 1—1199)

II Merit Systems Protection Board (Parts 1200—1299)

III Office of Management and Budget (Parts 1300—1399)

V The International Organizations Employees Loyalty Board (Parts 1500—1599)

VI Federal Retirement Thrift Investment Board (Parts 1600—1699)

VIII Office of Special Counsel (Parts 1800—1899)

IX Appalachian Regional Commission (Parts 1900—1999)

XI Armed Forces Retirement Home (Part 2100)

XIV Federal Labor Relations Authority, General Counsel of the Federal Labor Relations Authority and Federal Service Impasses Panel (Parts 2400—2499)

Title 5—Administrative Personnel—Continued

Chap.	
XV	Office of Administration, Executive Office of the President (Parts 2500—2599)
XVI	Office of Government Ethics (Parts 2600—2699)
XXI	Department of the Treasury (Parts 3100—3199)
XXII	Federal Deposit Insurance Corporation (Part 3201)
XXIII	Department of Energy (Part 3301)
XXIV	Federal Energy Regulatory Commission (Part 3401)
XXV	Department of the Interior (Part 3501)
XXVI	Department of Defense (Part 3601)
XXVIII	Department of Justice (Part 3801)
XXIX	Federal Communications Commission (Parts 3900—3999)
XXX	Farm Credit System Insurance Corporation (Parts 4000—4099)
XXXI	Farm Credit Administration (Parts 4100—4199)
XXXIII	Overseas Private Investment Corporation (Part 4301)
XXXV	Office of Personnel Management (Part 4501)
XL	Interstate Commerce Commission (Part 5001)
XLI	Commodity Futures Trading Commission (Part 5101)
XLII	Department of Labor (Part 5201)
XLIII	National Science Foundation (Part 5301)
XLV	Department of Health and Human Services (Part 5501)
XLVI	Postal Rate Commission (Part 5601)
XLVII	Federal Trade Commission (Part 5701)
XLVIII	Nuclear Regulatory Commission (Part 5801)
L	Department of Transportation (Part 6001)
LII	Export-Import Bank of the United States (Part 6201)
LIII	Department of Education (Parts 6300—6399)
LIV	Environmental Protection Agency (Part 6401)
LV	National Endowment for the Arts (Part 6501)
LVI	National Endowment for the Humanities (Part 6601)
LVII	General Services Administration (Part 6701)
LVIII	Board of Governors of the Federal Reserve System (Part 6801)
LIX	National Aeronautics and Space Administration (Part 6901)
LX	United States Postal Service (Part 7001)
LXI	National Labor Relations Board (Part 7101)
LXII	Equal Employment Opportunity Commission (Part 7201)
LXIII	Inter-American Foundation (Part 7301)
LXV	Department of Housing and Urban Development (Part 7501)
LXVI	National Archives and Records Administration (Part 7601)
LXVII	Institute of Museum and Library Services (Part 7701)
LXIX	Tennessee Valley Authority (Part 7901)
LXXI	Consumer Product Safety Commission (Part 8101)
LXXIII	Department of Agriculture (Part 8301)
LXXIV	Federal Mine Safety and Health Review Commission (Part 8401)
LXXVI	Federal Retirement Thrift Investment Board (Part 8601)

Title 5—Administrative Personnel—Continued

Chap.

LXXVII Office of Management and Budget (Part 8701)

XCVII Department of Homeland Security Human Resources Management System (Department of Homeland Security--Office of Personnel Management) (Part 9701)

XCIX Department of Defense Human Resources Management and Labor Relations Systems (Department of Defense--Office of Personnel Management) (Part 9901)

Title 6—Homeland Security

I Department of Homeland Security, Office of the Secretary (Parts 0—99)

Title 7—Agriculture

SUBTITLE A—OFFICE OF THE SECRETARY OF AGRICULTURE (PARTS 0—26)

SUBTITLE B—REGULATIONS OF THE DEPARTMENT OF AGRICULTURE

I Agricultural Marketing Service (Standards, Inspections, Marketing Practices), Department of Agriculture (Parts 27—209)

II Food and Nutrition Service, Department of Agriculture (Parts 210—299)

III Animal and Plant Health Inspection Service, Department of Agriculture (Parts 300—399)

IV Federal Crop Insurance Corporation, Department of Agriculture (Parts 400—499)

V Agricultural Research Service, Department of Agriculture (Parts 500—599)

VI Natural Resources Conservation Service, Department of Agriculture (Parts 600—699)

VII Farm Service Agency, Department of Agriculture (Parts 700—799)

VIII Grain Inspection, Packers and Stockyards Administration (Federal Grain Inspection Service), Department of Agriculture (Parts 800—899)

IX Agricultural Marketing Service (Marketing Agreements and Orders; Fruits, Vegetables, Nuts), Department of Agriculture (Parts 900—999)

X Agricultural Marketing Service (Marketing Agreements and Orders; Milk), Department of Agriculture (Parts 1000—1199)

XI Agricultural Marketing Service (Marketing Agreements and Orders; Miscellaneous Commodities), Department of Agriculture (Parts 1200—1299)

XIV Commodity Credit Corporation, Department of Agriculture (Parts 1400—1499)

XV Foreign Agricultural Service, Department of Agriculture (Parts 1500—1599)

XVI Rural Telephone Bank, Department of Agriculture (Parts 1600—1699)

XVII Rural Utilities Service, Department of Agriculture (Parts 1700—1799)

Title 7—Agriculture—Continued

Chap.	
XVIII	Rural Housing Service, Rural Business-Cooperative Service, Rural Utilities Service, and Farm Service Agency, Department of Agriculture (Parts 1800—2099)
XX	Local Television Loan Guarantee Board (Parts 2200—2299)
XXVI	Office of Inspector General, Department of Agriculture (Parts 2600—2699)
XXVII	Office of Information Resources Management, Department of Agriculture (Parts 2700—2799)
XXVIII	Office of Operations, Department of Agriculture (Parts 2800—2899)
XXIX	Office of Energy Policy and New Uses, Department of Agriculture (Parts 2900—2999)
XXX	Office of the Chief Financial Officer, Department of Agriculture (Parts 3000—3099)
XXXI	Office of Environmental Quality, Department of Agriculture (Parts 3100—3199)
XXXII	Office of Procurement and Property Management, Department of Agriculture (Parts 3200—3299)
XXXIII	Office of Transportation, Department of Agriculture (Parts 3300—3399)
XXXIV	Cooperative State Research, Education, and Extension Service, Department of Agriculture (Parts 3400—3499)
XXXV	Rural Housing Service, Department of Agriculture (Parts 3500—3599)
XXXVI	National Agricultural Statistics Service, Department of Agriculture (Parts 3600—3699)
XXXVII	Economic Research Service, Department of Agriculture (Parts 3700—3799)
XXXVIII	World Agricultural Outlook Board, Department of Agriculture (Parts 3800—3899)
XLI	[Reserved]
XLII	Rural Business-Cooperative Service and Rural Utilities Service, Department of Agriculture (Parts 4200—4299)

Title 8—Aliens and Nationality

I	Department of Homeland Security (Immigration and Naturalization) (Parts 1—499)
V	Executive Office for Immigration Review, Department of Justice (Parts 1000—1399)

Title 9—Animals and Animal Products

I	Animal and Plant Health Inspection Service, Department of Agriculture (Parts 1—199)
II	Grain Inspection, Packers and Stockyards Administration (Packers and Stockyards Programs), Department of Agriculture (Parts 200—299)
III	Food Safety and Inspection Service, Department of Agriculture (Parts 300—599)

Title 10—Energy

Chap.

I Nuclear Regulatory Commission (Parts 0—199)

II Department of Energy (Parts 200—699)

III Department of Energy (Parts 700—999)

X Department of Energy (General Provisions) (Parts 1000—1099)

XIII Nuclear Waste Technical Review Board (Parts 1303—1399)

XVII Defense Nuclear Facilities Safety Board (Parts 1700—1799)

XVIII Northeast Interstate Low-Level Radioactive Waste Commission (Part 1800)

Title 11—Federal Elections

I Federal Election Commission (Parts 1—9099)

Title 12—Banks and Banking

I Comptroller of the Currency, Department of the Treasury (Parts 1—199)

II Federal Reserve System (Parts 200—299)

III Federal Deposit Insurance Corporation (Parts 300—399)

IV Export-Import Bank of the United States (Parts 400—499)

V Office of Thrift Supervision, Department of the Treasury (Parts 500—599)

VI Farm Credit Administration (Parts 600—699)

VII National Credit Union Administration (Parts 700—799)

VIII Federal Financing Bank (Parts 800—899)

IX Federal Housing Finance Board (Parts 900—999)

XI Federal Financial Institutions Examination Council (Parts 1100—1199)

XIV Farm Credit System Insurance Corporation (Parts 1400—1499)

XV Department of the Treasury (Parts 1500—1599)

XVII Office of Federal Housing Enterprise Oversight, Department of Housing and Urban Development (Parts 1700—1799)

XVIII Community Development Financial Institutions Fund, Department of the Treasury (Parts 1800—1899)

Title 13—Business Credit and Assistance

I Small Business Administration (Parts 1—199)

III Economic Development Administration, Department of Commerce (Parts 300—399)

IV Emergency Steel Guarantee Loan Board, Department of Commerce (Parts 400—499)

V Emergency Oil and Gas Guaranteed Loan Board, Department of Commerce (Parts 500—599)

Title 14—Aeronautics and Space

Chap.

I Federal Aviation Administration, Department of Transportation (Parts 1—199)

II Office of the Secretary, Department of Transportation (Aviation Proceedings) (Parts 200—399)

III Commercial Space Transportation, Federal Aviation Administration, Department of Transportation (Parts 400—499)

V National Aeronautics and Space Administration (Parts 1200—1299)

VI Air Transportation System Stabilization (Parts 1300—1399)

Title 15—Commerce and Foreign Trade

SUBTITLE A—OFFICE OF THE SECRETARY OF COMMERCE (PARTS 0—29)

SUBTITLE B—REGULATIONS RELATING TO COMMERCE AND FOREIGN TRADE

I Bureau of the Census, Department of Commerce (Parts 30—199)

II National Institute of Standards and Technology, Department of Commerce (Parts 200—299)

III International Trade Administration, Department of Commerce (Parts 300—399)

IV Foreign-Trade Zones Board, Department of Commerce (Parts 400—499)

VII Bureau of Industry and Security, Department of Commerce (Parts 700—799)

VIII Bureau of Economic Analysis, Department of Commerce (Parts 800—899)

IX National Oceanic and Atmospheric Administration, Department of Commerce (Parts 900—999)

XI Technology Administration, Department of Commerce (Parts 1100—1199)

XIII East-West Foreign Trade Board (Parts 1300—1399)

XIV Minority Business Development Agency (Parts 1400—1499)

SUBTITLE C—REGULATIONS RELATING TO FOREIGN TRADE AGREEMENTS

XX Office of the United States Trade Representative (Parts 2000—2099)

SUBTITLE D—REGULATIONS RELATING TO TELECOMMUNICATIONS AND INFORMATION

XXIII National Telecommunications and Information Administration, Department of Commerce (Parts 2300—2399)

Title 16—Commercial Practices

I Federal Trade Commission (Parts 0—999)

II Consumer Product Safety Commission (Parts 1000—1799)

Title 17—Commodity and Securities Exchanges

Chap.

I Commodity Futures Trading Commission (Parts 1—199)

II Securities and Exchange Commission (Parts 200—399)

IV Department of the Treasury (Parts 400—499)

Title 18—Conservation of Power and Water Resources

I Federal Energy Regulatory Commission, Department of Energy (Parts 1—399)

III Delaware River Basin Commission (Parts 400—499)

VI Water Resources Council (Parts 700—799)

VIII Susquehanna River Basin Commission (Parts 800—899)

XIII Tennessee Valley Authority (Parts 1300—1399)

Title 19—Customs Duties

I Bureau of Customs and Border Protection, Department of Homeland Security; Department of the Treasury (Parts 0—199)

II United States International Trade Commission (Parts 200—299)

III International Trade Administration, Department of Commerce (Parts 300—399)

IV Bureau of Immigration and Customs Enforcement, Department of Homeland Security (Parts 400—599)

Title 20—Employees' Benefits

I Office of Workers' Compensation Programs, Department of Labor (Parts 1—199)

II Railroad Retirement Board (Parts 200—399)

III Social Security Administration (Parts 400—499)

IV Employees Compensation Appeals Board, Department of Labor (Parts 500—599)

V Employment and Training Administration, Department of Labor (Parts 600—699)

VI Employment Standards Administration, Department of Labor (Parts 700—799)

VII Benefits Review Board, Department of Labor (Parts 800—899)

VIII Joint Board for the Enrollment of Actuaries (Parts 900—999)

IX Office of the Assistant Secretary for Veterans' Employment and Training, Department of Labor (Parts 1000—1099)

Title 21—Food and Drugs

I Food and Drug Administration, Department of Health and Human Services (Parts 1—1299)

II Drug Enforcement Administration, Department of Justice (Parts 1300—1399)

III Office of National Drug Control Policy (Parts 1400—1499)

Title 22—Foreign Relations

Chap.

I Department of State (Parts 1—199)

II Agency for International Development (Parts 200—299)

III Peace Corps (Parts 300—399)

IV International Joint Commission, United States and Canada (Parts 400—499)

V Broadcasting Board of Governors (Parts 500—599)

VII Overseas Private Investment Corporation (Parts 700—799)

IX Foreign Service Grievance Board Regulations (Parts 900—999)

X Inter-American Foundation (Parts 1000—1099)

XI International Boundary and Water Commission, United States and Mexico, United States Section (Parts 1100—1199)

XII United States International Development Cooperation Agency (Parts 1200—1299)

XIV Foreign Service Labor Relations Board; Federal Labor Relations Authority; General Counsel of the Federal Labor Relations Authority; and the Foreign Service Impasse Disputes Panel (Parts 1400—1499)

XV African Development Foundation (Parts 1500—1599)

XVI Japan-United States Friendship Commission (Parts 1600—1699)

XVII United States Institute of Peace (Parts 1700—1799)

Title 23—Highways

I Federal Highway Administration, Department of Transportation (Parts 1—999)

II National Highway Traffic Safety Administration and Federal Highway Administration, Department of Transportation (Parts 1200—1299)

III National Highway Traffic Safety Administration, Department of Transportation (Parts 1300—1399)

Title 24—Housing and Urban Development

SUBTITLE A—OFFICE OF THE SECRETARY, DEPARTMENT OF HOUSING AND URBAN DEVELOPMENT (PARTS 0—99)

SUBTITLE B—REGULATIONS RELATING TO HOUSING AND URBAN DEVELOPMENT

I Office of Assistant Secretary for Equal Opportunity, Department of Housing and Urban Development (Parts 100—199)

II Office of Assistant Secretary for Housing-Federal Housing Commissioner, Department of Housing and Urban Development (Parts 200—299)

III Government National Mortgage Association, Department of Housing and Urban Development (Parts 300—399)

IV Office of Housing and Office of Multifamily Housing Assistance Restructuring, Department of Housing and Urban Development (Parts 400—499)

V Office of Assistant Secretary for Community Planning and Development, Department of Housing and Urban Development (Parts 500—599)

Title 24—Housing and Urban Development—Continued

Chap.

VI Office of Assistant Secretary for Community Planning and Development, Department of Housing and Urban Development (Parts 600—699) [Reserved]

VII Office of the Secretary, Department of Housing and Urban Development (Housing Assistance Programs and Public and Indian Housing Programs) (Parts 700—799)

VIII Office of the Assistant Secretary for Housing—Federal Housing Commissioner, Department of Housing and Urban Development (Section 8 Housing Assistance Programs, Section 202 Direct Loan Program, Section 202 Supportive Housing for the Elderly Program and Section 811 Supportive Housing for Persons With Disabilities Program) (Parts 800—899)

IX Office of Assistant Secretary for Public and Indian Housing, Department of Housing and Urban Development (Parts 900—1699)

X Office of Assistant Secretary for Housing—Federal Housing Commissioner, Department of Housing and Urban Development (Interstate Land Sales Registration Program) (Parts 1700—1799)

XII Office of Inspector General, Department of Housing and Urban Development (Parts 2000—2099)

XX Office of Assistant Secretary for Housing—Federal Housing Commissioner, Department of Housing and Urban Development (Parts 3200—3899)

XXV Neighborhood Reinvestment Corporation (Parts 4100—4199)

Title 25—Indians

I Bureau of Indian Affairs, Department of the Interior (Parts 1—299)

II Indian Arts and Crafts Board, Department of the Interior (Parts 300—399)

III National Indian Gaming Commission, Department of the Interior (Parts 500—599)

IV Office of Navajo and Hopi Indian Relocation (Parts 700—799)

V Bureau of Indian Affairs, Department of the Interior, and Indian Health Service, Department of Health and Human Services (Part 900)

VI Office of the Assistant Secretary-Indian Affairs, Department of the Interior (Parts 1000—1199)

VII Office of the Special Trustee for American Indians, Department of the Interior (Part 1200)

Title 26—Internal Revenue

I Internal Revenue Service, Department of the Treasury (Parts 1—899)

Title 27—Alcohol, Tobacco Products and Firearms

I Alcohol and Tobacco Tax and Trade Bureau, Department of the Treasury (Parts 1—399)

Title 27—Alcohol, Tobacco Products and Firearms—Continued

Chap.

II Bureau of Alcohol, Tobacco, Firearms, and Explosives, Department of Justice (Parts 400—699)

Title 28—Judicial Administration

I Department of Justice (Parts 0—299)

III Federal Prison Industries, Inc., Department of Justice (Parts 300—399)

V Bureau of Prisons, Department of Justice (Parts 500—599)

VI Offices of Independent Counsel, Department of Justice (Parts 600—699)

VII Office of Independent Counsel (Parts 700—799)

VIII Court Services and Offender Supervision Agency for the District of Columbia (Parts 800—899)

IX National Crime Prevention and Privacy Compact Council (Parts 900—999)

XI Department of Justice and Department of State (Parts 1100—1199)

Title 29—Labor

SUBTITLE A—OFFICE OF THE SECRETARY OF LABOR (PARTS 0—99)

SUBTITLE B—REGULATIONS RELATING TO LABOR

I National Labor Relations Board (Parts 100—199)

II Office of Labor-Management Standards, Department of Labor (Parts 200—299)

III National Railroad Adjustment Board (Parts 300—399)

IV Office of Labor-Management Standards, Department of Labor (Parts 400—499)

V Wage and Hour Division, Department of Labor (Parts 500—899)

IX Construction Industry Collective Bargaining Commission (Parts 900—999)

X National Mediation Board (Parts 1200—1299)

XII Federal Mediation and Conciliation Service (Parts 1400—1499)

XIV Equal Employment Opportunity Commission (Parts 1600—1699)

XVII Occupational Safety and Health Administration, Department of Labor (Parts 1900—1999)

XX Occupational Safety and Health Review Commission (Parts 2200—2499)

XXV Employee Benefits Security Administration, Department of Labor (Parts 2500—2599)

XXVII Federal Mine Safety and Health Review Commission (Parts 2700—2799)

XL Pension Benefit Guaranty Corporation (Parts 4000—4999)

Title 30—Mineral Resources

Chap.

I Mine Safety and Health Administration, Department of Labor (Parts 1—199)

II Minerals Management Service, Department of the Interior (Parts 200—299)

III Board of Surface Mining and Reclamation Appeals, Department of the Interior (Parts 300—399)

IV Geological Survey, Department of the Interior (Parts 400—499)

VII Office of Surface Mining Reclamation and Enforcement, Department of the Interior (Parts 700—999)

Title 31—Money and Finance: Treasury

SUBTITLE A—OFFICE OF THE SECRETARY OF THE TREASURY (PARTS 0—50)

SUBTITLE B—REGULATIONS RELATING TO MONEY AND FINANCE

I Monetary Offices, Department of the Treasury (Parts 51—199)

II Fiscal Service, Department of the Treasury (Parts 200—399)

IV Secret Service, Department of the Treasury (Parts 400—499)

V Office of Foreign Assets Control, Department of the Treasury (Parts 500—599)

VI Bureau of Engraving and Printing, Department of the Treasury (Parts 600—699)

VII Federal Law Enforcement Training Center, Department of the Treasury (Parts 700—799)

VIII Office of International Investment, Department of the Treasury (Parts 800—899)

IX Federal Claims Collection Standards (Department of the Treasury—Department of Justice) (Parts 900—999)

Title 32—National Defense

SUBTITLE A—DEPARTMENT OF DEFENSE

I Office of the Secretary of Defense (Parts 1—399)

V Department of the Army (Parts 400—699)

VI Department of the Navy (Parts 700—799)

VII Department of the Air Force (Parts 800—1099)

SUBTITLE B—OTHER REGULATIONS RELATING TO NATIONAL DEFENSE

XII Defense Logistics Agency (Parts 1200—1299)

XVI Selective Service System (Parts 1600—1699)

XVIII National Counterintelligence Center (Parts 1800—1899)

XIX Central Intelligence Agency (Parts 1900—1999)

XX Information Security Oversight Office, National Archives and Records Administration (Parts 2000—2099)

XXI National Security Council (Parts 2100—2199)

XXIV Office of Science and Technology Policy (Parts 2400—2499)

XXVII Office for Micronesian Status Negotiations (Parts 2700—2799)

Title 32—National Defense—Continued

Chap.

XXVIII Office of the Vice President of the United States (Parts 2800—2899)

Title 33—Navigation and Navigable Waters

I Coast Guard, Department of Homeland Security (Parts 1—199)

II Corps of Engineers, Department of the Army (Parts 200—399)

IV Saint Lawrence Seaway Development Corporation, Department of Transportation (Parts 400—499)

Title 34—Education

SUBTITLE A—OFFICE OF THE SECRETARY, DEPARTMENT OF EDUCATION (PARTS 1—99)

SUBTITLE B—REGULATIONS OF THE OFFICES OF THE DEPARTMENT OF EDUCATION

I Office for Civil Rights, Department of Education (Parts 100—199)

II Office of Elementary and Secondary Education, Department of Education (Parts 200—299)

III Office of Special Education and Rehabilitative Services, Department of Education (Parts 300—399)

IV Office of Vocational and Adult Education, Department of Education (Parts 400—499)

V Office of Bilingual Education and Minority Languages Affairs, Department of Education (Parts 500—599)

VI Office of Postsecondary Education, Department of Education (Parts 600—699)

XI National Institute for Literacy (Parts 1100—1199)

SUBTITLE C—REGULATIONS RELATING TO EDUCATION

XII National Council on Disability (Parts 1200—1299)

Title 35—[RESERVED]

Title 36—Parks, Forests, and Public Property

I National Park Service, Department of the Interior (Parts 1—199)

II Forest Service, Department of Agriculture (Parts 200—299)

III Corps of Engineers, Department of the Army (Parts 300—399)

IV American Battle Monuments Commission (Parts 400—499)

V Smithsonian Institution (Parts 500—599)

VII Library of Congress (Parts 700—799)

VIII Advisory Council on Historic Preservation (Parts 800—899)

IX Pennsylvania Avenue Development Corporation (Parts 900—999)

X Presidio Trust (Parts 1000—1099)

XI Architectural and Transportation Barriers Compliance Board (Parts 1100—1199)

XII National Archives and Records Administration (Parts 1200—1299)

XV Oklahoma City National Memorial Trust (Part 1501)

Title 36—Parks, Forests, and Public Property—Continued

Chap.

XVI Morris K. Udall Scholarship and Excellence in National Environmental Policy Foundation (Parts 1600—1699)

Title 37—Patents, Trademarks, and Copyrights

I United States Patent and Trademark Office, Department of Commerce (Parts 1—199)

II Copyright Office, Library of Congress (Parts 200—299)

III Copyright Royalty Board, Library of Congress (Parts 301—399)

IV Assistant Secretary for Technology Policy, Department of Commerce (Parts 400—499)

V Under Secretary for Technology, Department of Commerce (Parts 500—599)

Title 38—Pensions, Bonuses, and Veterans' Relief

I Department of Veterans Affairs (Parts 0—99)

Title 39—Postal Service

I United States Postal Service (Parts 1—999)

III Postal Rate Commission (Parts 3000—3099)

Title 40—Protection of Environment

I Environmental Protection Agency (Parts 1—1099)

IV Environmental Protection Agency and Department of Justice (Parts 1400—1499)

V Council on Environmental Quality (Parts 1500—1599)

VI Chemical Safety and Hazard Investigation Board (Parts 1600—1699)

VII Environmental Protection Agency and Department of Defense; Uniform National Discharge Standards for Vessels of the Armed Forces (Parts 1700—1799)

Title 41—Public Contracts and Property Management

SUBTITLE B—OTHER PROVISIONS RELATING TO PUBLIC CONTRACTS

50 Public Contracts, Department of Labor (Parts 50–1—50–999)

51 Committee for Purchase From People Who Are Blind or Severely Disabled (Parts 51–1—51–99)

60 Office of Federal Contract Compliance Programs, Equal Employment Opportunity, Department of Labor (Parts 60–1—60–999)

61 Office of the Assistant Secretary for Veterans' Employment and Training Service, Department of Labor (Parts 61–1—61–999)

SUBTITLE C—FEDERAL PROPERTY MANAGEMENT REGULATIONS SYSTEM

101 Federal Property Management Regulations (Parts 101–1—101–99)

102 Federal Management Regulation (Parts 102–1—102–299)

Title 41—Public Contracts and Property Management—Continued

Chap.

105 General Services Administration (Parts 105–1—105–999)

109 Department of Energy Property Management Regulations (Parts 109–1—109–99)

114 Department of the Interior (Parts 114–1—114–99)

115 Environmental Protection Agency (Parts 115–1—115–99)

128 Department of Justice (Parts 128–1—128–99)

SUBTITLE D—OTHER PROVISIONS RELATING TO PROPERTY MANAGEMENT [RESERVED]

SUBTITLE E—FEDERAL INFORMATION RESOURCES MANAGEMENT REGULATIONS SYSTEM

201 Federal Information Resources Management Regulation (Parts 201–1—201–99) [Reserved]

SUBTITLE F—FEDERAL TRAVEL REGULATION SYSTEM

300 General (Parts 300–1—300–99)

301 Temporary Duty (TDY) Travel Allowances (Parts 301–1—301–99)

302 Relocation Allowances (Parts 302–1—302–99)

303 Payment of Expenses Connected with the Death of Certain Employees (Part 303–1—303–99)

304 Payment of Travel Expenses from a Non-Federal Source (Parts 304–1—304–99)

Title 42—Public Health

I Public Health Service, Department of Health and Human Services (Parts 1—199)

IV Centers for Medicare & Medicaid Services, Department of Health and Human Services (Parts 400—499)

V Office of Inspector General-Health Care, Department of Health and Human Services (Parts 1000—1999)

Title 43—Public Lands: Interior

SUBTITLE A—OFFICE OF THE SECRETARY OF THE INTERIOR (PARTS 1—199)

SUBTITLE B—REGULATIONS RELATING TO PUBLIC LANDS

I Bureau of Reclamation, Department of the Interior (Parts 200—499)

II Bureau of Land Management, Department of the Interior (Parts 1000—9999)

III Utah Reclamation Mitigation and Conservation Commission (Parts 10000—10010)

Title 44—Emergency Management and Assistance

I Federal Emergency Management Agency, Department of Homeland Security (Parts 0—399)

IV Department of Commerce and Department of Transportation (Parts 400—499)

Title 45—Public Welfare

Chap.

SUBTITLE A—DEPARTMENT OF HEALTH AND HUMAN SERVICES (PARTS 1—199)

SUBTITLE B—REGULATIONS RELATING TO PUBLIC WELFARE

II Office of Family Assistance (Assistance Programs), Administration for Children and Families, Department of Health and Human Services (Parts 200—299)

III Office of Child Support Enforcement (Child Support Enforcement Program), Administration for Children and Families, Department of Health and Human Services (Parts 300—399)

IV Office of Refugee Resettlement, Administration for Children and Families, Department of Health and Human Services (Parts 400—499)

V Foreign Claims Settlement Commission of the United States, Department of Justice (Parts 500—599)

VI National Science Foundation (Parts 600—699)

VII Commission on Civil Rights (Parts 700—799)

VIII Office of Personnel Management (Parts 800—899)

X Office of Community Services, Administration for Children and Families, Department of Health and Human Services (Parts 1000—1099)

XI National Foundation on the Arts and the Humanities (Parts 1100—1199)

XII Corporation for National and Community Service (Parts 1200—1299)

XIII Office of Human Development Services, Department of Health and Human Services (Parts 1300—1399)

XVI Legal Services Corporation (Parts 1600—1699)

XVII National Commission on Libraries and Information Science (Parts 1700—1799)

XVIII Harry S. Truman Scholarship Foundation (Parts 1800—1899)

XXI Commission on Fine Arts (Parts 2100—2199)

XXIII Arctic Research Commission (Part 2301)

XXIV James Madison Memorial Fellowship Foundation (Parts 2400—2499)

XXV Corporation for National and Community Service (Parts 2500—2599)

Title 46—Shipping

I Coast Guard, Department of Homeland Security (Parts 1—199)

II Maritime Administration, Department of Transportation (Parts 200—399)

III Coast Guard (Great Lakes Pilotage), Department of Homeland Security (Parts 400—499)

IV Federal Maritime Commission (Parts 500—599)

Title 47—Telecommunication

I Federal Communications Commission (Parts 0—199)

Title 47—Telecommunication—Continued

Chap.

II Office of Science and Technology Policy and National Security Council (Parts 200—299)

III National Telecommunications and Information Administration, Department of Commerce (Parts 300—399)

Title 48—Federal Acquisition Regulations System

1 Federal Acquisition Regulation (Parts 1—99)

2 Defense Acquisition Regulations System, Department of Defense (Parts 200—299)

3 Department of Health and Human Services (Parts 300—399)

4 Department of Agriculture (Parts 400—499)

5 General Services Administration (Parts 500—599)

6 Department of State (Parts 600—699)

7 United States Agency for International Development (Parts 700—799)

8 Department of Veterans Affairs (Parts 800—899)

9 Department of Energy (Parts 900—999)

10 Department of the Treasury (Parts 1000—1099)

12 Department of Transportation (Parts 1200—1299)

13 Department of Commerce (Parts 1300—1399)

14 Department of the Interior (Parts 1400—1499)

15 Environmental Protection Agency (Parts 1500—1599)

16 Office of Personnel Management, Federal Employees Health Benefits Acquisition Regulation (Parts 1600—1699)

17 Office of Personnel Management (Parts 1700—1799)

18 National Aeronautics and Space Administration (Parts 1800—1899)

19 Broadcasting Board of Governors (Parts 1900—1999)

20 Nuclear Regulatory Commission (Parts 2000—2099)

21 Office of Personnel Management, Federal Employees' Group Life Insurance Federal Acquisition Regulation (Parts 2100—2199)

23 Social Security Administration (Parts 2300—2399)

24 Department of Housing and Urban Development (Parts 2400—2499)

25 National Science Foundation (Parts 2500—2599)

28 Department of Justice (Parts 2800—2899)

29 Department of Labor (Parts 2900—2999)

30 Department of Homeland Security, Homeland Security Acquisition Regulation (HSAR) (Parts 3000—3099)

34 Department of Education Acquisition Regulation (Parts 3400—3499)

35 [Reserved]

44 Federal Emergency Management Agency (Parts 4400—4499)

51 Department of the Army Acquisition Regulations (Parts 5100—5199)

Chap.

52 Department of the Navy Acquisition Regulations (Parts 5200—5299)

53 Department of the Air Force Federal Acquisition Regulation Supplement (Parts 5300—5399)

54 Defense Logistics Agency, Department of Defense (Parts 5400—5499)

57 African Development Foundation (Parts 5700—5799)

61 General Services Administration Board of Contract Appeals (Parts 6100—6199)

63 Department of Transportation Board of Contract Appeals (Parts 6300—6399)

99 Cost Accounting Standards Board, Office of Federal Procurement Policy, Office of Management and Budget (Parts 9900—9999)

Title 49—Transportation

SUBTITLE A—OFFICE OF THE SECRETARY OF TRANSPORTATION (PARTS 1—99)

SUBTITLE B—OTHER REGULATIONS RELATING TO TRANSPORTATION

I Pipeline and Hazardous Materials Safety Administration, Department of Transportation (Parts 100—199)

II Federal Railroad Administration, Department of Transportation (Parts 200—299)

III Federal Motor Carrier Safety Administration, Department of Transportation (Parts 300—399)

IV Coast Guard, Department of Homeland Security (Parts 400—499)

V National Highway Traffic Safety Administration, Department of Transportation (Parts 500—599)

VI Federal Transit Administration, Department of Transportation (Parts 600—699)

VII National Railroad Passenger Corporation (AMTRAK) (Parts 700—799)

VIII National Transportation Safety Board (Parts 800—999)

X Surface Transportation Board, Department of Transportation (Parts 1000—1399)

XI Research and Innovative Technology Administration, Department of Transportation (Parts 1400—1499)

XII Transportation Security Administration, Department of Homeland Security (Parts 1500—1699)

Title 50—Wildlife and Fisheries

I United States Fish and Wildlife Service, Department of the Interior (Parts 1—199)

II National Marine Fisheries Service, National Oceanic and Atmospheric Administration, Department of Commerce (Parts 200—299)

III International Fishing and Related Activities (Parts 300—399)

Title 50—Wildlife and Fisheries—Continued

Chap.

IV Joint Regulations (United States Fish and Wildlife Service, Department of the Interior and National Marine Fisheries Service, National Oceanic and Atmospheric Administration, Department of Commerce); Endangered Species Committee Regulations (Parts 400—499)

V Marine Mammal Commission (Parts 500—599)

VI Fishery Conservation and Management, National Oceanic and Atmospheric Administration, Department of Commerce (Parts 600—699)

CFR Index and Finding Aids

Subject/Agency Index

List of Agency Prepared Indexes

Parallel Tables of Statutory Authorities and Rules

List of CFR Titles, Chapters, Subchapters, and Parts

Alphabetical List of Agencies Appearing in the CFR

Alphabetical List of Agencies Appearing in the CFR

(Revised as of July 1, 2006)

Agency	CFR Title, Subtitle or Chapter
Administrative Committee of the Federal Register	1, I
Advanced Research Projects Agency	32, I
Advisory Council on Historic Preservation	36, VIII
African Development Foundation	22, XV
Federal Acquisition Regulation	48, 57
Agency for International Development, United States	22, II
Federal Acquisition Regulation	48, 7
Agricultural Marketing Service	7, I, IX, X, XI
Agricultural Research Service	7, V
Agriculture Department	5, LXXIII
Agricultural Marketing Service	7, I, IX, X, XI
Agricultural Research Service	7, V
Animal and Plant Health Inspection Service	7, III; 9, I
Chief Financial Officer, Office of	7, XXX
Commodity Credit Corporation	7, XIV
Cooperative State Research, Education, and Extension Service	7, XXXIV
Economic Research Service	7, XXXVII
Energy, Office of	7, XXIX
Environmental Quality, Office of	7, XXXI
Farm Service Agency	7, VII, XVIII
Federal Acquisition Regulation	48, 4
Federal Crop Insurance Corporation	7, IV
Food and Nutrition Service	7, II
Food Safety and Inspection Service	9, III
Foreign Agricultural Service	7, XV
Forest Service	36, II
Grain Inspection, Packers and Stockyards Administration	7, VIII; 9, II
Information Resources Management, Office of	7, XXVII
Inspector General, Office of	7, XXVI
National Agricultural Library	7, XLI
National Agricultural Statistics Service	7, XXXVI
Natural Resources Conservation Service	7, VI
Operations, Office of	7, XXVIII
Procurement and Property Management, Office of	7, XXXII
Rural Business-Cooperative Service	7, XVIII, XLII
Rural Development Administration	7, XLII
Rural Housing Service	7, XVIII, XXXV
Rural Telephone Bank	7, XVI
Rural Utilities Service	7, XVII, XVIII, XLII
Secretary of Agriculture, Office of	7, Subtitle A
Transportation, Office of	7, XXXIII
World Agricultural Outlook Board	7, XXXVIII
Air Force Department	32, VII
Federal Acquisition Regulation Supplement	48, 53
Air Transportation Stabilization Board	14, VI
Alcohol and Tobacco Tax and Trade Bureau	27, I
Alcohol, Tobacco, Firearms, and Explosives, Bureau of	27, II
AMTRAK	49, VII
American Battle Monuments Commission	36, IV
American Indians, Office of the Special Trustee	25, VII
Animal and Plant Health Inspection Service	7, III; 9, I
Appalachian Regional Commission	5, IX

Agency	CFR Title, Subtitle or Chapter
Architectural and Transportation Barriers Compliance Board	36, XI
Arctic Research Commission	45, XXIII
Armed Forces Retirement Home	5, XI
Army Department	32, V
Engineers, Corps of	33, II; 36, III
Federal Acquisition Regulation	48, 51
Benefits Review Board	20, VII
Bilingual Education and Minority Languages Affairs, Office of	34, V
Blind or Severely Disabled, Committee for Purchase From People Who Are	41, 51
Broadcasting Board of Governors	22, V
Federal Acquisition Regulation	48, 19
Census Bureau	15, I
Centers for Medicare & Medicaid Services	42, IV
Central Intelligence Agency	32, XIX
Chief Financial Officer, Office of	7, XXX
Child Support Enforcement, Office of	45, III
Children and Families, Administration for	45, II, III, IV, X
Civil Rights, Commission on	45, VII
Civil Rights, Office for	34, I
Coast Guard	33, I; 46, I; 49, IV
Coast Guard (Great Lakes Pilotage)	46, III
Commerce Department	44, IV
Census Bureau	15, I
Economic Affairs, Under Secretary	37, V
Economic Analysis, Bureau of	15, VIII
Economic Development Administration	13, III
Emergency Management and Assistance	44, IV
Federal Acquisition Regulation	48, 13
Fishery Conservation and Management	50, VI
Foreign-Trade Zones Board	15, IV
Industry and Security, Bureau of	15, VII
International Trade Administration	15, III; 19, III
National Institute of Standards and Technology	15, II
National Marine Fisheries Service	50, II, IV, VI
National Oceanic and Atmospheric Administration	15, IX; 50, II, III, IV, VI
National Telecommunications and Information Administration	15, XXIII; 47, III
National Weather Service	15, IX
Patent and Trademark Office, United States	37, I
Productivity, Technology and Innovation, Assistant Secretary for	37, IV
Secretary of Commerce, Office of	15, Subtitle A
Technology, Under Secretary for	37, V
Technology Administration	15, XI
Technology Policy, Assistant Secretary for	37, IV
Commercial Space Transportation	14, III
Commodity Credit Corporation	7, XIV
Commodity Futures Trading Commission	5, XLI; 17, I
Community Planning and Development, Office of Assistant Secretary for	24, V, VI
Community Services, Office of	45, X
Comptroller of the Currency	12, I
Construction Industry Collective Bargaining Commission	29, IX
Consumer Product Safety Commission	5, LXXI; 16, II
Cooperative State Research, Education, and Extension Service	7, XXXIV
Copyright Office	37, II
Copyright Royalty Board	37, III
Corporation for National and Community Service	45, XII, XXV
Cost Accounting Standards Board	48, 99
Council on Environmental Quality	40, V
Court Services and Offender Supervision Agency for the District of Columbia	28, VIII
Customs and Border Protection Bureau	19, I
Defense Contract Audit Agency	32, I
Defense Department	5, XXVI; 32, Subtitle A; 40, VII

Agency	CFR Title, Subtitle or Chapter
Advanced Research Projects Agency	32, I
Air Force Department	32, VII
Army Department	32, V; 33, II; 36, III, 48, 51
Defense Acquisition Regulations System	48, II
Defense Intelligence Agency	32, I
Defense Logistics Agency	32, I, XII; 48, 54
Engineers, Corps of	33, II; 36, III
National Imagery and Mapping Agency	32, I
Navy Department	32, VI; 48, 52
Secretary of Defense, Office of	32, I
Defense Contract Audit Agency	32, I
Defense Intelligence Agency	32, I
Defense Logistics Agency	32, XII; 48, 54
Defense Nuclear Facilities Safety Board	10, XVII
Delaware River Basin Commission	18, III
District of Columbia, Court Services and Offender Supervision Agency for the	28, VIII
Drug Enforcement Administration	21, II
East-West Foreign Trade Board	15, XIII
Economic Affairs, Under Secretary	37, V
Economic Analysis, Bureau of	15, VIII
Economic Development Administration	13, III
Economic Research Service	7, XXXVII
Education, Department of	5, LIII
Bilingual Education and Minority Languages Affairs, Office of	34, V
Civil Rights, Office for	34, I
Educational Research and Improvement, Office of	34, VII
Elementary and Secondary Education, Office of	34, II
Federal Acquisition Regulation	48, 34
Postsecondary Education, Office of	34, VI
Secretary of Education, Office of	34, Subtitle A
Special Education and Rehabilitative Services, Office of	34, III
Vocational and Adult Education, Office of	34, IV
Educational Research and Improvement, Office of	34, VII
Elementary and Secondary Education, Office of	34, II
Emergency Oil and Gas Guaranteed Loan Board	13, V
Emergency Steel Guarantee Loan Board	13, IV
Employee Benefits Security Administration	29, XXV
Employees' Compensation Appeals Board	20, IV
Employees Loyalty Board	5, V
Employment and Training Administration	20, V
Employment Standards Administration	20, VI
Endangered Species Committee	50, IV
Energy, Department of	5, XXIII; 10, II, III, X
Federal Acquisition Regulation	48, 9
Federal Energy Regulatory Commission	5, XXIV; 18, I
Property Management Regulations	41, 109
Energy, Office of	7, XXIX
Engineers, Corps of	33, II; 36, III
Engraving and Printing, Bureau of	31, VI
Environmental Protection Agency	5, LIV; 40, I, IV, VII
Federal Acquisition Regulation	48, 15
Property Management Regulations	41, 115
Environmental Quality, Office of	7, XXXI
Equal Employment Opportunity Commission	5, LXII; 29, XIV
Equal Opportunity, Office of Assistant Secretary for	24, I
Executive Office of the President	3, I
Administration, Office of	5, XV
Environmental Quality, Council on	40, V
Management and Budget, Office of	5, III, LXXVII; 14, VI; 48, 99
National Drug Control Policy, Office of	21, III
National Security Council	32, XXI; 47, 2
Presidential Documents	3
Science and Technology Policy, Office of	32, XXIV; 47, II

Agency	CFR Title, Subtitle or Chapter
Trade Representative, Office of the United States	15, XX
Export-Import Bank of the United States	5, LII; 12, IV
Family Assistance, Office of	45, II
Farm Credit Administration	5, XXXI; 12, VI
Farm Credit System Insurance Corporation	5, XXX; 12, XIV
Farm Service Agency	7, VII, XVIII
Federal Acquisition Regulation	48, 1
Federal Aviation Administration	14, I
Commercial Space Transportation	14, III
Federal Claims Collection Standards	31, IX
Federal Communications Commission	5, XXIX; 47, I
Federal Contract Compliance Programs, Office of	41, 60
Federal Crop Insurance Corporation	7, IV
Federal Deposit Insurance Corporation	5, XXII; 12, III
Federal Election Commission	11, I
Federal Emergency Management Agency	44, I
Federal Acquisition Regulation	48, 44
Federal Employees Group Life Insurance Federal Acquisition Regulation	48, 21
Federal Employees Health Benefits Acquisition Regulation	48, 16
Federal Energy Regulatory Commission	5, XXIV; 18, I
Federal Financial Institutions Examination Council	12, XI
Federal Financing Bank	12, VIII
Federal Highway Administration	23, I, II
Federal Home Loan Mortgage Corporation	1, IV
Federal Housing Enterprise Oversight Office	12, XVII
Federal Housing Finance Board	12, IX
Federal Labor Relations Authority, and General Counsel of the Federal Labor Relations Authority	5, XIV; 22, XIV
Federal Law Enforcement Training Center	31, VII
Federal Management Regulation	41, 102
Federal Maritime Commission	46, IV
Federal Mediation and Conciliation Service	29, XII
Federal Mine Safety and Health Review Commission	5, LXXIV; 29, XXVII
Federal Motor Carrier Safety Administration	49, III
Federal Prison Industries, Inc.	28, III
Federal Procurement Policy Office	48, 99
Federal Property Management Regulations	41, 101
Federal Railroad Administration	49, II
Federal Register, Administrative Committee of	1, I
Federal Register, Office of	1, II
Federal Reserve System	12, II
Board of Governors	5, LVIII
Federal Retirement Thrift Investment Board	5, VI, LXXVI
Federal Service Impasses Panel	5, XIV
Federal Trade Commission	5, XLVII; 16, I
Federal Transit Administration	49, VI
Federal Travel Regulation System	41, Subtitle F
Fine Arts, Commission on	45, XXI
Fiscal Service	31, II
Fish and Wildlife Service, United States	50, I, IV
Fishery Conservation and Management	50, VI
Food and Drug Administration	21, I
Food and Nutrition Service	7, II
Food Safety and Inspection Service	9, III
Foreign Agricultural Service	7, XV
Foreign Assets Control, Office of	31, V
Foreign Claims Settlement Commission of the United States	45, V
Foreign Service Grievance Board	22, IX
Foreign Service Impasse Disputes Panel	22, XIV
Foreign Service Labor Relations Board	22, XIV
Foreign-Trade Zones Board	15, IV
Forest Service	36, II
General Services Administration	5, LVII; 41, 105
Contract Appeals, Board of	48, 61
Federal Acquisition Regulation	48, 5
Federal Management Regulation	41, 102

Agency	CFR Title, Subtitle or Chapter
Federal Property Management Regulations	41, 101
Federal Travel Regulation System	41, Subtitle F
General	41, 300
Payment From a Non-Federal Source for Travel Expenses	41, 304
Payment of Expenses Connected With the Death of Certain Employees	41, 303
Relocation Allowances	41, 302
Temporary Duty (TDY) Travel Allowances	41, 301
Geological Survey	30, IV
Government Accountability Office	4, I
Government Ethics, Office of	5, XVI
Government National Mortgage Association	24, III
Grain Inspection, Packers and Stockyards Administration	7, VIII; 9, II
Harry S. Truman Scholarship Foundation	45, XVIII
Health and Human Services, Department of	5, XLV; 45, Subtitle A
Centers for Medicare & Medicaid Services	42, IV
Child Support Enforcement, Office of	45, III
Children and Families, Administration for	45, II, III, IV, X
Community Services, Office of	45, X
Defense Acquisition Regulations System	48, 2
Family Assistance, Office of	45, II
Federal Acquisition Regulation	48, 3
Food and Drug Administration	21, I
Human Development Services, Office of	45, XIII
Indian Health Service	25, V; 42, I
Inspector General (Health Care), Office of	42, V
Public Health Service	42, I
Refugee Resettlement, Office of	45, IV
Homeland Security, Department of	6, I
Coast Guard	33, I; 46, I; 49, IV
Coast Guard (Great Lakes Pilotage)	46, III
Customs and Border Protection Bureau	19, I
Federal Emergency Management Agency	44, I
Immigration and Customs Enforcement Bureau	19, IV
Immigration and Naturalization	8, I
Transportation Security Administration	49, XII
Housing and Urban Development, Department of	5, LXV; 24, Subtitle B
Community Planning and Development, Office of Assistant Secretary for	24, V, VI
Equal Opportunity, Office of Assistant Secretary for	24, I
Federal Acquisition Regulation	48, 24
Federal Housing Enterprise Oversight, Office of	12, XVII
Government National Mortgage Association	24, III
Housing—Federal Housing Commissioner, Office of Assistant Secretary for	24, II, VIII, X, XX
Housing, Office of, and Multifamily Housing Assistance Restructuring, Office of	24, IV
Inspector General, Office of	24, XII
Public and Indian Housing, Office of Assistant Secretary for	24, IX
Secretary, Office of	24, Subtitle A, VII
Housing—Federal Housing Commissioner, Office of Assistant Secretary for	24, II, VIII, X, XX
Housing, Office of, and Multifamily Housing Assistance Restructuring, Office of	24, IV
Human Development Services, Office of	45, XIII
Immigration and Customs Enforcement Bureau	19, IV
Immigration and Naturalization	8, I
Immigration Review, Executive Office for	8, V
Independent Counsel, Office of	28, VII
Indian Affairs, Bureau of	25, I, V
Indian Affairs, Office of the Assistant Secretary	25, VI
Indian Arts and Crafts Board	25, II
Indian Health Service	25, V; 42, I
Industry and Security, Bureau of	15, VII
Information Resources Management, Office of	7, XXVII
Information Security Oversight Office, National Archives and Records Administration	32, XX

Agency	CFR Title, Subtitle or Chapter
Inspector General	
Agriculture Department	7, XXVI
Health and Human Services Department	42, V
Housing and Urban Development Department	24, XII
Institute of Peace, United States	22, XVII
Inter-American Foundation	5, LXIII; 22, X
Interior Department	
American Indians, Office of the Special Trustee	25, VII
Endangered Species Committee	50, IV
Federal Acquisition Regulation	48, 14
Federal Property Management Regulations System	41, 114
Fish and Wildlife Service, United States	50, I, IV
Geological Survey	30, IV
Indian Affairs, Bureau of	25, I, V
Indian Affairs, Office of the Assistant Secretary	25, VI
Indian Arts and Crafts Board	25, II
Land Management, Bureau of	43, II
Minerals Management Service	30, II
National Indian Gaming Commission	25, III
National Park Service	36, I
Reclamation, Bureau of	43, I
Secretary of the Interior, Office of	43, Subtitle A
Surface Mining and Reclamation Appeals, Board of	30, III
Surface Mining Reclamation and Enforcement, Office of	30, VII
Internal Revenue Service	26, I
International Boundary and Water Commission, United States and Mexico, United States Section	22, XI
International Development, United States Agency for	22, II
Federal Acquisition Regulation	48, 7
International Development Cooperation Agency, United States	22, XII
International Fishing and Related Activities	50, III
International Investment, Office of	31, VIII
International Joint Commission, United States and Canada	22, IV
International Organizations Employees Loyalty Board	5, V
International Trade Administration	15, III; 19, III
International Trade Commission, United States	19, II
Interstate Commerce Commission	5, XL
James Madison Memorial Fellowship Foundation	45, XXIV
Japan–United States Friendship Commission	22, XVI
Joint Board for the Enrollment of Actuaries	20, VIII
Justice Department	5, XXVIII; 28, I, XI; 40, IV
Alcohol, Tobacco, Firearms, and Explosives, Bureau of	27, II
Drug Enforcement Administration	21, II
Federal Acquisition Regulation	48, 28
Federal Claims Collection Standards	31, IX
Federal Prison Industries, Inc.	28, III
Foreign Claims Settlement Commission of the United States	45, V
Immigration Review, Executive Office for	8, V
Offices of Independent Counsel	28, VI
Prisons, Bureau of	28, V
Property Management Regulations	41, 128
Labor Department	5, XLII
Benefits Review Board	20, VII
Employee Benefits Security Administration	29, XXV
Employees' Compensation Appeals Board	20, IV
Employment and Training Administration	20, V
Employment Standards Administration	20, VI
Federal Acquisition Regulation	48, 29
Federal Contract Compliance Programs, Office of	41, 60
Federal Procurement Regulations System	41, 50
Labor-Management Standards, Office of	29, II, IV
Mine Safety and Health Administration	30, I
Occupational Safety and Health Administration	29, XVII
Public Contracts	41, 50

Agency	CFR Title, Subtitle or Chapter
Secretary of Labor, Office of	29, Subtitle A
Veterans' Employment and Training Service, Office of the Assistant Secretary for	41, 61; 20, IX
Wage and Hour Division	29, V
Workers' Compensation Programs, Office of	20, I
Labor-Management Standards, Office of	29, II, IV
Land Management, Bureau of	43, II
Legal Services Corporation	45, XVI
Library of Congress	36, VII
Copyright Office	37, II
Copyright Royalty Board	37, III
Local Television Loan Guarantee Board	7, XX
Management and Budget, Office of	5, III, LXXVII; 14, VI; 48, 99
Marine Mammal Commission	50, V
Maritime Administration	46, II
Merit Systems Protection Board	5, II
Micronesian Status Negotiations, Office for	32, XXVII
Mine Safety and Health Administration	30, I
Minerals Management Service	30, II
Minority Business Development Agency	15, XIV
Miscellaneous Agencies	1, IV
Monetary Offices	31, I
Morris K. Udall Scholarship and Excellence in National Environmental Policy Foundation	36, XVI
National Aeronautics and Space Administration	5, LIX; 14, V
Federal Acquisition Regulation	48, 18
National Agricultural Library	7, XLI
National Agricultural Statistics Service	7, XXXVI
National and Community Service, Corporation for	45, XII, XXV
National Archives and Records Administration	5, LXVI; 36, XII
Information Security Oversight Office	32, XX
National Bureau of Standards	15, II
National Capital Planning Commission	1, IV
National Commission for Employment Policy	1, IV
National Commission on Libraries and Information Science	45, XVII
National Council on Disability	34, XII
National Counterintelligence Center	32, XVIII
National Credit Union Administration	12, VII
National Crime Prevention and Privacy Compact Council	28, IX
National Drug Control Policy, Office of	21, III
National Foundation on the Arts and the Humanities	45, XI
National Highway Traffic Safety Administration	23, II, III; 49, V
National Imagery and Mapping Agency	32, I
National Indian Gaming Commission	25, III
National Institute for Literacy	34, XI
National Institute of Standards and Technology	15, II
National Labor Relations Board	5, LXI; 29, I
National Marine Fisheries Service	50, II, IV, VI
National Mediation Board	29, X
National Oceanic and Atmospheric Administration	15, IX; 50, II, III, IV, VI
National Park Service	36, I
National Railroad Adjustment Board	29, III
National Railroad Passenger Corporation (AMTRAK)	49, VII
National Science Foundation	5, XLIII; 45, VI
Federal Acquisition Regulation	48, 25
National Security Council	32, XXI
National Security Council and Office of Science and Technology Policy	47, II
National Telecommunications and Information Administration	15, XXIII; 47, III
National Transportation Safety Board	49, VIII
National Weather Service	15, IX
Natural Resources Conservation Service	7, VI
Navajo and Hopi Indian Relocation, Office of	25, IV
Navy Department	32, VI
Federal Acquisition Regulation	48, 52

Agency	CFR Title, Subtitle or Chapter
Neighborhood Reinvestment Corporation	24, XXV
Northeast Interstate Low-Level Radioactive Waste Commission	10, XVIII
Nuclear Regulatory Commission	5, XLVIII; 10, I
Federal Acquisition Regulation	48, 20
Occupational Safety and Health Administration	29, XVII
Occupational Safety and Health Review Commission	29, XX
Offices of Independent Counsel	28, VI
Oklahoma City National Memorial Trust	36, XV
Operations Office	7, XXVIII
Overseas Private Investment Corporation	5, XXXIII; 22, VII
Patent and Trademark Office, United States	37, I
Payment From a Non-Federal Source for Travel Expenses	41, 304
Payment of Expenses Connected With the Death of Certain Employees	41, 303
Peace Corps	22, III
Pennsylvania Avenue Development Corporation	36, IX
Pension Benefit Guaranty Corporation	29, XL
Personnel Management, Office of	5, I, XXXV; 45, VIII
Federal Acquisition Regulation	48, 17
Federal Employees Group Life Insurance Federal Acquisition Regulation	48, 21
Federal Employees Health Benefits Acquisition Regulation	48, 16
Pipeline and Hazardous Materials Safety Administration	49, I
Postal Rate Commission	5, XLVI; 39, III
Postal Service, United States	5, LX; 39, I
Postsecondary Education, Office of	34, VI
President's Commission on White House Fellowships	1, IV
Presidential Documents	3
Presidio Trust	36, X
Prisons, Bureau of	28, V
Procurement and Property Management, Office of	7, XXXII
Productivity, Technology and Innovation, Assistant Secretary	37, IV
Public Contracts, Department of Labor	41, 50
Public and Indian Housing, Office of Assistant Secretary for	24, IX
Public Health Service	42, I
Railroad Retirement Board	20, II
Reclamation, Bureau of	43, I
Refugee Resettlement, Office of	45, IV
Regional Action Planning Commissions	13, V
Relocation Allowances	41, 302
Research and Innovative Technology Administration	49, XI
Rural Business-Cooperative Service	7, XVIII, XLII
Rural Development Administration	7, XLII
Rural Housing Service	7, XVIII, XXXV
Rural Telephone Bank	7, XVI
Rural Utilities Service	7, XVII, XVIII, XLII
Saint Lawrence Seaway Development Corporation	33, IV
Science and Technology Policy, Office of	32, XXIV
Science and Technology Policy, Office of, and National Security Council	47, II
Secret Service	31, IV
Securities and Exchange Commission	17, II
Selective Service System	32, XVI
Small Business Administration	13, I
Smithsonian Institution	36, V
Social Security Administration	20, III; 48, 23
Soldiers' and Airmen's Home, United States	5, XI
Special Counsel, Office of	5, VIII
Special Education and Rehabilitative Services, Office of	34, III
State Department	22, I; 28, XI
Federal Acquisition Regulation	48, 6
Surface Mining and Reclamation Appeals, Board of	30, III
Surface Mining Reclamation and Enforcement, Office of	30, VII
Surface Transportation Board	49, X
Susquehanna River Basin Commission	18, VIII

Agency	CFR Title, Subtitle or Chapter
Technology Administration	15, XI
Technology Policy, Assistant Secretary for	37, IV
Technology, Under Secretary for	37, V
Tennessee Valley Authority	5, LXIX; 18, XIII
Thrift Supervision Office, Department of the Treasury	12, V
Trade Representative, United States, Office of	15, XX
Transportation, Department of	5, L
Commercial Space Transportation	14, III
Contract Appeals, Board of	48, 63
Emergency Management and Assistance	44, IV
Federal Acquisition Regulation	48, 12
Federal Aviation Administration	14, I
Federal Highway Administration	23, I, II
Federal Motor Carrier Safety Administration	49, III
Federal Railroad Administration	49, II
Federal Transit Administration	49, VI
Maritime Administration	46, II
National Highway Traffic Safety Administration	23, II, III; 49, V
Pipeline and Hazardous Materials Safety Administration	49, I
Saint Lawrence Seaway Development Corporation	33, IV
Secretary of Transportation, Office of	14, II; 49, Subtitle A
Surface Transportation Board	49, X
Transportation Statistics Bureau	49, XI
Transportation, Office of	7, XXXIII
Transportation Security Administration	49, XII
Transportation Statistics Bureau	49, XI
Travel Allowances, Temporary Duty (TDY)	41, 301
Treasury Department	5, XXI; 12, XV; 17, IV; 31, IX
Alcohol and Tobacco Tax and Trade Bureau	27, I
Community Development Financial Institutions Fund	12, XVIII
Comptroller of the Currency	12, I
Customs and Border Protection Bureau	19, I
Engraving and Printing, Bureau of	31, VI
Federal Acquisition Regulation	48, 10
Federal Law Enforcement Training Center	31, VII
Fiscal Service	31, II
Foreign Assets Control, Office of	31, V
Internal Revenue Service	26, I
International Investment, Office of	31, VIII
Monetary Offices	31, I
Secret Service	31, IV
Secretary of the Treasury, Office of	31, Subtitle A
Thrift Supervision, Office of	12, V
Truman, Harry S. Scholarship Foundation	45, XVIII
United States and Canada, International Joint Commission	22, IV
United States and Mexico, International Boundary and Water Commission, United States Section	22, XI
Utah Reclamation Mitigation and Conservation Commission	43, III
Veterans Affairs Department	38, I
Federal Acquisition Regulation	48, 8
Veterans' Employment and Training Service, Office of the Assistant Secretary for	41, 61; 20, IX
Vice President of the United States, Office of	32, XXVIII
Vocational and Adult Education, Office of	34, IV
Wage and Hour Division	29, V
Water Resources Council	18, VI
Workers' Compensation Programs, Office of	20, I
World Agricultural Outlook Board	7, XXXVIII

List of CFR Sections Affected

All changes in this volume of the Code of Federal Regulations that were made by documents published in the FEDERAL REGISTER since January 1, 2001, are enumerated in the following list. Entries indicate the nature of the changes effected. Page numbers refer to FEDERAL REGISTER pages. The user should consult the entries for chapters and parts as well as sections for revisions.

Title 40 was established at 36 FR 12213, June 29, 1971. For the period before January 1, 2001, see the ''List of CFR Sections Affected, 1964–1972, 1973–1985, and 1986–2000'' published in 10 separate volumes.

2001

40 CFR

66 FR Page

86.1213–04 Added 5168
86.1306–07 Added 5168
86.1309–90 Heading and (a)(1) revised 5169
86.1310–07 Added 5169
86.1312–2007 Added 5177
86.1313–2004 Added 5178
86.1313–2007 Added 5180
86.1319–90 (e) redesignated as (f); new (e) added 5181
86.1323–2007 Added 5182
86.1330–90 (a) revised 5184
86.1334–84 (a)(1) and (2) revised 5186
86.1337–2007 Added 5186
86.1338–2007 Added 5187
86.1339–90 (h) added 5187
86.1360–2007 Heading, (b), (e)(2), (3) and (6)(ii) revised; introductory text added 5188
86.1370–2007 (a), (b)(6) and (d) revised; (b)(5) removed; (b)(7) and (g) added 5188
86.1803–01 Amended 5189
86.1806–05 (b) introductory text, (1) and (l) revised 5189
86.1807–07 Added 5189
86.1808–07 Added 5190
86.1810–01 Introductory text revised 5190
(l)(1) introductory text and (m)(1) introductory text revised; eff. 7–12–01 19309
86.1811–04 (c)(3)(i), (ii) and (e) introductory text revised; (f)(2)(i) amended; eff. 7–12–01 19309
86.1816–05 (g) revised 5190

40 CFR—Continued

66 FR Page

86.1816–08 Added 5190
86.1817–08 Added 5192
86.1824–07 Added 5192
86.1829–01 (b)(1)(iii)(B) revised; (b)(1)(iii)(F) added 5193
(b)(2)(i) revised; eff. 7–12–01 19310
86.1835–01 (d) introductory text revised; eff. 7–12–01 19310
86.1846–01 (a)(3) revised; eff. 7–12–01 19310
86.1860–04 (g)(2)(ii) and (h) revised; eff. 7–12–01 19310
86.1861–04 (a)(5) revised; (b)(1) amended; eff. 7–12–01 19311
86.1863–07 Added 5193

2002

40 CFR

67 FR Page

Chapter I

86 Authority citation revised 72825
86.1105–87 (e) revised; (i) added 51477
86.1801–01 (d) revised 72825
86.1811–04 (c)(4)(iv), (6) Table SO4–2 and (f)(4) revised; (f)(7) added 72825
86.1838–01 (b)(1)(i), (ii) and (2)(i) revised 72826

2003

40 CFR

68 FR Page

Chapter I

86.1806–04 Added; eff. 8–18–03 35799
86.1806–05 (h) and (j) revised; eff. 8–18–03 35800

40 CFR—Continued

68 FR Page

Chapter I—Continued

86.1806–05 Regulation at 68 FR 35792 withdrawn in part 48561
86.1808–01 (f) revised; eff. 8-26-03 38455
86.1808–07 (a) through (f) revised; eff. 8-26-03 38461
86.1863–07 (a) and (b) revised; eff. 8–18–03 35801

2004

40 CFR

69 FR Page

Title 40 Nomenclature change 18803

Chapter I

86.884–14 (a) amended 2441
86.903-93 Revised; eff. 7-12-04 26251
86.908-93 (a)(1)(iii) revised; eff. 7-12-04 26252

2005

40

70 CFR Page

Chapter I

86.884–8 (c) introductory text revised 40437
86.884–10 (a) introductory text revised 40437
86.884–12 (c)(2) revised 40437
86.1005–90 (a)(1)(i), (ii), (2)(vi)(A) and (B) revised 40437
86.1108–87 (a)(1)(i), (ii), (2)(vi)(A) and (B) revised 40437
86.1213–08 Added 40437
86.1232-96 (n) added 72928
86.1234-96 (g)(3) added 72928
86.1301 Redesignated from 86.1301–90 and revised 40438
86.1301–90 Redesignated as 86.1301 40438
86.1304 Redesignated from 86.1304–90 and revised 40438
86.1304–90 Redesignated as 86.1304 40438
86.1305–2010 Added 40438
86.1321–90 (a)(3)(ii) revised 40438
86.1321–94 (a)(3)(ii) revised 40438
86.1333–2010 Added 40438
86.1360–2007 (b) revised; (c), (e), (h) and (i) removed 40439
86.1362–2007 Added 40439
86.1363–2007 Added 40440
86.1370–2007 (a) revised 40441
86.1375–2007 Added; eff. 8–15–05 34619
86.1509–84 (c) and (d) revised 40441
86.1511–84 (a)(1) and (b) revised 40441

40—Continued

70 CFR Page

Chapter I—Continued

86.1513–90 Revised 40441
86.1513–94 Revised 40441
86.1514–84 (b) and (c) revised 40441
86.1519–84 Revised 40441
86.1524–84 Revised 40441
86.1530–84 (b) revised 40441
86.1537–84 (c), (e)(6) and (f) revised 40441
86.1540–84 (b) and (c) revised 40441
86.1542–84 (a) introductory text revised 40441
86.1544–84 (b)(1), (2) and (c) revised 40441
86.1708–99 Tables R99–5 and R99–6 revised 40442
86.1709–99 (c)(1) introductory text and (e)(2) Table R99–14.2 revised 40442
86.1710–99 (c)(8) introductory text revised 40442
86.1711–99 Heading and (a) revised 40442
86.1806–04 (j) revised; (l) added 75410
86.1806–05 (h)(3) and (m) added; (j) revised 75410
86.1807–07 (h) revised 40442
86.1807-01 (a)(3)(iv), (vii), (c)(1)(iii), (2) and (3) removed; (a)(3)(v), (c)(1) introductory text, (f) and (g) revised; (c)(1)(ii)(C) and (D) added 72928
86.1808–01 (f)(19)(iii) revised 40442
86.1808–07 (g) revised 40443
86.1810-01 (j)(4) and (m) added; (l)(1) introductory text revised; (l)(2)(i), (ii), second (l)(2) and (3) removed 72928
86.1811–04 (c)(6) Table S04–2 revised 40443
86.1816–08 (j)(2) revised 40443
86.1829-01 (b)(2)(iii) added 72929
86.1834–01 (b)(4) introductory text, (6)(ii) introductory text and (D) revised 40443
86.1845-01 (c)(5)(ii) revised 72929
86.1845-04 (b)(5)(ii) and (c)(5)(ii) revised 72929
86.1901—86.1935 (Subpart T) Added; eff. 8–15–05 34619
86 Appendix I amended 40443

2006

(Regulations published from January 1, 2006, through July 1, 2006)

40 CFR

71 FR Page

Chapter I

86.1803–01 Amended 2829
86.1804–01 Amended 2829
86.1811–04 (f)(8) and (p)(5) added 16060
86.1817–05 (i)(3)(i) revised 2830
86.1823–08 Added 2830
86.1824–08 Added 2834
86.1825–08 Added 2835
86.1826–01 (a) and (b)(3)(iv) revised 2836

40 CFR—Continued

71 FR Page

Chapter I—Continued

86.1829-01 (a)(3) and (d)(1) revised 2836
86.1830–01 (b)(1), (2) and (c)(1) through (4) revised 2836
86.1831–01 (a)(1) and (b)(1) revised 2836
86.1838–01 (c)(1) revised 2836
86.1839–01 (b) revised 2836
86.1841–01 (a)(1) introductory text and (2) revised; (a)(3) removed 2836
86.1844–01 (d)(4) revised 2837
86.2500 (Subpart AA) Removed 24819
86 Appendices V, VII, VIII and IX added 2837