AUTHENTICATED
U.S. GOVERNMENT
INFORMATION
GPO

Standard Reference Test Tire,'' at a speed of 64.4 km/h (40.0 mph), without water delivery (incorporated by reference; see 49 CFR 571.5).

S6.2.2. *Gradient*. The test surface has not more than a 1 percent gradient in the direction of testing and not more than a 2 percent gradient perpendicular to the direction of testing.

S6.2.3. *Lane width*. The lane width is not less than 3.5 m (11.5 ft).

S6.3. *Vehicle conditions*.

S6.3.1. The test weight for maximum speed is unloaded vehicle weight plus a mass of 78 kg (170 pounds), including driver and instrumentation.

S6.3.2. No adjustment, repair or replacement of any component is allowed after the start of the first performance test.

S6.3.3. *Tire inflation pressure*. Cold inflation pressure is not more than the maximum permissible pressure molded on the tire sidewall.

S6.3.4. *Break-in*. The vehicle completes the manufacturer's recommended break-in agenda as a minimum condition prior to beginning the performance tests.

S6.3.5. *Vehicle openings*. All vehicle openings (doors, windows, hood, trunk, convertible top, cargo doors, etc.) are closed except as required for instrumentation purposes.

S6.3.6. *Battery powered vehicles*. Prior to beginning the performance tests, propulsion batteries are at the state of charge recommended by the manufacturer or, if the manufacturer has made no recommendation, at a state of charge of not less than 95 percent. No further charging of any propulsion battery is permissible.

S7. *Test procedure*. Each vehicle must meet the performance limit specified in S5(a) under the following test procedure. The maximum speed performance is determined by measuring the maximum attainable vehicle speed at any point in a distance of 1.6 km (1.0 mile) from a standing start and repeated in the opposite direction within 30 minutes.

[63 FR 33216, June 17, 1998, as amended at 68 FR 43972, July 25, 2003]

PART 572—ANTHROPOMORPHIC TEST DEVICES

Subpart A—General

Sec.
572.1 Scope.
572.2 Purpose.
572.3 Application.
572.4 Terminology.

Subpart B—50th Percentile Male

572.5 General description.
572.6 Head.
572.7 Neck.
572.8 Thorax.
572.9 Lumbar spine, abdomen, and pelvis.
572.10 Limbs.
572.11 Test conditions and instrumentation.

Subpart C—3-Year-Old Child

572.15 General description.
572.16 Head.
572.17 Neck.
572.18 Thorax.
572.19 Lumbar spine, abdomen and pelvis.
572.20 Limbs.
572.21 Test conditions and instrumentation.

Subpart D—6-Month-Old Infant

572.25 General description.

Subpart E—Hybrid III Test Dummy

572.30 Incorporated materials.
572.31 General description.
572.32 Head.
572.33 Neck.
572.34 Thorax.
572.35 Limbs.
572.36 Test conditions and instrumentation.

Subpart F—Side Impact Dummy 50th Percentile Male

572.40 Incorporated materials.
572.41 General description.
572.42 Thorax.
572.43 Lumbar spine and pelvis.
572.44 Instrumentation and test conditions.
APPENDIX A TO SUBPART F

Subparts G–H [Reserved]

Subpart I—6-Year-Old Child

572.70 Incorporation by reference.
572.71 General description.
572.72 Head assembly and test procedure.
572.73 Neck assembly and test procedure.
572.74 Thorax assembly and test procedure.
572.75 Lumbar spine, abdomen, and pelvis assembly and test procedure.
572.76 Limbs assembly and test procedure.

572.77 Instrumentation.
572.78 Performance test conditions.
FIGURES TO SUBPART I

Subpart J—9-Month Old Child

572.80 Incorporated materials.
572.81 General description.
572.82 Head.
572.83 Head-neck.
572.84 Thorax.
572.85 Lumbar spine flexure.
572.86 Test conditions and dummy adjustment.

Subpart K—Newborn Infant

572.90 Incorporation by reference.
572.91 General description.

Subpart L—Free Motion Headform

572.100 Incorporation by reference.
572.101 General description.
572.102 Drop test.
572.103 Test conditions and instrumentation.

Subpart M—Side Impact Hybrid Dummy 50th Percentile Male.

572.110 Materials incorporated by reference.
572.111 General description.
572.112 Head assembly.
572.113 Neck assembly.
572.114 Thorax.
572.115 Lumbar spine and pelvis.
572.116 Instrumentation and test conditions.

Subpart N—Six-year-old Child Test Dummy, Beta Version

572.120 Incorporation by reference.
572.121 General description.
572.122 Head assembly and test procedure.
572.123 Neck assembly and test procedure.
572.124 Thorax assembly and test procedure.
572.125 Upper and lower torso assemblies and torso flexion test procedure.
572.126 Knees and knee impact test procedure.
572.127 Test conditions and instrumentation.
FIGURES TO SUBPART N

Subpart O—Hybrid III 5th Percentile Female Test Dummy, Alpha Version

572.130 Incorporation by reference.
572.131 General description.
572.132 Head assembly and test procedure.
572.133 Neck assembly and test procedure.
572.134 Thorax assembly and test procedure.
572.135 Upper and lower torso assemblies and torso flexion test procedure.
572.136 Knees and knee impact test procedure.
572.137 Test conditions and instrumentation.
FIGURES TO SUBPART O

Subpart P—Hybrid III 3-Year-Old Child Crash Test Dummy, Alpha Version

572.140 Incorporation by reference.
572.141 General description.
572.142 Head assembly and test procedure.
572.143 Neck-headform assembly and test procedure.
572.144 Thorax assembly and test procedure.
572.145 Upper and lower torso assemblies and torso flexion test procedure.
572.146 Test condition and instrumentation.
FIGURES TO SUBPART P

Subpart R—CRABI 12-Month-Old Infant Crash Test Dummy, Alpha Version

572.150 Incorporation by reference.
572.151 General description.
572.152 Head assembly and test procedure.
572.153 Neck-headform assembly and test procedure.
572.154 Thorax assembly and test procedure.
572.155 Test condition and instrumentation.
FIGURES TO SUBPART R

Subpart S—Hybrid III Six-Year-Old Weighted Child Test Dummy

572.160 Incorporation by reference.
572.161 General description.
572.162 Head assembly and test procedure.
572.163 Neck assembly and test procedure.
572.164 Thorax assembly and test procedure.
572.165 Upper and lower torso assemblies and torso flexion test procedure.
572.166 Knees and knee impact test procedure.
572.167 Test conditions and instrumentation.
FIGURES TO SUBPART S

AUTHORITY: 49 U.S.C. 322, 30111, 30115, 30117 and 30166; delegation of authority at 49 CFR 1.50.

EDITORIAL NOTES: 1. For compliance provisions relating to a vehicle's conformance with the performance requirements of Standard No. 208 (§ 571.208) relating to the part 572 test dummy, see the ''Effective Date Note'' at subpart E of this part.

2. Nomenclature changes to part 572 appear at 69 FR 18803, Apr. 9, 2004.

Subpart A—General

§ 572.1 Scope.

This part describes the anthropomorphic test devices that are to be used for compliance testing of motor vehicles and motor vehicle

equipment with motor vehicle safety standards.

[60 FR 43058, Aug. 18, 1995]

§ 572.2 Purpose.

The design and performance criteria specified in this part are intended to describe measuring tools with sufficient precision to give repetitive and correlative results under similar test conditions and to reflect adequately the protective performance of a vehicle or item of motor vehicle equipment with respect to human occupants.

[38 FR 20451, Aug. 1, 1973, as amended at 42 FR 7151, Feb. 7, 1977]

§ 572.3 Application.

This part does not in itself impose duties or liabilities on any person. It is a description of tools that measure the performance of occupant protection systems required by the safety standards that incorporate it. It is designed to be referenced by, and become a part of, the test procedures specified in motor vehicle safety standards such as Standard No. 208, Occupant Crash Protection.

[38 FR 20451, Aug. 1, 1973, as amended at 42 FR 7152, Feb. 7, 1977]

§ 572.4 Terminology.

(a) The term *dummy*, when used in this subpart A, refers to any test device described by this part. The term *dummy*, when used in any other subpart of this part, refers to the particular dummy described in that part.

(b) Terms describing parts of the dummy, such as *head*, are the same as names for corresponding parts of the human body.

(c) The term *unimodal*, when used in subparts C and I, refers to an acceleration-time curve which has only one prominent peak.

[38 FR 20451, Aug. 1, 1973, as amended at 42 FR 7152, Feb. 7, 1977; 44 FR 76530, Dec. 27, 1979; 56 FR 57836, Nov. 14, 1991]

Subpart B—50th Percentile Male

§ 572.5 General description.

(a) The dummy consists of the component assemblies specified in Figure 1, which are described in their entirety by means of approximately 250 drawings and specifications that are grouped by component assemblies under the following nine headings:

SA 150 M070—Right arm assembly
SA 150 M071—Left arm assembly
SA 150 M050—Lumbar spine assembly
SA 150 M060—Pelvis and abdomen assembly
SA 150 M080—Right leg assembly
SA 150 M081—Left leg assembly
SA 150 M010—Head assembly
SA 150 M020—Neck assembly
SA 150 M030—Shoulder-thorax assembly.

(b) The drawings and specifications referred to in this regulation that are not set forth in full are hereby incorporated in this part by reference. These materials are thereby made part of this regulation. The Director of the Federal Register has approved the materials incorporated by reference. For materials subject to change, only the specific version approved by the Director of the Federal Register and specified in the regulation are incorporated. A notice of any change will be published in the FEDERAL REGISTER. As a convenience to the reader, the materials incorporated by reference are listed in the Finding Aid Table found at the end of this volume of the Code of Federal Regulations.

(c) The materials incorporated by reference are available for examination in Docket 73–08, Docket Section, National Highway Traffic Safety Administration, Room 5109, 400 Seventh Street SW., Washington, DC, 20590. Copies may be obtained from Rowley-Scher Reprographics, Inc., 1216 K Street NW., Washington, DC 20005 ((202) 628–6667). The drawings and specifications are also on file in the reference library of the Office of the Federal Register, National Archives and Records Administration, Washington, DC.

(d) Adjacent segments are joined in a manner such that throughout the range of motion and also under crash impact conditions there is no contact between metallic elements except for contacts that exist under static conditions.

(e) The structural properties of the dummy are such that the dummy conforms to this part in every respect both before and after being used in vehicle

tests specified in Standard No. 208 of this chapter (571.208).

(f) A specimen of the dummy is available for surface measurements and access can be arranged by contacting: Office of Vehicle Safety Standards, National Highway Traffic Safety Administration, 400 Seventh Street, SW., Washington, DC 20590.

[50 FR 25423, June 19, 1985]

§ 572.6 Head.

(a) The head consists of the assembly shown as number SA 150 M010 in Figure 1 and conforms to each of the drawings subtended by number SA 150 M010.

(b) When the head is dropped from a height of 10 inches in accordance with paragraph (c) of this section, the peak resultant accelerations at the location of the accelerometers mounted in the head form in accordance with § 572.11(b) shall be not less than 210g, and not more than 260g. The acceleration/time curve for the test shall be unimodal and shall lie at or above the 100g level for an interval not less than 0.9 milliseconds and not more than 1.5 milliseconds. The lateral acceleration vector shall not exceed 10g.

(c) Test procedure:

(1) Suspend the head as shown in Figure 2, so that the lowest point on the forehead is 0.5 inches below the lowest point on the dummy's nose when the midsagittal plane is vertical.

(2) Drop the head from the specified height by means that ensures instant release onto a rigidly supported flat horizontal steel plate, 2 inches thick and 2 feet square, which has a clean, dry surface and any microfinish of not less than 8 microinches (rms) and not more than 80 microinches (rms).

(3) Allow a time period of at least 2 hours between successive tests on the same head.

[38 FR 20451, Aug. 1, 1973, as amended at 42 FR 7152, Feb. 7, 1977]

§ 572.7 Neck.

(a) The neck consists of the assembly shown as number SA 150 M020 in Figure 1 and conforms to each of the drawings subtended by number SA 150 M020.

(b) When the neck is tested with the head in accordance with paragraph (c) of this section, the head shall rotate in reference to the pendulum's longitudinal centerline a total of 68° ±5° about its center of gravity, rotating to the extent specified in the following table at each indicated point in time, measured from impact, with a chordal displacement measured at its center of gravity that is within the limits specified. The chordal displacement at time T is defined as the straight line distance between (1) the position relative to the pendulum arm of the head center of gravity at time zero, and (2) the position relative to the pendulum arm of the head center of gravity at time T as illustrated by Figure 3. The peak resultant acceleration recorded at the location of the accelerometers mounted in the head form in accordance with § 572.11(b) shall not exceed 26g. The pendulum shall not reverse direction until the head's center of gravity returns to the original zero time position relative to the pendulum arm.

Rotation (degrees)	Time (ms) ±(2+.08T)	Chordal Displacement (inches ±0.5)
0	0	0.0
30	30	2.6
60	46	4.8
Maximum	60	5.5
60	75	4.8
30	95	2.6
0	112	0.0

(c) Test procedure: (1) Mount the head and neck on a rigid pendulum as specified in Figure 4, so that the head's midsagittal plane is vertical and coincides with the plane of motion of the pendulum's longitudinal centerline. Mount the neck directly to the pendulum as shown in Figure 4.

(2) Release the pendulum and allow it to fall freely from a height such that the velocity at impact is 23.5 ±2.0 feet per second (fps), measured at the center of the accelerometer specified in Figure 4.

(3) Decelerate the pendulum to a stop with an acceleration-time pulse described as follows:

(i) Establish 5g and 20g levels on the a-t curve.

(ii) Establish t_1 at the point where the rising a-t curve first crosses the 5g level, t_2 at the point where the rising a-t curve first crosses the 20g level, t_2 at the point where the decaying a-t curve last crosses the 20g level, and t_4 at the

point where the decaying a-t curve first crosses the 5g level.

(iii) t_2–t_1 shall be not more than 3 milliseconds.

(iv) t_3–t_2 shall be not less than 25 milliseconds and not more than 30 milliseconds.

(v) t_4–t_3 shall be not more than 10 milliseconds.

(vi) The average deceleration between t_2 and t_3 shall be not less than 20g and not more than 24g.

(4) Allow the neck to flex without impact of the head or neck with any object other than the pendulum arm.

[38 FR 20451, Aug. 1, 1973, as amended at 42 FR 7152, Feb. 7, 1977; 42 FR 12176, Mar. 3, 1977; 45 FR 40596, June 16, 1980]

§ 572.8 Thorax.

(a) The thorax consists of the assembly shown as number SA 150 M030 in Figure 1, and conforms to each of the drawings subtended by number SA 150 M030.

(b) The thorax contains enough unobstructed interior space behind the rib cage to permit the midpoint of the sternum to be depressed 2 inches without contact between the rib cage and other parts of the dummy or its instrumentation, except for instruments specified in paragraph (d)(7) of this section.

(c) When impacted by a test probe conforming to § 572.11(a) at 14 fps and at 22 fps in accordance with paragraph (d) of this section, the thorax shall resist with forces measured by the test probe of not more than 1450 pounds and 2250 pounds, respectively, and shall deflect by amounts not greater than 1.1 inches and 1.7 inches, respectively. The internal hysteresis in each impact shall not be less than 50 percent and not more than 70 percent.

(d) Test procedure: (1) With the dummy seated without back support on a surface as specified in § 572.11(i) and in the orientation specified in § 572.11(i), adjust the dummy arms and legs until they are extended horizontally forward parallel to the midsagittal plane.

(2) Place the longitudinal center line of the test probe so that it is 17.7 ±0.1 inches above the seating surface at impact.

(3) Align the test probe specified in § 572.11(a) so that at impact its longitudinal centerline coincides within 2 degrees of a horizontal line in the dummy's midsagittal plane.

(4) Adjust the dummy so that the surface area on the thorax immediately adjacent to the projected longitudinal center line of the test probe is vertical. Limb support, as needed to achieve and maintain this orientation, may be provided by placement of a steel rod of any diameter not less than one-quarter of an inch and not more than three-eighths of an inch, with hemispherical ends, vertically under the limb at its projected geometric center.

(5) Impact the thorax with the test probe so that its longitudinal centerline falls within 2 degrees of a horizontal line in the dummy's midsagittal plane at the moment of impact.

(6) Guide the probe during impact so that it moves with no significant lateral, vertical, or rotational movement.

(7) Measure the horizontal deflection of the sternum relative to the thoracic spine along the line established by the longitudinal centerline of the probe at the moment of impact, using a potentiometer mounted inside the sternum.

(8) Measure hysteresis by determining the ratio of the area between the loading and unloading portions of the force deflection curve to the area under the loading portion of the curve.

[38 FR 20451, Aug. 1, 1973, as amended at 42 FR 7152, Feb. 7, 1977]

§ 572.9 Lumbar spine, abdomen, and pelvis.

(a) The lumbar spine, abdomen, and pelvis consist of the assemblies designated as numbers SA 150 M050 and SA 150 M060 in Figure 1 and conform to the drawings subtended by these numbers.

(b) When subjected to continuously applied force in accordance with paragraph (c) of this section, the lumbar spine assembly shall flex by an amount that permits the rigid thoracic spine to rotate from its initial position in accordance with Figure 11 by the number of degrees shown below at each specified force level, and straighten upon removal of the force to within 12 degrees of its initial position in accordance with Figure 11.

Flexion (degrees)	Force (±6 pounds)
0	0
20	28
30	40
40	52

(c) Test procedure: (1) Assemble the thorax, lumbar spine, pelvic, and upper leg assemblies (above the femur force transducers), ensuring that all component surfaces are clean, dry, and untreated unless otherwise specified, and attach them to the horizontal fixture shown in Figure 5 at the two link rod pins and with the mounting brackets for the lumbar test fixtures illustrated in Figures 6 to 9.

(2) Attach the rear mounting of the pelvis to the pelvic instrument cavity rear face at the four ¼″ cap screw holes and attach the front mounting at the femur axial rotation joint. Tighten the mountings so that the pelvic-lumbar adapter is horizontal and adjust the femur friction plungers at each hip socket joint to 240 inch-pounds torque.

(3) Flex the thorax forward 50° and then rearward as necessary to return it to its initial position in accordance with Figure 11 unsupported by external means.

(4) Apply a forward force perpendicular to the thorax instrument cavity rear face in the midsagittal plane 15 inches above the top surface of the pelvic-lumbar adapter. Apply the force at any torso deflection rate between .5 and 1.5 degrees per second up to 40° of flexion but no further, continue to apply for 10 seconds that force necessary to maintain 40° of flexion, and record the force with an instrument mounted to the thorax as shown in Figure 5. Release all force as rapidly as possible and measure the return angle 3 minutes after the release.

(d) When the abdomen is subjected to continuously applied force in accordance with paragraph (e) of this section, the abdominal force-deflection curve shall be within the two curves plotted in Figure 10.

(e) Test procedure: (1) Place the assembled thorax, lumbar spine and pelvic assemblies in a supine position on a flat, rigid, smooth, dry, clean horizontal surface, ensuring that all component surfaces are clean, dry, and untreated unless otherwise specified.

(2) Place a rigid cylinder 6 inches in diameter and 18 inches long transversely across the abdomen, so that the cylinder is symmetrical about the midsagittal plane, with its longitudinal centerline horizontal and perpendicular to the midsagittal plane at a point 9.2 inches above the bottom line of the buttocks, measured with the dummy positioned in accordance with Figure 11.

(3) Establish the zero deflection point as the point at which a force of 10 pounds has been reached.

(4) Apply a vertical downward force through the cylinder at any rate between 0.25 and 0.35 inches per second.

(5) Guide the cylinder so that it moves without significant lateral or rotational movement.

[42 FR 7152, Feb. 7, 1977]

§ 572.10 Limbs.

(a) The limbs consist of the assemblies shown as numbers SA 150 M070, SA 150 M071, SA 150 M080, and SA 150 M081 in Figure 1 and conform to the drawings subtended by these numbers.

(b) When each knee is impacted at 6.9 ft/sec. in accordance with paragraph (c) of this section, the maximum force on the femur shall be not more than 2500 pounds and not less than 1850 pounds, with a duration above 1000 pounds of not less than 1.7 milliseconds.

(c) Test procedure: (1) Seat the dummy without back support on a surface as specified in § 572.11(i) that is 17.3 ±0.2 inches above a horizontal surface, oriented as specified in § 572.11(i), and with the hip joint adjustment at any setting between 1g and 2g. Place the dummy legs in planes parallel to its midsagittal plane (knee pivot centerline perpendicular to the midsagittal plane) and with the feet flat on the horizontal surface. Adjust the feet and lower legs until the lines between the midpoints of the knee pivots and the ankle pivots are at any angle not less than 2 degrees and not more than 4 degrees rear of the vertical, measured at the centerline of the knee pivots.

(2) Reposition the dummy if necessary so that the rearmost point of the lower legs at the level one inch below the seating surface remains at any distance not less than 5 inches and

not more than 6 inches forward of the forward edge of the seat.

(3) Align the test probe specified in § 572.11(a) so that at impact its longitudinal centerline coincides within ±2° with the longitudinal centerline of the femur.

(4) Impact the knee with the test probe moving horizontally and parallel to the midsagittal plane at the specified velocity.

(5) Guide the probe during impact so that it moves with no significant lateral, vertical, or rotational movement.

[38 FR 20451, Aug. 1, 1973, as amended at 42 FR 7153, Feb. 7, 1977]

§ 572.11 Test conditions and instrumentation.

(a) The test probe used for thoracic and knee impact tests is a cylinder 6 inches in diameter that weighs 51.5 pounds including instrumentation. Its impacting end has a flat right face that is rigid and that has an edge radius of 0.5 inches.

(b) Accelerometers are mounted in the head on the horizontal transverse bulkhead shown in the drawings subreferenced under assembly No. SA 150 M010 in Figure 1, so that their sensitive axes intersect at a point in the midsagittal plane 0.5 inches above the horizontal bulkhead and 1.9 inches ventral of the vertical mating surface of the skull with the skull cover. One accelerometer is aligned with its sensitive axis perpendicular to the horizontal bulkhead in the midsagittal plane and with its seismic mass center at any distance up to 0.3 inches superior to the axial intersection point. Another accelerometer is aligned with its sensitive axis parallel to the horizontal bulkhead and perpendicular to the midsagittal plane, and with its seismic mass center at any distance up to 1.3 inches to the left of the axial intersection point (left side of dummy is the same as that of man). A third accelerometer is aligned with its sensitive axis parallel to the horizontal bulkhead in the midsagittal plane, and with its seismic mass center at any distance up to 1.3 inches dorsal to the axial intersection point.

(c) Accelerometers are mounted in the thorax by means of a bracket attached to the rear vertical surface (hereafter ''attachment surface'') of the thoracic spine so that their sensitive axes intersect at a point in the midsagittal plane 0.8 inches below the upper surface of the plate to which the neck mounting bracket is attached and 3.2 inches perpendicularly forward of the surface to which the accelerometer bracket is attached. One accelerometer has its sensitive axis oriented parallel to the attachment surface in the midsagittal plane, with its seismic mass center at any distance up to 1.3 inches inferior to the intersection of the sensitive axes specified above. Another accelerometer has its sensitive axis oriented parallel to the attachment surface and perpendicular to the midsagittal plane, with its seismic mass center at any distance up to 0.2 inches to the right of the intersection of the sensitive axes specified above. A third accelerometer has its sensitive axis oriented perpendicular to the attachment surface in the midsagittal plane, with its seismic mass center at any distance up to 1.3 inches dorsal to the intersection of the sensitive axes specified above. Accelerometers are oriented with the dummy in the position specified in § 572.11(i).

(d) A force-sensing device is mounted axially in each femur shaft so that the transverse centerline of the sensing element is 4.25 inches from the knee's center of rotation.

(e) The outputs of acceleration and force-sensing devices installed in the dummy and in the test apparatus specified by this part are recorded in individual data channels that conform to the requirements of SAE Recommended Practice J211a, December 1971, with channel classes as follows:

(1) Head acceleration—Class 1000.

(2) Pendulum acceleration—Class 60.

(3) Thorax acceleration—Class 180.

(4) Thorax compression—Class 180.

(5) Femur force—Class 600.

(f) The mountings for sensing devices have no resonance frequency within a range of 3 times the frequency range of the applicable channel class.

(g) Limb joints are set at 1g, barely restraining the weight of the limb when it is extended horizontally. The force required to move a limb segment does not exceed 2g throughout the range of limb motion.

(h) Performance tests are conducted at any temperature from 66 °F to 78 °F and at any relative humidity from 10 percent to 70 percent after exposure of the dummy to these conditions for a period of not less than 4 hours.

(i) For the performance tests specified in §§ 572.8, 572.9, and 572.10, the dummy is positioned in accordance with Figure 11 as follows:

(1) The dummy is placed on a flat, rigid, smooth, clean, dry, horizontal, steel test surface whose length and width dimensions are not less than 16 inches, so that the dummy's midsagittal plane is vertical and centered on the test surface and the rearmost points on its lower legs at the level of the test surface are at any distance not less than 5 inches and not more than 6 inches forward of the forward edge of the test surface.

(2) The pelvis is adjusted so that the upper surface of the lumbar-pelvic adapter is horizontal.

(3) The shoulder yokes are adjusted so that they are at the midpoint of their anterior-posterior travel with their upper surfaces horizontal.

(4) The dummy is adjusted so that the rear surfaces of the shoulders and buttocks are tangent to a transverse vertical plane.

(5) The upper legs are positioned symmetrically about the midsagittal plane so that the distance between the knee pivot bolt heads is 11.6 inches.

(6) The lower legs are positioned in planes parallel to the midsagittal plane so that the lines between the midpoint of the knee pivots and the ankle pivots are vertical.

(j) The dummy's dimensions, as specified in drawing number SA 150 M002, are determined as follows:

(1) With the dummy seated as specified in paragraph (i) of this section, the head is adjusted and secured so that its occiput is 1.7 inches forward of the transverse vertical plane with the vertical mating surface of the skull with its cover parallel to the transverse vertical plane.

(2) The thorax is adjusted and secured so that the rear surface of the chest accelerometer mounting cavity is inclined 3° forward of vertical.

(3) Chest and waist circumference and chest depth measurements are taken with the dummy positioned in accordance with paragraphs (j) (1) and (2) of this section.

(4) The chest skin and abdominal sac are removed and all following measurements are made without them.

(5) Seated height is measured from the seating surface to the uppermost point on the head-skin surface.

(6) Shoulder pivot height is measured from the seating surface to the center of the arm elevation pivot.

(7) H-point locations are measured from the seating surface to the center of the holes in the pelvis flesh covering in line with the hip motion ball.

(8) Knee pivot distance from the backline is measured to the center of the knee pivot bolt head.

(9) Knee pivot distance from floor is measured from the center of the knee pivot bolt head to the bottom of the heel when the foot is horizontal and pointing forward.

(10) Shoulder width measurement is taken at arm elevation pivot center height with the centerlines between the elbow pivots and the shoulder pivots vertical.

(11) Hip width measurement is taken at widest point of pelvic section.

(k) Performance tests of the same component, segment, assembly, or fully assembled dummy are separated in time by a period of not less than 30 minutes unless otherwise noted.

(l) Surfaces of dummy components are not painted except as specified in this part or in drawings subtended by this part.

FIGURE 1

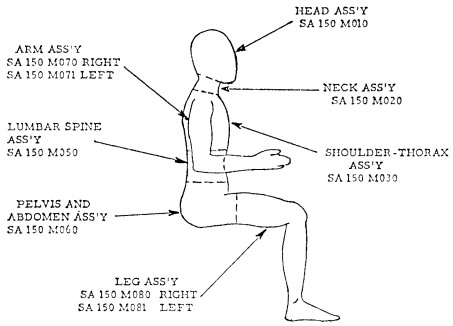

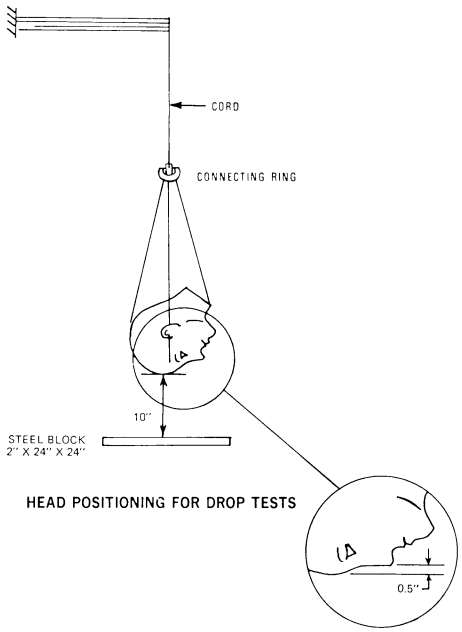

Figure 2

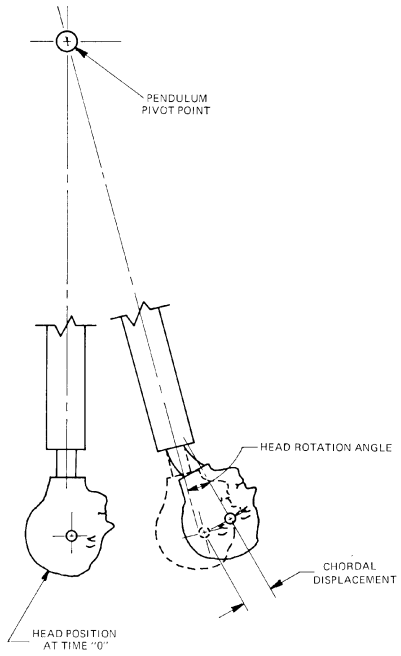

FIGURE NO. 3

NECK COMPONENT TEST

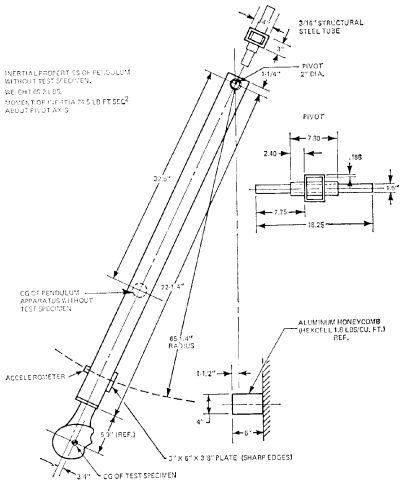

FIGURE NO. 4
NECK COMPONENT TEST

FIGURE NO. 5
LUMBAR FLEXION TEST

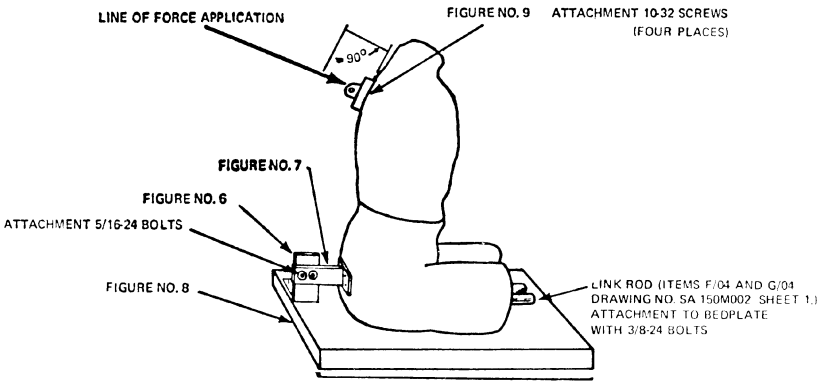

FIGURE NO. 6

SUPPORT BRACKET
LUMBAR TEST FIXTURE

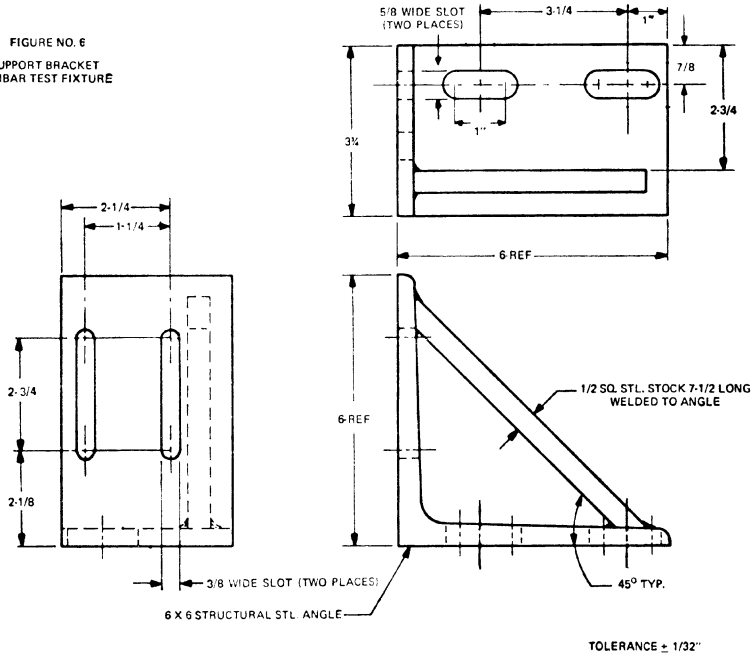

FIGURE NO. 7

MOUNTING BRACKET-LUMBAR TEST FIXTURE

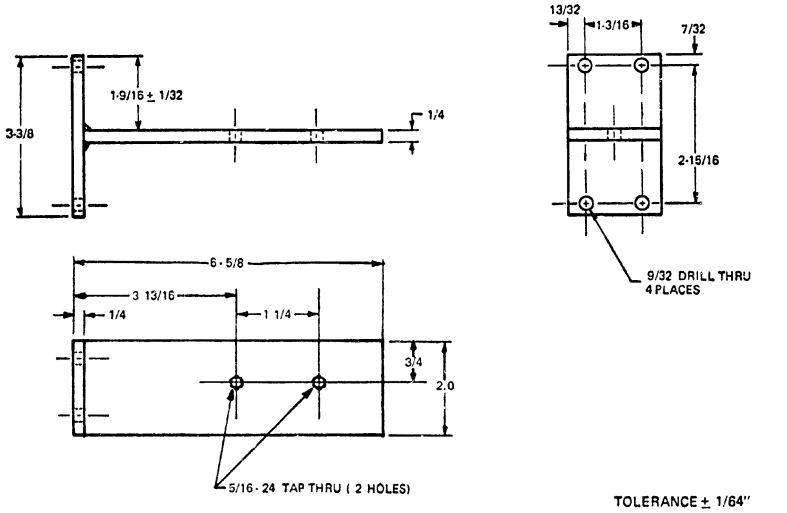

TOLERANCE ± 1/64"
MATERIAL: STEEL
WELDED CONSTRUCTION

FIGURE NO. 8

BEDPLATE - LUMBAR TEST FIXTURE

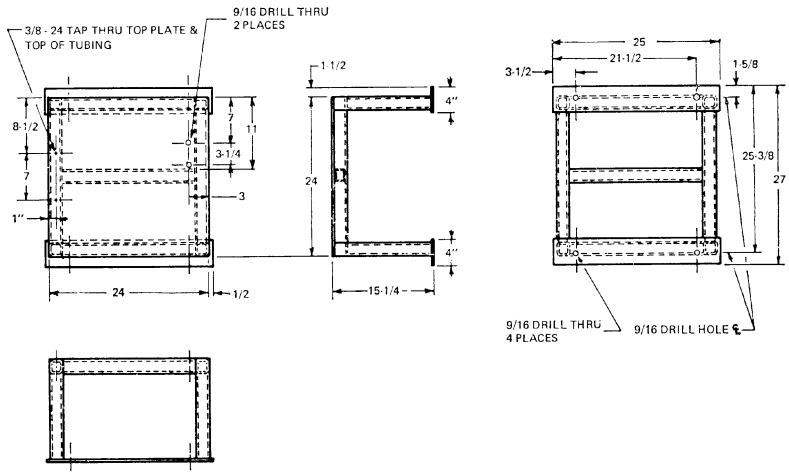

MATL: STEEL - 1/4 THICK PLATE & 2 X 2-1/4 WALL SQ. TUBING
WELDED CONSTRUCTION

TOLERANCE: ± 1/32"

FIGURE 9
Loading Plate- Lumbar Test Fixture

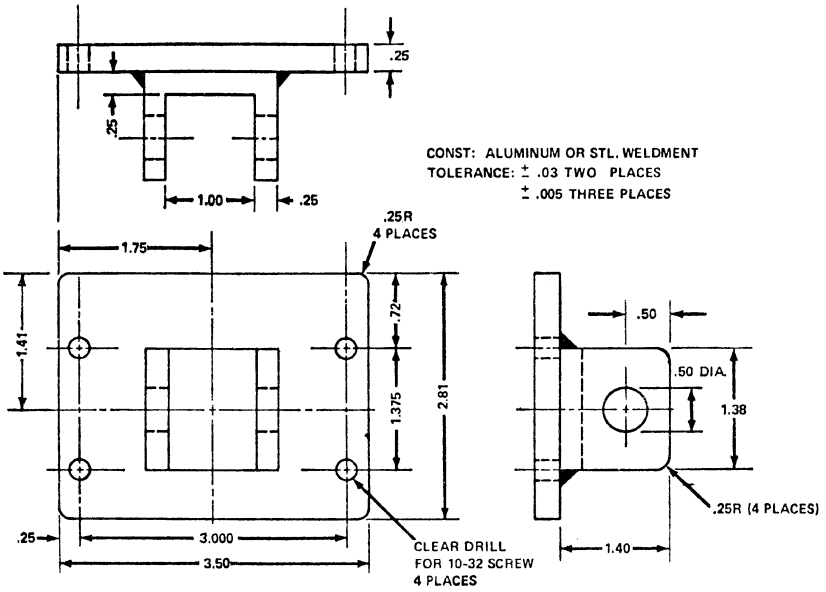

FIGURE NO. 10
ABDOMEN COMPONENT TEST

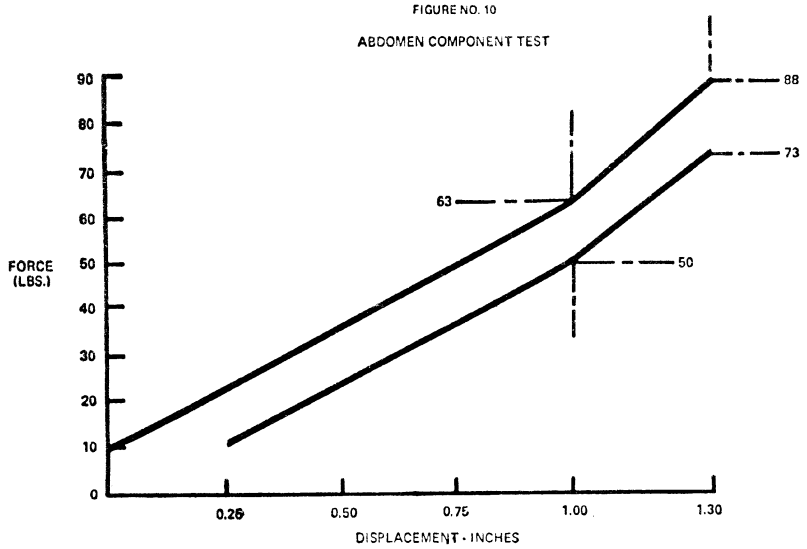

FIGURE No. 11

UPRIGHT SEATED POSITION FOR LINEAR MEASUREMENTS

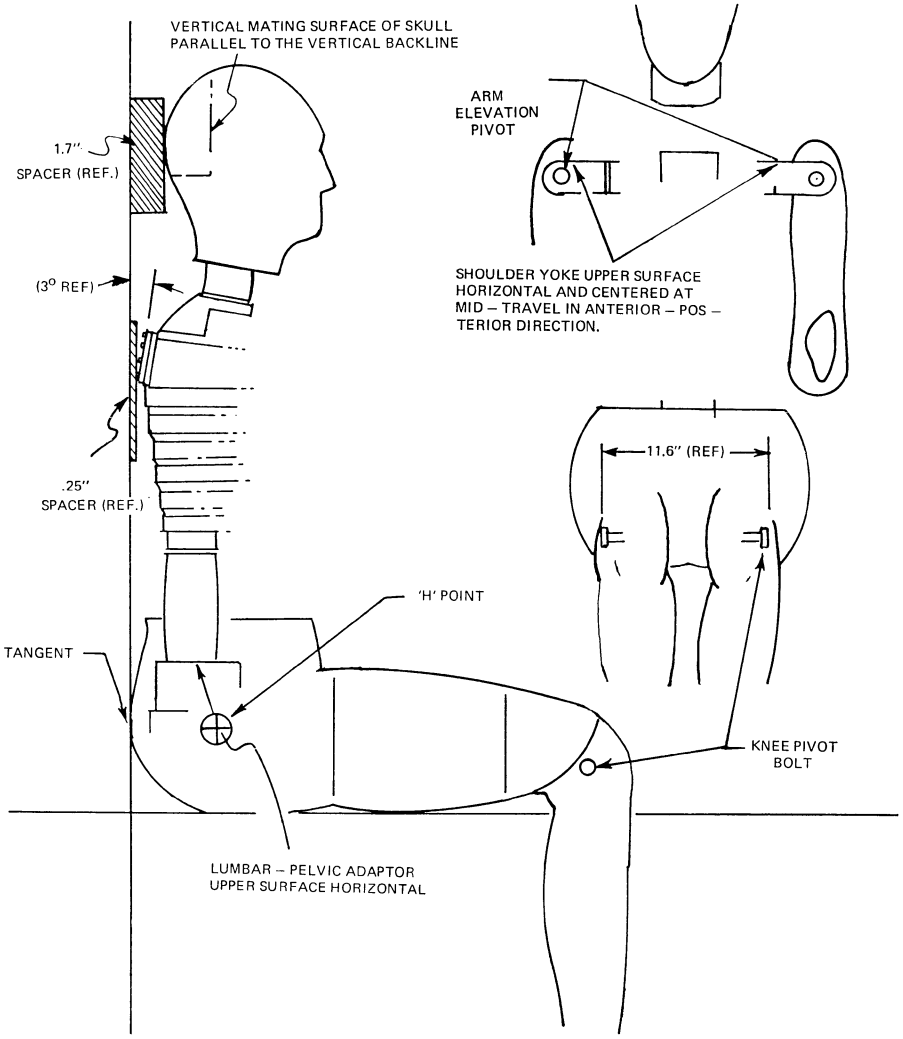

[38 FR 20451, Aug. 1, 1973, as amended at 42 FR 7153, Feb. 7, 1977]

Subpart C—3-Year-Old Child

SOURCE: 44 FR 76530, Dec. 27, 1979, unless otherwise noted.

§ 572.15 General description.

(a) The dummy consists of the component assemblies specified in drawing SA 103C 001, which are described in their entirety by means of approximately 122 drawings and specifications

and an Operation and Maintenance Manual, dated May 28, 1976. The drawings and specifications are grouped by component assemblies under the following thirteen headings:

SA 103C 010 Head Assembly
SA 103C 020 Neck Assembly
SA 103C 030 Torso Assembly
SA 103C 041 Upper Arm Assembly Left
SA 103C 042 Upper Arm Assembly Right
SA 103C 051 Forearm Hand Assembly Left
SA 103C 052 Forearm Hand Assembly Right
SA 103C 061Upper Leg Assembly Left
SA 103C 062 Upper Leg Assembly Right
SA 103C 071 Lower Leg Assembly Left
SA 103C 072 Lower Leg Assembly Right
SA 103C 081 Foot Assembly left
SA 103C 082 Foot Assembly Right.

(b) The drawings, specifications, and operation and maintenance manual referred to in this regulation that are not set forth in full are hereby incorporated in this part by reference. These materials are thereby made part of this regulation. The Director of the Federal Register has approved the materials incorporated by reference. For materials subject to change, only the specific version approved by the Director of the Federal Register and specified in the regulation are incorporated. A notice of any change will be published in the FEDERAL REGISTER. As a convenience to the reader, the materials incorporated by reference are listed in the Finding Aid Table found at the end of this volume of the Code of Federal Regulations.

(c) The materials incorporated by reference are available for examination in Docket 78–09, Room 5109, Docket Section, National Highway Traffic Safety Administration, 400 Seventh Street SW., Washington, DC 20590. Copies may be obtained from Rowley-Scher Reprographics, Inc., 1216 K Street NW., Washington, DC 20005 ((202) 628–6667). The materials are also on file in the reference library of the Office of the Federal Register, National Archives and Records Administration, Washington, DC.

(d) Adjacent segments are joined in a manner such that throughout the range of motion and also under simulated crash-impact conditions there is no contact between metallic elements except for contacts that exist under static conditions.

(e) The structural properties of the dummy are such that the dummy conforms to this part in every respect both before and after being used in vehicle tests specified in Standard No. 213 of this chapter (§ 571.213).

(f) The patterns of all cast and molded parts for reproduction of the molds needed in manufacturing of the dummies can be obtained on a loan basis by manufacturers of the testes dummies, or others if need is shown, from: Office of Vehicle Safety Standards, National Highway Traffic Safety Administration, 400 Seventh Street SW., Washington, DC 20590.

[50 FR 25423, June 19, 1985]

§ 572.16 Head.

(a) The head consists of the assembly designated as SA 103C 010 on drawing No. SA 103C 001, and conforms to either—

(1) Each item specified on drawing SA 103C 002(B), sheet 8; or

(2) Each item specified on drawing SA 103C 002, sheet 8.

(b) When the head is impacted by a test probe specified in § 572.21(a)(1) at 7 fps, then the peak resultant acceleration measured at the location of the accelerometer mounted in the headform according to § 572.21(b) is not less than 95g and not more than 118g.

(1) The recorded acceleration-time curve for this test is unimodal at or above the 50g level, and lies at or above that level for intervals:

(i) In the case of the head assembly specified in paragraph (a)(1) of this section, not less than 1.3 milliseconds and not more than 2.0 milliseconds;

(ii) In the case of the head assembly specified in paragraph (a)(2) of this section, not less than 2.0 milliseconds and not more than 3.0 milliseconds.

(2) The lateral acceleration vector does not exceed 7g.

(c) *Test procedure.* (1) Seat the dummy on a seating surface having a back support as specified in § 572.21(h) and orient the dummy in accordance with § 572.21(h) and adjust the joints of the limbs at any setting between 1g and 2g, which just supports the limbs' weight when the limbs are extended horizontally forward.

(2) Adjust the test probe so that its longitudinal centerline is at the forehead at the point of orthogonal intersection of the head midsagittal plane and the transverse plane which is perpendicular to the ''Z'' axis of the head (longitudinal centerline of the skull anchor) and is located 0.6 ±0.1 inches above the centers of the head center of gravity reference pins and coincides within 2 degrees with the line made by the intersection of horizontal and midsagittal planes passing through this point.

(3) Adjust the dummy so that the surface area on the forehead immediately adjacent to the projected longitudinal centerline of the test probe is vertical.

(4) Impact the head with the test probe so that at the moment of impact the probe's longitudinal centerline falls within 2 degrees of a horizontal line in the dummy's midsagittal plane.

(5) Guide the probe during impact so that it moves with no significant lateral, vertical, or rotational movement.

(6) Allow a time period of at least 20 minutes between successive tests of the head.

[44 FR 76530, Dec. 27, 1979; 45 FR 43353, June 26, 1980, as amended at 45 FR 82267, Dec. 15, 1980; 55 FR 30468, July 26, 1990]

§ 572.17 Neck.

(a)(1) The neck for use with the head assembly described in § 572.16(a)(1) consists of the assembly designated as SA 103C 020 on drawing No. SA 103C 001, conforms to each item specified on drawing No. SA 103C 002(B), sheet 9.

(2) The neck for use with the head assembly described in § 572.16(a)(2) consists of the assembly designated as SA 103C 020 on drawing No. SA 103C 001, and conforms to each item specified on drawing No. SA 103C 002, sheet 9.

(b) When the head-neck assembly is tested in accordance with paragraph (c) of this section, the head shall rotate in reference to the pendulum's longitudinal centerline a total of 84 degrees ± 8 degrees about its center of gravity, rotating to the extent specified in the following table at each indicated point in time, measured from impact, with the chordal displacement measured at its center of gravity. The chordal displacement at time T is defined as the straight line distance between (1) the position relative to the pendulum arm of the head center of gravity at time zero, and (2) the position relative to the pendulum arm of the head center of gravity at time T as illustrated by figure 3. The peak resultant acceleration recorded at the location of the accelerometers mounted in the headform in accordance with § 572.21(b) shall not exceed 30g. The pendulum shall not reverse direction until the head's center of gravity returns to the original zero time position relative to the pendulum arm.

Rotation (degrees)	Time (ms) ±(2+.08T)	Chordal displacement (inches ±0.8)
0	0	0
30	21	2.2
60	36	4.3
Maximum	62	5.8
60	91	4.3
30	108	2.2
0	123	0

(c) *Test procedure.* (1) Mount the head and neck on a rigid pendulum as specified in Figure 4, so that the head's midsagittal plane is vertical and coincides with the plane of motion of the pendulum's longitudinal centerline. Mount the neck directly to the pendulum as shown in Figure 15.

(2) Release the pendulum and allow it to fall freely from a height such that the velocity at impact is 17.00 ±1.0 feet per second (fps), measured at the center of the accelerometer specified in figure 4.

(3) Decelerate the pendulum to a stop with an acceleration-time pulse described as follows:

(i) Establish 5g and 20g levels on the a-t curve.

(ii) Establish t_1 at the point where the a-t curve first crosses the 5g level, t_2 at the point where the rising a-t curve first crosses the 20g level, t_3 at the point where the decaying a-t curve last crosses the 20g level, and t_4 at the point where the decaying a-t curve first crosses the 5g level.

(iii) t_2–t_1, shall be not more than 4 milliseconds.

(iv) t_3–t_2, shall be not less than 18 and not more than 21 milliseconds.

(v) t_4–t_3, shall be not more than 5 milliseconds.

(vi) The average deceleration between t_2 and t_3 shall be not less than 20g and not more then 34g.

(4) Allow the neck to flex without contact of the head or neck with any object other than the pendulum arm.

(5) Allow a time period of at least 1 hour between successive tests of the head and neck.

[44 FR 76530, Dec. 27, 1979; 45 FR 43353, June 26, 1980, as amended at 55 FR 30468, July 26, 1990]

§ 572.18 Thorax.

(a) The thorax consists of the part of the torso shown in assembly drawing SA 103C 001 by number SA 103C 030 and conforms to each of the applicable drawings listed under this number on drawing SA 103C 002, sheets 10 and 11.

(b) When impacted by a test probe conforming to § 572.21(a) at 13 fps in accordance with paragraph (c) of this section, the peak resultant accelerations at the location of the accelerometers mounted in the chest cavity in accordance with § 572.21(c) shall be not less than 50g and not more than 70g. The acceleration-time curve for the test shall be unimodal at or above the 30g level and shall lie at or above the 30g level for an interval not less than 2.5 milliseconds and not more than 4.0 milliseconds. The lateral acceleration shall not exceed 5g.

(c) *Test procedure.* (1) With the dummy seated without back support on a surface as specified in § 572.21(h) and oriented as specified in § 572.21(h), adjust the dummy arms and legs until they are extended horizontally forward parallel to the midsagittal plane. The joints of the limbs are adjusted at any setting between 1g and 2g, which just supports the limbs' weight when the limbs are extended horizontally forward.

(2) Establish the impact point at the chest midsagittal plane so that it is 1.5 inches below the longitudinal centerline of the bolt that attaches the top of the ribcage sternum to the thoracic spine box.

(3) Adjust the dummy so that the tangent plane at the surface on the thorax immediately adjacent to the designated impact point is vertical and parallel to the face of the test probe.

(4) Place the longitudinal centerline of the test probe to coincide with the designated impact point and align the test probe so that at impact its longitudinal centerline coincides within 2 degrees with the line formed by intersection of the horizontal and midsagittal planes passing through the designated impact point.

(5) Impact the thorax with the test probe so that at the moment of impact the probe's longitudinal centerline falls within 2 degrees of a horizontal line in the dummy midsagittal plane.

(6) Guide the probe during impact so that it moves with no significant lateral, vertical or rotational movement.

(7) Allow a time period of at least 20 minutes between successive tests of the chest.

§ 572.19 Lumbar spine, abdomen and pelvis.

(a) The lumbar spine, abdomen, and pelvis consist of the part of the torso assembly shown by number SA 103C 030 on drawing SA 103C 001 and conform to each of the applicable drawings listed under this number on drawing SA 103C 002, sheets 10 and 11.

(b) When subjected to continuously applied force in accordance with paragraph (c) of this section, the lumbar spine assembly shall flex by an amount that permits the rigid thoracic spine to rotate from its initial position in accordance with Figure 18 of this subpart by 40 degrees at a force level of not less than 34 pounds and not more than 47 pounds, and straighten upon removal of the force to within 5 degrees of its initial position.

(c) *Test procedure.* (1) The dummy with lower legs removed is positioned in an upright seated position on a seat as indicated in Figure 18, ensuring that all dummy component surfaces are clean, dry and untreated unless otherwise specified.

(2) Attach the pelvis to the seating surface by a bolt C/328, modified as shown in Figure 18, and the upper legs at the knee axial rotation joints by the attachments shown in Figure 18. Tighten the mountings so that the pelvis-lumbar joining surface is horizontal and adjust the femur ball-flange screws at each hip socket joint to 50 inch pounds torque. Remove the head and

the neck and install a cylindrical aluminum adapter 2.0 inches in diameter and 2.80 inches long in place of the neck.

(3) Flex the thorax forward 50 degrees and then rearward as necessary to return to its initial position in accordance with Figure 18 unsupported by external means.

(4) Apply a forward pull force in the midsagittal plane at the top of the neck adapter, so that at 40 degrees of the lumbar spine flexion the applied force is perpendicular to the thoracic spine box. Apply the force at any torso deflection rate between 0.5 and 1.5 degrees per second up to 40 degrees of flexion but no further; continue to apply for 10 seconds the force necessary to maintain 40 degrees of flexion, and record the highest applied force at that time. Release all force as rapidly as possible and measure the return angle 3 minutes after the release.

§ 572.20 Limbs.

The limbs consist of the assemblies shown on drawing SA 103C 001 as Nos. SA 103C 041, SA 103C 042, SA 103C 051, SA 103C 052, SA 103C 061, SA 103C 062, SA 103C 071, SA 103C 072, SA 103C 081, SA 103C 082, and conform to each of the applicable drawings listed under their respective numbers of the drawing SA 103C 002, sheets 12 through 21.

§ 572.21 Test conditions and instrumentation.

(a)(1) The test probe used for head and thoracic impact tests is a cylinder 3 inches in diameter, 13.8 inches long, and weighing 10 lbs., 6 ozs. Its impacting end has a flat right face that is rigid and that has an edge radius of 0.5 inches.

(2) The head and thorax assembly may be instrumented with a Type A or Type C accelerometer.

(i) Type A accelerometer is defined in drawing SA–572 S1.

(ii) Type C accelerometer is defined in drawing SA–572 S2.

(b) *Head accelerometers.* Install one of the triaxial accelerometers specified in § 572.21(a)(2) on a mounting block located on the horizontal transverse bulkhead as shown in the drawings subreferenced under assembly SA 103C 010 so that the seismic mass centers of each sensing element are positioned as specified in this paragraph, relative to the head accelerometer reference point located at the intersection of a line connecting the longitudinal centerlines of the transfer pins in the side of the dummy head with the midsagittal plane of the dummy head.

(1) The sensing elements of the Type C triaxial accelerometer are aligned as follows:

(i) Align one sensitive axis parallel to the vertical bulkhead and coincident with the midsagittal plane, with the seismic mass center located 0.2 inches dorsal to, and 0.1 inches inferior to the head accelerometer reference point.

(ii) Align the second sensitive axis with the horizontal plane, perpendicular to the midsagittal plane, with the seismic mass center located 0.1 inches inferior, 0.4 inches to the right of, and 0.9 inches dorsal to the head accelerometer reference point.

(iii) Align the third sensitive axis so that it is parallel to the midsagittal and horizontal planes, with the seismic mass center located 0.1 inches inferior to, 0.6 inches dorsal to, and 0.4 inches to the right of the head accelerometer reference point.

(iv) All seismic mass centers are positioned with ±0.05 inches of the specified locations.

(2) The sensing elements of the Type A triaxial accelerometer are aligned as follows:

(i) Align one sensitive axis parallel to the vertical bulkhead and coincident with midsagittal planes, with the seismic mass center located from 0.2 to 0.47 inches dorsal to, from 0.01 inches inferior to 0.21 inches superior, and from 0.0 to 0.17 inches left of the head accelerometer reference point.

(ii) Align the second sensitive axis with the horizontal plane, perpendicular to the midsagittal plane, with the seismic mass center located 0.1 to 0.13 inches inferior to, 0.17 to 0.4 inches to the right of, and 0.47 to 0.9 inches dorsal of the head accelerometer reference point.

(iii) Align the third sensitive axis so that it is parallel to the midsagittal and horizontal planes, with the seismic mass center located 0.1 to 0.13 inches inferior to, 0.6 to 0.81 inches dorsal to, and from 0.17 inches left to 0.4 inches

right of the head accelerometer reference point.

(c) *Thorax accelerometers.* Install one of the triaxial accelerometers specified in § 572.21(a)(2) on a mounting plate attached to the vertical transverse bulkhead shown in the drawing subreferenced under assembly No. SA 103C 030 in drawing SA 103C 001, so that the seismic mass centers of each sensing element are positioned as specified in this paragraph, relative to the thorax accelerometer reference point located in the midsagital plane 3 inches above the top surface of the lumbar spine, and 0.3 inches dorsal to the accelerometer mounting plate surface.

(1) The sensing elements of the Type C triaxial accelerometer are aligned as follows:

(i) Align one sensitive axis parallel to the vertical bulkhead and midsagittal planes, with the seismic mass center located 0.2 inches to the left of, 0.1 inches inferior to, and 0.2 inches ventral to the thorax accelerometer reference point.

(ii) Align the second sensitive axis so that it is in the horizontal transverse plane, and perpendicular to the midsagittal plane, with the seismic mass center located 0.2 inches to the right of, 0.1 inches inferior to, and 0.2 inches ventral to the thorax accelerometer reference point.

(iii) Align the third sensitive axis so that it is parallel to the midsagittal and horizontal planes, with the seismic mass center located 0.2 inches superior to, 0.5 inches to the right of, and 0.1 inches ventral to the thorax accelerometer reference points.

(iv) All seismic mass centers shall be positioned within ±0.05 inches of the specified locations.

(2) The sensing elements of the Type A triaxial accelerometer are aligned as follows:

(i) Align one sensitive axis parallel to the vertical bulkhead and midsagittal planes, with the seismic mass center located from 0.2 inches left to 0.28 inches right, from 0.5 to 0.15 inches inferior to, and from 0.15 to 0.25 inches ventral of the thorax accelerometer reference point.

(ii) Align the second sensitive axis so that it is in the horizontal transverse plane and perpendicular to the midsagital plane, with the seismic mass center located from 0.06 inches left to 0.2 inches right of, from 0.1 inches inferior to 0.24 inches superior, and 0.15 to 0.25 inches ventral to the thorax accelerometer reference point.

(iii) Align the third sensitive axis so that it is parallel to the midsagital and horizontal planes, with the seismic mass center located 0.15 to 0.25 inches superior to, 0.28 to 0.5 inches to the right of, and from 0.1 inches ventral to 0.19 inches dorsal to the thorax accelerometer reference point.

(d) The outputs of accelerometers installed in the dummy, and of test apparatus specified by this part, are recorded in individual data channels that conform to the requirements of SAE Recommended Practice J211a, December 1971, with channel classes as follows:

(1) Head acceleration—Class 1000.

(2) Pendulum acceleration—Class 60.

(3) Thorax acceleration—Class 180.

(e) The mountings for accelerometers have no resonance frequency less than cut-off 3 times the cut-off frequency of the applicable channel class.

(f) Limb joints are set at the force between 1–2*g*, which just supports the limbs' weight when the limbs are extended horizontally forward. The force required to move a limb segment does not exceed 2*g* throughout the range of limb motion.

(g) Performance tests are conducted at any temperature from 66 °F to 78 °F and at any relative humidity from 10 percent to 70 percent after exposure of the dummy to these conditions for a period of not less than 4 hours.

(h) For the performance tests specified in §§ 572.16, 572.18, and 572.19, the dummy is positioned in accordance with Figures 16, 17, and 18 as follows:

(1) The dummy is placed on a flat, rigid, clean, dry, horizontal surface of teflon sheeting with a smoothness of 40 microinches and whose length and width dimensions are not less than 16 inches, so that the dummy's midsagittal plane is vertical and centered on the test surface. For head tests, the seat has a vertical back support whose top is 12.4 ±0.2 inches above the seating surface. The rear surfaces of the dummy's shoulders and buttocks are touching the back support as

shown in Figure 16. For thorax and lumbar spine tests, the seating surface is without the back support as shown in Figures 17 and 18, respectively.

(2) The shoulder yokes are adjusted so that they are at the midpoint of their anterior-posterior travel with their upper surfaces horizontal.

(3) The dummy is adjusted for head impact and lumbar flexion tests so that the rear surfaces of the shoulders and buttocks are tangent to a transverse vertical plane.

(4) The arms and legs are positioned so that their centerlines are in planes parallel to the midsagittal plane.

(i) The dummy's dimensions are specified in drawings No. SA 103C 002, sheets 22 through 26.

(j) Performance tests of the same component, segment, assembly or fully assembled dummy are separated in time by a period of not less than 20 minutes unless otherwise specified.

(k) Surfaces of the dummy components are not painted except as specified in this part or in drawings subtended by this part.

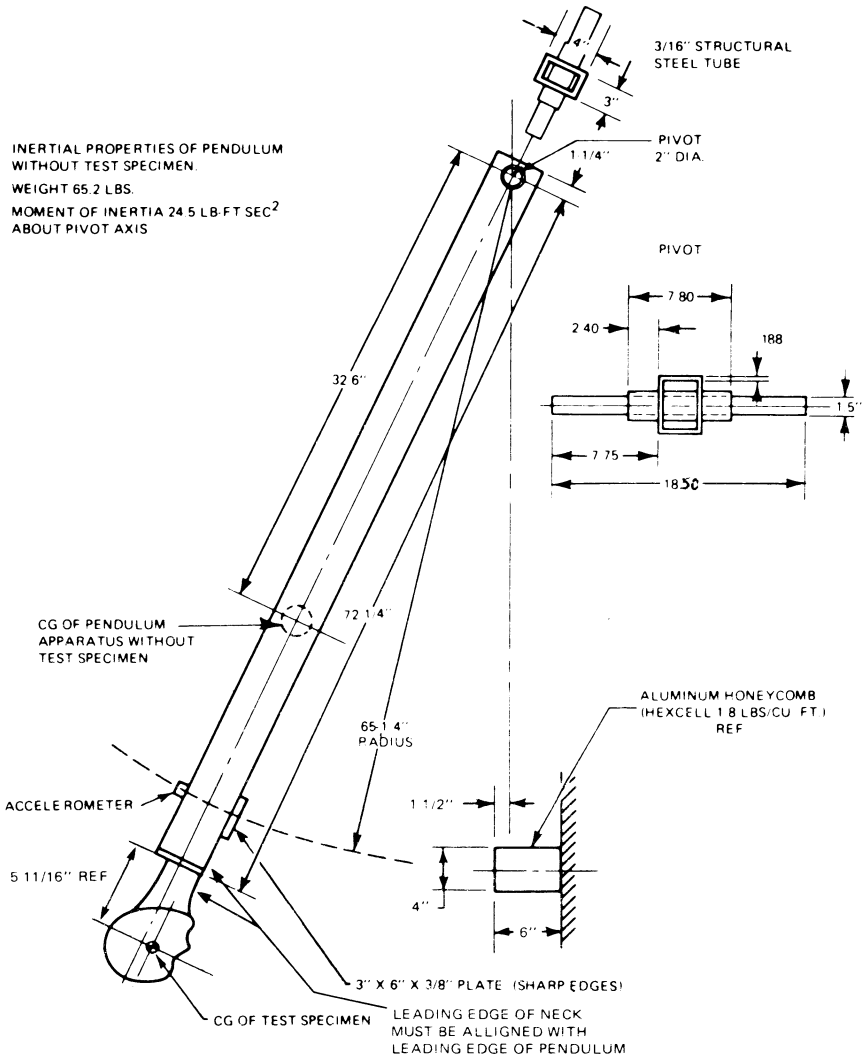

FIGURE NO. 15
NECK COMPONENT TEST

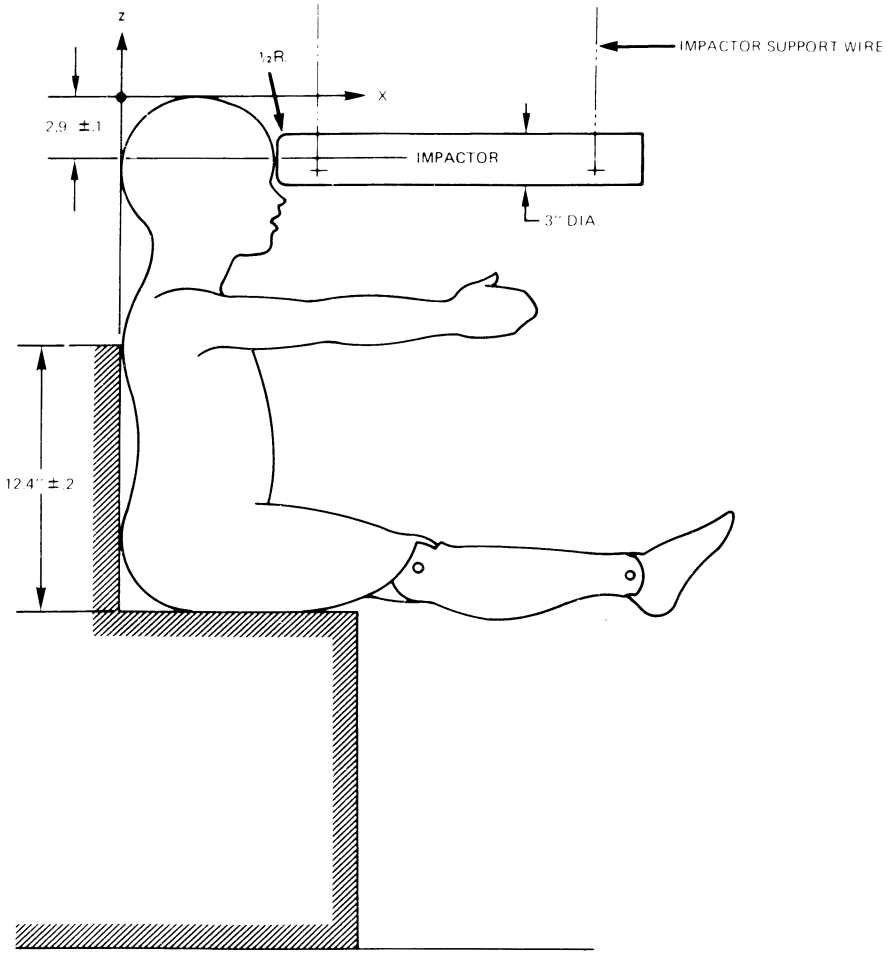

FIGURE NO. 16
HEAD IMPACT TEST

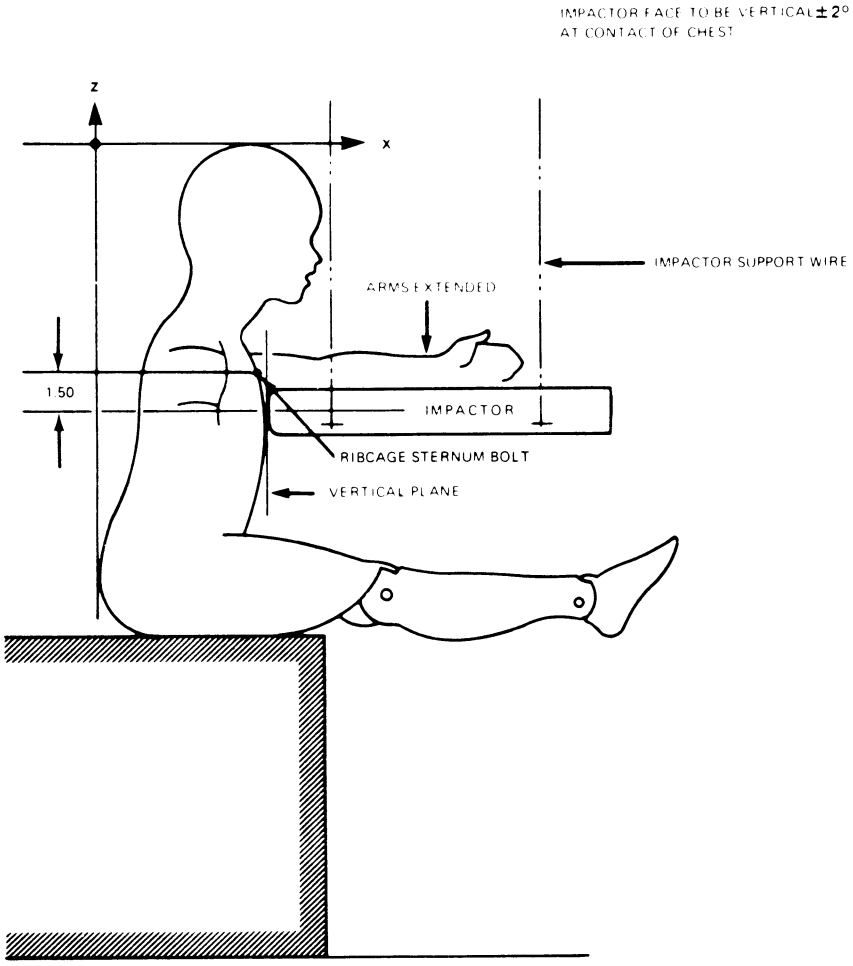

FIGURE NO. 17
CHEST IMPACT TEST

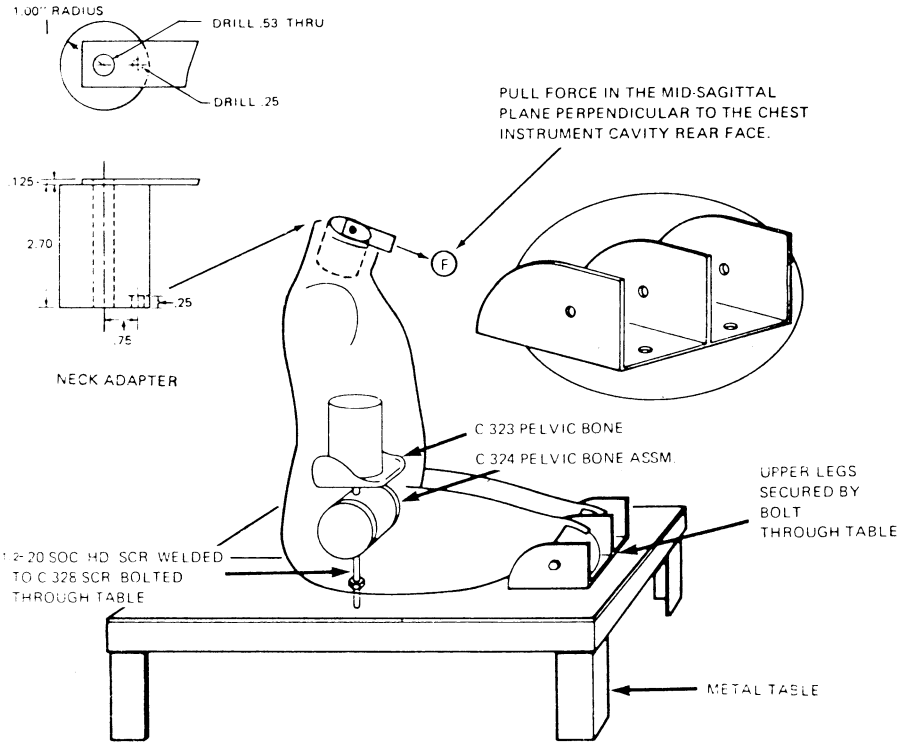

FIGURE NO. 18

LUMBAR SPINE FLEXION TEST

[44 FR 76530, Dec. 27, 1979, as amended at 45 FR 82267, Dec. 15, 1980; 55 FR 30468, July 26, 1990]

Subpart D—6-Month-Old Infant

§ 572.25 General description.

(a) The infant dummy is specified in its entirety by means of 5 drawings (No. SA 1001) and a construction manual, dated July 2, 1974, which describe in detail the materials and the procedures involved in the manufacturing of this dummy.

(b) The drawings, specifications, and construction manual referred to in this regulation that are not set forth in full are hereby incorporated in this part by reference. These materials are thereby

made part of this regulation. The Director of the Federal Register has approved the materials incorporated by reference. For materials subject to change, only the specific version approved by the Director of the Federal Register and specified in the regulation are incorporated. A notice of any change will be published in the FEDERAL REGISTER. As a convenience to the reader, the materials incorporated by reference are listed in the Finding Aid Table found at the end of this volume of the Code of Federal Regulations.

(c) The materials incorporated by reference are available for examination in Docket 78–09, Room 5109, Docket Section, National Highway Traffic Safety Administration, 400 Seventh Street SW., Washington, DC, 20590. Copies may be obtained from Rowley-Scher Reprographics, Inc., 1216 K Street NW., Washington, DC 20005 ((202) 628–6667). The materials are also on file in the reference library of the Office of the Federal Register, National Archives and Records Administration, Washington, DC.

(d) The structural properties of the dummy are such that the dummy conforms to this part in every respect both before and after being used in vehicle tests specified in Standard No. 213 of this chapter (§ 571.213).

[50 FR 25424, June 19, 1985]

Subpart E—Hybrid III Test Dummy

SOURCE: 51 FR 26701, July 25, 1986, unless otherwise noted.

§ 572.30 Incorporated materials.

(a) The drawings and specifications referred to in this regulation that are not set forth in full are hereby incorporated in this part by reference. The Director of the Federal Register has approved the materials incorporated by reference. For materials subject to change, only the specific version approved by the Director of the Federal Register and specified in the regulation are incorporated. A notice of any change will be published in the FEDERAL REGISTER. As a convenience to the reader, the materials incorporated by reference are listed in the Finding Aid Table found at the end of this volume of the Code of Federal Regulations.

(b) The materials incorporated by reference are available for examination in the general reference section of docket 74–14, Docket Section, National Highway Traffic Safety Administration, Room 5109, 400 Seventh Street, SW., Washington, DC 20590. Copies may be obtained from Reprographic Technologies, 9000 Virginia Manor Road, Beltsville, MD 20705, Telephone (301) 210–5600, Facsimile (301) 419–5069, Attn. Mr. Jay Wall. Drawings and specifications are also on file at the National Archives and Records Administration (NARA). For information on the availability of this material at NARA, call 202–741–6030, or go to: *http://www.archives.gov/federal_register/code_of_federal_regulations/ibr_locations.html.*

[51 FR 26701, July 25, 1986, as amended at 61 FR 67955, Dec. 26, 1996]

§ 572.31 General description.

(a) The Hybrid III 50th percentile size dummy consists of components and assemblies specified in the Anthropomorphic Test Dummy drawing and specifications package which consists of the following six items:

(1) The Anthropomorphic Test Dummy Parts List, dated June 26, 1998, and containing 16 pages, and a Parts List Index, dated June 26, 1998, containing 8 pages.

(2) A listing of Hybrid III Dummy Transducers-reference document AGARD-AR-330, ''Anthropomorphic Dummies for Crash and Escape System Testing'', Chapter 6, Table 6–2, North Atlantic Treaty Organization, July, 1996.

(3) A General Motors Drawing Package identified by GM Drawing No. 78051–218, revision U, titled ''Hybrid III Anthropomorphic Test Dummy,'' dated August 30, 1998, the following component assemblies, and subordinate drawings:

Drawing No.	Revision
78051–61X head assembly-complete, (May 20, 1978)	(T)
78051–90 neck assembly-complete, dated May 20, 1978	(A)

Drawing No.	Revision
78051–89 upper torso assembly-complete, dated May 20, 1978	(K)
78051–70 lower torso assembly-complete, dated June 30, 1998, except for drawing No. 78051–55, ''Instrumentation Assembly-Pelvic Accelerometer,'' dated August 2, 1979	(F)
86–5001–001 leg assembly-complete (LH), dated March 26, 1996	(A)
86–5001–002 leg assembly-complete (RH), dated March 26, 1996	(A)
78051–123 arm assembly-complete (LH), dated May 20, 1996	(D)
78051–124 arm assembly-complete (RH), dated May 20, 1978	(D)
78051–59 pelvic assembly-complete, dated June 30, 1998	(G)
78051–60 pelvic structure-molded, dated June 30, 1998	(E)

(4) Disassembly, Inspection, Assembly and Limbs Adjustment Procedures for the Hybrid III dummy, dated June 1998.

(5) Sign Convention for signal outputs—reference document SAE J1733 Information Report, titled ''Sign Convention for Vehicle Crash Testing'', dated 1994–12.

(6) Exterior dimensions of the Hybrid III dummy, dated July 15, 1986.

(b) [Reserved]

(c) Adjacent segments are joined in a manner such that throughout the range of motion and also under crash-impact conditions, there is no contact between metallic elements except for contacts that exist under static conditions.

(d) The weights, inertial properties and centers of gravity location of component assemblies shall conform to those listed in drawing 78051–338, revision S, titled ''Segment Weights, Inertial Properties, Center of Gravity Location—Hybrid III,'' dated May 20, 1978 of drawing No. 78051–218.

(e) The structural properties of the dummy are such that the dummy conforms to this part in every respect both before and after being used in vehicle test specified in Standard No. 208 of this chapter (§ 571.208).

[51 FR 26701, July 25, 1986, as amended at 53 FR 8764, Mar. 17, 1988; 57 FR 47010, Oct. 14, 1992; 61 FR 67955, Dec. 26, 1996; 62 FR 27514, May 20, 1997; 63 FR 5747, Feb. 4, 1998; 63 FR 53851, Oct. 7, 1998]

§ 572.32 Head.

(a) The head consists of the assembly shown in drawing 78051–61X, revision C, and conforms to each of the drawings subtended therein.

(b) When the head (Drawing number 78051–61X, titled ''head assembly—complete,'' dated March 28, 1997 (Revision C) with six axis neck transducer structural replacement (Drawing number 78051–383X, Revision P, titled ''Neck Transducer Structural Replacement,'' dated November 1, 1995) is dropped from a height of 14.8 inches in accordance with paragraph (c) of this section, the peak resultant accelerations at the location of the accelerometers mounted in the head in accordance with § 572.36(c) shall not be less than 225g, and not more than 275g. The acceleration/time curve for the test shall be unimodal to the extent that oscillations occurring after the main acceleration pulse are less than ten percent (zero to peak) of the main pulse. The lateral acceleration vector shall not exceed 15g (zero to peak).

(c) *Test procedure.* (1) Soak the head assembly in a test environment at any temperature between 66 degrees F to 78 degrees F and at a relative humidity from 10% to 70% for a period of at least four hours prior to its application in a test.

(2) Clean the head's skin surface and the surface of the impact plate with 1,1,1 Trichlorethane or equivalent.

(3) Suspend the head, as shown in Figure 19, so that the lowest point on the forehead is 0.5 inches below the lowest point on the dummy's nose when the midsagittal plane is vertical.

FIGURE 19

TEST SET-UP SPECIFICATIONS

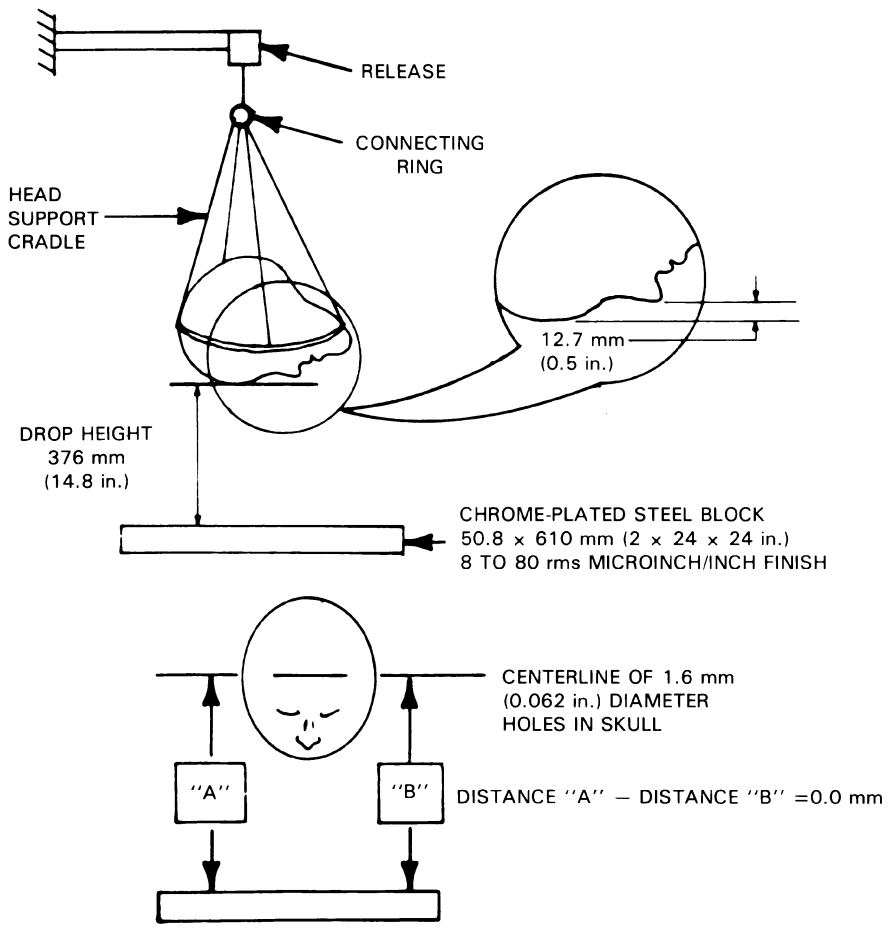

NOTE: TOLERANCE ON TEST SETUP DIMENSIONS ±1 mm (0.04 in.)

(4) Drop the head from the specified height by means that ensure instant release into a rigidly supported flat horizontal steel plate, which is 2 inches thick and 2 feet square. The plate shall have a clean, dry surface and any microfinish of not less than 8 microinches (rms) and not more than 80 microinches (rms).

(5) Allow at least 3 hours between successive tests on the same head.

[51 FR 26701, July 25, 1986, as amended at 62 FR 27514, May 20, 1997]

§ 572.33 Neck.

(a) The neck consists of the assembly shown in drawing 78051–90, revision A and conforms to each of the drawings subtended therein.

(b) When the head and neck assembly (consisting of the parts 78051–61X, revision C; –90, revision A; –84; –94; –98; –104, revision F; –303, revision E; –305; –306; –307, revision X) which has a six axis neck transducer (Drawing number C–1709, Revision D, titled ''Neck transducer,'' dated February 1, 1993.) installed in conformance with § 572.36(d), is tested in accordance with paragraph (c) of this section, it shall have the following characteristics:

(1) *Flexion.* (i) Plane D, referenced in Figure 20, shall rotate between 64 degrees and 78 degrees, which shall occur between 57 milliseconds (ms) and 64 ms from time zero. In first rebound, the rotation of Plane D shall cross 0 degrees between 113 ms and 128 ms.

(ii) The moment measured by the six axis neck transducer (drawing C–1709, revision D) about the occipital condyles, referenced in Figure 20, shall be calculated by the following formula: Moment (lbs-ft) = My − 0.058 × Fx, where My is the moment measured in lbs-ft by the ''Y'' axis moment sensor of the six axis neck transducer and Fx is the force measured in lbs by the ''X'' axis force sensor (Channel Class 600) of the six axis neck transducer. The moment shall have a maximum value between 65 lbs-ft and 80 lbs-ft occurring between 47ms and 58 ms, and the positive moment shall decay for the first time to 0 lb-ft between 97 ms and 107 ms.

(2) *Extension.* (i) Plane D, referenced in Figure 21, shall rotate between 81 degrees and 106 degrees, which shall occur between 72 ms and 82 ms from time zero. In first rebound, rotation of Plane D shall cross 0 degrees between 147 ms and 174 ms.

(ii) The moment measured by the six axis neck transducer (drawing C–1709, revision D) about the occipital condyles, referenced in Figure 21, shall be calculated by the following formula: Moment (lbs-ft) = My − 0.058 × Fx, where My is the moment measured in lbs-ft by the ''Y'' axis moment sensor of the six axis neck transducer and Fx is the force measured in lbs by the ''X'' axis force sensor (Channel Class 600) of the six axis neck transducer. The moment shall have a maximum value between—39 lbs-ft and –59 lbs-ft, occurring between 65 ms and 79 ms, and the negative moment shall decay for the first time to 0 lb-ft between 120 ms and 148 ms.

FIGURE 20

FLEXION - TEST SET-UP SPECIFICATIONS

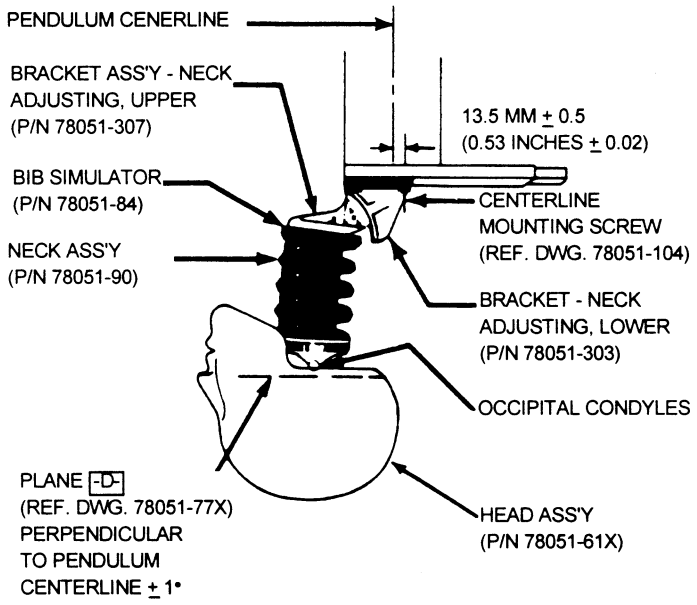

NOTE: PENDULUM SHOWN AT TIME ZERO POSITION

FIGURE 21

EXTENSION - TEST SET-UP SPECIFICATIONS

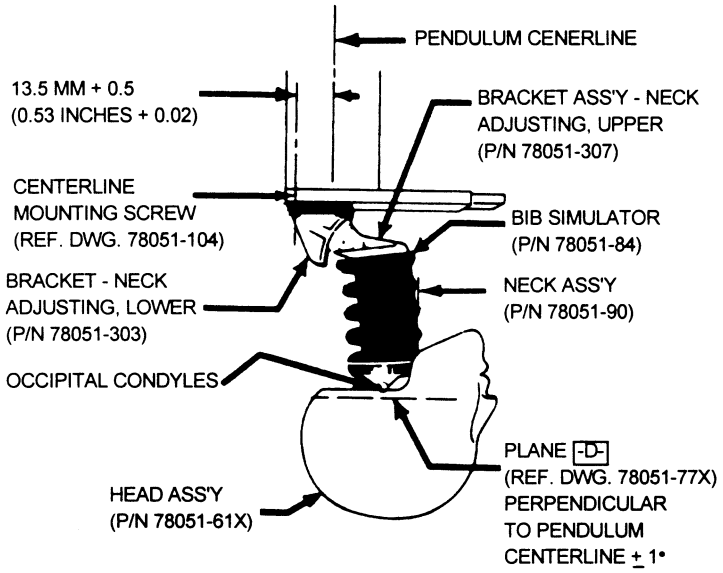

NOTE: PENDULUM SHOWN AT TIME ZERO POSITION

(c) *Test procedure.* (1) Soak the test material in a test environment at any temperature between 69 degrees F to 72 degrees F and at a relative humidity from 10% to 70% for a period of at least four hours prior to its application in a test.

(2) Torque the jamnut (78051–64) on the neck cable (78051–301, revision E) to 1.0 lbs-ft ±.2 lbs-ft.

(3) Mount the head-neck assembly, defined in paragraph (b) of this section, on a rigid pendulum as shown in Figure 22 so that the head's midsagittal plane is vertical and coincides with the plane of motion of the pendulum's longitudinal axis.

FIGURE 22

PENDULUM SPECIFICATIONS

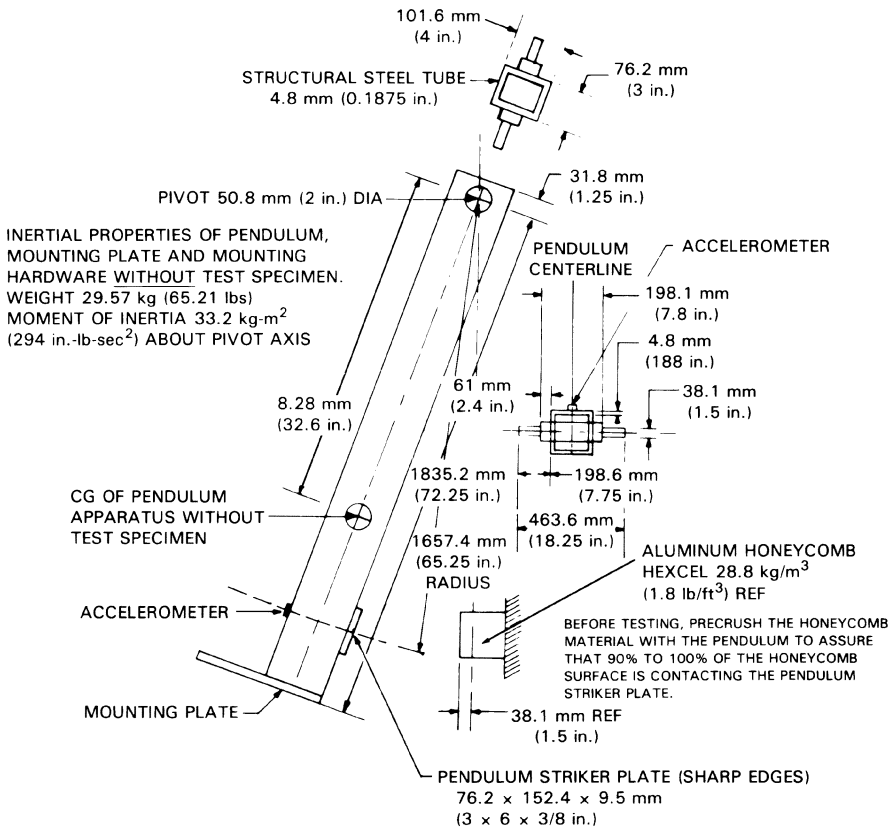

(4) Release the pendulum and allow it to fall freely from a height such that the tangential velocity at the pendulum accelerometer centerline at the instance of contact with the honeycomb is 23.0 ft/sec ±0.4 ft/sec. for flexion testing and 19.9 ft/sec. ±0.4 ft/sec. for extension testing. The pendulum deceleration vs. time pulse for flexion testing shall conform to the characteristics shown in Table A and the decaying deceleration-time curve shall first cross 5_g between 34 ms and 42 ms. The pendulum deceleration vs. time pulse for extension testing shall conform to the characteristics shown in Table B and the decaying deceleration-time curve shall cross 5g between 38 ms and 46 ms.

TABLE A—FLEXION PENDULUM DECELERATION VS. TIME PULSE

Time (ms)	Flexion deceleration level (g)
10	22.50–27.50
20	17.60–22.60
30	12.50–18.50
Any other time above 30 ms	29 maximum.

TABLE B—EXTENSION PENDULUM DECELERATION VS. TIME PULSE

Time (ms)	Extension deceleration level (g)
10	17.20–21.20
20	14.00–19.00
30	11.00–16.00
Any other time above 30 ms	22 maximum.

(5) Allow the neck to flex without impact of the head or neck with any object during the test.

[51 FR 26701, July 25, 1986, as amended at 53 FR 8765, Mar. 17, 1988; 62 FR 27514, May 20, 1997]

§ 572.34 Thorax.

(a) The thorax consists of the upper torso assembly in drawing 78051–89, revision K and shall conform to each of the drawings subtended therein.

(b) When impacted by a test probe conforming to § 572.36(a) at 22 fps ±0.40 fps in accordance with paragraph (c) of this section, the thorax of a complete dummy assembly (78051–218, revision U, without shoes, shall resist with a force of 1242.5 pounds ±82.5 pounds measured by the test probe and shall have a sternum displacement measured relative to spine of 2.68 inches ±0.18 inches. The internal hysteresis in each impact shall be more than 69% but less than 85%. The force measured is the product of pendulum mass and deceleration.

(c) *Test procedure.* (1) Soak the test dummy in an environment with a relative humidity from 10% to 70% until the temperature of the ribs of the test dummy have stabilized at a temperature between 69 degrees F and 72 degrees F.

(2) Seat the dummy without back and arm supports on a surface as shown in Figure 23, and set the angle of the pelvic bone at 13 degrees plus or minus 2 degrees, using the procedure described in S11.4.3.2 of Standard No. 208 (§ 571.208 of this chapter).

FIGURE 23

TEST SET-UP SPECIFICATIONS

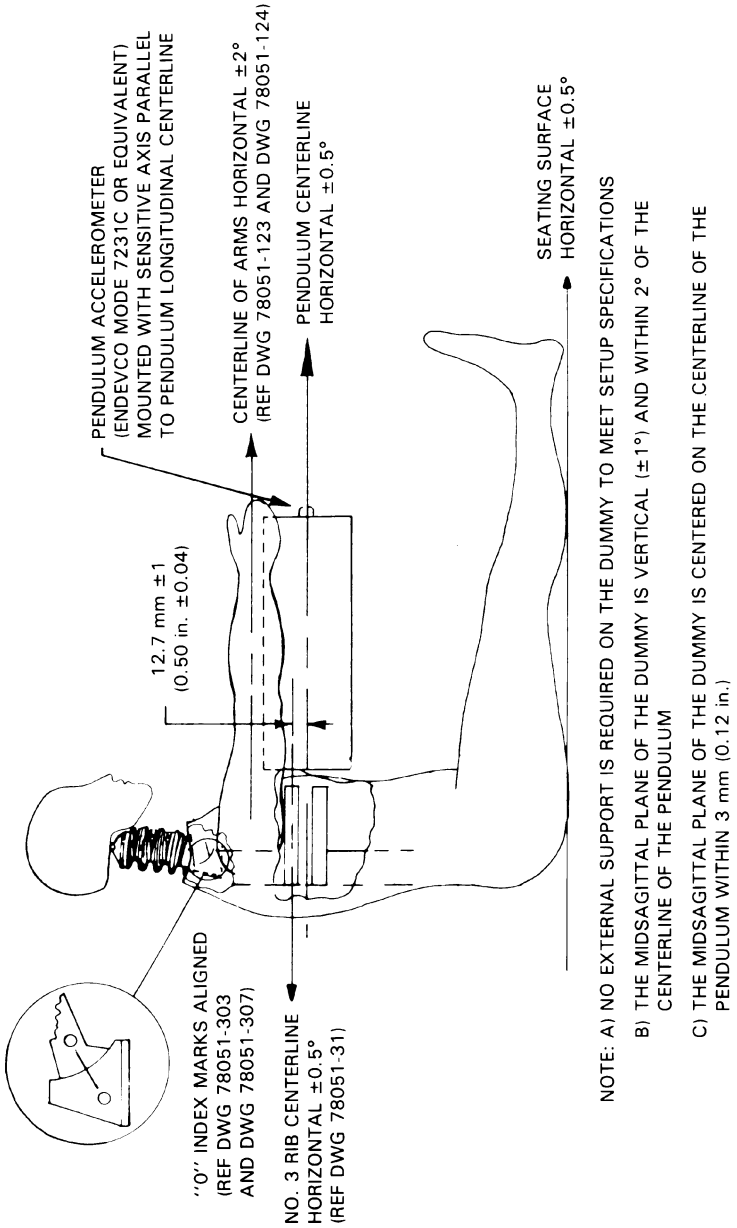

(3) Place the longitudinal centerline of the test probe so that it is .5 ±.04 in. below the horizontal centerline of the No. 3 Rib (reference drawing number 79051–64, revision A-M) as shown in Figure 23.

(4) Align the test probe specified in § 572.36(a) so that at impact its longitudinal centerline coincides within .5 degree of a horizontal line in the dummy's midsagittal plane.

(5) Impact the thorax with the test probe so that the longitudinal centerline of the test probe falls within 2 degrees of a horizontal line in the dummy midsagittal plane at the moment of impact.

(6) Guide the probe during impact so that it moves with no significant lateral, vertical, or rotational movement.

(7) Measure the horizontal deflection of the sternum relative to the thoracic spine along the line established by the longitudinal centerline of the probe at the moment of impact, using a potentiometer (ref. drawing 78051–317, revision A) mounted inside the sternum as shown in drawing 78051–89, revision I.

(8) Measure hysteresis by determining the ratio of the area between the loading and unloading portions of the force deflection curve to the area under the loading portion of the curve.

[51 FR 26701, July 25, 1986, as amended at 53 FR 8765, Mar. 17, 1988; 62 FR 27518, May 20, 1997; 63 FR 53851, Oct. 7, 1998]

§ 572.35 Limbs.

(a) The limbs consist of the following assemblies: leg assemblies 86–5001–001, revision A and –002, revision A, and arm assemblies 78051–123, revision D and –124, revision D, and shall conform to the drawings subtended therein.

(b) *Femur impact response.* (1) When each knee of the leg assemblies is impacted in accordance with paragraph (b)(2) of this section, at 6.9 ft/sec ±0.10 ft/sec by the pendulum defined in § 572.36(b), the peak knee impact force, which is a product of pendulum mass and acceleration, shall have a minimum value of not less than 1060 pounds and a maximum value of not more than 1300 pounds.

(2) *Test procedure.* (i) The test material consists of leg assemblies (86–5001–001, revision A) left and (–002, revision A) right with upper leg assemblies (78051–46) left and (78051–47) right removed. The load cell simulator (78051–319, revision A) is used to secure the knee cap assemblies (79051–16, revision B) as shown in Figure 24.

(ii) Soak the test material in a test environment at any temperature between 66 degrees F to 78 degrees F and at a relative humidity from 10% to 70% for a period of at least four hours prior to its application in a test.

(iii) Mount the test material with the leg assembly secured through the load cell simulator to a rigid surface as shown in Figure 24. No contact is permitted between the foot and any other exterior surfaces.

(iv) Place the longitudinal centerline of the test probe so that at contact with the knee it is collinear within 2 degrees with the longitudinal centerline of the femur load cell simulator.

(v) Guide the pendulum so that there is no significant lateral, vertical or rotational movement at time zero.

(vi) Impact the knee with the test probe so that the longitudinal centerline of the test probe at the instant of impact falls within .5 degrees of a horizontal line parallel to the femur load cell simulator at time zero.

(vii) Time zero is defined as the time of contact between the test probe and the knee.

(c) *Hip joint-femur flexion.* (1) When each femur is rotated in the flexion direction in accordance with paragraph (c)(2) of this section, the femur torque at 30 deg. rotation from its initial horizontal orientation will not be more than 70 ft-lbf, and at 150 ft-lbf of torque will not be less than 40 deg. or more than 50 deg.

(2) Test procedure. (i) The test material consists of the assembled dummy, part No. 78051–218 (revision S) except that (1) leg assemblies (86–5001–001 and 002) are separated from the dummy by removing the 3/8–16 Socket Head Cap Screw (SHCS) (78051–99) but retaining the structural assembly of the upper legs (78051–43 and –44), (2) the abdominal insert (78051–52) is removed and (3) the instrument cover plate (78051–13) in the pelvic bone is replaced by a rigid pelvic bone stabilizer insert (Figure 25a) and firmly secured.

(ii) Seat the dummy on a rigid seat fixture (Figure 25) and firmly secure it to the seat back by bolting the stabilizer insert and the rigid support device (Figure 25b) to the seat back of the test fixture (Figures 26 and 27) while

maintaining the pelvis (78051–58) ''B'' plane horizontal.

(iii) Insert a lever arm into the femur shaft opening of the upper leg structure assembly (78051–43/44) and firmly secure it using the 3/8–16 socket head cap screws.

(iv) Lift the lever arm parallel to the midsagittal plane at a rotation rate of 5 to 10 deg. per second while maintaining the 1/2 in. shoulder bolt longitudinal centerline horizontal throughout the range of motion until the 150 ft-lbf torque level is reached. Record the torque and angle of rotation of the femur.

(v) Operating environment and temperature are the same as specified in paragraph (b)(2)(ii) of this section.

FIGURE 24

TEST SET-UP SPECIFICATIONS

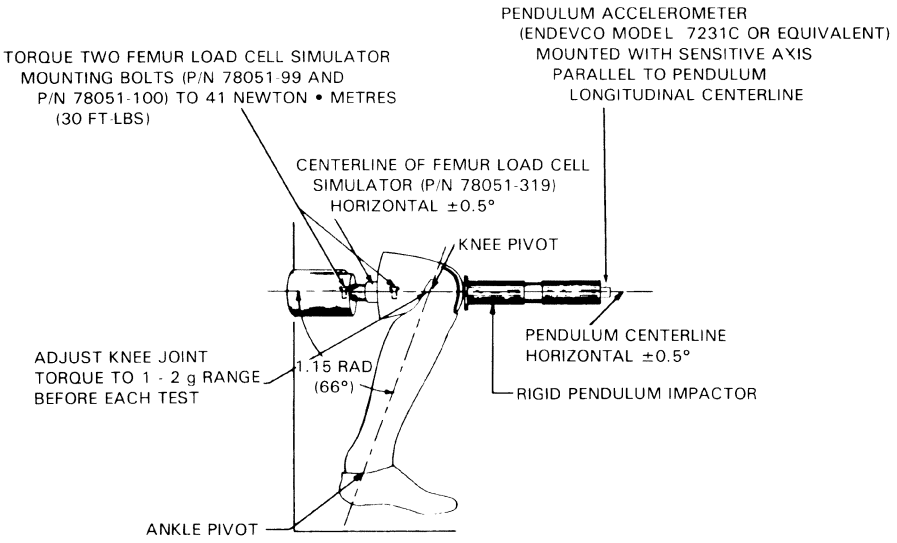

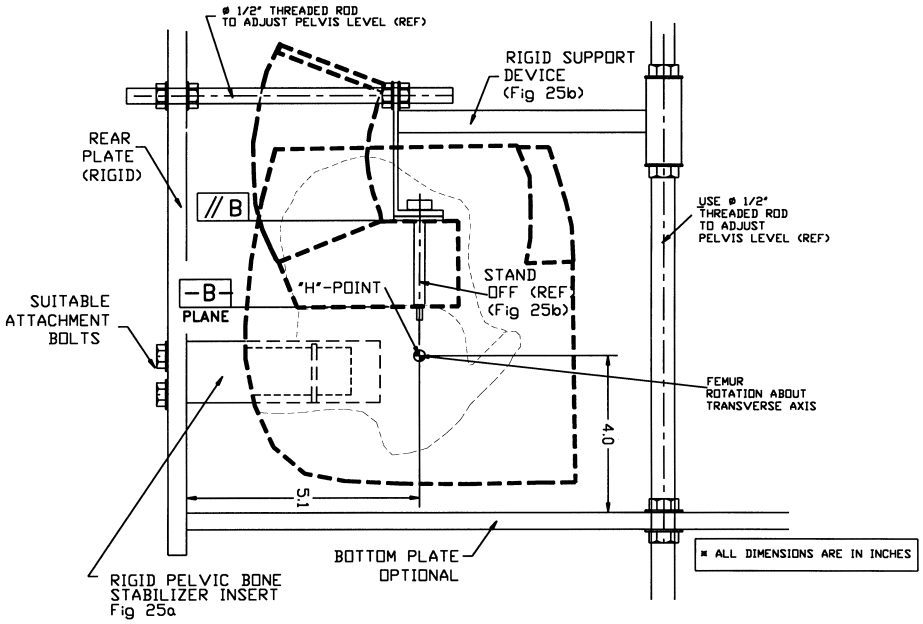

HIP-JOINT TEST FIXTURE ASSEMBLY (REF)
Fig 25

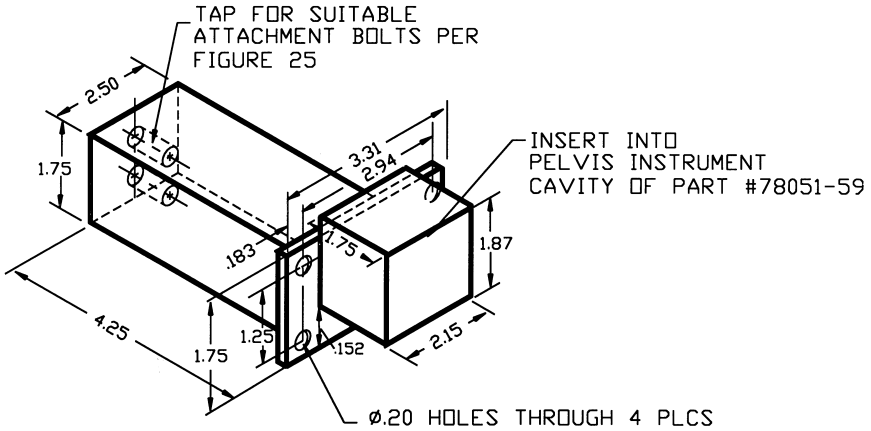

(REF NOTE): HOLE LOCATIONS MATCHING
INSTRUMENT CAVITY COVER #78051-13

* ALL DIMENSIONS ARE IN INCHES

MATERIAL: Alum. or Steel

PELVIC BONE STABILIZER INSERT (REF)

Fig 25a

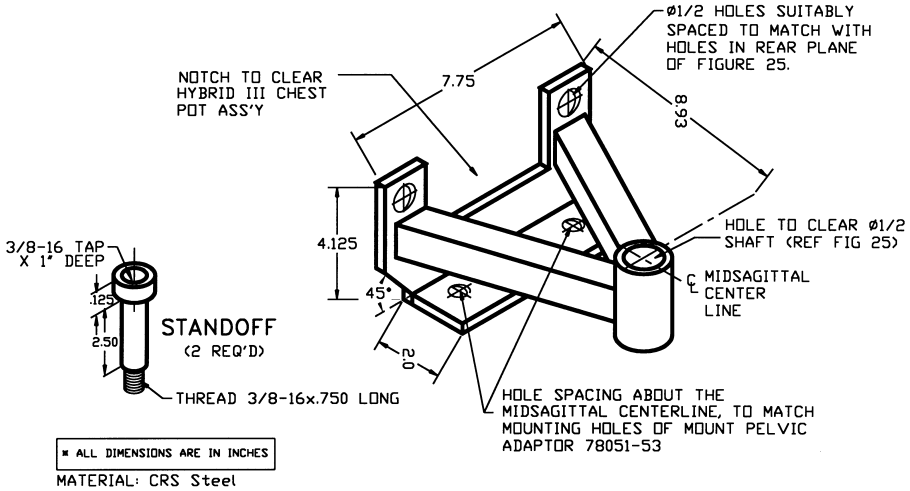

* ALL DIMENSIONS ARE IN INCHES

MATERIAL: CRS Steel

PELVIS UPPER SUPPORT DEVICE (REF)

Fig 25b

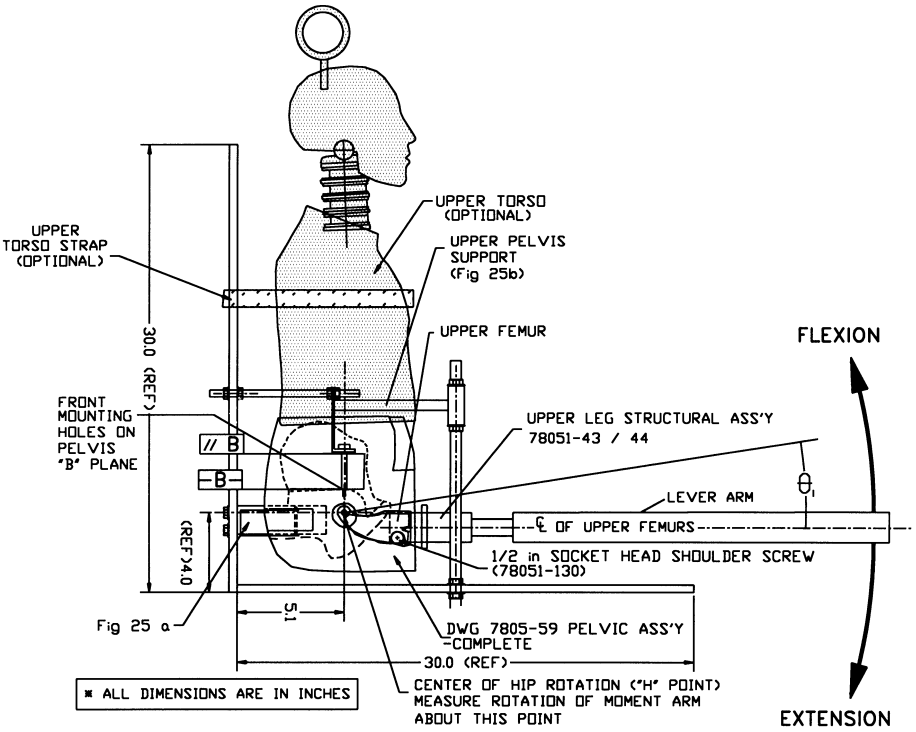

HIP JOINT TEST FIXTURE AND TORSO ASSEMBLY (REF)
SIDE VIEW

Fig 26

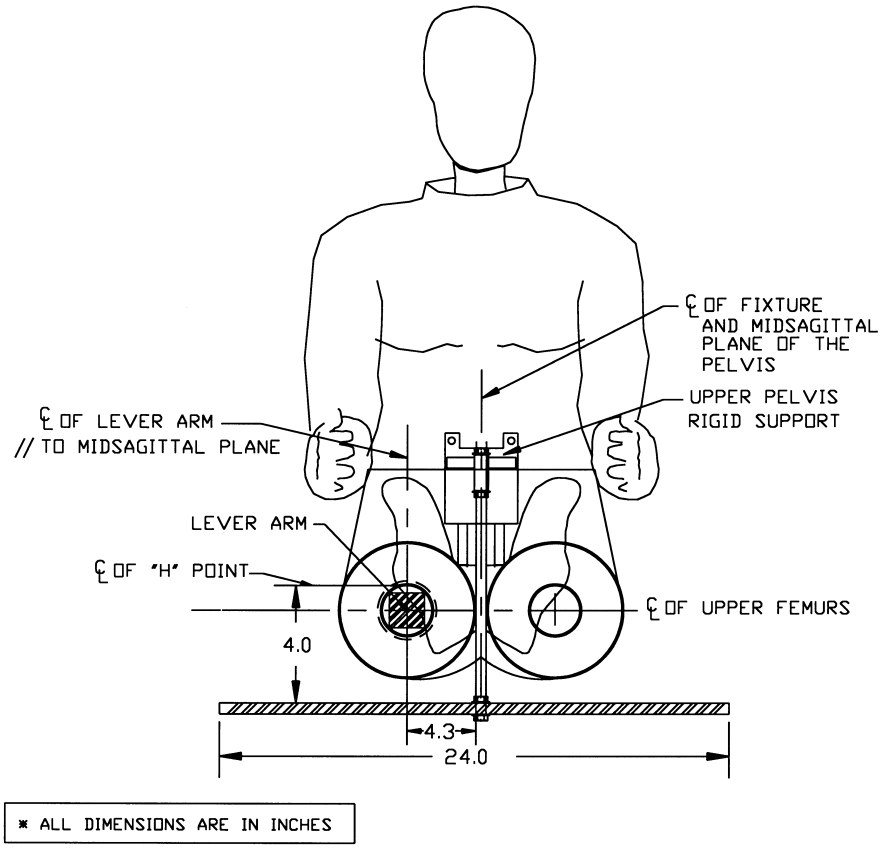

HIP JOINT TEST FIXTURE AND TORSO ASSEMBLY (REF)
FRONT VIEW

Fig 27

[51 FR 26701, July 25, 1986, as amended at 53 FR 8765, Mar. 17, 1988; 61 FR 67955, Dec. 26, 1997; 63 FR 5748, Feb. 4, 1998]

§ 572.36 Test conditions and instrumentation.

(a) The test probe used for thoracic impact tests is a 6 inch diameter cylinder that weighs 51.5 pounds including instrumentation. Its impacting end has a flat right angle face that is rigid and has an edge radius of 0.5 inches. The test probe has an accelerometer mounted on the end opposite from impact with its sensitive axis colinear to the longitudinal centerline of the cylinder.

(b) Test probe used for the knee impact tests is a 3 inch diameter cylinder that weights 11 pounds including instrumentation. Its impacting end has a flat right angle face that is rigid and has an edge radius of 0.02 inches. The test probe has an accelerometer mounted on the end opposite from impact with its sensitive axis colinear to

the longitudinal centerline of the cylinder.

(c) Head accelerometers shall have dimensions and response characteristics specified in drawing 78051–136, revision A, or its equivalent, and the location of their seismic mass as mounted in the skull are shown in drawing C–1709, revision D.

(d) The six axis neck transducer shall have the dimensions, response characteristics, and sensitive axis locations specified in drawing C–1709, revision D and be mounted for testing as shown in Figures 20 and 21 of § 572.33, and in the assembly drawing 78051–218, revision T.

(e) The chest accelerometers shall have the dimensions, response characteristics, and sensitive mass locations specified in drawing 78051–136, revision A or its equivalent and be mounted as shown with adaptor assembly 78051–116, revision D for assembly into 78051–218, revision T.

(f) The chest deflection transducer shall have the dimensions and response characteristics specified in drawing 78051–342, revision A or its equivalent and be mounted in the chest deflection transducer assembly 78051–317, revision A for assembly into 78051–218, revision T.

(g) The thorax and knee impactor accelerometers shall have the dimensions and characteristics of Endevco Model 7231c or equivalent. Each accelerometer shall be mounted with its sensitive axis colinear with the pendulum's longitudinal centerline.

(h) The femur load cell shall have the dimensions, response characteristics, and sensitive axis locations specified in drawing 78051–265 or its equivalent and be mounted in assemblies 78051–46 and –47 for assembly into 78051–218, revision T.

(i) The outputs of acceleration and force-sensing devices installed in the dummy and in the test apparatus specified by this part are recorded in individual data channels that conform to requirements of Society of Automotive Engineers (SAE) Recommended Practice J211 Mar95, Instrumentation for Impact Tests, Parts 1 and 2. SAE J211 Mar95 sets forth the following channel classes:

(1) Head acceleration—Class 1000

(2) Neck forces—Class 1000

(3) Neck moments—Class 600

(4) Neck pendulum acceleration—Class 60

(5) Thorax and thorax pendulum acceleration—Class 180

(6) Thorax deflection—Class 180

(7) Knee pendulum acceleration—Class 600

(8) Femur force—Class 600

(j) Coordinate signs for instrumentation polarity conform to the sign convention shown in the document incorporated by § 572.31(a)(5).

(k) The mountings for sensing devices shall have no resonance frequency within range of 3 times the frequency range of the applicable channel class.

(l) Limb joints are set at lg, barely restraining the weight of the limb when it is extended horizontally. The force required to move a limb segment shall not exceed 2g throughout the range of limb motion.

(m) Performance tests of the same component, segment, assembly, or fully assembled dummy are separated in time by period of not less than 30 minutes unless otherwise noted.

(n) Surfaces of dummy components are not painted except as specified in this part or in drawings subtended by this part.

[51 FR 26701, July 25, 1986, as amended at 53 FR 8765, Mar. 17, 1988; 62 FR 27518, May 20, 1997; 63 FR 45965, Aug. 28, 1998]

Subpart F—Side Impact Dummy 50th Percentile Male

SOURCE: 55 FR 45766, Oct. 30, 1990, unless otherwise noted.

§ 572.40 Incorporated materials.

(a) The drawings, specifications, manual, and computer program referred to in this regulation that are not set forth in full are hereby incorporated in this part by reference. These materials are thereby made part of this regulation. The Director of the Federal Register has approved the materials incorporated by reference. For materials subject to change, only the specific version approved by the Director of the Federal Register and specified in the regulation are incorporated. A notice of any change will be published in the FEDERAL REGISTER. As a convenience

to the reader, the materials incorporated by reference are listed in the Finding Aids Table found at the end of this volume of the Code of Federal Regulations.

(b) The materials incorporated in this part by reference are available for examination in the general reference section of Docket 79–04, Docket Section, National Highway Traffic Safety Administration, room 5109, 400 Seventh St., S.W., Washington, D.C., 20590, telephone (202) 366–4949. Copies may be obtained from Reprographic Technologies, 9000 Virginia Manor Rd., Suite 210, Beltsville, MD, 20705, Telephone (301) 419–5070, Fax (301) 419–5069.

[55 FR 45766, Oct. 30, 1990, as amended at 63 FR 16140, Apr. 2, 1998]

§ 572.41 General description.

(a) The dummy consists of component parts and component assemblies (SA-SID-M001, revision C, dated September 12, 1996, and SA-SID-M001A, revision B, dated September 12, 1996), which are described in approximately 250 drawings and specifications that are set forth in § 572.5(a) of this chapter with the following changes and additions which are described in approximately 85 drawings and specifications (incorporated by reference; see § 572.40):

(1) The head assembly consists of the assembly specified in subpart B (§ 572.6(a)) and conforms to each of the drawings subtended under drawing SA 150 M010 and drawings specified in SA-SID-M010, dated August 13, 1987.

(2) The neck assembly consists of the assembly specified in subpart B (§ 572.7(a)) and conforms to each of the drawings subtended under drawing SA 150 M020 and drawings shown in SA-SID-M010, dated August 13, 1987.

(3) The thorax assembly consists of the assembly shown as number SID–053 and conforms to each applicable drawing subtended by number SA-SID-M030 revision A, dated May 18, 1994.

(4) The lumbar spine consists of the assembly specified in subpart B (§ 572.9(a)) and conforms to drawing SA 150 M050 and drawings subtended by SA-SID-M050 revision B, dated September 12, 1996, including the addition of Lumbar Spacers-Lower SID-SM-001 and Lumbar Spacers-Upper SID-SM-002 (both dated May 12, 1994), and Washer 78051–243.

(5) The abdomen and pelvis consist of the assembly specified in subpart B of this part (§ 572.9) and conform to the drawings subtended by SA 150 M060, the drawings subtended by SA-SID-M060 revision A, dated May 18, 1994, and the drawings subtended by SA-SID-087 sheet 1 revision H, dated May 18, 1994, and SA-SID-087 sheet 2 revision H.

(6) The lower limbs consist of the assemblies specified in subpart B (§ 572.10) shown as SA 150 M080 and SA 150 M081 in Figure 1 and SA-SID-M080 and SA-SID-M081, both dated August 13, 1987, and conform to the drawings subtended by those numbers.

(b) The structural properties of the dummy are such that the dummy conforms to the requirements of this subpart in every respect both before and after being used in vehicle tests specified in Standard No 214 § 571.214 of this chapter.

(c) Disassembly, inspection, and assembly procedures; external dimensions and weight; and a dummy drawing list are set forth in the Side Impact Dummy (SID) User's Manual, dated May 1994 except for pages 7, 20 and 23, and Appendix A (consisting of replacement pages 7, 20 and 23) dated January 20, 1998 (incorporated by reference; see § 572.40).

[55 FR 45766, Oct. 30, 1990, as amended at 59 FR 52091, Oct. 14, 1994; 63 FR 16140, Apr. 2, 1998]

§ 572.42 Thorax.

(a) When the thorax of a completely assembled dummy (SA-SID-M001A revision A, dated May 18, 1994, incorporated by reference; see § 572.40), appropriately assembled for right or left side impact, is impacted by a test probe conforming to § 572.44(a) at 14 fps in accordance with paragraph (b) of this section, the peak accelerations at the location of the accelerometers mounted on the thorax in accordance with § 572.44(b) shall be:

(1) For the accelerometer at the top of the Rib Bar on the struck side (LUR or RUR) not less than 37 g's and not more than 46 g's.

(2) For the accelerometer at the bottom of the Rib Bar on the struck side

(LLR or RLR) not less than 37 g's and not more than 46 g's.

(3) For the lower thoracic spine (T12) not less than 15 g's and not more than 22 g's.

(b) Test Procedure. (1) Adjust the dummy legs as specified in § 572.44(f). Seat the dummy on a seating surface as specified in § 572.44(h) with the limbs extended horizontally forward.

(2) Place the longitudinal centerline of the test probe at the lateral side of the chest at the intersection of the centerlines of the third rib and the Rib Bar on the desired side of impact. This is the left side if the dummy is to be used on the driver's side of the vehicle and the right side if the dummy is to be used on the passenger side of the vehicle. The probe's centerline is perpendicular to thorax's midsagittal plane.

(3) Align the test probe so that its longitudinal centerline coincides with the line formed by the intersection of the transverse and frontal planes perpendicular to the chest's midsagittal plane passing through the designated impact point.

(4) Position the dummy as specified in § 572.44(h), so that the thorax's midsagittal plane and tangential plane to the Hinge Mounting Block (Drawing SID–034) are vertical.

(5) Impact the thorax with the test probe so that at the moment of impact at the designated impact point, the probe's longitudinal centerline falls within 2 degrees of a horizontal line perpendicular to the dummy's midsagittal plane and passing through the designated impact point.

(6) Guide the probe during impact so that it moves with no significant lateral, vertical or rotational movement.

(7) Allow a time period of at least 20 minutes between successive tests of the chest.

[59 FR 52091, Oct. 14, 1994, as amended at 59 FR 52091, Oct. 14, 1994]

§ 572.43 Lumbar spine and pelvis.

(a) When the pelvis of a fully assembled dummy (SA-SID-M001A revision B, dated September 12, 1996, (incorporated by reference; see § 572.40) is impacted laterally by a test probe conforming to § 572.44(a) at 14 fps in accordance with paragraph (b) of this section, the peak acceleration at the location of the accelerometer mounted in the pelvis cavity in accordance with § 572.44(c) shall be not less than 40g and not more than 60g. The acceleration-time curve for the test shall be unimodal and shall lie at or above the +20g level for an interval not less than 3 milliseconds and not more than 7 milliseconds.

(b) Test Procedure. (1) Adjust the dummy legs as specified in § 572.44(f). Seat the dummy on a seating surface as specified in § 572.44(h) with the limbs extended horizontally forward.

(2) Place the longitudinal centerline of the test probe at the lateral side of the pelvis at a point 3.9 inches vertical from the seating surface and 4.8 inches ventral to a transverse vertical plane which is tangent to the back of the dummy's buttocks.

(3) Align the test probe so that at impact its longitudinal centerline coincides with the line formed by intersection of the horizontal and vertical planes perpendicular to the midsagittal plane passing through the designated impact point.

(4) Adjust the dummy so that its midsagittal plane is vertical and the rear surfaces of the thorax and buttocks are tangent to a transverse vertical plane.

(5) Impact the pelvis with the test probe so that at the moment of impact the probe's longitudinal centerline falls within 2 degrees of the line specified in paragraph (b)(3) of this section.

(6) Guide the test probe during impact so that it moves with no significant lateral, vertical or rotational movement.

(7) Allow a time period of at least 2 hours between successive tests of the pelvis.

[55 FR 45766, Oct. 30, 1990, as amended at 59 FR 52091, Oct. 14, 1994; 63 FR 16140, Apr. 2, 1998]

§ 572.44 Instrumentation and test conditions.

(a) The test probe used for lateral thoracic and pelvis impact tests is a 6 inch diameter cylinder that weighs 51.5 pounds including instrumentation. Its impacting end has a flat right angle face that is rigid and has an edge radius of 0.5 inches.

(b) Three accelerometers are mounted in the thorax for measurement of

lateral accelerations with each accelerometer's sensitive axis aligned to be closely perpendicular to the thorax's midsagittal plane. The accelerometers are mounted in the following locations:

(1) One accelerometer is mounted on the thorax to lumbar adaptor (SID–005 revision F, dated May 18, 1994, incorporated by reference; see § 572.40) with seismic mass center located 0.5 inches toward the impact side, 0.1 inches upward and 1.86 inches rearward from the reference point shown in Figure 30 in appendix A to subpart F of part 572. Maximum permissible variation of the seismic location must not exceed 0.2 inches spherical radius.

(2) Two accelerometers are mounted, one on the top and the other at the bottom part of the Rib Bar (SID–024) on the struck side. Their seismic mass centers are at any distance up to .4 inches from a point on the Rib Bar surface located on its longitudinal center line .75 inches from the top for the top accelerometer and .75 inches from the bottom, for the bottom accelerometer.

(c) One accelerometer is mounted in the pelvis for measurement of the lateral acceleration with its sensitive axis perpendicular to the pelvic midsagittal plane. The accelerometer is mounted on the rear wall of the instrumentation cavity of the pelvis (SID–087 revision H, dated May 18, 1994, incorporated by reference; see § 572.40). The accelerometer's seismic mass with respect to the mounting bolt center line is 0.9 inches up, 0.7 inches to the left for left side impact and 0.03 inches to the left for right side impact, and 0.5 inches rearward from the rear wall mounting surface as shown in Figure 31 in appendix A to subpart F of part 572. Maximum permissible variation of the seismic location must not exceed 0.2 inches spherical radius.

(d) Instrumentation and sensors used must conform to the SAE J–211 (1980) recommended practice requirements (incorporated by reference; see § 572.40). The outputs of the accelerometers installed in the dummy are then processed with the software for the Finite Impulse Response (FIR) filter (FIR 100 software). The FORTRAN program for this FIR 100 software (FIR100 Filter Program, Version 1.0, July 16, 1990) is incorporated by reference in this part (see § 572.40). The data are processed in the following manner:

(1) Analog data recorded in accordance with SAE J–211 (1980) recommended practice channel class 1000 specification.

(2) Filter the data with a 300 Hz, SAE Class 180 filter;

(3) Subsample the data to a 1600 Hz sampling rate;

(4) Remove the bias from the subsampled data, and

(5) Filter the data with the FIR100 Filter Program (Version 1.0, July 16, 1990), which has the following characteristics—

(i) Passband frequency, 100 Hz.

(ii) Stopband frequency, 189 Hz.

(iii) Stopband gain, −50 db.

(iv) Passband ripple, 0.0225 db.

(e) The mountings for the spine, rib and pelvis accelerometers shall have no resonance frequency within a range of 3 times the frequency range of the applicable channel class.

(f) Limb joints of the test dummy are set at the force between 1–2 g's, which just supports the limbs' weight when the limbs are extended horizontally forward. The force required to move a limb segment does not exceed 2 g's throughout the range of limb motion.

(g) Performance tests are conducted at any temperature from 66 °F to 78 °F and at any relative humidity from 10 percent to 70 percent after exposure of the dummy to these conditions for a period of not less than 4 hours.

(h) For the performance of tests specified in §§ 572.42 and 572.43, the dummy is positioned as follows:

(1) The dummy is placed on a flat, rigid, clean, dry, horizontal smooth aluminum surface whose length and width dimensions are not less than 16 inches, so that the dummy's midsagittal plane is vertical and centered on the test surface. The dummy's torso is positioned to meet the requirements of § 572.42 and § 572.43. The seating surface is without the back support and the test dummy is positioned so that the dummy's midsagittal plane is vertical and centered on the seat surface.

(2) The legs are positioned so that their centerlines are in planes parallel to the midsagittal plane.

(3) Performance pre-tests of the assembled dummy are separated in time by a period of not less than 20 minutes unless otherwise specified.

(4) Surfaces of the dummy components are not painted except as specified in this part or in drawings subtended by this part.

[55 FR 45766, Oct. 30, 1990, as amended at 56 FR 47011, Sept. 17, 1991; 59 FR 52091, Oct. 14, 1994]

APPENDIX A TO SUBPART F OF PART 572—FIGURES

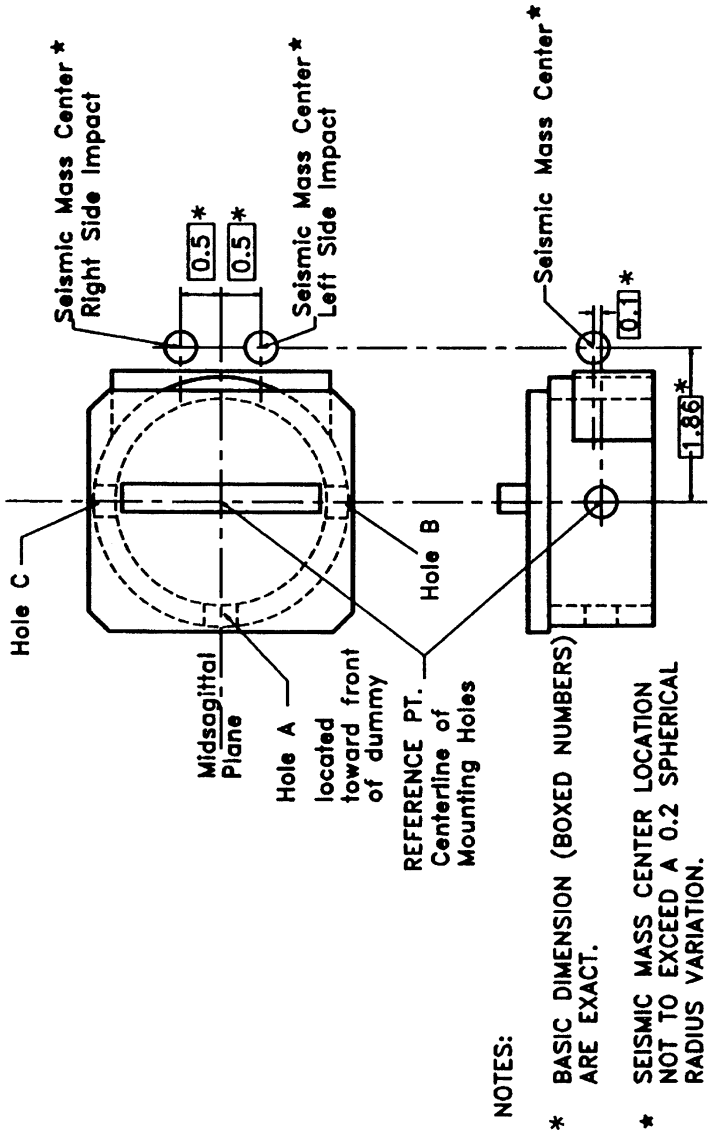

Accelerometer Seismic Mass Location on Assembly SID #005

FIGURE 30

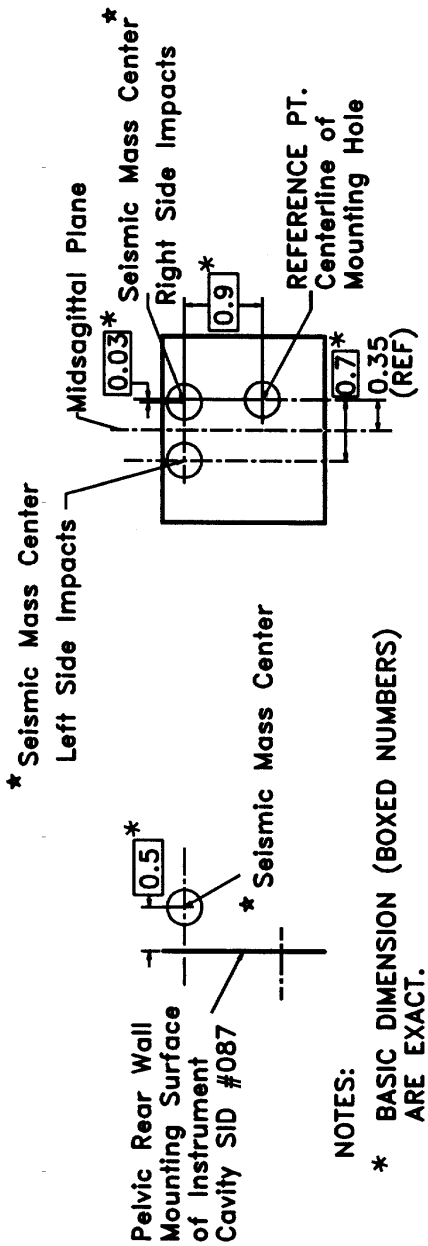

NOTES:

* BASIC DIMENSION (BOXED NUMBERS) ARE EXACT.

* SEISMIC MASS CENTER LOCATION NOT TO EXCEED A 0.2 SPHERICAL RADIUS VARIATION.

Pelvis Accelerometer Seismic Mass Location

FIGURE 31

[59 FR 52092, Oct. 14, 1994]

Subparts G–H [Reserved]

Subpart I—6-Year-Old Child

SOURCE: 56 FR 57836, Nov. 14, 1991, unless otherwise noted.

§ 572.70 Incorporation by reference.

(a) The drawings and specifications referred to in §§ 572.71(a) and 572.71(b) are hereby incorporated in subpart I by reference. These materials are thereby made part of this regulation. The Director of the Federal Register approved the materials incorporated by reference in accordance with 5 U.S.C. 552(a) and 1 CFR part 51. Copies of the materials may be inspected at NHTSA's Docket Section, 400 Seventh Street, SW., room 5109, Washington, DC, or at the National Archives and Records Administration (NARA). For information on the availability of this material at NARA, call 202–741–6030, or go to: *http://www.archives.gov/federal_register/code_of_federal_regulations/ibr_locations.html*.

(b) The incorporated material is available as follows:

(1) Drawing number SA 106 C001 sheets 1 through 18, and the drawings listed in the parts lists described on sheets 8 through 17, are available from Reprographic Technologies, 9000 Virginia Manor Rd., Beltsville, MD 20705, Telephone (301) 210–5600, Fax (301) 210–5607.

(2) A User's Manual entitled, ''Six-Year-Old Size Child Test Dummy SA106C,'' October 28, 1991, is available from Reprographic Technologies at the address in paragraph (b)(1) of this section.

(3) SAE Recommended Practice J211, Instrumentation for Impact Test, June 1988, is available from the Society of Automotive Engineers, Inc., 400 Commonwealth Drive, Warrendale, PA 15096–0001.

[56 FR 57836, Nov. 14, 1991, as amended at 62 FR 44226, Aug. 20, 1997]

§ 572.71 General description.

(a) The representative 6-year-old dummy consists of a drawings and specifications package that contains the following materials:

(1) Technical drawings, specifications, and the parts list package shown in SA 106C 001, sheets 1 through 18, re-released July 11, 1997;

(2) A user's manual entitled, ''Six-Year-Old Size Child Test Dummy SA106C,'' October 28, 1991.

(b) The dummy is made up of the component assemblies set out in Table A:

TABLE A

Assembly drawing No.	Drawing title	Listed on drawing No.	Revision
SA 106C 010	Head Assembly	SA 106C 001, sheet 8	A
SA 106C 020	Neck Assembly	SA 106C 001, sheet 9	A
SA 106C 030	Thorax Assembly	SA 106C 001, sheet 10	C
SA 106C 030	Thorax Assembly	SA 106C 001, sheet 11	D
SA 106C 041	Arm Assembly (right)	SA 106C 001, sheet 14	A
SA 106C 042	Arm Assembly (left)	SA 106C 001, sheet 15	A
SA 106C 050	Lumbar Spine Assembly	SA 106C 001, sheet 12	A
SA 106C 060	Pelvis Assembly	SA 106C 001, sheet 13	A
SA 106C 071	Leg Assembly (right)	SA 106C 001, sheet 16	A
SA 106C 072	Leg Assembly (left)	SA 106C 001, sheet 17	A

(c) Adjacent segments are joined in a manner such that except for contacts existing under static conditions, there is no contact between metallic elements throughout the range of motion or under simulated crash-impact conditions.

(d) The structural properties of the dummy are such that the dummy conforms to this part in every respect both before and after its use in any test similar to those specified in Standard 213, Child Restraint Systems.

[56 FR 57836, Nov. 14, 1991, as amended at 62 FR 44226, Aug. 20, 1997]

§ 572.72 Head assembly and test procedure.

(a) *Head assembly*. The head consists of the assembly designated as SA 106

010 on drawing No. SA 106C 001, sheet 2, and conforms to each drawing listed on SA 106C 001, sheet 8.

(b) *Head assembly impact response requirements.* When the head is impacted by a test probe conforming to § 572.77(a)(1) at 7 feet per second (fps) according to the test procedure in paragraph (c) of this section, then the resultant head acceleration measured at the location of the accelerometer installed in the headform according to § 577.77(b) is not less than 130g and not more than 160g.

(1) The recorded acceleration-time curve for this test is unimodal at or above the 50g level, and lies at or above that level for an interval not less than 1.0 and not more than 2.0 milliseconds.

(2) The lateral acceleration vector does not exceed 5g.

(c) *Head test procedure.* The test procedure for the head is as follows:

(1) Seat and orient the dummy on a seating surface having a back support as specified in § 572.78(c), and adjust the joints of the limbs at any setting (between 1g and 2g) which just supports the limbs' weight when the limbs are extended horizontally and forward.

(2) Adjust the test probe so that its longitudinal center line is—

(i) At the forehead at the point of orthogonal intersection of the head midsagittal plane and the transverse plane which is perpendicular to the Z axis of the head as shown in Figure 40;

(ii) Located 2.7 ±0.1 inches below the top of the head measured along the Z axis, and;

(iii) Coincides within 2 degrees with the line made by the intersection of the horizontal and midsagittal planes passing through this point.

(3) Impact the head with the test probe so that at the moment of contact the probe's longitudinal center line falls within 2 degrees of a horizontal line in the dummy's midsagittal plane.

(4) Guide the test probe during impact so that there is no significant lateral, vertical, or rotational movement.

(5) Allow at least 60 minutes between successive head tests.

§ 572.73 Neck assembly and test procedure.

(a) *Neck assembly.* The neck consists of the assembly designated as SA 106C 020 on drawing SA 106C 001, sheet 2, and conforms to each drawing listed on SA 106C 001, sheet 9.

(b) *Neck assembly impact response requirements.* When the head-neck assembly (SA 106C 010 and SA 106C 020) is tested according to the test procedure in § 572.73(c), the head:

(1) Shall rotate, while translating in the direction of the pendulum preimpact flight, in reference to the pendulum's longitudinal center line a total of 78 degrees ±6 degrees about the head's center of gravity; and

(2) Shall rotate to the extent specified in Table B at each indicated point in time, measured from time of impact, with the chordal displacement measured at the head's center of gravity.

(i) Chordal displacement at time ''T'' is defined as the straight line distance between the position relative to the pendulum arm of the head's center of gravity at time ''zero;'' and the position relative to the pendulum arm of the head's center of gravity at time T as illustrated by Figure 3 in § 572.11.

(ii) The peak resultant acceleration recorded at the location of the accelerometers mounted in the headform according to § 572.77(b) shall not exceed 30g.

TABLE B

Rotation (degrees)	Time (ms) ±(2+.08T)	Chordal displacement (inches) ±0.8
0	0	0
30	26	2.7
60	44	4.3
Maximum	68	5.8
60	101	4.4
30	121	2.4
0	140	0

(3) The pendulum shall not reverse direction until the head's center of gravity returns to the original ''zero'' time position relative to the pendulum arm.

(c) *Neck test procedure.* The test procedure for the neck is as follows:

(1) Mount the head and neck assembly on a rigid pendulum as specified in § 572.21, Figure 15, so that the head's midsagittal plane is vertical and coincides with the plane of motion of the pendulum's longitudinal center line. Attach the neck directly to the pendulum as shown in § 572.21, Figure 15.

(2) Release the pendulum and allow it to fall freely from a height such that the velocity at impact is 17.00 ±1.0 fps, measured at the center of the accelerometer specified in § 572.21, Figure 15.

(3) Decelerate the pendulum to a stop with an acceleration-time pulse described as follows:

(i) Establish 5g and 20g levels on the a-t curve.

(ii) Establish t_1 at the point where the rising a-t curve first crosses the 5g level; t_2 at the point where the rising a-t curve first crosses the 20g level; t_3 at the point where the decaying a-t curve last crosses the 20g level; and t_4 at the point where the decaying a-t curve first crosses the 5g level.

(iii) $t_2 - t_1$ shall not be more than 3 milliseconds.

(iv) $t_3 - t_2$ shall not be more than 22 milliseconds, and not less than 19 milliseconds.

(v) $t_4 - t_3$ shall not be more than 6 milliseconds.

(vi) The average deceleration between t_2 and t_3 shall not be more than 26g, or less than 22g.

(4) Allow the neck to flex without the head or neck contacting any object other than the pendulum arm.

(5) Allow at least 60 minutes between successive tests.

[56 FR 57836, Nov. 14, 1991, as amended at 57 FR 4086, Feb. 3, 1992]

§ 572.74 Thorax assembly and test procedure.

(a) *Thorax assembly*. The thorax consists of the part of the torso assembly designated as SA 106C 030 on drawing SA 106C 001, sheet 2, Revision A, and conforms to each applicable drawing on SA 106C 001 sheet 10, Revision C (including Drawing number 6C–1610–1 thru –4, Revision A, titled ''Screw Button Head Socket'', dated September 30, 1996, and Drawing number 6C–1021, Revision B, titled ''Ballast, 6 Yr. Thoraxc (for 7267A)'', dated September 24, 1996), and sheet 11, Revision D (including Drawing number SA 6C–909, Revision A, titled ''Cover-chest Accelerometer'', dated September 21, 1996, and Drawing number 6C–1000–1, Revision C, titled ''Sternum Thoracic Weld Ass'y.'', dated September 24, 1996).

(b) *Thorax assembly requirements*. When the thorax is impacted by a test probe conforming to § 572.77(a) to 20 ±0.3 fps according to the test procedure in paragraph (c) of this section, the peak resultant accelerations at the accelerometers mounted in the chest cavity according to § 572.77(c) shall not be less than 43g and not more than 53g.

(1) The recorded acceleration-time curve for this test shall be unimodal at or above the 30g level, and shall lie at or above that level for an interval not less than 4 milliseconds and not more than 6 milliseconds.

(2) The lateral accelerations shall not exceed 5g.

(c) *Thorax test procedure*. The test procedure for the thorax is as follows:

(1) Seat and orient the dummy on a seating surface without back support as specified in § 572.78(c), and adjust the joints of the limbs at any setting (between 1g and 2g) which just supports the limbs' weight when the limbs are extended horizontally and forward, parallel to the midsagittal plane.

(2) Establish the impact point at the chest midsagittal plane so that the impact point is 2.25 inches below the longitudinal center of the clavicle retainer screw, and adjust the dummy so that the plane that bisects the No. 3 rib into upper and lower halves is horizontal ±1 degree.

(3) Place the longitudinal center line of the test probe so that it coincides with the designated impact point, and align the test probe so that at impact, the probe's longitudinal center line coincides (within 2 degrees) with the line formed at the intersection of the horizontal and midsagittal planes and passing through the designated impact point.

(4) Impact the thorax with the test probe so that at the moment of contact the probe's longitudinal center line falls within 2 degrees of a horizontal line in the dummy's midsagittal plane.

(5) Guide the test probe during impact so that there is no significant lateral, vertical, or rotational movement.

(6) Allow at least 30 minutes between successive tests.

[56 FR 57836, Nov. 14, 1991, as amended at 60 FR 2897, Jan. 12, 1995; 62 FR 44227, Aug. 20, 1997]

§ 572.75 Lumbar spine, abdomen, and pelvis assembly and test procedure.

(a) *Lumbar spine, abdomen, and pelvis assembly*. The lumbar spine, abdomen, and pelvis consist of the part of the torso assembly designated as SA 106C 50 and 60 on drawing SA 106C 001, sheet 2, and conform to each applicable drawing listed on SA 106C 001, sheets 12 and 13.

(b) *Lumbar spine, abdomen, and pelvis assembly response requirements*. When the lumbar spine is subjected to a force continuously applied according to the test procedure set out in paragraph (c) of this section, the lumbar spine assembly shall—

(1) Flex by an amount that permits the rigid thoracic spine to rotate from the torso's initial position, as defined in (c)(3), by 40 degrees at a force level of not less that 46 pounds and not more than 52 pounds, and

(2) Straighten upon removal of the force to within 5 degrees of its initial position when the force is removed.

(c) *Lumbar spine, abdomen, and pelvis test procedure*. The test procedure for the lumbar spine, abdomen, and pelvis is as follows:

(1) Remove the dummy's head-neck assembly, arms, and lower legs, clean and dry all component surfaces, and seat the dummy upright on a seat as specified in Figure 42.

(2) Adjust the dummy by—

(i) Tightening the femur ballflange screws at each hip socket joint to 50 inch-pounds torque;

(ii) Attaching the pelvis to the seating surface by a bolt D/605 as shown in Figure 42.

(iii) Attaching the upper legs at the knee joints by the attachments shown in drawing Figure 42.

(iv) Tightening the mountings so that the pelvis-lumbar joining surface is horizontal; and

(v) Removing the head and neck, and installing a cylindrical aluminum adapter (neck adapter) of 2.0 inches diameter and 2.60 inches length as shown in Figure 42.

(3) The initial position of the dummy's torso is defined by the plane formed by the rear surfaces of the shoulders and buttocks which is three to seven degrees forward of the transverse vertical plane.

(4) Flex the thorax forward 50 degrees and then rearward as necessary to return the dummy to its initial torso position, unsupported by external means.

(5) Apply a forward pull force in the midsagittal plane at the top of the neck adapter so that when the lumbar spine flexion is 40 degrees, the applied force is perpendicular to the thoracic spine box.

(i) Apply the force at any torso deflection rate between 0.5 and 1.5 degrees per second, up to 40 degrees of flexion.

(ii) For 10 seconds, continue to apply a force sufficient to maintain 40 degrees of flexion, and record the highest applied force during the 10 second period.

(iii) Release all force as rapidly as possible, and measure the return angle 3 minutes after the release.

§ 572.76 Limbs assembly and test procedure.

(a) *Limbs assembly*. The limbs consist of the assemblies designated as SA 106C 041, SA 106C 042, SA 106C 071, and SA 106C 072, on drawing No. SA 106C 001, sheet 2, and conform to each applicable drawing listed on SA 106C 001, sheets 14 through 17.

(b) *Limbs assembly impact response requirement*. When each knee is impacted at 7.0 ±0.1 fps, according to paragraph (c) of this section, the maximum force on the femur shall not be more than 1060 pounds and not less than 780 pounds, with a duration above 400 pounds of not less than 0.8 milliseconds.

(c) *Limbs test procedure*. The test procedure for the limbs is as follows:

(1) Seat and orient the dummy without back support on a seating surface that is 11 ±0.2 inches above a horizontal (floor) surface as specified in § 572.78(c).

(i) Orient the dummy as specified in Figure 43 with the hip joint adjustment at any setting between 1g and 2g.

(ii) Place the dummy legs in a plane parallel to the dummy's midsagittal plane with the knee pivot center line perpendicular to the dummy's midsagittal plane, and with the feet flat on the horizontal (floor) surface.

(iii) Adjust the feet and lower legs until the line between the midpoint of

each knee pivot and each ankle pivot is within 2 degrees of the vertical.

(2) If necessary, reposition the dummy so that at the level one inch below the seating surface, the rearmost point of the dummy's lower legs remains not less than 3 inches and not more than 6 inches forward of the forward edge of the seat.

(3) Align the test probe specified in § 572.77(a) with the longitudinal center line of the femur force gauge, so that at impact, the probe's longitudinal center line coincides with the sensor's longitudinal center line within ±2 degrees.

(4) Impact the knee with the test probe moving horizontally and parallel to the midsagittal plane at the specified velocity.

(5) Guide the test probe during impact so that there is no significant lateral, vertical, or rotational movement.

§ 572.77 Instrumentation.

(a)(1) *Test probe*. For the head, thorax, and knee impact test, use a test probe that is rigid, of uniform density and weighs 10 pounds and 6 ounces, with a diameter of 3 inches; a length of 13.8 inches; and an impacting end that has a rigid flat right face and edge radius of 0.5 inches.

(2) The head and thorax assembly may be instrumented either with a Type A or Type B accelerometer.

(i) Type A accelerometer is defined in drawing SA 572 S1.

(ii) Type B accelerometer is defined in drawing SA 572 S2.

(b) *Head accelerometers*. (1) Install accelerometers in the head as shown in drawing SA 106C 001 sheet 1 using suitable spacers or adaptors as needed to affix them to the horizontal transverse bulkhead so that the sensitive axes of the three accelerometers intersect at the point in the midsagittal plane located 0.4 inches below the intersection of a line connecting the longitudinal center lines of the roll pins in either side of the dummy's head with the head's midsagittal plane.

(2) The head has three orthogonally mounted accelerometers aligned as follows:

(i) Align one accelerometer so that its sensitive axis is perpendicular to the horizontal bulkhead in the midsagittal plane.

(ii) Align the second accelerometer so that its sensitive axis is parallel to the horizontal bulkhead, and perpendicular to the midsagittal plane.

(iii) Align the third accelerometer so that its sensitive axis is parallel to the horizontal bulkhead in the midsagittal plane.

(iv) The seismic mass center for any of these accelerometers may be at any distance up to 0.4 inches from the axial intersection point.

(c) *Thoracic accelerometers*. (1) Install accelerometers in the thoracic assembly as shown in drawing SA 106C 001, sheet 1, using suitable spacers and adaptors to affix them to the frontal surface of the spine assembly so that the sensitive axes of the three accelerometers intersect at a point in the midsagittal plane located 0.95 inches posterior of the spine mounting surface, and 0.55 inches below the horizontal centerline of the two upper accelerometer mount attachment hole centers.

(2) The sternum-thoracic assembly has three orthogonally mounted accelerometers aligned as follows:

(i) Align one accelerometer so that its sensitive axis is parallel to the attachment surface in the midsagittal plane.

(ii) Align the second accelerometer so that its sensitive axis is parallel to the attachment surface, and perpendicular to the midsagittal plane.

(iii) Align the third accelerometer so that its sensitive axis is perpendicular to the attachment surface in the midsagittal plane.

(iv) The seismic mass center for any of these accelerometers may be at any distance up to 0.4 inches of the axial intersection point.

(d) *Femur-sensing device*. Install a force-sensing device SA 572–S10 axially in each femur shaft as shown in drawing SA 106C 072 and secure it to the femur assembly so that the distance measured between the center lines of two attachment bolts is 3.00 inches.

(e) *Limb joints*. Set the limb joints at lg, barely restraining the limb's weight when the limb is extended horizontally, and ensure that the force required to move the limb segment does not exceed 2g throughout the limb's range of motion.

(f) *Recording outputs*. Record the outputs of acceleration and force-sensing devices installed in the dummy and in the test apparatus specified in this part, in individual channels that conform to the requirements of SAE Recommended Practice J211, October 1988, with channel classes as set out in the following table C.

TABLE C

Device	Channel
Head acceleration	Class 1000
Pendulum acceleration	Class 60
Thorax acceleration	Class 180
Femur-force	Class 600

The mountings for sensing devices shall have no resonance frequency within a range of 3 times the frequency range of the applicable channel class.

§ 572.78 Performance test conditions.

(a) Conduct performance tests at any temperature from 66 °F to 78 °F, and at any relative humidity from 10 percent to 70 percent, but only after having first exposed the dummy to these conditions for a period of not less than 4 hours.

(b) For the performance tests specified in § 572.72 (head), § 572.74 (thorax), § 572.75 (lumbar spine, abdomen, and pelvis), and § 572.76 (limbs), position the dummy as set out in paragraph (c) of this section.

(c) Place the dummy on a horizontal seating surface covered by teflon sheeting so that the dummy's midsagittal plane is vertical and centered on the test surface.

(1) The seating surface is flat, rigid, clean, and dry, with a smoothness not exceeding 40 microinches, a length of at least 16 inches, and a width of at least 16 inches.

(2) For head impact tests, the seating surface has a vertical back support whose top is 12.4 ±0.2 inches above the horizontal surface, and the rear surfaces of the dummy's back and buttocks touch the back support as shown in Figure 40.

(3) For the thorax, lumbar spine, and knee tests, the horizontal surface is without a back support as shown in Figure 41 (for the thorax); Figure 42 (for the lumbar spine); and Figure 43 (for the knee).

(4) Position the dummy's arms and legs so that their center lines are in planes parallel to the midsagittal plane.

(5) Adjust each shoulder yoke so that with its upper surface horizontal, a yoke is at the midpoint of its anterior-posterior travel.

(6) Adjust the dummy for head and knee impact tests so that the rear surfaces of the shoulders and buttocks are tangent to a transverse vertical plane.

(d) The dummy's dimensions are specified in drawings SA 106C 001, sheet 3, Revision A, July 11, 1997, and sheets 4 through 6.

(e) Unless otherwise specified in this regulation, performance tests of the same component, segment, assembly or fully assembled dummy are separated in time by a period of not less than 20 minutes.

(f) Unless otherwise specified in this regulation, the surfaces of the dummy components are not painted.

[56 FR 57836, Nov. 14, 1991, as amended at 62 FR 44227, Aug. 20, 1997]

FIGURES TO SUBPART I OF PART 572

FIGURE 40
HEAD IMPACT TEST SET-UP

43

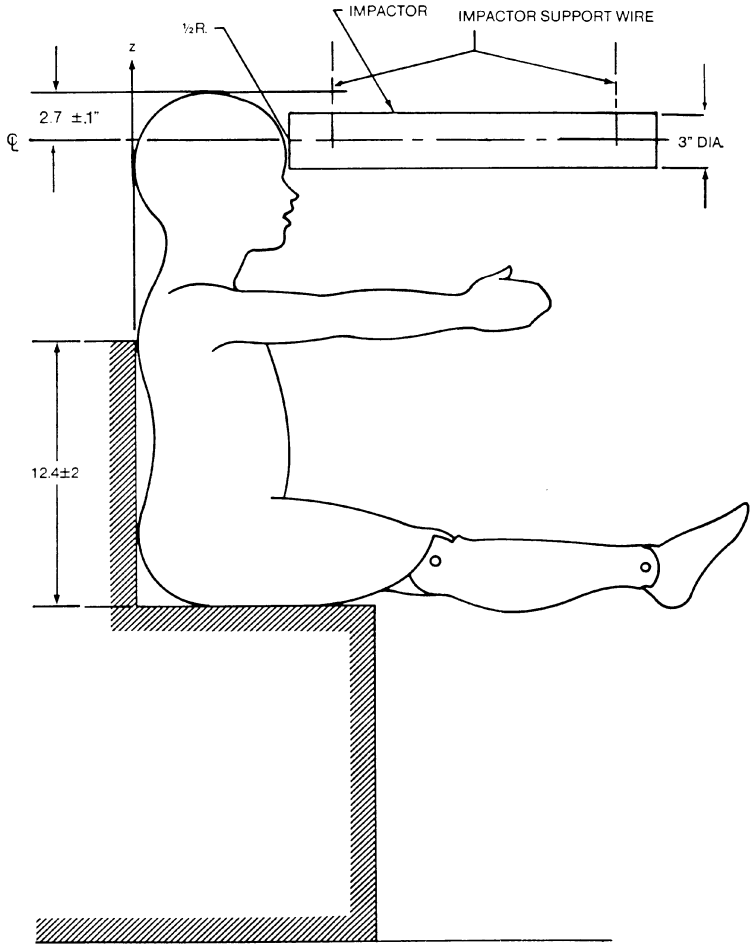

NOTES: 1. DUMMY IMPACT SENSORS NOT USED IN THIS TEST MAY BE REPLACED BY EQUIVALENT DEAD WEIGHTS.

2. NO EXTERNAL SUPPORTS ARE REQUIRED ON THE DUMMY TO MEET SET-UP SPECIFICATIONS.

3. THE MIDSAGITTAL PLANE OF THE DUMMY IS VERTICAL WITHIN +/−1 DEG.

4. THE MIDSAGITTAL PLANE OF THE HEAD IS CENTERED WITH RESPECT TO THE LONGITUDINAL CENTERLINE OF THE PENDULUM WITHIN 0.12 IN.

FIGURE 41
THORAX IMPACT TEST SET-UP

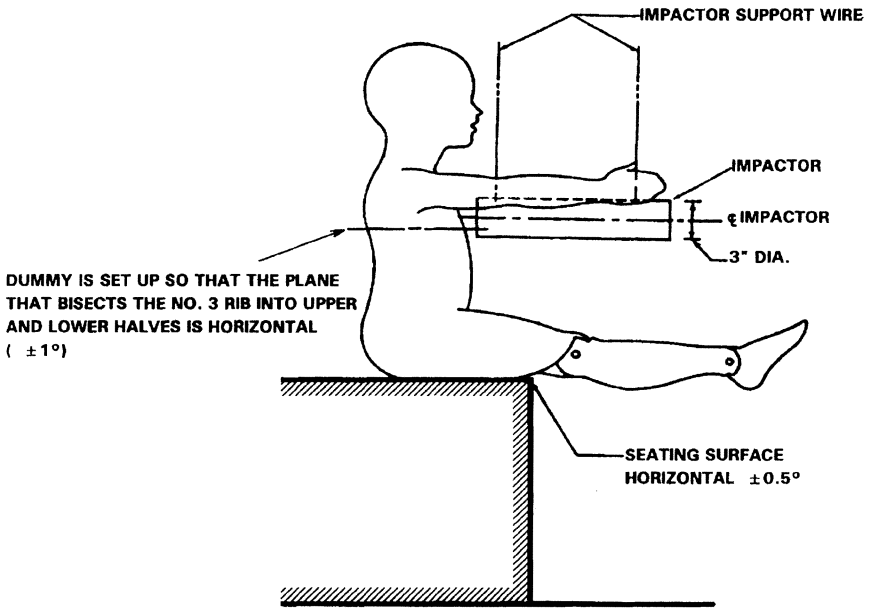

NOTES:

1. DUMMY IMPACT SENSORS NOT USED IN THIS TEST MAY BE REPLACED BY EQUILVALENT DEAD WEIGHTS.
2. NO EXTERNAL SUPPORTS ARE REQUIRED ON THE DUMMY TO MEET SET-UP SPECIFICATIONS.
3. THE MIDSAGITTAL PLANE OF THE DUMMY IS VERTICAL WITHIN +/-1 DEG.
4. THE MIDSAGITTAL PLANE OF THE THORAX IS CENTERED WITH RESPECT TO THE LONGITUDINAL CENTERLINE OF THE PENDULUM WITHIN 0.12 IN.

[60 FR 2898, Jan. 12, 1995]

45

FIGURE 42
LUMBAR SPINE FLEXION TEST SET-UP

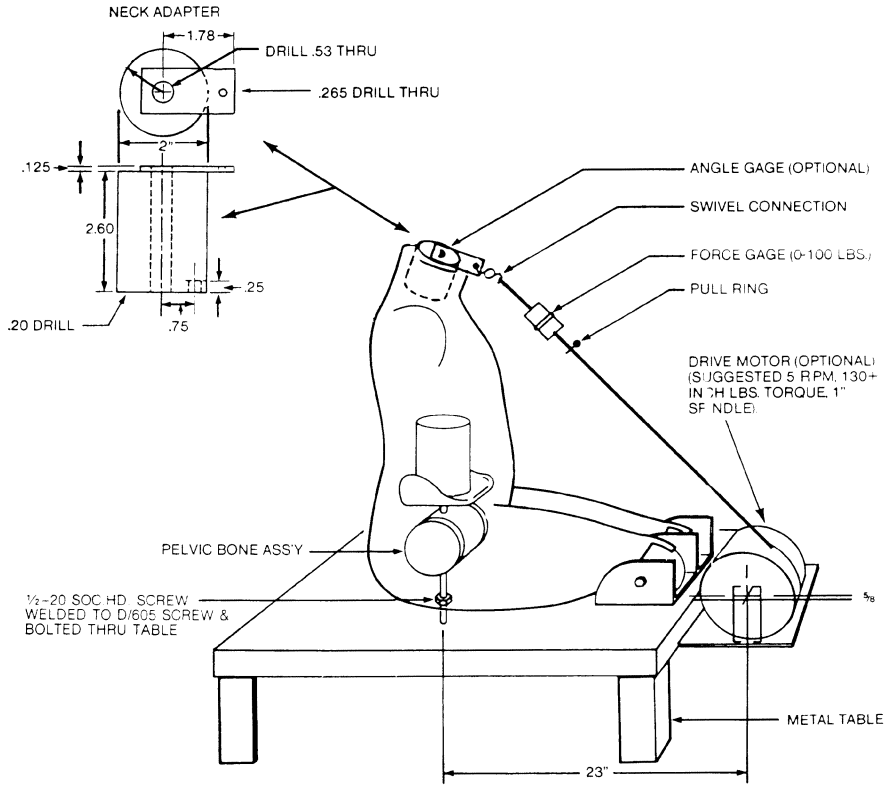

NOTES: 1. DUMMY IMPACT SENSORS NOT USED IN THIS TEST MAY BE REPLACED BY EQUIVALENT DEAD WEIGHTS.

2. NO EXTERNAL SUPPORTS ARE REQUIRED ON THE DUMMY TO MEET SET-UP SPECIFICATIONS.

3. THE MIDSAGITTAL PLANE OF THE DUMMY IS VERTICAL WITHIN + /−1 DEG.

4. THE DUMMY IN THE SEATED POSITION IS FIRMLY AFFIXED TO THE TEST BENCH AT THE PELVIC BONE AND AT THE KNEES.

5. THE PULL-FLEXION FORCE, APPLIED THROUGH A RIGID NECK ADAPTOR WHICH IS MOUNTED ON TOP OF THE THORACIC STERNUM ASSEMBLY (C/601), IS ALIGNED WITH THE MIDSAGITTAL PLANE OF THE DUMMY WITHIN +/−1 DEG.

6. THE SWIVEL FOR THE FORCE MEASURING SENSOR MUST NOT BIND OR BOTTOM OUT THROUGH THE ENTIRE LOADING CYCLE.

46

FIGURE 43
KNEE IMPACT TEST SET-UP

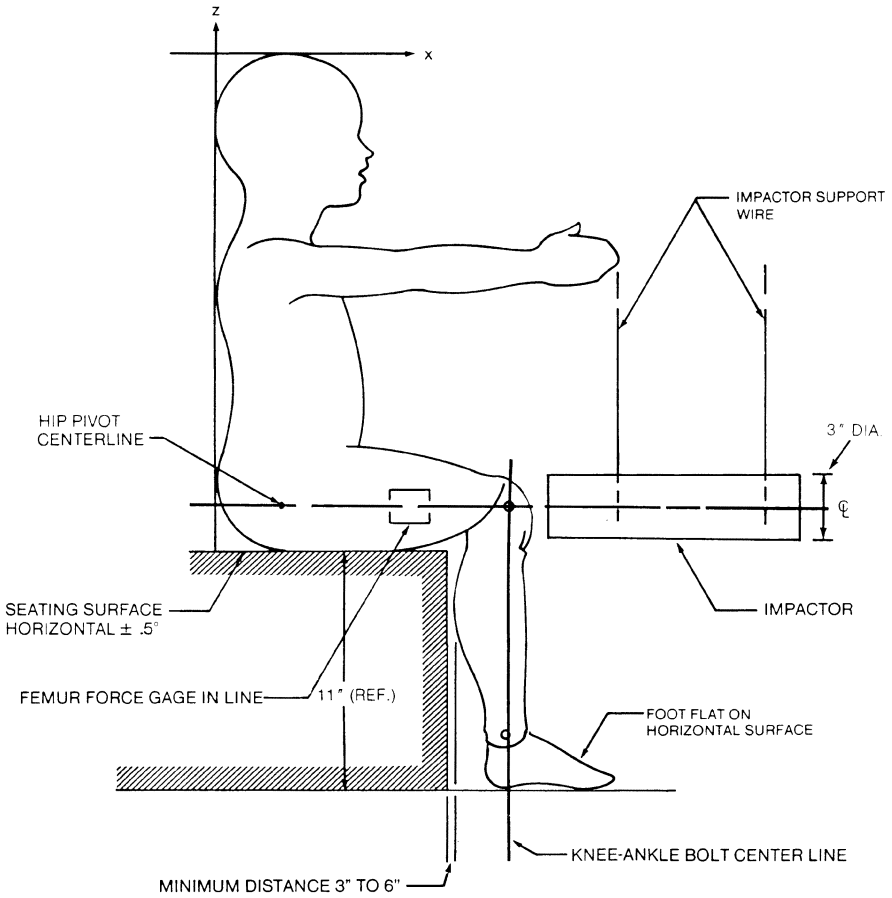

NOTES: 1. DUMMY IMPACT SENSORS NOT USED IN THIS TEST MAY BE REPLACED BY EQUIVALENT DEAD WEIGHTS.

2. NO EXTERNAL SUPPORTS ARE REQUIRED ON THE DUMMY TO MEET SET-UP SPECIFICATIONS.

3. THE MIDSAGITTAL PLANE OF THE DUMMY IS VERTICAL WITHIN +/−1 DEG.

4. CENTERLINE OF THE IMPACTED FEMUR IS ALIGNED WITH THE CENTERLINE OF THE IMPACTOR AND THE PLANE OF THE IMPACTOR MOTION WITHIN +/−1 DEG.

Subpart J—9-Month Old Child

SOURCE: 56 FR 41080, Aug. 19, 1991, unless otherwise noted.

§ 572.80 Incorporated materials.

The drawings and specifications referred to in § 572.81(a) that are not set forth in full are hereby incorporated in

this part by reference. These materials are thereby made part of this regulation. The Director of the Federal Register approved the materials incorporated by reference in accordance with 5 U.S.C. 552(a) and 1 CFR part 51. Copies of the materials may be obtained from Rowley-Scher Reprographics, Inc., 1216 K Street, NW., Washington, DC 20002, telephone (202) 628–6667. Copies are available for inspection in the general reference section of Docket 89–11, Docket Section, National Highway Traffic Safety Administration, room 5109, 400 Seventh Street, SW., Washington, DC, or at the National Archives and Records Administration (NARA). For information on the availability of this material at NARA, call 202–741–6030, or go to: *http://www.archives.gov/federal_register/code_of_federal_regulations/ibr_locations.html*.

§ 572.81 General description.

(a) The dummy consists of: (1) The assembly specified in drawing LP 1049/A, March 1979, which is described in its entirety by means of approximately 54 separate drawings and specifications, 1049/1 through 1049/54; and (2) a parts list LP 1049/0 (5 sheets); and (3) a report entitled, ''The TNO P3/4 Child Dummy Users Manual,'' January 1979, published by Instituut voor Wegtransportmiddelen TNO.

(b) Adjacent dummy segments are joined in a manner such that throughout the range of motion and also under simulated crash-impact conditions there is no contact between metallic elements except for contacts that exist under static conditions.

(c) The structural properties of the dummy are such that the dummy conforms to this part in every respect both before and after being used in dynamic tests such as that specified in Standard No. 213 of this chapter (§ 571.213).

§ 572.82 Head.

The head consists of the assembly shown in drawing LP 1049/A and conforms to each of the applicable drawings listed under LP 1049/0 through 54.

§ 572.83 Head-neck.

The head-neck assembly shown in drawing 1049/A consists of parts specified as items 1 through 16 and in item 56.

§ 572.84 Thorax.

The thorax consists of the part of the torso shown in assembly drawing LP 1049/A and conforms to each of the applicable drawings listed under LP 1049/0 through 54.

§ 572.85 Lumbar spine flexure.

(a) When subjected to continuously applied force in accordance with paragraph (b) of this section, the lumbar spine assembly shall flex by an amount that permits the thoracic spine to rotate from its initial position in accordance with Figure No. 18 of § 572.21 (49 CFR part 572) by 40 degrees at a force level of not less than 18 pounds and not more than 22 pounds, and straighten upon removal of the force to within 5 degrees of its initial position.

(b) *Test procedure.* (1) The lumbar spine flexure test is conducted on a dummy assembly as shown in drawing LP 1049/A, but with the arms (which consist of parts identified as items 17 through 30) and all head-neck parts (identified as items 1 through 13 and 59 through 63), removed.

(2) With the torso assembled in an upright position, adjust the lumbar cable by tightening the adjustment nut for the lumbar vertebrae until the spring is compressed to ⅔ of its unloaded length.

(3) Position the dummy in an upright seated position on a seat as indicated in Figure No. 18 of § 572.21 (lower legs do not need to be removed, but must be clamped firmly to the seating surface), ensuring that all dummy component surfaces are clean, dry and untreated unless otherwise specified.

(4) Firmly affix the dummy to the seating surface through the pelvis at the hip joints by suitable clamps that also prevent any relative motion with respect to the upper legs during the test in § 572.65(c)(3) of this part. Install a pull attachment at the neck to torso juncture as shown in Figure 18 of § 572.21.

(5) Flex the thorax forward 50 degrees and then rearward as necessary to return it to its initial position.

(6) Apply a forward pull force in the midsagittal plane at the top of the

neck adapter so that at 40 degrees of the lumbar spine flexion the applied force is perpendicular to the thoracic spine box. Apply the force at any torso deflection rate between 0.5 and 1.5 degrees per second up to 40 degrees of flexion but no further; maintain 40 degrees of flexion for 10 seconds, and record the highest applied force during that time. Release all force as rapidly as possible and measure the return angle three minutes after release.

§ 572.86 Test conditions and dummy adjustment.

(a) With the complete torso on its back lying on a horizontal surface and the neck assembly mounted and shoulders on the edge of the surface, adjust the neck such that the head bolt is lowered 0.40 ±0.05 inches (10 ±1 mm) after a vertically applied load of 11.25 pounds (50 N) applied to the head bolt is released.

(b) With the complete torso on its back with the adjusted neck assembly as specified in § 572.66(a), and lying on a horizontal surface with the shoulders on the edge of the surface, mount the head and tighten the head bolt and nut firmly, with the head in horizontal position. Adjust the head joint at the force between 1–2g, which just supports the head's weight.

(c) Using the procedures described below, limb joints are set at the force between 1–2g, which just supports the limbs' weight when the limbs are extended horizontally forward:

(1) With the complete torso lying with its front down on a horizontal surface, with the hip joint just over the edge of the surface, mount the upper leg and tighten hip joint nut firmly. Adjust the hip joint by releasing the hip joint nut until the upper leg just starts moving.

(2) With the complete torso and upper leg lying with its front up on a horizontal surface, with the knee joint just over the edge of the surface, mount the lower leg and tighten knee joint firmly. Adjust the knee joint by releasing the knee joint nut until the lower leg just starts moving.

(3) With the torso in an upright position, mount the upper arm and tighten firmly the adjustment bolts for the shoulder joint with the upper arm placed in a horizontal position. Adjust the shoulder joint by releasing the shoulder joint nut until the upper arm just starts moving.

(4) With the complete torso in an upright position and upper arm in a vertical position, mount the forearm in a horizontal position and tighten the elbow hinge bolt and nut firmly. Adjust the elbow joint nut until the forearm just starts moving.

(d) With the torso assembled in an upright position, the adjustment nut for the lumbar vertebrae is tightened until the spring is compressed to ⅔ of its unloaded length.

(e) Performance tests are conducted at any temperature from 66 to 78 degrees F and at any relative humidity from 10 percent to 70 percent after exposure of the dummy to these conditions for a period of not less than four hours.

(f) Performance tests of the same component, segment, assembly or fully assembled dummy are separated in time by a period of not less than 20 minutes unless otherwise specified.

(g) Surfaces of the dummy components are not painted except as specified in the part or in drawings incorporated by this part.

Subpart K—Newborn Infant

SOURCE: 58 FR 3232, Jan. 8, 1993, unless otherwise noted.

§ 572.90 Incorporation by reference.

(a) The drawings and specifications referred to in § 572.91(a) are hereby incorporated in subpart K by reference. These materials are thereby made part of this regulation. The Director of the Federal Register approved that materials incorporated by reference in accordance with 5 U.S.C. 552(a) and 1 CFR part 51. Copies of the materials may be inspected at NHTSA's Docket Section, 400 Seventh Street, SW., room 5109, Washington, DC, or at the National Archives and Records Administration (NARA). For information on the availability of this material at NARA, call 202–741–6030, or go to: *http://www.archives.gov/federal_register/code_of_federal_regulations/ibr_locations.html.*

(b) The incorporated material is available as follows:

(1) Drawing numbers 126–0000 through 126–0015 (sheets 1 through 3), 126–0017 through 126–0027, and a parts list entitled ''Parts List for CAMI Newborn Dummy,'' are available from Reprographic Technologies, 1111 14th Street, NW., Washington, DC 20005. (202) 628–6667.

(2) A construction manual entitled, ''Construction of the Newborn Infant Dummy'' (July 1992) is available from Reprographic Technologies at the address in paragraph (b)(1) of this section.

§572.91 General description.

(a) The representative newborn infant dummy consists of a drawings and specifications package that contains the following materials:

(1) Drawing numbers 126–0000 through 126–0015 (sheets 1 through 3), 126–0017 through 126–0027, and a parts list entitled ''Parts List for CAMI Newborn Dummy''; and,

(2) A construction manual entitled, ''Construction of the Newborn Infant Dummy'' (July 1992).

(b) The structural properties of the dummy are such that the dummy conforms to this part in every respect both before and after being used in dynamic tests specified in Standard No. 213 of this chapter (§571.213).

Subpart L—Free Motion Headform

SOURCE: 60 FR 43058, Aug. 18, 1995, unless otherwise noted.

§572.100 Incorporation by Reference.

(a) The drawings and specifications referred to in §572.101 are hereby incorporated in subpart L by reference. These materials are thereby made part of this regulation. The Director of the Federal Register approved the materials incorporated by reference in accordance with 5 U.S.C. 552(a) and 1 CFR part 51. Copies of the materials may be inspected at NHTSA's Docket Section, 400 Seventh Street, S.W., room 5109, Washington, DC, or at the National Archives and Records Administration (NARA). For information on the availability of this material at NARA, call 202–741–6030, or go to: *http://www.archives.gov/federal_register/code_of_federal_regulations/ibr_locations.html.*

(b) The incorporated material is available as follows:

(1) Drawing number 92041–001, ''Head Form Assembly,'' (November 30, 1992); drawing number 92041–002, ''Skull Assembly,'' (November 30, 1992); drawing number 92041–003, ''Skull Cap Plate Assembly,'' (November 30, 1992); drawing number 92041–004, ''Skull Cap Plate,'' (November 30, 1992); drawing number 92041–005, ''Threaded Pin,'' (November 30, 1992); drawing number 92041–006, ''Hex Nut,'' (November 30, 1992); drawing number 92041–008, ''Head Skin without Nose,'' (November 30, 1992, as amended March 6, 1995); drawing number 92041–009, ''Six-Axis Load Cell Simulator Assembly,'' (November 30, 1992); drawing number 92041–011, ''Head Ballast Weight,'' (November 30, 1992); drawing number 92041–018, ''Head Form Bill of Materials,'' (November 30, 1992); drawing number 78051–148, ''Skull-Head (cast) Hybrid III,'' (May 20, 1978, as amended August 17, 1978); drawing number 78051–228/78051–229, ''Skin- Hybrid III,'' (May 20, 1978, as amended through September 24, 1979); drawing number 78051–339, ''Pivot Pin-Neck Transducer,'' (May 20, 1978, as amended May 14, 1986); drawing number 78051–372, ''Vinyl Skin Formulation Hybrid III,'' (May 20, 1978); and drawing number C–1797, ''Neck Blank, (August 1, 1989); drawing number SA572–S4, ''Accelerometer Specification,'' (November 30, 1992), are available from Reprographic Technologies, 1111 14th Street, N.W., Washington, DC 20005.

(2) A user's manual entitled ''Free-Motion Headform User's Manual,'' version 2, March 1995, is available from NHTSA's Docket Section at the address in paragraph (a) of this section.

(3) SAE Recommended Practice J211, OCT 1988, ''Instrumentation for Impact Tests,'' Class 1000, is available from The Society of Automotive Engineers, Inc., 400 Commonwealth Drive, Warrendale, PA 15096.

§572.101 General description.

(a) The free motion headform consists of the component assembly which is shown in drawings 92041–001 (incorporated by reference; see §572.100), 92041–002 (incorporated by reference;

see § 572.100), 92041–003 (incorporated by reference; see § 572.100), 92041–004 (incorporated by reference; see § 572.100), 92041–005 (incorporated by reference; see § 572.100), 92041–006 (incorporated by reference; see § 572.100), 92041–008 (incorporated by reference; see § 572.100), 92041–009 (incorporated by reference; see § 572.100), 92041–011 (incorporated by reference; see § 572.100), 78051–148 (incorporated by reference; see § 572.100), 78051–228/78051–229 (incorporated by reference; see § 572.100), 78051–339 (incorporated by reference; see § 572.100), 78051–372 (incorporated by reference; see § 572.100), C–1797 (incorporated by reference; see § 572.100), and SA572–S4 (incorporated by reference; see § 572.100).

(b) Disassembly, inspection, and assembly procedures, and sign convention for the signal outputs of the free motion headform accelerometers, are set forth in the Free-Motion Headform User's Manual (incorporated by reference; see § 572.100).

(c) The structural properties of the headform are such that it conforms to this part in every respect both before and after being used in the test specified in Standard No. 201 of this chapter (§ 571.201).

(d) The outputs of accelerometers installed in the headform are recorded in individual data channels that conform to the requirements of SAE Recommended Practice J211, OCT 1988, ''Instrumentation for Impact Tests,'' Class 1000 (incorporated by reference; see § 572.100).

§ 572.102 Drop test.

(a) When the headform is dropped from a height of 14.8 inches in accordance with paragraph (b) of this section, the peak resultant accelerations at the location of the accelerometers mounted in the headform as shown in drawing 92041–001 (incorporated by reference; see § 572.100) shall not be less than 225g, and not more than 275g. The acceleration/time curve for the test shall be unimodal to the extent that oscillations occurring after the main acceleration pulse are less than ten percent (zero to peak) of the main pulse. The lateral acceleration vector shall not exceed 15g (zero to peak).

(b) *Test procedure.* (1) Soak the headform in a test environment at any temperature between 19 degrees C. to 26 degrees C. and at a relative humidity from 10 percent to 70 percent for a period of at least four hours prior to its use in a test.

(2) Clean the headform's skin surface and the surface of the impact plate with 1,1,1 Trichloroethane or equivalent.

(3) Suspend the headform, as shown in Figure 50. Position the forehead below the chin such that the skull cap plate is at an angle of 28.5 ±0.5 degrees with the impact surface when the midsagittal plane is vertical.

(4) Drop the headform from the specified height by means that ensure instant release onto a rigidly supported flat horizontal steel plate, which is 2 inches thick and 2 feet square. The plate shall have a clean, dry surface and any microfinish of not less than 8 microinches 203.2×10^{-6} mm (rms) and not more than 80 microinches 2032×10^{-6} mm (rms).

(5) Allow at least 3 hours between successive tests on the same headform.

§ 572.103 Test conditions and instrumentation.

(a) Headform accelerometers shall have dimensions, response characteristics, and sensitive mass locations specified in drawing SA572–S4 (incorporated by reference; see § 572.100) and be mounted in the headform as shown in drawing 92041–001 (incorporated by reference; see § 572.100).

(b) The outputs of accelerometers installed in the headform are recorded in individual data channels that conform to the requirements of SAE Recommended Practice J211, OCT 1988, ''Instrumentation for Impact Tests,'' Class 1000 (incorporated by reference; see § 572.100).

(c) Coordinate signs for instrumentation polarity conform to the sign convention shown in the Free-Motion Headform User's Manual (incorporated by reference; see § 572.100).

(d) The mountings for accelerometers shall have no resonant frequency within a range of 3 times the frequency range of the applicable channel class.

Figure 50

HEADFORM DROP TEST
Set-Up Specifications

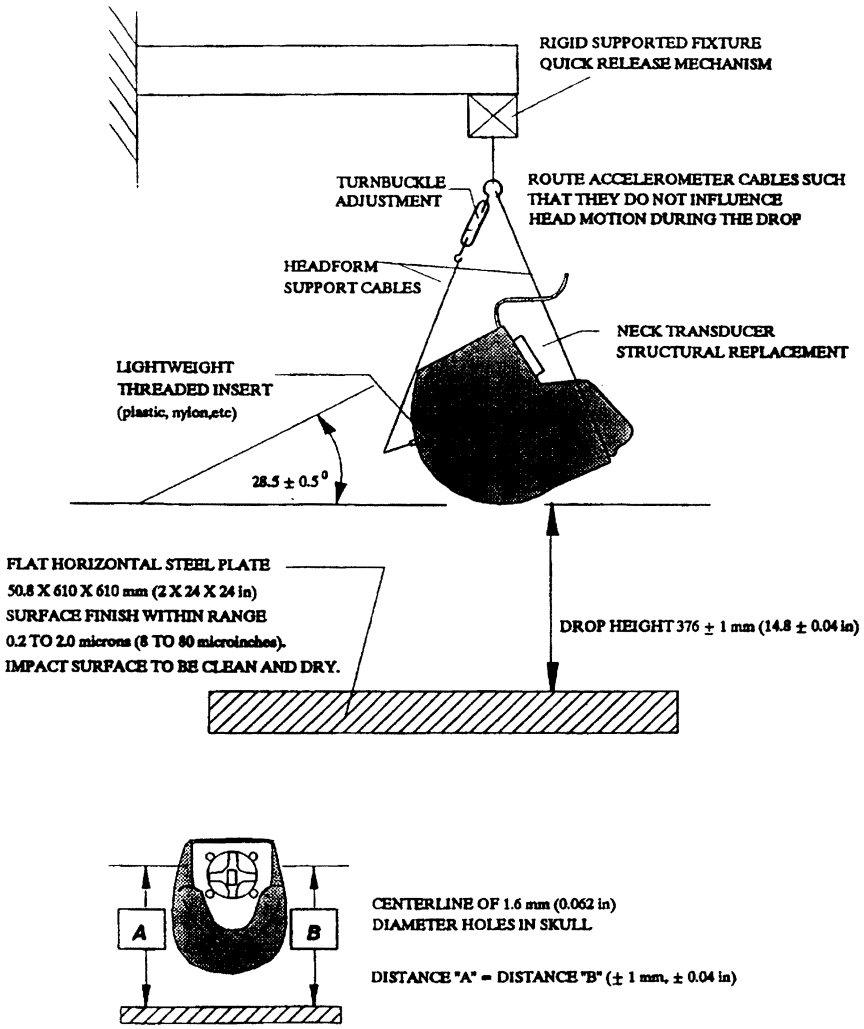

[60 FR 43060, Aug. 18, 1995]

Subpart M—Side Impact Hybrid Dummy 50th Percentile Male

SOURCE: 63 FR 41470, Aug. 4, 1998, unless otherwise noted.

§ 572.110 Materials incorporated by reference.

(a) The following materials are hereby incorporated by reference in Subpart M:

(1) The Anthropomorphic Test Dummy Parts List, SID/Hybrid III part 572, subpart M, dated May 10, 1997.

(2) The SID/Hybrid III Part 572 Subpart M User's Manual, dated May 1997.

(3) Drawing number 96–SIDH3–001, titled, ''Head-Neck Bracket,'' dated August 30, 1996.

(4) Drawing number 96–SIDH3–006, titled, ''Upper and Middle Shoulder Foam,'' dated May 10, 1997.

(5) Drawing number SA-SIDH3-M001, titled, ''Complete Assembly SIDH3,'' dated April 19, 1997.

(6) Drawing number 78051–61X, Revision C, titled ''Head Assembly—complete,'' dated March 28, 1997

(7) Drawing number 78051–90, Revision A, titled ''Neck Assembly—complete,'' dated May 20, 1978.

(8) Dummy assembly drawing number SA-SID-M030, Revision A, titled ''Thorax Assembly—complete,'' dated May 18, 1994.

(9) Dummy assembly drawing SA-SID-M050, revision A, titled ''Lumbar Spine Assembly,'' dated May 18, 1994.

(10) Dummy assembly drawing SA–150 M060, revision A, titled ''Pelvis and Abdomen Assembly,'' dated May 18, 1994.

(11) Dummy assembly drawing SA-SID-053, revision A, titled ''Lumbar Spine Assembly,'' dated May 18, 1994.

(12) Dummy assembly drawing SA-SID-M080, titled ''Leg Assembly, Right,'' dated August 13, 1987.

(13) Dummy assembly drawing SA-SID-M081, titled ''Leg Assembly, Left,'' dated August 13, 1987.

(14) Drawing number 78051–383X, Revision P, titled ''Neck Transducer Structural Replacement,'' dated November 1, 1995.

(15) The Society of Automotive Engineers (SAE) J1733 Information Report, titled ''Sign Convention for Vehicle Crash Testing,'' dated December 1994.

(16) SAE Recommended Practice J211, ''Instrumentation for Impact Tests,'' Parts 1 and 2, dated March 1995.

(b) The incorporated materials are available as follows:

(1) The Director of the Federal Register approved those materials incorporated by reference in accordance with 5 U.S.C. 552(a) and 1 CFR part 51. Copies of the materials may be inspected at NHTSA's Docket Section, 400 Seventh Street S.W., room 5109, Washington, DC, or at the National Archives and Records Administration (NARA). For information on the availability of this material at NARA, call 202–741–6030, or go to: *http://www.archives.gov/federal_register/code_of_federal_regulations/ibr_locations.html.*

(2) The parts lists, user's manual and drawings referred to in paragraphs (a)(1) through (a)(14) of this section are available from Reprographic Technologies, 9000 Virginia Manor Road, Beltsville, MD 20705 (301) 419–5070.

(3) The SAE materials referred to in paragraphs (a)(15) and (a)(16) of this section are available from the Society of Automotive Engineers, Inc., 400 Commonwealth Drive, Warrendale, PA 15096.

§ 572.111 General description.

(a) The dummy consists of component parts and component assemblies defined in drawing SA-SIDH3-M001, dated April 19, 1997, which are described in approximately 200 drawings and specifications that are set forth in §§ 572.32, 572.33 and 572.41(a)(3),(4),(5) and (6) of this part, and in the drawing of the Adaptor Bracket 96–SIDH3–001.

(1) The head assembly consists of the assembly specified in subpart E (§ 572.32) and conforms to each of the drawings subtended under drawing 78051–61X rev. C.

(2) The neck assembly consists of the assembly specified in subpart E (§ 572.33) and conforms to each of the drawings subtended under drawing 78051–90 rev. A.

(3) The thorax assembly consists of the assembly shown as number SID 053 and conforms to each applicable drawing subtended by number SA-SID M030 rev. A.

(4) The lumbar spine consists of the assembly specified in subpart B (§572.9(a)) and conforms to drawing SA 150 M050 and drawings subtended by SA-SID M050 rev. A.

(5) The abdomen and pelvis consist of the assembly and conform to the drawings subtended by SA 150 M060, the drawings subtended by SA 150 M060 rev. A and the drawings subtended by SA-SID-087 sheet 1 rev. H, and SA-SID-87 sheet 2 rev. H.

(6) The lower limbs consist of the assemblies specified in Subpart B (§572.10) shown as SA 150 M080 and SA 150 M081 in Figure 1 and SA-SID-M080 and SA-SID-M081 and conform to the drawings subtended by those numbers.

(7) The neck mounting adaptor bracket conforms to drawing 96–SIDH3–001.

(8) Upper and middle shoulder foams conform to drawing 96–SIDH3–006.

(b) The structural properties of the dummy are such that the dummy conforms to the specifications of this subpart in every respect before being used in vehicle tests specified in Standard 201.

(c) Disassembly, inspection and assembly procedures, external dimensions, weight and drawing list are set forth in the SIDH3 User's Manual, dated May 1997.

(d) Sign convention for signal outputs is given in the reference document SAE J1733 of 1994–12, ''Sign Convention for Vehicle Crash Testing.''

§572.112 Head assembly.

The head assembly consists of the head (drawing 78051–61X, rev. C) with the neck transducer structural replacement (drawing 78051–383X, rev. P) and three (3) accelerometers that are mounted in conformance to §572.36 (c).

(a) Test procedure. (1) Soak the head assembly in a test environment at any temperature between 18.9 and 25.6 degrees C. (66 to 78 degrees F.) and at a relative humidity between 10 percent and 70 percent for a period of at least four (4) hours prior to its application in a test.

(2) Clean the impact surface of the head skin and impact plate surface, described in paragraph (a)(4) of this section, with 1,1,1 trichloroethane or equivalent prior to the test.

(3) Suspend the head, as shown in Figure 51, so that the midsagittal plane makes an angle of 35 ±1 degrees with the impact surface and its anterior-posterior axis is horizontal ±1 degree.

(4) Drop the head from a height of 200 ±0.25 mm (7.87 ±0.01 inches), measured from the lowest point on the head, by a means that ensures a smooth, clean release into a rigidly supported flat horizontal steel plate, which is 51 ±2 mm (2.0 ±0.01 in.) thick and 610 ±10 mm (24.0 ±0.4 in) square. The plate shall have a dry surface and shall have a microfinish of 0.2 microns (8 microinches) to 2.0 microns (80 microinches).

(5) Allow at least two (2) hours between successive tests on the same head.

(b) Performance criteria. (1) When the head assembly is dropped in accordance with §572.112(a), the measured peak resultant acceleration shall be between 120 and 150 G's.

(2) The resultant acceleration-time curve shall be unimodal to the extent that oscillations occurring after the main acceleration pulse shall not exceed 15 percent (zero to peak) of the main pulse. The longitudinal acceleration vector shall not exceed 15 G's.

Figure 51

HEAD DROP TEST

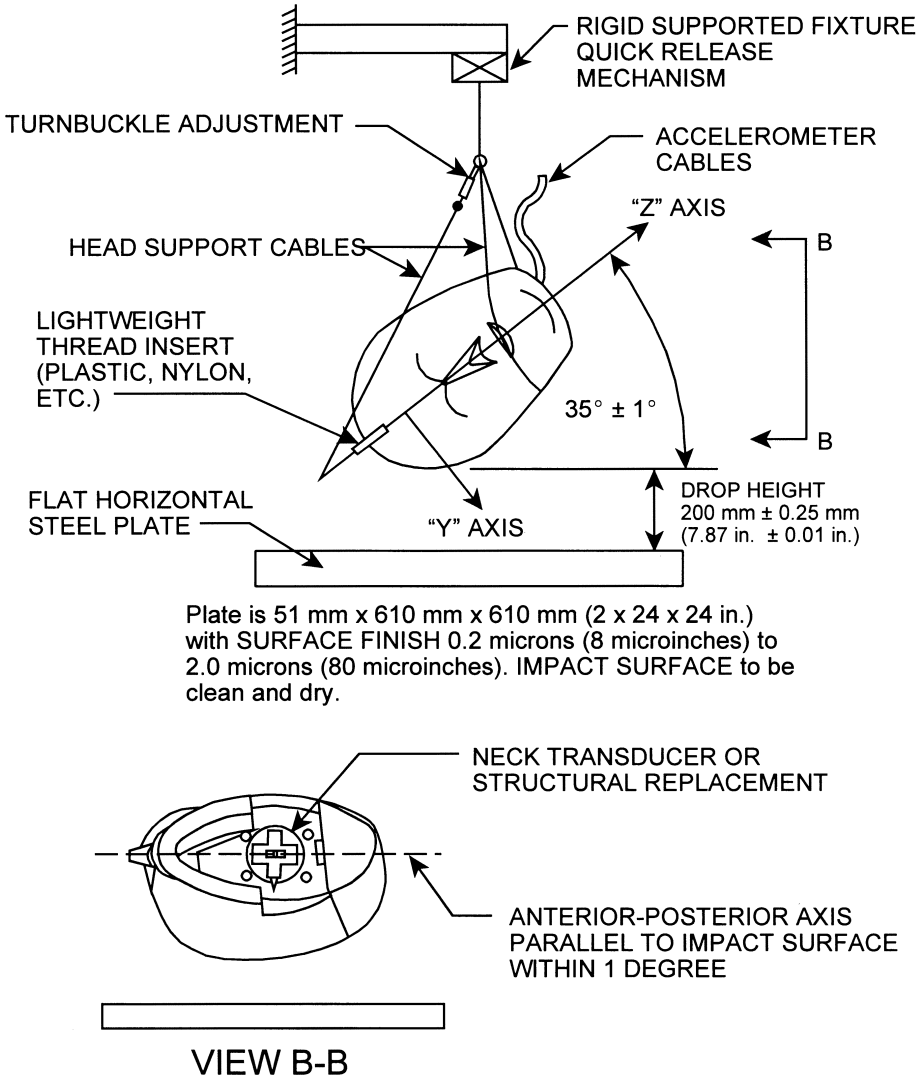

§ 572.113 Neck assembly.

The head/neck assembly consists of the parts 78051–61X, rev. C; –84; –90, rev. A; –94; –98; –104, revision F; –303, rev. E;—305; –306; –307, rev. X and has a six axis neck transducer (drawing C–1709, revision D) installed in conformance with § 572.36(d).

(a) Test procedure. (1) Soak the head and neck assembly in a test environment at any temperature between 20.6 and 22.2 degrees C. (69 to 72 degrees F.) and at any relative humidity between 10 percent and 70 percent for a period of at least four (4) hours prior to its application in a test.

(2) Torque the jamnut (78051–64) on the neck cable (78051–301, rev. E) to 1.35 ±0.27 Nm (1.0 ±0.2 ft-lb) before each test.

(3) Using neck brackets 78051–303 and –307, mount the head/neck assembly to the part 572 pendulum test fixture (see §572.33, Figure 22,) so that the midsagittal plane of the head is vertical and perpendicular to the plane of motion of the pendulum's longitudinal centerline (see §572.33, Figure 20, except that the direction of the head/neck assembly is rotated around the superior-inferior axis by an angle of 90 degrees). Install suitable transducers or other devices necessary for measuring the ''D'' plane (horizontal surface at the base of the skull) rotation with respect to the pendulum's longitudinal centerline. The rotation can be measured by placing a transducer at the occipital condyles and another at the intersection of the centerline of the neck and the line extending from the base of the neck as shown in figure 52.

(4) Release the pendulum and allow it to fall freely from a height to achieve an impact velocity of 6.89 to 7.13 m/s (22.6 to 23.4 ft/sec) measured at the center of the pendulum accelerometer.

(5) Allow the neck to flex without the head or neck contacting any object during the test.

(6) Time zero is defined as the time of initial contact between the striker plate and the pendulum deceleration medium.

(7) Allow a period of at least thirty (30) minutes between successive tests on the same neck assembly.

(b) Performance criteria. (1) The pendulum deceleration pulse is to be characterized in terms of decrease in velocity as obtained by integrating the pendulum acceleration output.

Time (ms)	Pendulum Delta-V (m/s)
10	1.96 to 2.55.
20	4.12 to 5.10.
30	5.73 to 7.01.
40 to 70	6.27 to 7.64.

(2) The maximum rotation of the midsagittal plane of the head shall be 66 to 82 degrees with respect to the pendulum's longitudinal centerline. The decaying head rotation vs. time curve shall cross the zero angle between 58 to 67 ms after reaching its peak value.

(3) The moment about the x-axis which coincides with the midsagittal plane of the head at the level of the occipital condyles shall have a maximum value between 73 and 88 Nm. The decaying moment vs. time curve shall first cross zero moment between 49 and 64 ms after reaching its peak value. The following formula is to be used to calculate the moment about the occipital condyles when using the six-axis neck transducer:

$$M = Mx + 0.01778\ Fy$$

Where Mx and Fy are the moment and force measured by the transducer and expressed in terms of Nm and N, respectively.

(4) The maximum rotation of the head with respect to the pendulum's longitudinal centerline shall occur between 2 and 16 ms after peak moment.

[63 FR 41470, Aug. 4, 1998, as amended at 66 FR 51882, Oct. 11, 2001]

§572.114 Thorax.

The specifications and test procedure for the thorax for the SID/HIII dummy are identical to those applicable to the SID dummy as set forth in §572.42 except that the reference to the SID device found in §572.42(a), (SA-SID-M001A revision A, dated May 18, 1994) does not apply and the reference to the SID/HIII (SA-SIDH3-M001, dated April 19, 1997) is applied in its place.

Figure 52

NECK PENDULUM TEST

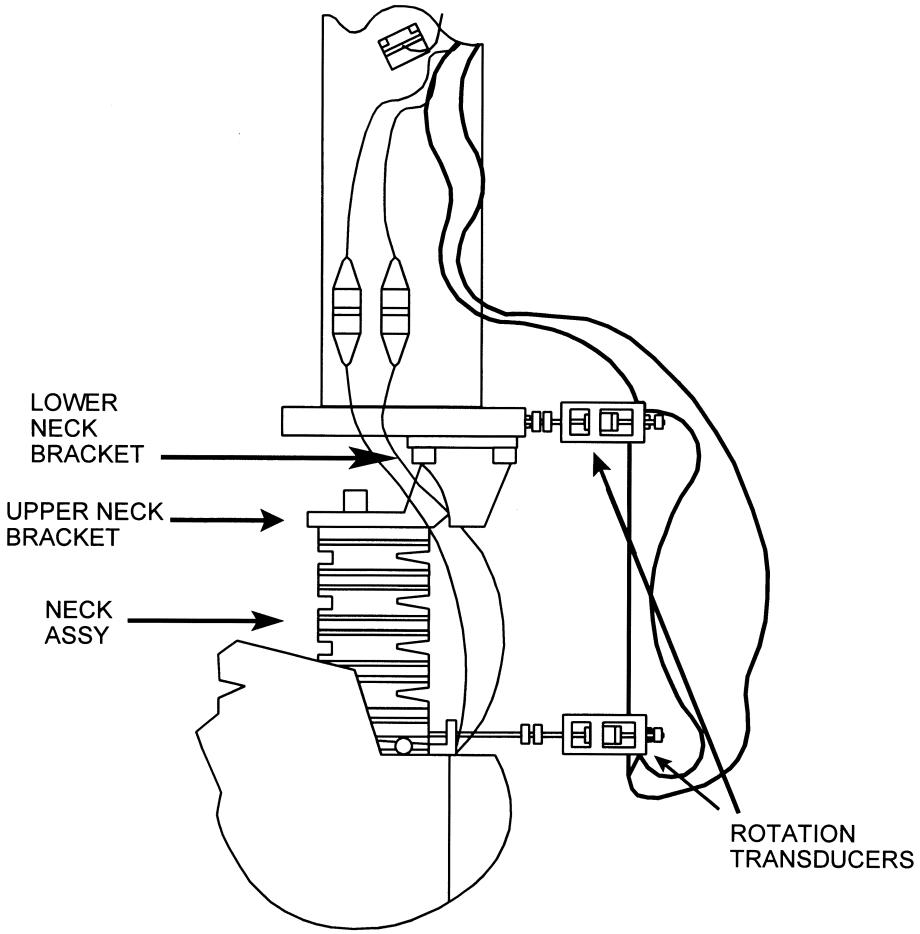

§ 572.115 Lumbar spine and pelvis.

The specifications and test procedure for the lumbar spine and pelvis are identical to those for the SID dummy as set forth in § 572.42 except that the reference to the SID device found in § 572.42(a), (SA-SID-M001A revision A, dated May 18, 1994) does not apply and the reference to the SID/HIII (SA-SIDH3-M001, dated April 19, 1997) is applied in its place.

§ 572.116 Instrumentation and test conditions.

(a) The test probe for lateral thoracic and pelvis impact tests are the same as those specified in § 572.44(a).

(b) Accelerometer mounting in the thorax is the same as specified in § 572.44(b).

(c) Accelerometer mounting in the pelvis is the same as specified in § 572.44(c).

(d) Head accelerometer mounting is the same as specified in § 572.36(c).

(e) Neck transducer mounting is the same as specified in § 572.36(d).

(f) Instrumentation and sensors used must conform to SAE Recommended Practice J211, March 1995, ''Instrumentation for Impact Tests.''

(g) The mountings for the spine, rib and pelvis accelerometers shall have no resonance frequency within a range of 3 times the frequency range of the applicable channel class.

(h) Limb joints of the test dummy shall be set at the force between 1 to 2 g's, which just supports the limb's weight when the limbs are extended horizontally forward. The force required to move a limb segment does not exceed 2 g's throughout the range of the limb motion.

(i) Performance tests must be conducted at a temperature between 20.6 and 22.2 degrees C. (69 to 72 degrees F.) and at a relative humidity between 10 percent and 70 percent after exposure of the dummy to those conditions for a period of at least four (4) hours.

(j) For the performance of tests specified in § 572.114 and § 572.115, the dummy is positioned the same as specified in § 572.44(h).

Subpart N—Six-year-old Child Test Dummy, Beta Version

SOURCE: 65 FR 2065, Jan. 13, 2000, unless otherwise noted.

§ 572.120 Incorporation by reference.

(a) The following materials are hereby incorporated into this subpart by reference:

(1) A drawings and inspection package entitled ''Parts List and Drawings, Hybrid III Six-year-old Child Test Dummy (H-III6C, Beta Version) (June 2002)'', consisting of:

(i) Drawing No. 127–1000, 6-year H3 Head Complete,

(ii) Drawing No. 127–1015, Neck Assembly,

(iii) Drawing No. 127–2000, Upper Torso Assembly,

(iv) Drawing No. 127–3000, Lower Torso Assembly,

(v) Drawing No. 127–4000–1 and 4000–2, Leg Assembly,

(vi) Drawing No. 127–5000–1 and 5000–2, Arm Assembly, and

(vii) The Hybrid III Six-year-old Child Parts/Drawing List.

(2) A procedures manual entitled ''Procedures for Assembly, Disassembly, and Inspection (PADI) of the Hybrid III 6-year-old Child Crash Test Dummy (H-III6C), Beta Version, June 2002'';

(3) SAE Recommended Practice J211–1995 Instrumentation for Impact Tests—Parts 1 and 2, dated March, 1995'';

(4) SAE J1733 Information Report, titled ''Sign Convention for Vehicle Crash Testing'', dated December 1994.

(b) The Director of the Federal Register approved those materials incorporated by reference in accordance with 5 U.S.C. 552(a) and 1 CFR part 51. Copies of the materials may be inspected at NHTSA's Technical Reference Library, 400 Seventh Street SW., room 5109, Washington, DC, or at the National Archives and Records Administration (NARA). For information on the availability of this material at NARA, call 202–741–6030, or go to: *http://www.archives.gov/federal_register/code_of_federal_regulations/ibr_locations.html.*

(c) The incorporated materials are available as follows:

(1) The drawings and specifications package and the PADI document referred to in subparagraph (a) are accessible for viewing and copying at the Department of Transportation Docket's public area, Plaza 401, 400 Seventh St., SW., Washington, DC 20590, and may be downloaded from dms.dot.gov. They are also available from Reprographic Technologies, 9107 Gaither Rd, Gaithersburg, MD 200877, (301) 419–5070.

(2) The SAE materials referred to in paragraphs (a)(3) and (a)(4) of this section are available from the Society of

Automotive Engineers, Inc., 400 Commonwealth Drive, Warrendale, PA 15096.

[65 FR 2065, Jan. 13, 2000, as amended at 67 FR 47327, July 18, 2002]

§ 572.121 General description.

(a) The Hybrid III type 6-year-old dummy is defined by drawings and specifications containing the following materials:

(1) Technical drawings and specifications package P/N 127–0000, the titles of which are listed in Table A;

(2) Procedures for Assembly, Disassembly, and Inspection (PADI) of the Hybrid III 6-year-old test dummy, Alpha version (August 1999).

TABLE A

Component assembly	Drawing number
Head assembly	127–1000
Neck assembly	127–1015
Upper torso assembly	127–2000
Lower torso assembly	127–3000
Leg assembly	127–4000
Arm assembly	127–5000

(b) Adjacent segments are joined in a manner such that except for contacts existing under static conditions, there is no contact between metallic elements throughout the range of motion or under simulated crash impact conditions.

(c) The structural properties of the dummy are such that the dummy must conform to this Subpart in every respect before use in any test similar to those specified in Standard 208, ''Occupant Crash Protection'', and Standard 213, ''Child Restraint Systems''.

§ 572.122 Head assembly and test procedure.

(a) The head assembly for this test consists of the complete head (drawing 127–1000), a six-axis neck transducer (drawing SA572–S11) or its structural replacement (drawing 78051–383X), a head to neck-to-pivot pin (drawing 78051–339), and 3 accelerometers (drawing SA572–S4).

(b) When the head assembly in paragraph (a) of this section is dropped from a height of 376.0 ±1.0 mm (14.8 ±0.04 in) in accordance with paragraph (c) of this section, the peak resultant acceleration at the location of the accelerometers at the head CG may not be less than 245 G or more than 300 G. The resultant acceleration vs. time history curve shall be unimodal; oscillations occurring after the main pulse must be less than 10 percent of the peak resultant acceleration. The lateral acceleration shall not exceed 15 g's (zero to peak).

(c) *Head test procedure*. The test procedure for the head is as follows:

(1) Soak the head assembly in a controlled environment at any temperature between 18.9 and 25.6 °C (66 and 78 °F) and a relative humidity from 10 to 70 percent for at least four hours prior to a test.

(2) Prior to the test, clean the impact surface of the skin and the impact plate surface with isopropyl alcohol, trichloroethane, or an equivalent. The skin of the head must be clean and dry for testing.

(3) Suspend the head assembly as shown in Figure N1. The lowest point on the forehead must be 376.0 ±1.0 mm (14.8 ±0.04 in) from the impact surface and the head must be oriented to an incline of 62 ±1 deg. between the ''D'' plane as shown in Figure N1 and the plane of the impact surface. The 1.57 mm (0.062 in) diameter holes located on either side of the dummy's head shall be used to ensure that the head is level with respect to the impact surface.

(4) Drop the head assembly from the specified height by means that ensure a smooth, instant release onto a rigidly supported flat horizontal steel plate which is 50.8 mm (2 in) thick and 610 mm (24 in) square. The impact surface shall be clean, dry and have a micro finish of not less than $203.2. \times 10^{-6}$ mm (8 micro inches) (RMS) and not more than 2032.0×10^{-6} mm (80 micro inches) (RMS).

(5) Allow at least 2 hours between successive tests on the same head.

§ 572.123 Neck assembly and test procedure.

(a) The neck assembly for the purposes of this test consists of the assembly of components shown in drawing 127–1015.

(b) When the head-neck assembly consisting of the head (drawing 127–1000), neck (drawing 127–1015), pivot pin (drawing 78051–339), bib simulator

(drawing TE127–1025, neck bracket assembly (drawing 127–8221), six-axis neck transducer (drawing SA572–S11), neck mounting adaptor (drawing TE–2208–001), and three accelerometers (drawing SA572–S4) installed in the head assembly as specified in §572.122, is tested according to the test procedure in paragraph (c) of this section, it shall have the following characteristics:

(1) *Flexion*. (i) Plane D, referenced in Figure N2, shall rotate in the direction of preimpact flight with respect to the pendulum's longitudinal centerline between 74 degrees and 92 degrees. Within this specified rotation corridor, the peak moment about the occipital condyles shall be not less than 27 N-m (19.9 ft-lbf) and not more than 33 N-m (24.3 ft-lbf).

(ii) The positive moment shall decay for the first time to 5 N-m (3.7 ft-lbf) between 103 ms and 123 ms.

(iii) The moment shall be calculated by the following formula: Moment (N-m) = $M_y - (0.01778m) \times (F_X)$.

(iv) M_y is the moment about the y-axis and F_X is the shear force measured by the neck transducer (drawing SA572–S11) and 0.01778m is the distance from force to occipital condyle.

(2) *Extension*. (i) Plane D, referenced in Figure N3, shall rotate in the direction of preimpact flight with respect to the pendulum's longitudinal centerline between 85 degrees and 103 degrees. Within this specified rotation corridor, the peak moment about the occipital condyles shall be not more than −19 N-m (−14 ft-lbf) and not less than −24 N-m (−17.7ft-lbf).

(ii) The negative moment shall decay for the first time to −5 N-m (−3.7 ft-lbf) between 123 ms and 147 ms.

(iii) The moment shall be calculated by the following formula: Moment (N-m)=$M_y - (0.01778m) \times (F_X)$.

(iv) M_y is the moment about the y-axis and F_X is the shear force measured by the neck transducer (drawing SA572–S11) and 0.017778m is the distance from force to occipital condyle.

(3) Time-zero is defined as the time of initial contact between the pendulum striker plate and the honeycomb material.

(c) *Test procedure*. The test procedure for the neck assembly is as follows:

(1) Soak the neck assembly in a controlled environment at any temperature between 20.6 and 22.2 °C (69 and 72 °F) and a relative humidity between 10 and 70 percent for at least four hours prior to a test.

(2) Torque the jam nut (drawing 9000341) on the neck cable (drawing 127–1016) to 0.23 ±0.02 N-m (2.0 ±0.2 in-lbs).

(3) Mount the head-neck assembly, defined in paragraph (b) of this section, on the pendulum so the midsagittal plane of the head is vertical and coincides with the plane of motion of the pendulum as shown in Figure N2 for flexion tests and Figure N3 for extension tests.

(4) Release the pendulum and allow it to fall freely from a height to achieve an impact velocity of 4.95 ±0.12 m/s (16.2 ±0.4 ft/s) for flexion tests and 4.3 ±0.12 m/s (14.10 ±0.40 ft/s) for extension tests, measured by an accelerometer mounted on the pendulum as shown in Figure 22 of 49 CFR 572 at the instant of contact with the honey comb.

(i) Time-zero is defined as the time of initial contact between the pendulum striker plate and the honeycomb material. All data channels should be at the zero level at this time.

(ii) Stop the pendulum from the initial velocity with an acceleration vs. time pulse which meets the velocity change as specified below. Integrate the pendulum acceleration data channel to obtain the velocity vs. time curve:

TABLE B

Time	Pendulum pulse			
	Flexion		Extension	
ms	m/s	ft/s	m/s	ft/s
10	1.2–1.6	3.9–5.3	1.0–1.4	3.3–4.6
20	2.4–3.4	7.9–11.2	2.2–3.0	7.2–9.8
30	3.8–5.0	12.5–16.4	3.2–4.2	10.5–13.8

§ 572.124 Thorax assembly and test procedure.

(a) *Thorax (upper torso) assembly*. The thorax consists of the part of the torso assembly shown in drawing 127–2000.

(b) When the anterior surface of the thorax of a completely assembled dummy (drawing 127–0000) is impacted by a test probe conforming to section 572.127(a) at 6.71 ±0.12 m/s (22.0 ±0.4 ft/s) according to the test procedure in paragraph (c) of this section:

(1) The maximum sternum displacement (compression) relative to the spine, measured with chest deflection transducer (drawing SA572-S50), must be not less than 38.0 mm (1.50 in) and not more than 46.0 mm (1.80 in). Within this specified compression corridor, the peak force, measured by the probe in accordance with section 572.127, shall not be less than 1150 N (259 lbf) and not more than 1380 N (310 lbf). The peak force after 12.5 mm (0.5 in) of sternum displacement but before reaching the minimum required 38.0 mm (1.5 in) sternum displacement limit shall not exceed 1500 N (337.2 lbf).

(2) The internal hysteresis of the ribcage in each impact as determined by the plot of force vs. deflection in paragraph (b)(1) of this section shall be not less than 65 percent but not more than 85 percent.

(c) *Test procedure*. The test procedure for the thorax assembly is as follows:

(1) Soak the dummy in a controlled environment at any temperature between 20.6° and 22.2 °C (69° and 72 °F) and a relative humidity between 10 and 70 percent for at least four hours prior to a test.

(2) Seat and orient the dummy, wearing tight-fitting underwear or equivalent consisting of a size 5 short-sleeved shirt having a weight less than 0.090 kg (0.2 lb) and an opening at the top just large enough to permit the passage of the head with a tight fit, and a size 4 pair of long pants having a weight of less than 0.090 kg (0.2 lb) with the legs cut off sufficiently above the knee to allow the knee target to be visible, on a seating surface without back support as shown in Figure N4, with the limbs extended horizontally and forward, parallel to the midsagittal plane, the midsagittal plane vertical within ±1 degree and the ribs level in the anterior-posterior and lateral directions within ±0.5 degrees.

(3) Establish the impact point at the chest midsagittal plane so that the impact point of the longitudinal centerline of the probe coincides with the midsagittal plane of the dummy within ±2.5 mm (0.1 in) and is 12.7 ±1.1 mm (0.5 ±0.04 in) below the horizontal-peripheral centerline of the No. 3 rib and is within 0.5 degrees of a horizontal line in the dummy's midsagittal plane.

(4) Impact the thorax with the test probe so that at the moment of contact the probe's longitudinal center line falls within 2 degrees of a horizontal line in the dummy's midsagittal plane.

(5) Guide the test probe during impact so that there is no significant lateral, vertical or rotational movement.

(6) No suspension hardware, suspension cables, or any other attachments to the probe, including the velocity vane, shall make contact with the dummy during the test.

[65 FR 2065, Jan. 13, 2000, as amended at 67 FR 47327, July 18, 2002]

§ 572.125 Upper and lower torso assemblies and torso flexion test procedure.

(a) *Upper/lower torso assembly*. The test objective is to determine the stiffness effects of the lumbar spine (drawing 127–3002), including cable (drawing 127–8095), mounting plate insert (drawing 910420–048), nylon shoulder bushing (drawing 9001373), nut (drawing 9001336), and abdominal insert (drawing 127–8210), on resistance to articulation between upper torso assembly (drawing 127–2000) and lower torso assembly (drawing 127–3000).

(b)(1) When the upper torso assembly of a seated dummy is subjected to a force continuously applied at the head to neck pivot pin level through a rigidly attached adaptor bracket as shown in Figure N5 according to the test procedure set out in paragraph (c) of this section, the lumbar spine-abdomen assembly shall flex by an amount that permits the upper torso assembly to translate in angular motion until the machined rear surface of the instrument cavity at the back of the thoracic spine box is at 45 ±0.5 degrees relative to the vertical transverse plane, at which time the force applied as shown

in Figure N5 must be not less than 147 N (33 lbf) and not more than 200 N (45 lbf), and

(2) Upon removal of the force, the torso assembly must return to within 8 degrees of its initial position.

(c) *Test procedure*. The test procedure for the torso assemblies is as follows:

(1) Soak the dummy in a controlled environment at any temperature between 18.9 and 25.6 °C (66 and 78 °F) and a relative humidity between 10 and 70 percent for at least four hours prior to a test.

(2) Attach the dummy (with or without the legs below the femurs) to the fixture in a seated posture as shown in Figure N5.

(3) Secure the pelvis at the pelvis instrument cavity rear face by threading four ¼ in cap screws into the available threaded attachment holes. Tighten the mountings so that the test material is rigidly affixed to the test fixture and the pelvic-lumbar joining surface is horizontal.

(4) Flex the thorax forward three times between vertical and until the torso reference plane, as shown in figure N5, reaches 30 ±2 degrees from vertical. Bring the torso to vertical orientation, remove all externally applied flexion forces, and wait 30 minutes before conducting the test. During the 30-minute waiting period, the dummy's upper torso shall be externally supported at or near its vertical orientation to prevent sagging.

(5) Remove the external support and wait two minutes. Measure the initial orientation of the torso reference plane of the seated, unsupported dummy as shown in Figure N5. This initial torso orientation angle may not exceed 22 degrees.

(6) Attach the loading adapter bracket to the spine of the dummy, the pull cable, and the load cell as shown in Figure N5.

(7) Apply a tension force in the midsagittal plane to the pull cable as shown in Figure N5 at any upper torso deflection rate between 0.5 and 1.5 degrees per second, until the torso reference plane is at 45 ±0.5 degrees of flexion relative to the vertical transverse plane as shown in Figure N5.

(8) Continue to apply a force sufficient to maintain 45 ±0.5 degrees of flexion for 10 seconds, and record the highest applied force during the 10-second period.

(9) Release all force as rapidly as possible, and measure the return angle at 3 minutes or any time thereafter after the release.

§ 572.126 Knees and knee impact test procedure.

(a) *Knee assembly*. The knee assembly is part of the leg assembly (drawing 127–4000–1 and –2).

(b) When the knee assembly, consisting of knee machined (drawing 127–4013), knee flesh (drawing 127–4011), lower leg (drawing 127–4014), the foot assembly (drawing 127–4030–1(left) and -2 (right)) and femur load transducer (drawing SA572-S10) or its structural replacement (drawing 127–4007) is tested according to the test procedure in section 572.127(c), the peak resistance force as measured with the test probe mounted accelerometer must be not less than 2.0 kN (450 lbf) and not more than 3.0 kN (674 lbf).

(c) *Test procedure*. The test procedure for the knee assembly is as follows:

(1) Soak the knee assembly in a controlled environment at any temperature between 18.9 and 25.6 °C (66 and 78 °F) and a relative humidity from 10 to 70 percent for at least four hours prior to a test.

(2) Mount the test material and secure it to a rigid test fixture as shown in Figure N6. No contact is permitted between any part of the foot or tibia and any exterior surface.

(3) Align the test probe so that throughout its stroke and at contact with the knee it is within 2 degrees of horizontal and collinear with the longitudinal centerline of the femur.

(4) Guide the pendulum so that there is no significant lateral vertical or rotational movement at time-zero.

(5) The test probe velocity at the time of contact shall be 2.1 ±0.03 m/s (6.9 # 0.1 ft/s).

(6) No suspension hardware, suspension cables, or any other attachments to the probe, including the velocity vane, shall make contact with the dummy during testing.

[65 FR 2065, Jan. 13, 2000, as amended at 67 FR 47328, July 18, 2002]

§ 572.127 Test conditions and instrumentation.

(a) The test probe for thoracic impacts, except for attachments, shall be of rigid metal or metal alloy construction and concentric about its longitudinal axis. Any attachments to the impactor, such as suspension hardware, velocity vanes, etc., must meet the requirements of § 572.124(c)(6). The impactor shall have a mass of 2.86 ±0.02 kg (6.3 ±0.05 lb) and a minimum mass moment of inertia of 160 kg-c^2 (0.141 lb-in-sec^2) in yaw and pitch about the CG of the probe. One third of the weight of suspension cables and any attachments to the impact probe must be included in the calculation of mass, and such components may not exceed five percent of the total weight of the probe. The impacting end of the probe, has a flat, continuous, and non-deformable 101.6 ±0.25 mm (4.00 ±0.01 in) diameter face with an edge radius of 7.6/12.7 mm (0.3/0.5 in). The impactor shall have a 101–103 mm (4.0–4.1 in) diameter cylindrical surface extending for a minimum of 12.5 mm (0.5 in) to the rear from the impact face. The probe's end opposite to the impact face has provisions for mounting an accelerometer with its sensitive axis collinear with the longitudinal axis of the probe. The impact probe shall have a free air resonant frequency of not less than 1000 Hz limited to the direction of the longitudinal axis of the impactor.

(b) The test probe for knee impacts, except for attachments, shall be of rigid metal or alloy construction and concentric about its longitudinal axis. Any attachments to the impactor, such as suspension hardware, velocity vanes, etc., must meet the requirements of § 572.126(c)(6). The impactor shall have a mass of 0.82 ±0.02 kg (1.8 ±0.05 lb) and a minimum mass moment of inertia of 34 kg-cm2 (0.03 lb-in-sec2) in yaw and pitch about the CG of the probe. One third of the weight of suspension cables and any attachments to the impact probe must be included in the calculation of mass, and such components may not exceed five percent of the total weight of the probe. The impacting end of the probe, has a flat, continuous, and non-deformable 76.2 ±0.2 mm (3.00 ±0.01 in) diameter face with an edge radius of 7.6/12.7 mm (0.3/0.5 in). The impactor shall have a 76–77 mm (3.0–3.1 in) diameter cylindrical surface extending for a minimum of 12.5 mm (0.5 in) to the rear from the impact face. The probe's end opposite to the impact face has provisions for mounting an accelerometer with its sensitive axis collinear with the longitudinal axis of the probe. The impact probe shall have a free air resonant frequency of not less than 1000 Hz limited to the direction of the longitudinal axis of the impactor.

(c) Head accelerometers shall have dimensions, response characteristics, and sensitive mass locations specified in drawing SA572–S4 and be mounted in the head as shown in drawing 127–0000 sheet 3.

(d) *Neck force/moment transducer*. (1) The upper neck force/moment transducer shall have the dimensions, response characteristics, and sensitive axis locations specified in drawing SA572–S11 and be mounted in the head-neck assembly as shown in drawing 127–0000 sheet 3.

(2) The optional lower neck force/moment transducer shall have the dimensions, response characteristics, and sensitive axis locations specified in drawing SA572–S26 and be mounted as shown in drawing 127–0000 sheet 3.

(e) The thorax accelerometers shall have the dimensions, response characteristics, and sensitive mass locations specified in drawing SA572–S4 and be mounted in the torso assembly in triaxial configuration at T4, and as optional instrumentation in uniaxial for-and-aft oriented configuration on the most anterior ends of ribs #1 and #6 and at the spine box at the levels of #1 and #6 ribs as shown in 127–0000 sheet 3.

(f) The chest deflection transducer shall have the dimensions and response characteristics specified in drawing SA572–S50 and be mounted in the upper torso assembly as shown in 127–0000 sheet 3.

(g) The optional lumbar spine force-moment transducer shall have the dimensions, response characteristics, and sensitive axis locations specified in drawing SA572–S12 and be mounted in the lower torso assembly as shown in drawing 127–0000 sheet 3 as a replacement for lumbar adaptor 127–3005.

(h) The optional iliac spine force transducers shall have the dimensions and response characteristics specified in drawing SA572–S13 and be mounted in the torso assembly as shown in drawing 127–0000 sheet 3 as a replacement for ASIS load cell 127–3015–1 (left) and −2 (right).

(i) The optional pelvis accelerometers shall have the dimensions, response characteristics, and sensitive mass locations specified in drawing SA572–S4 and be mounted in the torso assembly in triaxial configuration in the pelvis bone as shown in drawing 127–0000 sheet 3.

(j) The femur force transducer shall have the dimensions and response characteristics specified in drawing SA72–S10 and be mounted in the leg assembly as shown in drawing 127–0000 sheet 3.

(k) The outputs of acceleration and force-sensing devices installed in the dummy and in the test apparatus specified by this part must be recorded in individual data channels that conform to SAE Recommended Practice J211, Rev. Mar95 ''Instrumentation for lmpact Tests,'' except that the lumbar measurements are based on CFC 600, with channel classes as follows:

(1) Head acceleration—Class 1000.

(2) Neck:

(i) Forces—Class 1000;

(ii) Moments—Class 600;

(iii) Pendulum acceleration—Class 180;

(iv) Rotation—Class 60 (if used).

(3) Thorax:

(i) Rib acceleration—Class 1000;

(ii) Spine and pendulum accelerations—Class 180;

(iii) Sternum deflection—Class 600.

(4) Lumbar:

(i) Forces—Class 1000;

(ii) Moments—Class 600;

(iii) Flexion—Class 60 if data channel is used.

(5) Pelvis accelerations—Class 1000.

(6) Femur forces—Class 600.

(l) Coordinate signs for instrumentation polarity shall conform to the Sign Convention For Vehicle Crash Testing, Surface Vehicle Information Report, SAE J1733, 1994–12.

(m) The mountings for sensing devices shall have no resonance frequency less than 3 times the frequency range of the applicable channel class.

(n) Limb joints must be set at one G, barely restraining the weight of the limb when it is extended horizontally. The force needed to move a limb segment shall not exceed 2G throughout the range of limb motion.

(o) Performance tests of the same component, segment, assembly, or fully assembled dummy shall be separated in time by period of not less than 30 minutes unless otherwise noted.

(p) Surfaces of dummy components may not be painted except as specified in this subpart or in drawings subtended by this subpart.

[65 FR 2065, Jan. 13, 2000, as amended at 67 FR 47328, July 18, 2002]

FIGURES TO SUBPART N OF PART 572

Figure N 1

HEAD DROP TEST SET-UP SPECIFICATIONS

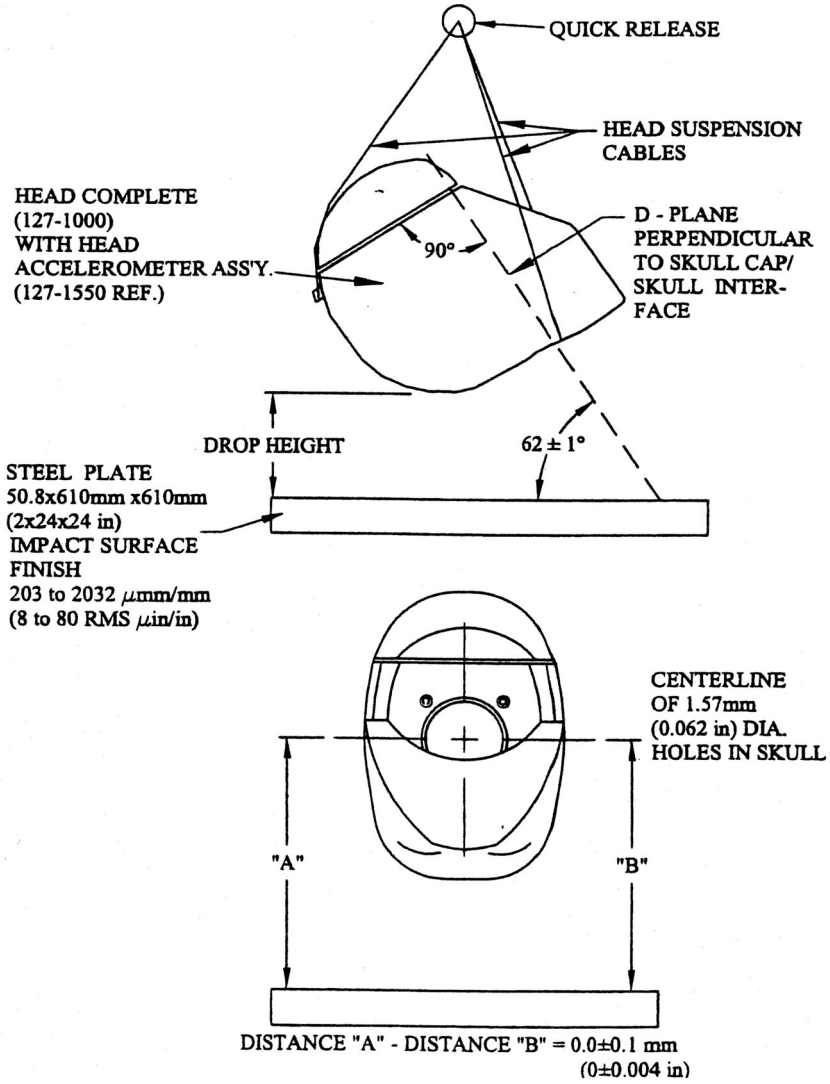

Figure N 2

NECK FLEXION TEST SET-UP SPECIFICATIONS

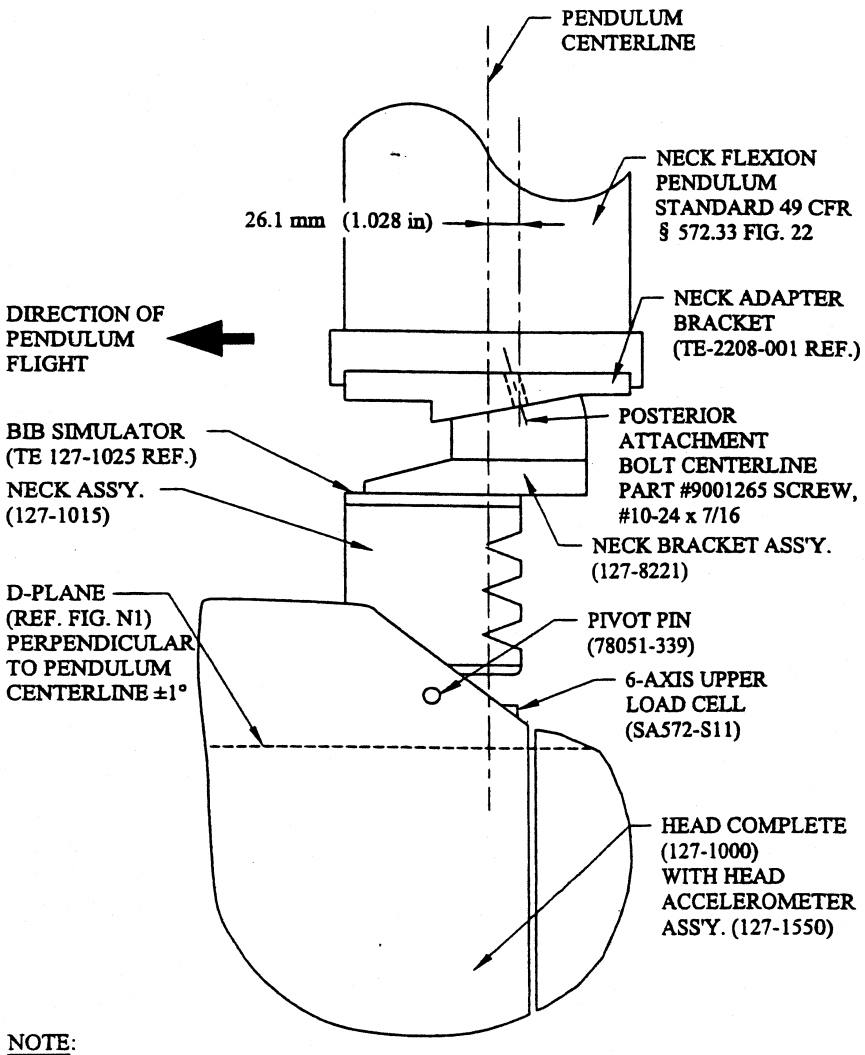

NOTE:
PENDULUM SHOWN IN VERTICAL ORIENTATION

Figure N 3

NECK EXTENSION TEST SET-UP SPECIFICATIONS

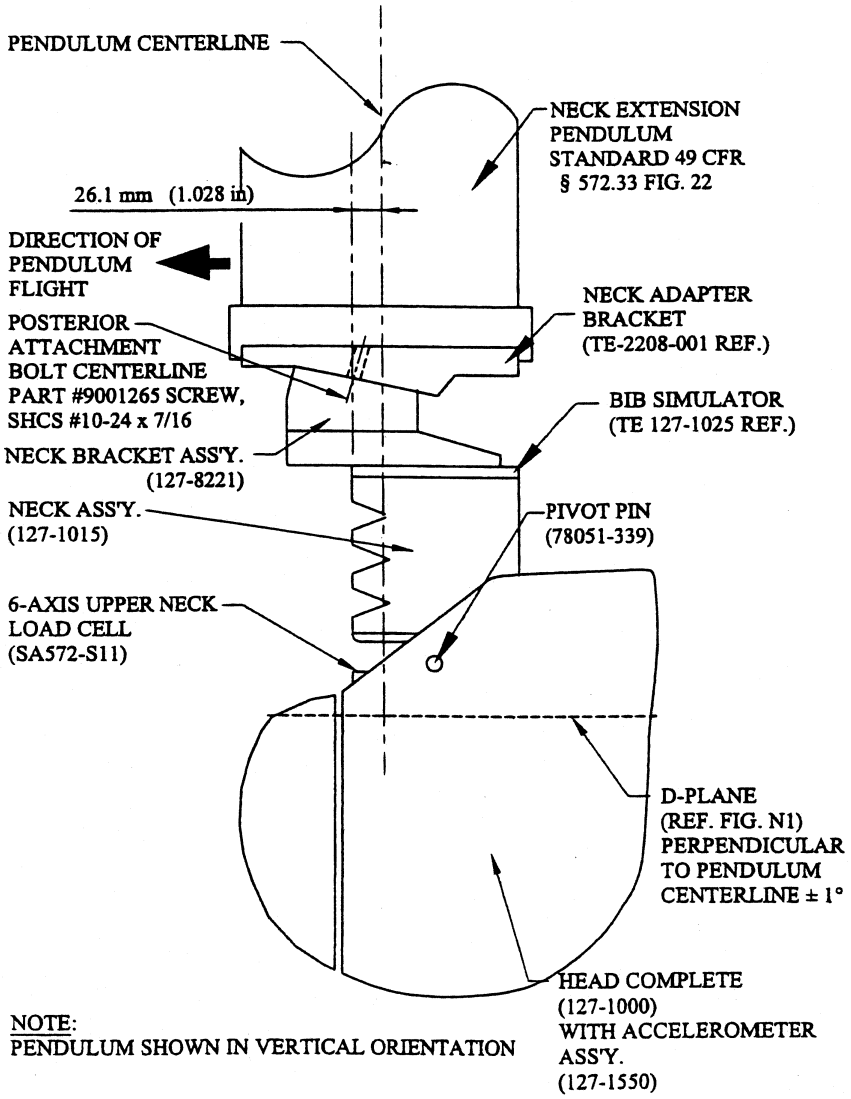

NOTE:
PENDULUM SHOWN IN VERTICAL ORIENTATION

FIGURE N 4
THORAX IMPACT TEST SET-UP SPECIFICATIONS

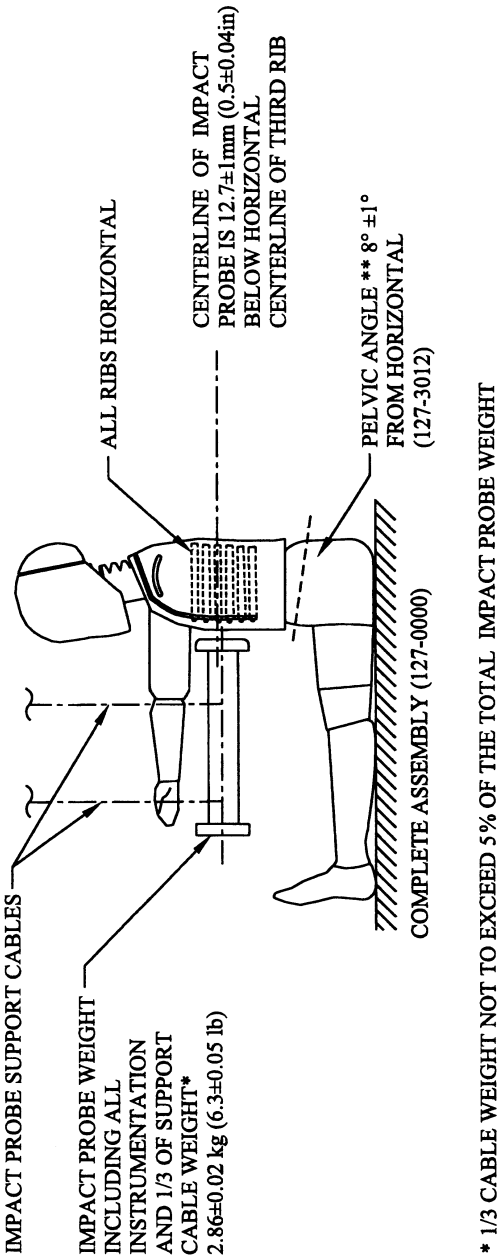

* 1/3 CABLE WEIGHT NOT TO EXCEED 5% OF THE TOTAL IMPACT PROBE WEIGHT
** PELVIS LUMBAR JOINING SURFACE

FIGURE N 5
TORSO FLEXION TEST SET-UP SPECIFICATIONS

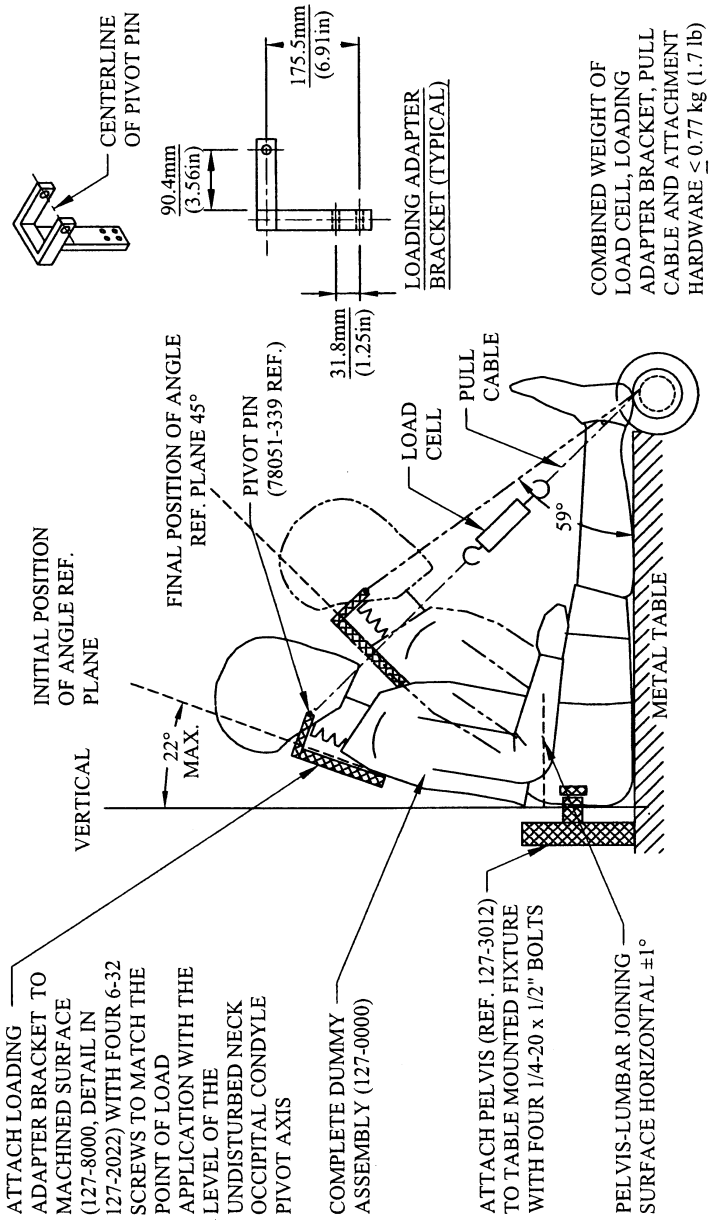

FIGURE N 6

KNEE IMPACT TEST SET-UP SPECIFICATIONS

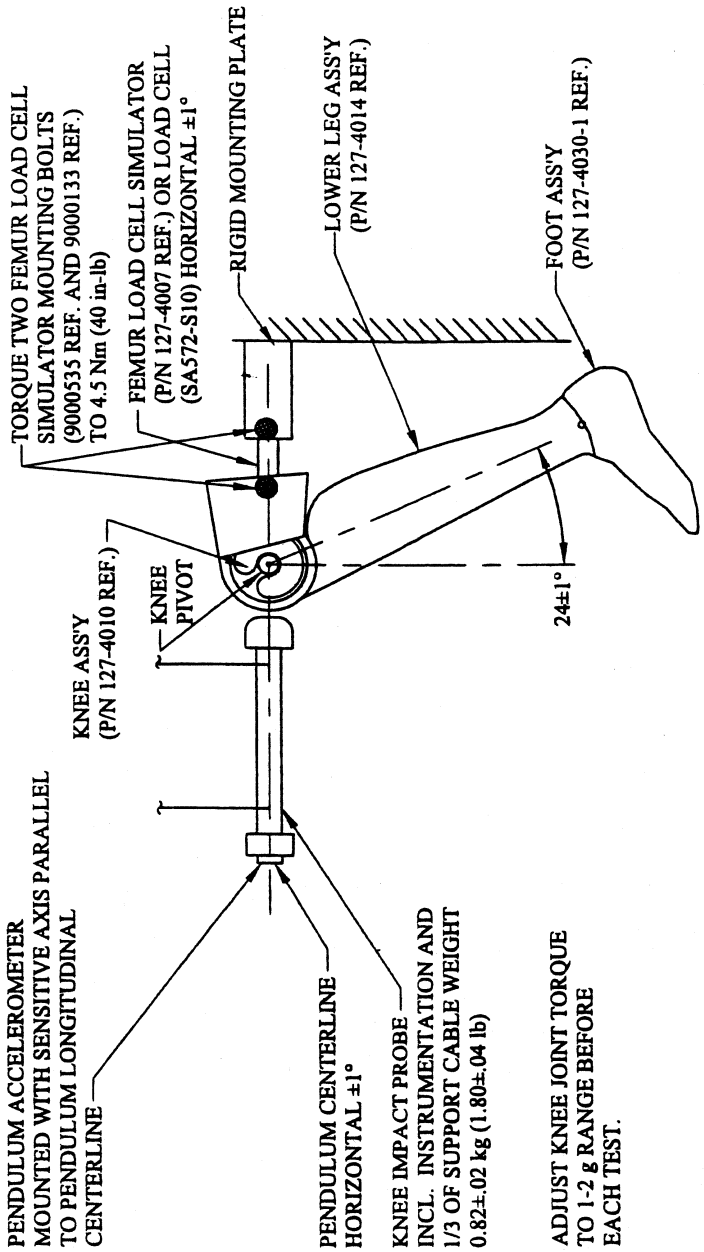

[65 FR 2065, Jan. 13, 2000, as amended at 67 FR 47329, July 18, 2002; 67 FR 59023, Sept. 19, 2002]

Subpart O—Hybrid III 5th Percentile Female Test Dummy, Alpha Version

SOURCE: 65 FR 10968, Mar. 1, 2000, unless otherwise noted.

§ 572.130 Incorporation by reference.

(a) The following materials are hereby incorporated into this Subpart by reference:

(1) A drawings and specification package entitled ''Parts List and Drawings, Part 572 Subpart O Hybrid III Fifth Percentile Small Adult Female Crash Test Dummy (HIII–5F, Alpha Version)'' (June 2002), incorporated by reference in ''572.131, and consisting of:

(i) Drawing No. 880105–100X, Head Assembly, incorporated by reference in §§ 572.131, 572.132, 572.133, 572.134, 572.135, and 572.137;

(ii) Drawing No. 880105–250, Neck Assembly, incorporated by reference in §§ 572.131, 572.133, 572.134, 572.135, and 572.137;

(iii) Drawing No. 880105–300, Upper Torso Assembly, incorporated by reference in §§ 572.131, 572.134, 572.135, and 572.137;

(iv) Drawing No. 880105–450, Lower Torso Assembly, incorporated by reference in §§ 572.131, 572.134, 572.135, and 572.137;

(v) Drawing No. 880105–560–1, Complete Leg Assembly—left, incorporated by reference in §§ 572.131, 572.135, 572.136, and 572.137;

(vi) Drawing No. 880105–560–2, Complete Leg Assembly—right incorporated by reference in §§ 572.131, 572.135, 572.136, and 572.137;

(vii) Drawing No. 880105–728–1, Complete Arm Assembly—left, incorporated by reference in §§ 572.131, 572.134, and 572.135 as part of the complete dummy assembly;

(viii) Drawing No. 880105–728–2, Complete Arm Assembly—right, incorporated by reference in §§ 572.131, 572.134, and 572.135 as part of the complete dummy assembly;

(ix) The Hybrid III 5th percentile small adult female crash test dummy parts list, incorporated by reference in § 572.131;

(2) A procedures manual entitled ''Procedures for Assembly, Disassembly, and Inspection (PADI) Subpart O Hybrid III Fifth Percentile Adult Female Crash Test Dummy (HIII–5F), Alpha Version'' (February 2002), incorporated by reference in § 572.132.

(3) SAE Recommended Practice J211/1, Rev. Mar 95 ''Instrumentation for Impact Tests—Part 1—Electronic Instrumentation'', incorporated by reference in § 572.137;

(4) SAE Recommended Practice J211/2, Rev. Mar 95 ''Instrumentation for Impact Tests—Part 2—Photographic Instrumentation'' incorporated by reference in § 572.137; and

(5) SAE J1733 of 1994–12 ''Sign Convention for Vehicle Crash Testing'', incorporated by reference in § 572.137.

(b) The Director of the Federal Register approved the materials incorporated by reference in accordance with 5 U.S.C. 552(a) and 1 CFR part 51. Copies of the materials may be inspected at NHTSA's Technical Reference Library, 400 Seventh Street SW., room 5109, Washington, DC, or at the National Archives and Records Administration (NARA). For information on the availability of this material at NARA, call 202–741–6030, or go to: *http://www.archives.gov/federal_register/code_of_federal_regulations/ibr_locations.html.*

(c) The incorporated materials are available as follows:

(1) The Parts List and Drawings, Part 572 Subpart O Hybrid III Fifth Percentile Small Adult Female Crash Test Dummy, (HIII–5F, Alpha Version) (June 2002), referred to in paragraph (a)(1) of this section and the Procedures for Assembly, Disassembly, and Inspection (PADI) of the Hybrid III 5th Percentile Small Adult Female Crash Test Dummy, Alpha Version, referred to in paragraph (a)(2) of this section are available from Reprographic Technologies, 9107 Gaither Road, Gaithersburg, MD 20877, (301) 419–5070. These documents are also accessible for reading and copying through the DOT Docket Management System.

(2) The SAE materials referred to in paragraphs (a)(3) and (a)(4) of this section are available from the Society of

Automotive Engineers, Inc., 400 Commonwealth Drive, Warrendale, Pa. 15096.

[65 FR 10968, Mar. 1, 2000, as amended at 67 FR 46413, July 15, 2002]

§ 572.131 General description.

(a) The Hybrid III fifth percentile adult female crash test dummy is defined by drawings and specifications containing the following materials:

(1) Technical drawings and specifications package P/N 880105–000 (refer to § 572.130(a)(1)), the titles of which are listed in Table A;

(2) Parts List and Drawings, Part 572 Subpart O Hybrid III Fifth Percentile Small Adult Female Crash Test Dummy (HIII–5F, Alpha Version) (June 2002) (refer to § 572.130(a)(1)(ix)).

TABLE A

Component assembly	Drawing No.
Head Assembly	880105–100X
Neck Assembly	880105–250
Upper Torso Assembly	880105–300
Lower Torso Assembly	880105–450
Complete Leg Assembly—left	880105–560–1
Complete Leg Assembly—right	880105–560–2
Complete Arm Assembly—left	880105–728–1
Complete Arm Assembly—right	880105–728–2

(b) Adjacent segments are joined in a manner such that, except for contacts existing under static conditions, there is no contact between metallic elements throughout the range of motion or under simulated crash impact conditions.

(c) The structural properties of the dummy are such that the dummy conforms to this Subpart in every respect before use in any test similar to those specified in Standard 208, Occupant Crash Protection.

[65 FR 10968, Mar. 1, 2000, as amended at 67 FR 46414, July 15, 2002]

§ 572.132 Head assembly and test procedure.

(a) The head assembly (refer to § 572.130(a)(1)(i)) for this test consists of the complete head (drawing 880105–100X), a six-axis neck transducer (drawing SA572–S11) or its structural replacement (drawing 78051–383X), and 3 accelerometers (drawing SA572–S4).

(b) When the head assembly is dropped from a height of 376.0 ±1.0 mm (14.8 ±0.04 in) in accordance with subsection (c) of this section, the peak resultant acceleration at the location of the accelerometers at the head CG may not be less than 250 G or more than 300 G. The resultant acceleration vs. time history curve shall be unimodal; oscillations occurring after the main pulse must be less than 10 percent of the peak resultant acceleration. The lateral acceleration shall not exceed 15 G (zero to peak).

(c) *Head test procedure*. The test procedure for the head is as follows:

(1) Soak the head assembly in a controlled environment at any temperature between 18.9 and 25.6 °C (66 and 78 °F) and a relative humidity from 10 to 70 percent for at least four hours prior to a test.

(2) Prior to the test, clean the impact surface of the skin and the impact plate surface with isopropyl alcohol, trichloroethane, or an equivalent. The skin of the head must be clean and dry for testing.

(3) Suspend and orient the head assembly as shown in Figure 19 of 49 CFR 572. The lowest point on the forehead must be 376.0 ±1.0 mm (14.8 ±0.04 in) from the impact surface. The 1.57 mm (0.062 in) diameter holes located on either side of the dummy's head shall be used to ensure that the head is level with respect to the impact surface.

(4) Drop the head assembly from the specified height by means that ensure a smooth, instant release onto a rigidly supported flat horizontal steel plate which is 50.8 mm (2.0 in) thick and 610 mm (24.0 in) square. The impact surface shall be clean, dry and have a micro finish of not less than $203.2.\times10^{-6}$ mm (8 micro inches) (RMS) and not more than 2032.0×10^{-6} mm (80 micro inches) (RMS).

(5) Allow at least 2 hours between successive tests on the same head.

§ 572.133 Neck assembly and test procedure.

(a) The neck assembly (refer to § 572.130(a)(1)(ii)) for the purposes of this test consists of the assembly of components shown in drawing 880105–250.

(b) When the head-neck assembly consisting of the head (drawing 880105–100X), neck (drawing 880105–250), bib

simulator (drawing 880105–371), upper neck adjusting bracket (drawing 880105–207), lower neck adjusting bracket (drawing 880105–208), six-axis neck transducer (drawing SA572–S11), and either three accelerometers (drawing SA572–S4) or their mass equivalent installed in the head assembly as specified in drawing 880105–100X, is tested according to the test procedure in subsection (c) of this section, it shall have the following characteristics:

(1) *Flexion*. (i) Plane D, referenced in Figure O1, shall rotate in the direction of preimpact flight with respect to the pendulum's longitudinal centerline between 77 degrees and 91 degrees. During the time interval while the rotation is within the specified corridor, the peak moment, measured by the neck transducer (drawing SA5572–311), about the occipital condyles may not be less than 69 N-m (51 ft-lbf) and not more than 83 N-m (61 ft-lbf). The positive moment shall decay for the first time to 10 N-m (7.4 ft-lbf) between 80 ms and 100 ms after time zero.

(ii) The moment shall be calculated by the following formula: Moment (N-m)= $M_y - (0.01778m) \times (F_x)$.

(iii) M_y is the moment about the y-axis, F_x is the shear force measured by the neck transducer (drawing SA572–S11), and 0.01778m is the distance from force to occipital condyle.

(2) *Extension*. (i) Plane D, referenced in Figure O2, shall rotate in the direction of preimpact flight with respect to the pendulum's longitudinal centerline between 99 degrees and 114 degrees. During the time interval while the rotation is within the specified corridor, the peak moment, measured by the neck transducer (drawing SA5572–S11), about the occipital condyles shall be not more than −53 N-m (−39 ft-lbf) and not less than −65 N-m (−48 ft-lbf). The negative moment shall decay for the first time to −10 N-m (−7.4 ft-lbf) between 94 ms and 114 ms after time zero.

(ii) The moment shall be calculated by the following formula: Moment (N-m) = $M_y - (0.01778m) \times (F_x)$.

(iii) M_y is the moment about the y-axis, F_x is the shear force measured by the neck transducer (drawing SA572–S11), and 0.01778 m is the distance from force to occipital condyle.

(3) Time-zero is defined as the time of initial contact between the pendulum striker plate and the honeycomb material. All data channels shall be at the zero level at this time.

(c) *Test Procedure*. The test procedure for the neck assembly is as follows:

(1) Soak the neck assembly in a controlled environment at any temperature between 20.6 and 22.2 °C (69 and 72 °F) and a relative humidity between 10 and 70 percent for at least four hours prior to a test.

(2) Torque the jam nut (drawing 9000018) on the neck cable (drawing 880105–206) to 1.4 ±0.2 N-m (12.0 ±2.0 in-lb).

(3) Mount the head-neck assembly, defined in subsection (b) of this section, on the pendulum described in Figure 22 of 49 CFR 572 so that the midsagittal plane of the head is vertical and coincides with the plane of motion of the pendulum as shown in Figure O1 for flexion tests and Figure O2 for extension tests.

(4)(i) Release the pendulum and allow it to fall freely from a height to achieve an impact velocity of 7.01 ±0.12 m/s (23.0 ±0.4 ft/s) for flexion tests and 6.07 ±0.12 m/s (19.9 ±0.40 ft/s) for extension tests, measured by an accelerometer mounted on the pendulum as shown in Figure 22 of 49 CFR 572 at the instant of contact with the honey comb.

(ii) Stop the pendulum from the initial velocity with an acceleration vs. time pulse which meets the velocity change as specified below. Integrate the pendulum acceleration data channel to obtain the velocity vs. time curve:

TABLE B—PENDULUM PULSE

Time ms	Flexion		Extension	
	m/s	ft/s	m/s	ft/s
10	2.1–2.5	6.9–8.2	1.5–1.9	4.9–6.2
20	4.0–5.0	13.1–16.4	3.1–3.9	10.2–12.8
30	5.8–7.0	19.5–23.0	4.6–5.6	15.1–18.4

[65 FR 10968, Mar. 1, 2000, as amended at 67 FR 46414, July 15, 2002]

§ 572.134 Thorax assembly and test procedure.

(a) Thorax (Upper Torso) Assembly (refer to § 572.130(a)(1)(iii)). The thorax consists of the part of the torso assembly shown in drawing 880105–300.

(b) When the anterior surface of the thorax of a completely assembled dummy (drawing 880105–000) is impacted by a test probe conforming to section 572.137(a) at 6.71 ±0.12 m/s (22.0 ±0.4 ft/s) according to the test procedure in subsection (c) of this section:

(1) Maximum sternum displacement (compression) relative to the spine, measured with chest deflection transducer (drawing SA572–S5), must be not less than 50.0 mm (1.97 in) and not more than 58.0 mm (2.30 in). Within this specified compression corridor, the peak force, measured by the impact probe as defined in section 572.137 and calculated in accordance with paragraph (b)(3) of this section, shall not be less than 3900 N (876 lbf) and not more than 4400 N (989 lbf). The peak force after 18.0 mm (0.71 in) of sternum displacement but before reaching the minimum required 50.0 mm (1.97 in) sternum displacement limit shall not exceed 4600 N.

(2) The internal hysteresis of the ribcage in each impact as determined by the plot of force vs. deflection in paragraph (1) of this section shall be not less than 69 percent but not more than 85 percent. The hysteresis shall be calculated by determining the ratio of the area between the loading and unloading portions of the force deflection curve to the area under the loading portion of the curve.

(3) The force shall be calculated by the product of the impactor mass and its deceleration.

(c) *Test procedure*. The test procedure for the thorax assembly is as follows:

(1) The dummy is clothed in a form fitting cotton stretch above-the-elbow sleeved shirt and above-the-knee pants. The weight of the shirt and pants shall not exceed 0.14 kg (0.30 lb) each.

(2) Soak the dummy in a controlled environment at any temperature between 20.6 and 22.2 °C (69 and 72 °F) and a relative humidity between 10 and 70 percent for at least four hours prior to a test.

(3) Seat and orient the dummy on a seating surface without back support as shown in Figure O3, with the limbs extended horizontally and forward, parallel to the midsagittal plane, the midsagittal plane vertical within ±1 degree and the ribs level in the anterior-posterior and lateral directions within ±0.5 degrees.

(4) Establish the impact point at the chest midsagittal plane so that the impact point of the longitudinal centerline of the probe coincides with the midsagittal plane of the dummy within ±2.5 mm (0.1 in) and is 12.7 ±1.1 mm (0.5 ±0.04 in) below the horizontal-peripheral centerline of the No. 3 rib and is within 0.5 degrees of a horizontal line in the dummy's midsagittal plane.

(5) Impact the thorax with the test probe so that at the moment of contact the probe's longitudinal center line falls within 2 degrees of a horizontal line in the dummy's midsagittal plane.

(6) Guide the test probe during impact so that there is no significant lateral, vertical or rotational movement.

(7) No suspension hardware, suspension cables, or any other attachments to the probe, including the velocity vane, shall make contact with the dummy during the test.

[65 FR 10968, Mar. 1, 2000, as amended at 67 FR 46415, July 15, 2002]

§ 572.135 Upper and lower torso assemblies and torso flexion test procedure.

(a) *Upper/lower torso assembly*. The test objective is to determine the stiffness effects of the lumbar spine (drawing 880105–1096), and abdominal insert (drawing 880105–434), on resistance to articulation between the upper torso assembly (drawing 880105–300) and the lower torso assembly (drawing 880105–450) (refer to § 572.130(a)(1)(iv)).

(b)(1) When the upper torso assembly of a seated dummy is subjected to a force continuously applied at the head to neck pivot pin level through a rigidly attached adaptor bracket as shown in Figure O4 according to the test procedure set out in subsection (c) of this section, the lumbar spine-abdomen assembly shall flex by an amount that permits the upper torso assembly to

translate in angular motion relative to the vertical transverse plane 45 ±0.5 degrees at which time the force applied must be not less than 320 N (71.5 lbf) and not more than 390 N (87.4 lbf), and

(2) Upon removal of the force, the torso assembly must return to within 8 degrees of its initial position.

(c) *Test procedure.* The test procedure for the upper/lower torso assembly is as follows:

(1) Soak the dummy in a controlled environment at any temperature between 18.9 and 25.6 °C (66 and 78 °F) and a relative humidity between 10 and 70 percent for at least four hours prior to a test.

(2) Assemble the complete dummy (with or without the legs below the femurs) and attach to the fixture in a seated posture as shown in Figure O4.

(3) Secure the pelvis to the fixture at the pelvis instrument cavity rear face by threading four ¼ inch cap screws into the available threaded attachment holes. Tighten the mountings so that the test material is rigidly affixed to the test fixture and the pelvic-lumbar joining surface is horizontal.

(4) Attach the loading adapter bracket to the spine of the dummy as shown in Figure O4.

(5) Inspect and adjust, if necessary, the seating of the abdominal insert within the pelvis cavity and with respect to the torso flesh, assuring that the torso flesh provides uniform fit and overlap with respect to the outside surface of the pelvis flesh.

(6) Flex the dummy's upper torso three times between the vertical and until the torso reference plane, as shown in Figure O4, reaches 30 degrees from the vertical transverse plane. Bring the torso to vertical orientation and wait for 30 minutes before conducting the test. During the 30 minute waiting period, the dummy's upper torso shall be externally supported at or near its vertical orientation to prevent it from drooping.

(7) Remove all external support and wait two minutes. Measure the initial orientation angle of the torso reference plane of the seated, unsupported dummy as shown in Figure O4. The initial orientation angle may not exceed 20 degrees.

(8) Attach the pull cable and the load cell as shown in Figure O4.

(9) Apply a tension force in the midsagittal plane to the pull cable as shown in Figure O4 at any upper torso deflection rate between 0.5 and 1.5 degrees per second, until the angle reference plane is at 45 ±0.5 degrees of flexion relative to the vertical transverse plane.

(9) Continue to apply a force sufficient to maintain 45 ±0.5 degrees of flexion for 10 seconds, and record the highest applied force during the 10-second period.

(10) Release all force at the attachment bracket as rapidly as possible, and measure the return angle with respect to the initial angle reference plane as defined in paragraph (6) 3 minutes after the release.

§ 572.136 Knees and knee impact test procedure.

(a) *Knee assembly.* The knee assembly (refer to §§ 572.130(a)(1)(v) and (vi)) for the purpose of this test is the part of the leg assembly shown in drawing 880105–560.

(b)(1) When the knee assembly, consisting of sliding knee assembly (drawing 880105–528R or –528L), lower leg structural replacement (drawing 880105–603), lower leg flesh (drawing 880105–601), ankle assembly (drawing 880105–660), foot assembly (drawing 880105–651 or 650), and femur load transducer (drawing SA572–S14) or its structural replacement (drawing 78051–319) is tested according to the test procedure in subsection (c), the peak resistance force as measured with the test probe-mounted accelerometer must be not less than 3450 N (776 lbf) and not more than 4060 N (913 lbf).

(2) The force shall be calculated by the product of the impactor mass and its deceleration.

(c) *Test procedure.* The test procedure for the knee assembly is as follows:

(1) Soak the knee assembly in a controlled environment at any temperature between 18.9 and 25.6 °C (66 and 78 °F) and a relative humidity from 10 to 70 percent for at least four hours prior to a test.

(2) Mount the test material and secure it to a rigid test fixture as shown

in Figure O5. No part of the foot or tibia may contact any exterior surface.

(3) Align the test probe so that throughout its stroke and at contact with the knee it is within 2 degrees of horizontal and collinear with the longitudinal centerline of the femur.

(4) Guide the pendulum so that there is no significant lateral vertical or rotational movement at the time of initial contact between the impactor and the knee.

(5) The test probe velocity at the time of contact shall be 2.1 ±0.03 m/s (6.9 ±0.1 ft/s).

(6) No suspension hardware, suspension cables, or any other attachments to the probe, including the velocity vane, shall make contact with the dummy during the test.

[65 FR 10968, Mar. 1, 2000, as amended at 67 FR 46415, July 15, 2002]

§ 572.137 Test conditions and instrumentation.

(a) The test probe for thoracic impacts, except for attachments, shall be of rigid metallic construction and concentric about its longitudinal axis. Any attachments to the impactor, such as suspension hardware, impact vanes, etc., must meet the requirements of § 572.134(c)(7). The impactor shall have a mass of 13.97 ±0.23 kg (30.8 ±0.05 lbs) and a minimum mass moment of inertia of 3646 kg-cm^2 (3.22 lbs-in-sec^2) in yaw and pitch about the CG of the probe. One-third (1/3) of the weight of suspension cables and any attachments to the impact probe must be included in the calculation of mass, and such components may not exceed five percent of the total weight of the test probe. The impacting end of the probe, perpendicular to and concentric with the longitudinal axis of the probe, has a flat, continuous, and non-deformable 152.4 ±0.25 mm (6.00 ±0.01 in) diameter face with a minimum/maximum edge radius of 7.6/12.7 mm (0.3/0.5 in). The impactor shall have a 152.4–152.6 mm (6.0–6.1 in) diameter cylindrical surface extending for a minimum of 25 mm (1.0 in) to the rear from the impact face. The probe's end opposite to the impact face has provisions for mounting of an accelerometer with its sensitive axis collinear with the longitudinal axis of the probe. The impact probe has a free air resonant frequency of not less than 1000 Hz, which may be determined using the procedure listed in Docket No. NHTSA–6714–14.

(b) The test probe for knee impacts, except for attachments, shall be of rigid metallic construction and concentric about its longitudinal axis. Any attachments to the impactor, such as suspension hardware, impact vanes, etc., must meet the requirements of § 572.136(c)(6). The impactor shall have a mass of 2.99 0.23 kg (6.6 ±0.05 lbs) and a minimum mass moment of inertia of 209 kg-cm^2 (0.177 lb-in-sec^2) in yaw and pitch about the CG of the probe. One-third (1/3) of the weight of suspension cables and any attachments to the impact probe may be included in the calculation of mass, and such components may not exceed five percent of the total weight of the test probe. The impacting end of the probe, perpendicular to and concentric with the longitudinal axis of the probe, has a flat, continuous, and non-deformable 76.2 ±0.2 mm (3.00 ±0.01 in) diameter face with a minimum/maximum edge radius of 7.6/12.7 mm (0.3/0.5 in). The impactor shall have a 76.2–76.4 mm (3.0–3.1 in) diameter cylindrical surface extending for a minimum of 12.5 mm (0.5 in) to the rear from the impact face. The probe's end opposite to the impact face has provisions for mounting an accelerometer with its sensitive axis collinear with the longitudinal axis of the probe. The impact probe has a free air resonant frequency of not less than 1000 Hz, which may be determined using the procedure listed in Docket No. NHTSA–6714–14.

(c) Head accelerometers shall have dimensions, response characteristics, and sensitive mass locations specified in drawing SA572–S4 and be mounted in the head as shown in drawing 880105–000 sheet 3 of 6.

(d) The upper neck force/moment transducer shall have the dimensions, response characteristics, and sensitive axis locations specified in drawing SA572–S11 and be mounted in the head neck assembly as shown in drawing 880105–000, sheet 3 of 6.

(e) The thorax accelerometers shall have the dimensions, response characteristics, and sensitive mass locations specified in drawing SA572–S4 and be

mounted in the torso assembly in triaxial configuration within the spine box instrumentation cavity and as optional instrumentation in uniaxial for-and-aft oriented configuration arranged as corresponding pairs in three locations on the sternum on and at the spine box of the upper torso assembly as shown in drawing 880105–000 sheet 3 of 6.

(f) The optional lumbar spine force-moment transducer shall have the dimensions, response characteristics, and sensitive axis locations specified in drawing SA572–S15 and be mounted in the lower torso assembly as shown in drawing 880105–450.

(g) The optional iliac spine force transducers shall have the dimensions and response characteristics specified in drawing SA572–S16 and be mounted in the torso assembly as shown in drawing 880105–450.

(h) The pelvis accelerometers shall have the dimensions, response characteristics, and sensitive mass locations specified in drawing SA572–S4 and be mounted in the torso assembly in triaxial configuration in the pelvis bone as shown in drawing 880105–000 sheet 3.

(i) The single axis femur force transducer (SA572–S14) or the optional multiple axis femur force/moment transducer (SA572–S29) shall have the dimensions, response characteristics, and sensitive axis locations specified in the appropriate drawing and be mounted in the femur assembly as shown in drawing 880105–500 sheet 3 of 6.

(j) The chest deflection transducer shall have the dimensions and response characteristics specified in drawing SA572–S51 and be mounted to the upper torso assembly as shown in drawings 880105–300 and 880105–000 sheet 3 of 6.

(k) The optional lower neck force/moment transducer shall have the dimensions, response characteristics, and sensitive axis locations specified in drawing SA572–S27 and be mounted to the upper torso assembly as shown in drawing 880105–000 sheet 3 of 6.

(l) The optional thoracic spine force/moment transducer shall have the dimensions, response characteristics, and sensitive axis locations specified in drawing SA572–S28 and be mounted in the upper torso assembly as shown in drawing 880105–000 sheet 3 of 6.

(m) The outputs of acceleration and force-sensing devices installed in the dummy and in the test apparatus specified by this part shall be recorded in individual data channels that conform to SAE Recommended Practice J211/10, Rev. Mar95 ''Instrumentation for Impact Impact Tests;—Part 1—Electronic Instrumentation,'' and SAE Recommended Practice J211/2, Rev Mar95 ''Instrumentation for Impact Tests—Part 2—Photographic Instrumentation'', (refer to §§ 572.130(a)(3) and (4) respectively) except as noted, with channel classes as follows:

(1) Head acceleration—Class 1000

(2) Neck:

(i) Forces—Class 1000

(ii) Moments—Class 600

(iii) Pendulum acceleration—Class 180

(iv) Rotation potentiometer—Class 60 (optional)

(3) Thorax:

(i) Rib acceleration—Class 1000

(ii) Spine and pendulum accelerations—Class 180

(iii) Sternum deflection—Class 600

(iv) Forces—Class 1000

(v) Moments—Class 600

(4) Lumbar:

(i) Forces—Class 1000

(ii) Moments—Class 600

(iii) Torso flexion pulling force—Class 60 if data channel is used

(5) Pelvis:

(i) Accelerations—Class 1000

(ii) Iliac wing forces—Class 180

(6) Femur forces and knee pendulum—Class 600

(n) Coordinate signs for instrumentation polarity shall conform to the Sign Convention For Vehicle Crash Testing, Surface Vehicle Information Report, SAE J1733, 1994–12 (refer to section 572.130(a)(4)).

(o) The mountings for sensing devices shall have no resonance frequency less than 3 times the frequency range of the applicable channel class.

(p) Limb joints must be set at one G, barely restraining the weight of the limb when it is extended horizontally. The force needed to move a limb segment shall not exceed 2G throughout the range of limb motion.

(q) Performance tests of the same component, segment, assembly, or

fully assembled dummy shall be separated in time by not less than 30 minutes unless otherwise noted.

(r) Surfaces of dummy components may not be painted except as specified in this subpart or in drawings subtended by this subpart.

[65 FR 10968, Mar. 1, 2000, as amended at 67 FR 46415, July 15, 2002]

FIGURES TO SUBPART O OF PART 572

FIGURE O1
NECK FLEXION TEST SETUP SPECIFICATIONS

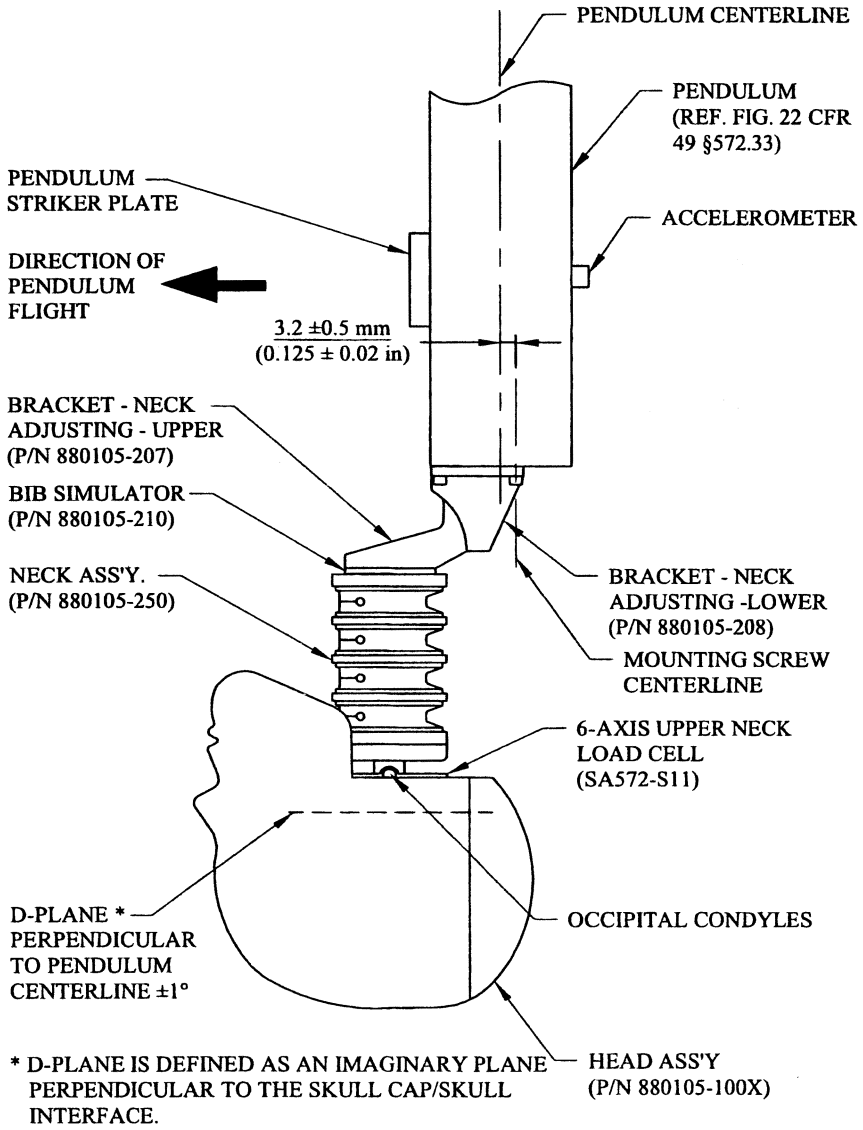

* D-PLANE IS DEFINED AS AN IMAGINARY PLANE PERPENDICULAR TO THE SKULL CAP/SKULL INTERFACE.

FIGURE O2
NECK EXTENSION TEST SETUP SPECIFICATIONS

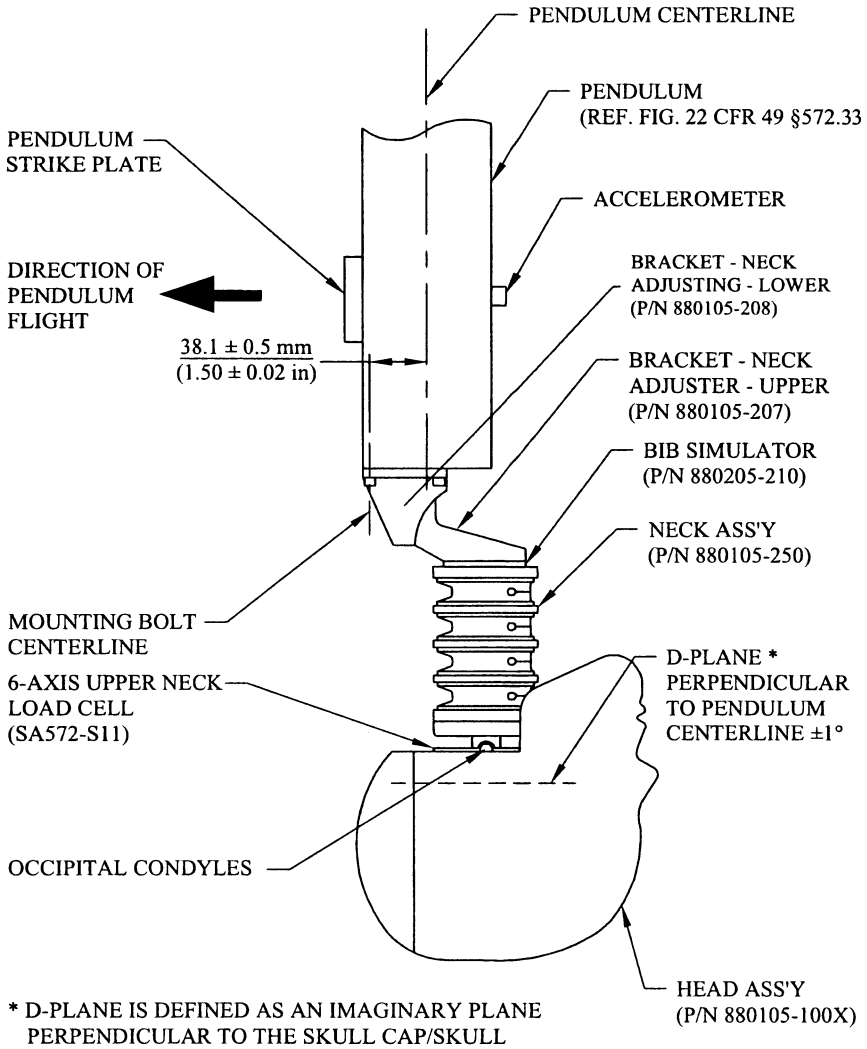

* D-PLANE IS DEFINED AS AN IMAGINARY PLANE PERPENDICULAR TO THE SKULL CAP/SKULL INTERFACE.

FIGURE 03
THORAX IMPACT TEST SETUP SPECIFICATIONS

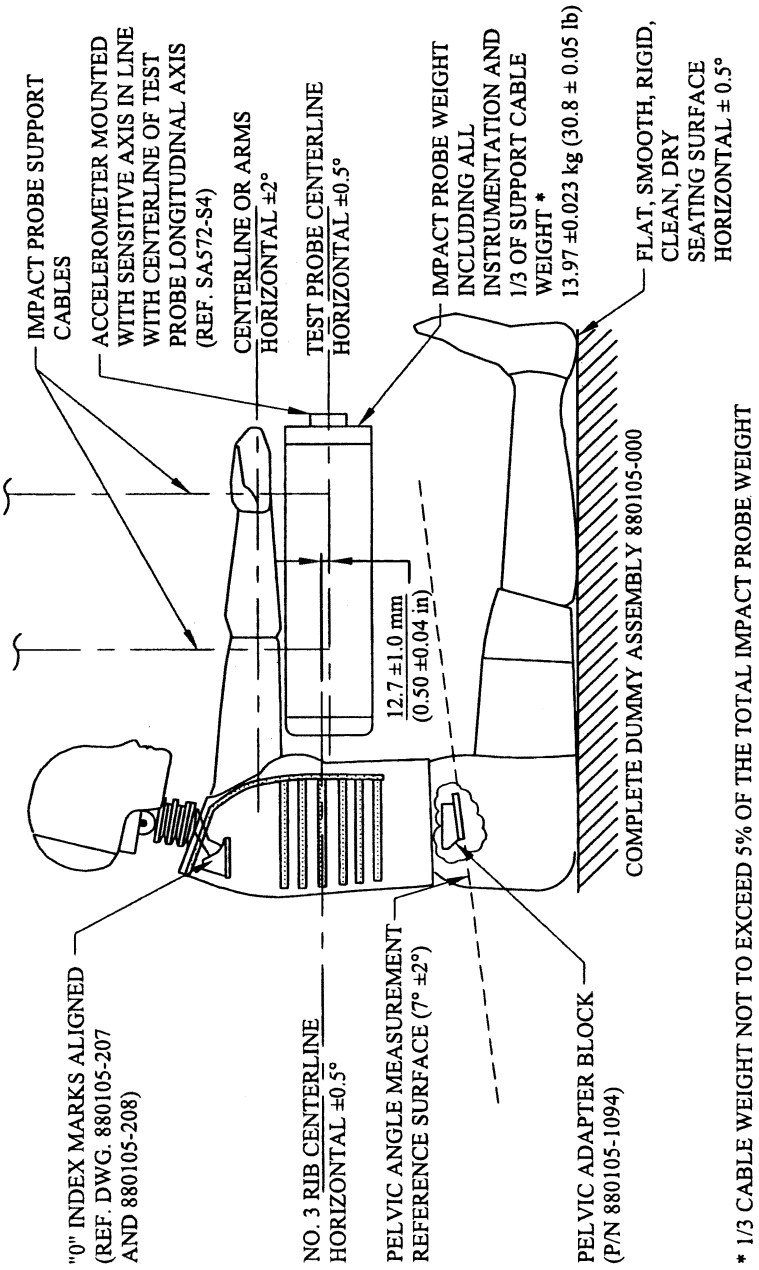

* 1/3 CABLE WEIGHT NOT TO EXCEED 5% OF THE TOTAL IMPACT PROBE WEIGHT

FIGURE O4
TORSO FLEXION TEST SET UP SPECIFICATIONS

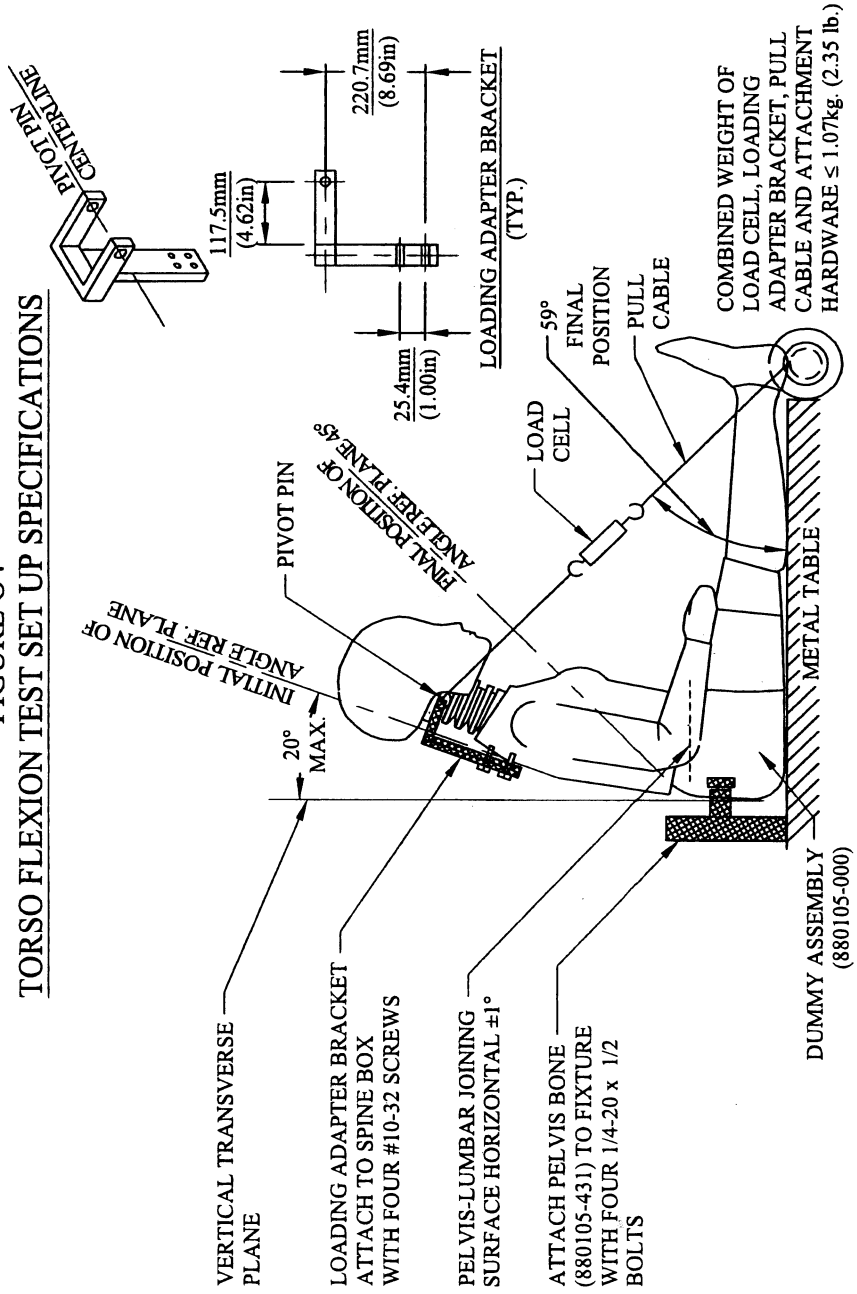

FIGURE O5
KNEE IMPACT TEST SETUP SPECIFICATIONS

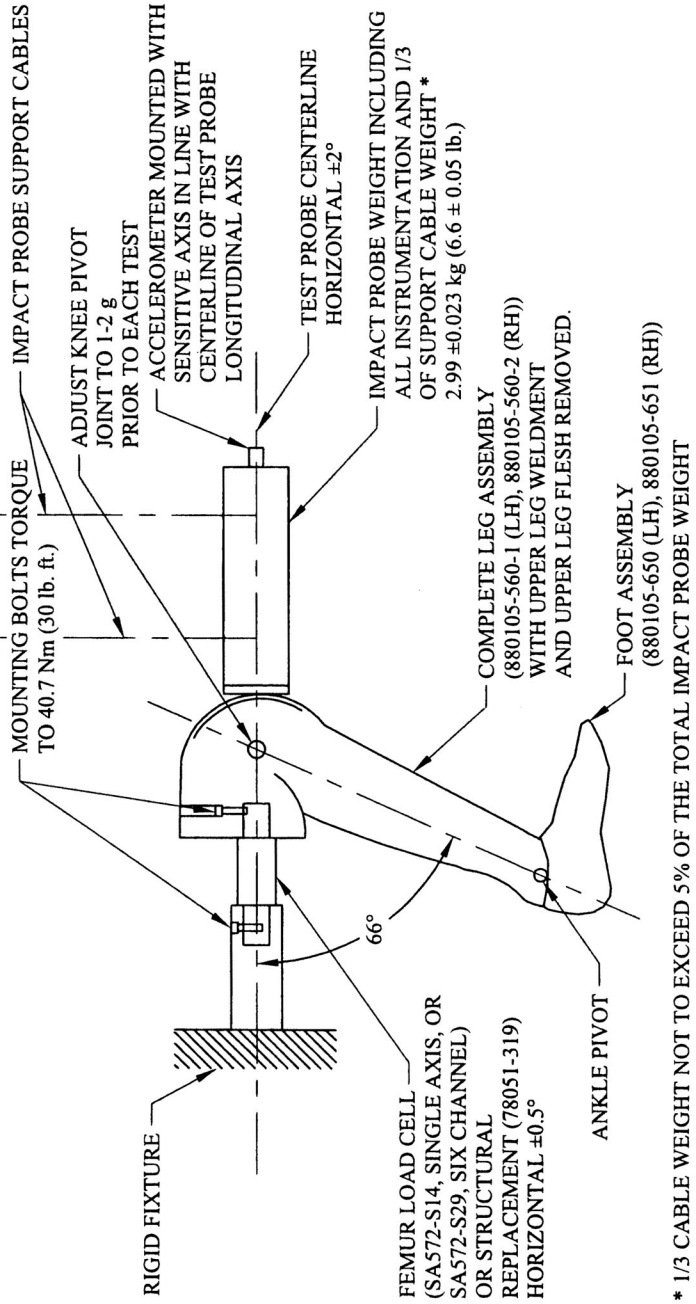

[65 FR 10968, Mar. 1, 2000, as amended at 67 FR 46415, July 15, 2002]

Subpart P—3-year-Old Child Crash Test Dummy, Alpha Version

SOURCE: 65 FR 15262, Mar. 22, 2000, unless otherwise noted.

§ 572.140 Incorporation by reference.

(a) The following materials are hereby incorporated in this subpart P by reference:

(1) A drawings and specifications package entitled, ''Parts List and Drawings, Subpart P Hybrid III 3-year-old child crash test dummy, (H-III3C, Alpha version) September 2001,'' incorporated by reference in § 572.141 and consisting of:

(i) Drawing No. 210–1000, Head Assembly, incorporated by reference in §§ 572.141, 572.142, 572.144, 572.145, and 572.146;

(ii) Drawing No. 210–2001, Neck Assembly, incorporated by reference in §§ 572.141, 572.143, 572.144, 572.145, and 572.146;

(iii) Drawing No. TE–208–000, Headform, incorporated by reference in §§ 572.141, and 572.143;

(iv) Drawing No. 210–3000, Upper/Lower Torso Assembly, incorporated by reference in §§ 572.141, 572.144, 572.145, and 572.146;

(v) Drawing No. 210–5000–1(L), –2(R), Leg Assembly, incorporated by reference in §§ 572.141, 572.144, 572.145 as part of a complete dummy assembly;

(vi) Drawing No. 210–6000–1(L), –2(R), Arm Assembly, incorporated by reference in §§ 572.141, 572.144, and 572.145 as part of the complete dummy assembly;

(2) A procedures manual entitled ''Procedures for Assembly, Disassembly and Inspection (PADI), Subpart P, Hybird III 3-year-old Child Crash Test Dummy, (H-III3C, Alpha Version) September 2001,'' incorporated by reference in § 572.141;

(3) SAE Recommended Practice J211/1, Rev. Mar 95 ''Instrumentation for Impact Tests—Part 1-Electronic Instrumentation'', incorporated by reference in § 572.146;

(4) SAE J1733 1994–12 ''Sign Convention for Vehicle Crash Testing'' incorporated by reference in § 572.146.

(5) The Director of the Federal Register approved those materials incorporated by reference in accordance with 5 U.S.C. 552(a) and 1 CFR Part 51. Copies of the materials may be inspected at NHTSA's Docket Section, 400 Seventh Street SW, room 5109, Washington, DC, or at the National Archives and Records Administration (NARA). For information on the availability of this material at NARA, call 202–741–6030, or go to: *http://www.archives.gov/federal_register/code_of_federal_regulations/ibr_locations.html.*

(b) The incorporated materials are available as follows:

(1) The drawings and specifications package referred to in paragraph (a)(1) of this section and the PADI document referred to in paragraph (a)(2) of this section are accessible for viewing and copying at the Department of Transportation's Docket public area, Plaza 401, 400 Seventh St., SW., Washington, DC 20590, and downloadable at *dms.dot.gov*. They are also available from Reprographic Technologies, 9107 Gaither Rd., Gaithersburg, MD 20877, (301) 419–5070.

(2) The SAE materials referred to in paragraphs (a)(3) and (a)(4) of this section are available from the Society of Automotive Engineers, Inc., 400 Commonwealth Drive, Warrendale, PA 15096.

[65 FR 15262, Mar. 22, 2000, as amended at 66 FR 64376, Dec. 13, 2001]

§ 572.141 General description.

(a) The Hybrid III 3-year-old child dummy is described by the following materials:

(1) Technical drawings and specifications package 210–0000 (refer to § 572.140(a)(1)), the titles of which are listed in Table A of this section;

(2) Procedures for Assembly, Disassembly and Inspection document (PADI) (refer to § 572.140(a)(2)).

(b) The dummy is made up of the component assemblies set out in the following Table A of this section:

TABLE A

Component assembly	Drawing No.
Head Assembly	210–1000
Neck Assembly (complete)	210–2001
Upper/Lower Torso Assembly	210–3000
Leg Assembly	210–5000–1(L), –2(R)

TABLE A—Continued

Component assembly	Drawing No.
Arm Assembly	210–6000–1(L), –2(R)

(c) Adjacent segments are joined in a manner such that except for contacts existing under static conditions, there is no contact between metallic elements throughout the range of motion or under simulated crash impact conditions.

(d) The structural properties of the dummy are such that the dummy conforms to this part in every respect only before use in any test similar to those specified in Standard 208, *Occupant Crash Protection,* and Standard 213, *Child Restraint Systems.*

§ 572.142 Head assembly and test procedure.

(a) The head assembly (refer to § 572.140(a)(1)(i)) for this test consists of the head (drawing 210–1000), adapter plate (drawing ATD 6259), accelerometer mounting block (drawing SA 572–S80), structural replacement of ½ mass of the neck load transducer (drawing TE–107–001), head mounting washer (drawing ATD 6262), one ½–20×1″ flat head cap screw (FHCS) (drawing 9000150), and 3 accelerometers (drawing SA–572–S4).

(b) When the head assembly in paragraph (a) of this section is dropped from a height of 376.0±1.0 mm (14.8±0.04 in) in accordance with paragraph (c) of this section, the peak resultant acceleration at the location of the accelerometers at the head CG shall not be less than 250 g or more than 280 g. The resultant acceleration versus time history curve shall be unimodal, and the oscillations occurring after the main pulse shall be less than 10 percent of the peak resultant acceleration. The lateral acceleration shall not exceed ±15 G (zero to peak).

(c) *Head test procedure.* The test procedure for the head is as follows:

(1) Soak the head assembly in a controlled environment at any temperature between 18.9 and 25.6 °C (66 and 78 °F) and at any relative humidity between 10 and 70 percent for at least four hours prior to a test.

(2) Prior to the test, clean the impact surface of the head skin and the steel impact plate surface with isopropyl alcohol, trichlorethane, or an equivalent. Both impact surfaces must be clean and dry for testing.

(3) Suspend the head assembly with its midsagittal plane in vertical orientation as shown in Figure P1 of this subpart. The lowest point on the forehead is 376.0 ±1.0 mm (14.76 ±0.04 in) from the steel impact surface. The 3.3 mm (0.13 in) diameter holes, located on either side of the dummy's head in transverse alignment with the CG, shall be used to ensure that the head transverse plane is level with respect to the impact surface.

(4) Drop the head assembly from the specified height by a means that ensures a smooth, instant release onto a rigidly supported flat horizontal steel plate which is 50.8 mm (2 in) thick and 610 mm (24 in) square. The impact surface shall be clean, dry and have a finish of not less than 203.2×10^{-6} mm (8 micro inches) (RMS) and not more than 2032.0×10^{-6} mm (80 micro inches) (RMS).

(5) Allow at least 2 hours between successive tests on the same head.

§ 572.143 Neck-headform assembly and test procedure.

(a) The neck and headform assembly (refer to §§ 572.140(a)(1)(ii) and 572.140(a)(1)(iii)) for the purposes of this test, as shown in Figures P2 and P3 of this subpart, consists of the neck molded assembly (drawing 210–2015), neck cable (drawing 210–2040), nylon shoulder bushing (drawing 9001373), upper mount plate insert (drawing 910420–048), bib simulator (drawing TE–208–050), urethane washer (drawing 210–2050), neck mounting plate (drawing TE–250–021), two jam nuts (drawing 9001336), load-moment transducer (drawing SA 572–S19), and headform (drawing TE–208–000).

(b) When the neck and headform assembly, as defined in § 572.143(a), is tested according to the test procedure in paragraph (c) of this section, it shall have the following characteristics:

(1) Flexion.

(i) Plane D, referenced in Figure P2 of this subpart, shall rotate in the direction of preimpact flight with respect to the pendulum's longitudinal centerline between 70 degrees and 82 degrees. Within this specified rotation corridor, the peak moment about the occipital condyle may not be less than 42 N-m and not more than 53 N-m.

(ii) The positive moment shall decay for the first time to 10 N-m between 60 ms and 80 ms after time zero.

(iii) The moment and rotation data channels are defined to be zero when the longitudinal centerline of the neck and pendulum are parallel.

(2) Extension.

(i) Plane D referenced in Figure P3 of this subpart shall rotate in the direction of preimpact flight with respect to the pendulum's longitudinal centerline between 83 degrees and 93 degrees. Within this specified rotation corridor, the peak moment about the occipital condyle may be not more than −43.7 N-m and not less than −53.3 N-m.

(ii) The negative moment shall decay for the first time to −10 N-m between 60 and 80 ms after time zero.

(iii) The moment and rotation data channels are defined to be zero when the longitudinal centerline of the neck and pendulum are parallel.

(c) *Test procedure.* (1) Soak the neck assembly in a controlled environment at any temperature between 20.6 and 22.2 °C (69 and 72 F) and a relative humidity between 10 and 70 percent for at least four hours prior to a test.

(2) Torque the jam nut (drawing 9001336) on the neck cable (drawing 210–2040) between 0.2 N-m and 0.3 N-m.

(3) Mount the neck-headform assembly, defined in paragraph (a) of this section, on the pendulum so the midsagittal plane of the headform is vertical and coincides with the plane of motion of the pendulum as shown in Figure P2 of this subpart for flexion and Figure P3 of this subpart for extension tests.

(4) Release the pendulum and allow it to fall freely to achieve an impact velocity of 5.50 ±0.10 m/s (18.05 + 0.40 ft/s) for flexion and 3.65 ±0.1 m/s (11.98 ±0.40 ft/s) for extension tests, measured by an accelerometer mounted on the pendulum as shown in Figure 22 of this part 572 at time zero.

(i) The test shall be conducted without inducing any torsion twisting of the neck.

(ii) Stop the pendulum from the initial velocity with an acceleration vs. time pulse which meets the velocity change as specified in Table B of this section. Integrate the pendulum acceleration data channel to obtain the velocity vs. time curve as indicated in Table B of this section.

(iii) Time-zero is defined as the time of initial contact between the pendulum striker plate and the honeycomb material. The pendulum data channel shall be zero at this time.

TABLE B—PENDULUM PULSE

Time	Flexion		Time	Extension	
ms	m/s	ft/s	ms	m/s	ft/s
10	2.0–2.7	6.6–8.9	6	1.0–1.4	3.3–4.6
15	3.0–4.0	9.8–13.1	10	1.9–2.5	6.2–8.2
20	4.0–5.1	13.1–16.7	14	2.8–3.5	9.2–11.5

§572.144 Thorax assembly and test procedure.

(a) *Thorax (upper torso) assembly (refer to §572.140(a)(1)(iv)).* The thorax consists of the upper part of the torso assembly shown in drawing 210–3000.

(b) When the anterior surface of the thorax of a completely assembled dummy (drawing 210–0000) is impacted by a test probe conforming to §572.146(a) at 6.0 ±0.1 m/s (19.7 ±0.3 ft/s) according to the test procedure in paragraph (c) of this section.

(1) Maximum sternum displacement (compression) relative to the spine, measured with the chest deflection transducer (SA–572–S50), must not be less than 32mm (1.3 in) and not more than 38mm (1.5 in). Within this specified compression corridor, the peak force, measured by the probe-mounted

accelerometer as defined in § 572.146(a) and calculated in accordance with paragraph (b)(3) of this section, shall be not less than 680 N and not more than 810 N. The peak force after 12.5 mm of sternum compression but before reaching the minimum required 32.0 mm sternum compression shall not exceed 910 N.

(2) The internal hysteresis of the ribcage in each impact, as determined from the force vs. deflection curve, shall be not less than 65 percent and not more than 85 percent. The hysteresis shall be calculated by determining the ratio of the area between the loading and unloading portions of the force deflection curve to the area under the loading portion of the curve.

(3) The force shall be calculated by the product of the impactor mass and its deceleration.

(c) *Test procedure.* The test procedure for the thorax assembly is as follows:

(1) The test dummy is clothed in cotton-polyester-based tight-fitting shirt with long sleeves and ankle-length pants whose combined weight is not more than 0.25 kg (0.55 lbs).

(2) Soak the dummy in a controlled environment at any temperature between 20.6 and 22.2 °C (69 and 72 °F) and at any relative humidity between 10 and 70 percent for at least four hours prior to a test.

(3) Seat and orient the dummy on a seating surface without back support as shown in Figure P4, with the lower limbs extended horizontally and forward, the upper arms parallel to the torso and the lower arms extended horizontally and forward, parallel to the midsagittal plane, the midsagittal plane being vertical within ±1 degree and the ribs level in the anterior-posterior and lateral directions within ±0.5 degrees.

(4) Establish the impact point at the chest midsagittal plane so that the impact point of the longitudinal centerline of the probe coincides with the dummy's mid-sagittal plane and is centered on the center of No. 2 rib within ±2.5 mm (0.1 in.) and 0.5 degrees of a horizontal plane.

(5) Impact the thorax with the test probe so that at the moment of contact the probe's longitudinal center line is within 2 degrees of a horizontal line in the dummy's midsagittal plane.

(6) Guide the test probe during impact so that there is no significant lateral, vertical or rotational movement.

(7) No suspension hardware, suspension cables, or any other attachments to the probe, including the velocity vane, shall make contact with the dummy during the test.

[65 FR 15262, Mar. 22, 2000, as amended at 66 FR 64376, Dec. 13, 2001]

§ 572.145 Upper and lower torso assemblies and torso flexion test procedure.

(a) The test objective is to determine the resistance of the lumbar spine and abdomen of a fully assembled dummy (drawing 210–0000) to flexion articulation between upper and lower halves of the torso assembly (refer to § 572.140(a)(1)(iv)).

(b)(1) When the upper half of the torso assembly of a seated dummy is subjected to a force continuously applied at the occipital condyle level through the rigidly attached adaptor bracket in accordance with the test procedure set out in paragraph (c) of this section, the lumbar spine-abdomen assembly shall flex by an amount that permits the upper half of the torso, as measured at the posterior surface of the torso reference plane shown in Figure P5 of this subpart, to translate in angular motion in the midsagittal plane 45 ±0.5 degrees relative to the vertical transverse plane, at which time the pulling force applied must not be less than 130 N (28.8 lbf) and not more than 180 N (41.2 lbf), and

(2) Upon removal of the force, the upper torso assembly returns to within 10 degrees of its initial position.

(c) *Test procedure.* The test procedure is as follows:

(1) Soak the dummy in a controlled environment at any temperature between 18.9° and 25.6 °C (66 and 78 °F) and at any relative humidity between 10 and 70 percent for at least 4 hours prior to a test.

(2) Assemble the complete dummy (with or without the lower legs) and seat it on a rigid flat-surface table, as shown in Figure P5 of this subpart.

(i) Unzip the torso jacket and remove the four ¼–20×¾″ bolts which attach

the lumbar load transducer or its structural replacement to the pelvis weldment (drawing 210–4510) as shown in Figure P5 of this subpart.

(ii) Position the matching end of the rigid pelvis attachment fixture around the lumbar spine and align it over the four bolt holes.

(iii) Secure the fixture to the dummy with the four ¼–20×¾″ bolts and attach the fixture to the table. Tighten the mountings so that the pelvis-lumbar joining surface is horizontal within ±1 deg and the buttocks and upper legs of the seated dummy are in contact with the test surface.

(iv) Attach the loading adapter bracket to the upper part of the torso as shown in Figure P5 of this subpart and zip up the torso jacket.

(v) Point the upper arms vertically downward and the lower arms forward.

(3)(i) Flex the thorax forward three times from vertical until the torso reference plane reaches 30 ±2 degrees from vertical. The torso reference plane, as shown in figure P5 of this subpart, is defined by the transverse plane tangent to the posterior surface of the upper backplate of the spine box weldment (drawing 210–8020).

(ii) Remove all externally applied flexion forces and support the upper torso half in a vertical orientation for 30 minutes to prevent it from drooping.

(4) Remove the external support and after two minutes measure the initial orientation angle of the upper torso reference plane of the seated, unsupported dummy as shown in Figure P5 of this subpart. The initial orientation of the torso reference plane may not exceed 15 degrees.

(5) Attach the pull cable at the point of load application on the adaptor bracket while maintaining the initial torso orientation. Apply a pulling force in the midsagittal plane, as shown in Figure P5 of this subpart, at any upper torso flexion rate between 0.5 and 1.5 degrees per second, until the torso reference plane reaches 45 ±0.5 degrees of flexion relative to the vertical transverse plane.

(6) Continue to apply a force sufficient to maintain 45 ±0.5 degrees of flexion for 10 seconds, and record the highest applied force during the 10-second period.

(7) [Reserved]

(8) Release all force at the loading adaptor bracket as rapidly as possible and measure the return angle with respect to the initial angle reference plane as defined in paragraph (c)(4) of this section 3 to 4 minutes after the release.

§ 572.146 Test conditions and instrumentation.

(a) The test probe for thoracic impacts, except for attachments, shall be of rigid metallic construction and concentric about its longitudinal axis. Any attachments to the impactor such as suspension hardware, and impact vanes, must meet the requirements of § 572.144(c)(7) of this part. The impactor shall have a mass of 1.70 ±0.02 kg (3.75 ±0.05 lb) and a minimum mass moment of inertia 164 kg-cm^2 (0.145 lb-in-sec^2) in yaw and pitch about the CG of the probe. One-third (⅓) of the weight of suspension cables and any attachments to the impact probe must be included in the calculation of mass, and such components may not exceed five percent of the total weight of the test probe. The impacting end of the probe, perpendicular to and concentric with the longitudinal axis of the probe, has a flat, continuous, and non-deformable 50.8 ±0.25 mm (2.00 ±0.01 inch) diameter face with an edge radius of 7.6/12.7 mm (0.3/0.5 in). The impactor shall have a 53.3 mm (2.1 in) dia. cylindrical surface extending for a minimum of 25.4 mm (1.0 in) to the rear from the impact face. The probe's end opposite to the impact face has provisions for mounting an accelerometer with its sensitive axis collinear with the longitudinal axis of the probe. The impact probe has a free air resonant frequency not less than 1000 Hz limited to the direction of the longitudinal axis of the impactor.

(b) Head accelerometers shall have the dimensions, response characteristics, and sensitive mass locations specified in drawing SA 572–S4 and be mounted in the head as shown in drawing 210–0000.

(c) The neck force-moment transducer shall have the dimensions, response characteristics, and sensitive axis locations specified in drawing SA 572–S19 and be mounted at the upper neck transducer location as shown in

drawing 210–0000. A lower neck transducer as specified in drawing SA 572–S19 is allowed to be mounted as optional instrumentation in place of part No. ATD6204, as shown in drawing 210–0000.

(d) The shoulder force transducers shall have the dimensions and response characteristics specified in drawing SA 572–S21 and be allowed to be mounted as optional instrumentation in place of part No. 210–3800 in the torso assembly as shown in drawing 210–0000.

(e) The thorax accelerometers shall have the dimensions, response characteristics, and sensitive mass locations specified in drawing SA 572–S4 and be mounted in the torso assembly in triaxial configuration at the T4 location, as shown in drawing 210–0000. Triaxial accelerometers may be mounted as optional instrumentation at T1, and T12, and in uniaxial configuration on the sternum at the midpoint level of ribs No. 1 and No. 3 and on the spine coinciding with the midpoint level of No. 3 rib, as shown in drawing 210–0000. If used, the accelerometers must conform to SA–572–S4.

(f) The chest deflection potentiometer shall have the dimensions and response characteristics specified in drawing SA–572–S50 and be mounted in the torso assembly as shown drawing 210–0000.

(g) The lumbar spine force/moment transducer may be mounted in the torso assembly as shown in drawing 210–0000 as optional instrumentation in place of part No. 210–4150. If used, the transducer shall have the dimensions and response characteristics specified in drawing SA–572–S20.

(h) The pubic force transducer may be mounted in the torso assembly as shown in drawing 210–0000 as optional instrumentation in place of part No. 921–0022–036. If used, the transducer shall have the dimensions and response characteristics specified in drawing SA–572–S18.

(i) The acetabulum force transducers may be mounted in the torso assembly as shown in drawing 210–0000 as optional instrumentation in place of part No. 210–4522. If used, the transducer shall have the dimensions and response characteristics specified in drawing SA–572–S22.

(j) The anterior-superior iliac spine transducers may be mounted in the torso assembly as shown in drawing 210–0000 as optional instrumentation in place of part No. 210–4540–1, –2. If used, the transducers shall have the dimensions and response characteristics specified in drawing SA–572–S17.

(k) The pelvis accelerometers may be mounted in the pelvis in triaxial configuration as shown in drawing 210–0000 as optional instrumentation. If used, the accelerometers shall have the dimensions and response characteristics specified in drawing SA–572–S4.

(l) The outputs of acceleration and force-sensing devices installed in the dummy and in the test apparatus specified by this part shall be recorded in individual data channels that conform to the requirements of SAE Recommended Practice J211/1, Rev. Mar 95 ''Instrumentation for Impact Tests—Part 1-Electronic Instrumentation'' (refer to § 572.140(a)(3)), with channel classes as follows:

(1) Head acceleration—Class 1000

(2) Neck

(i) Force—Class 1000

(ii) Moments—Class 600

(iii) Pendulum acceleration—Class 180

(iv) Rotation potentiometer response (if used)—CFC 60.

(3) Thorax:

(i) Rib/sternum acceleration—Class 1000

(ii) Spine and pendulum accelerations—Class 180

(iii) Sternum deflection—Class 600

(iv) Shoulder force—Class 180

(4) Lumbar:

(i) Forces—Class 1000

(ii) Moments—Class 600

(iii) Torso flexion pulling force—Class 60 if data channel is used

(5) Pelvis

(i) Accelerations—Class 1000

(ii) Acetabulum, pubic symphysis—Class 1000,

(iii) Iliac wing forces—Class 180

(m) Coordinate signs for instrumentation polarity shall conform to the Sign Convention For Vehicle Crash Testing, Surface Vehicle Information Report, SAE J1733, 1994–12 (refer to § 572.140(a)(4)).

(n) The mountings for sensing devices shall have no resonance frequency less

than 3 times the frequency range of the applicable channel class.

(o) Limb joints shall be set at 1G, barely restraining the weight of the limbs when they are extended horizontally. The force required to move a limb segment shall not exceed 2G throughout the range of limb motion.

(p) Performance tests of the same component, segment, assembly, or fully assembled dummy shall be separated in time by a period of not less than 30 minutes unless otherwise noted.

(q) Surfaces of dummy components are not painted except as specified in this part or in drawings subtended by this part.

FIGURES TO SUBPART P OF PART 572

Figure P1

HEAD DROP TEST SET-UP SPECIFICATIONS

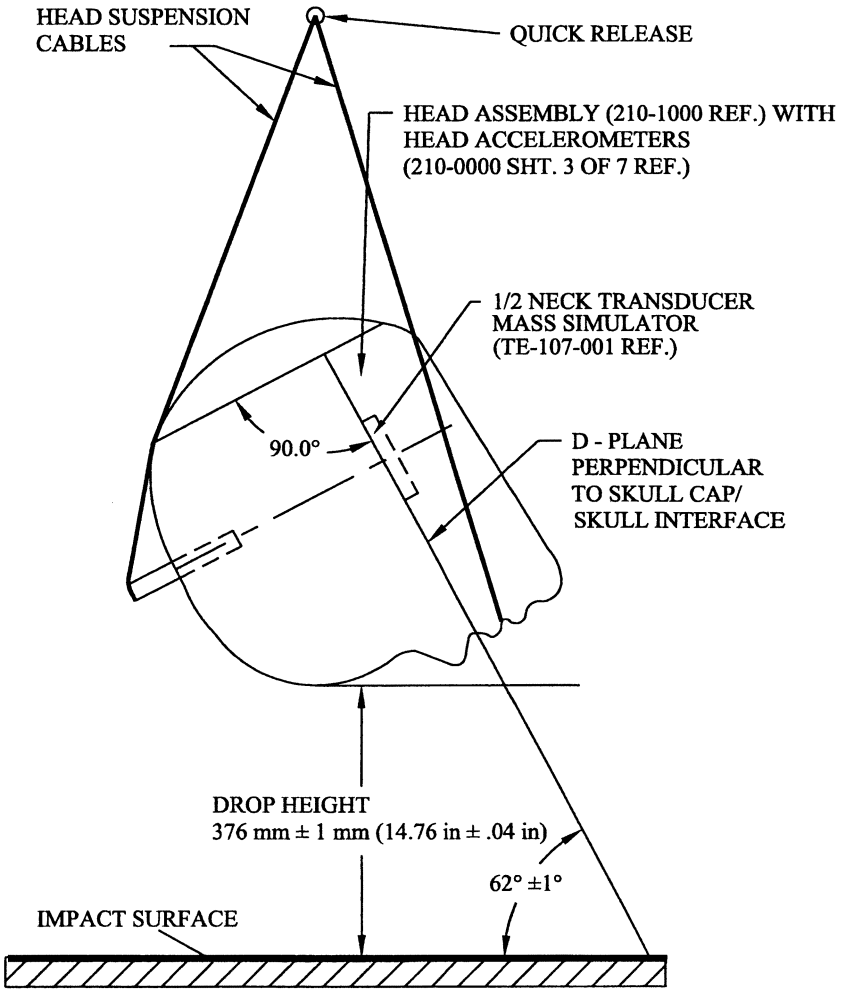

Figure P2

NECK FLEXION TEST SET-UP SPECIFICATIONS

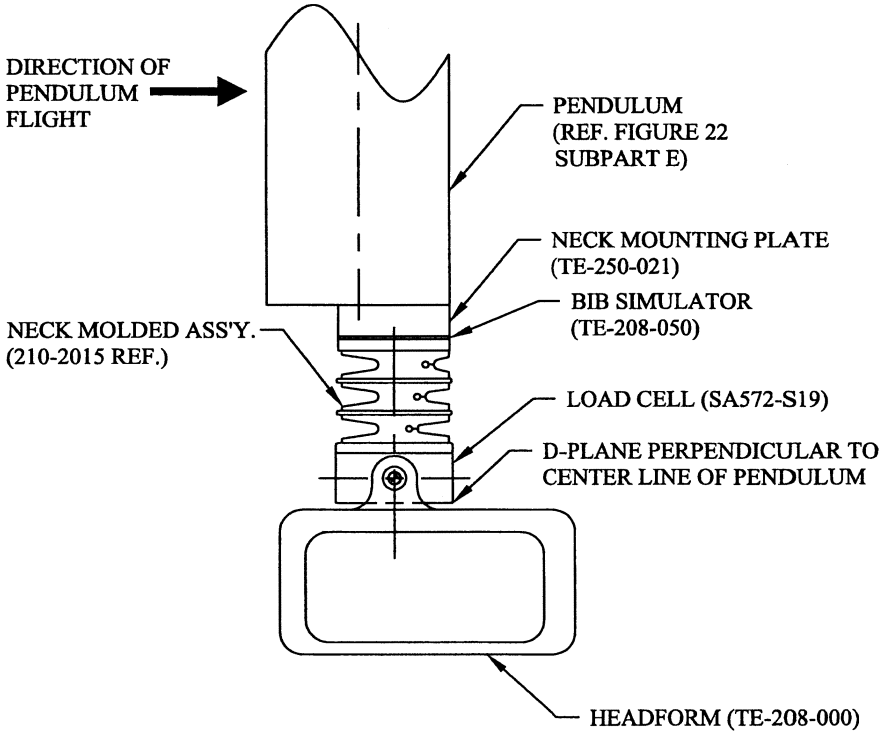

NOTE: MOUNT NECK AT LEADING EDGE OF PENDULUM TO AVOID INTERFERENCE WITH HEADFORM MOTION. PENDULUM SHOWN IN VERTICAL ORIENTATION.

Figure P3

NECK EXTENSION TEST SET-UP SPECIFICATIONS

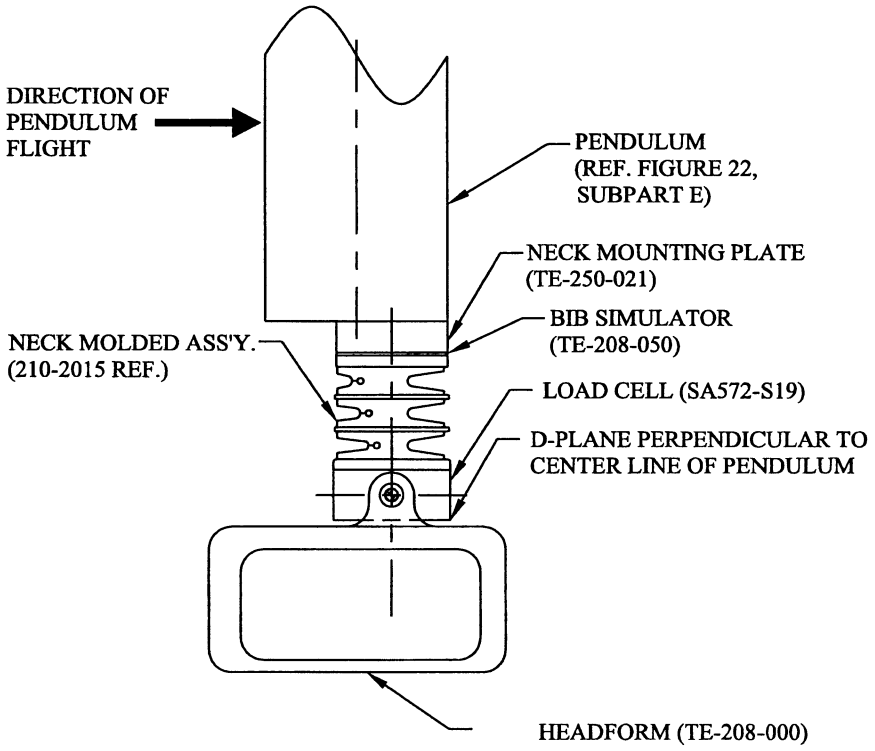

NOTE: MOUNT NECK AT LEADING EDGE OF PENDULUM TO AVOID INTERFERENCE WITH HEADFORM MOTION.
PENDULUM SHOWN IN VERTICAL ORIENTATION.

Figure P4

THORAX IMPACT TEST SET-UP SPECIFICATIONS

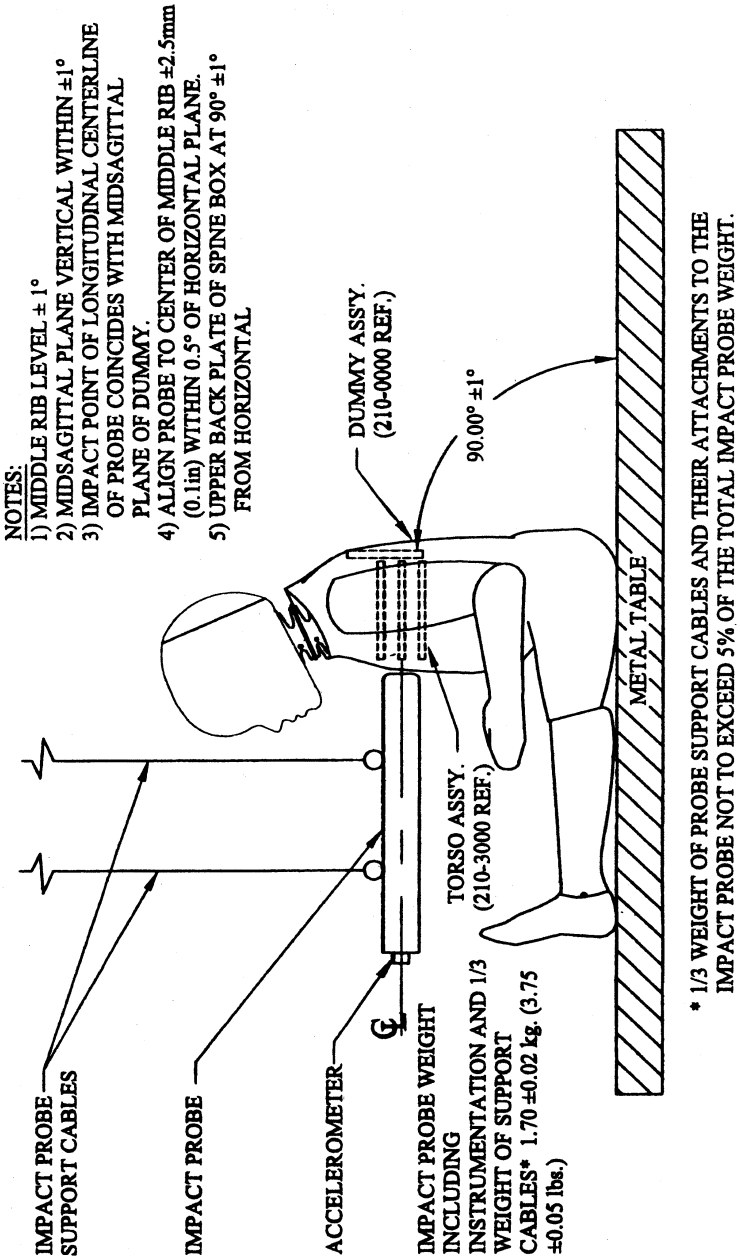

Figure P5

TORSO FLEXION TEST SET-UP SPECIFICATION

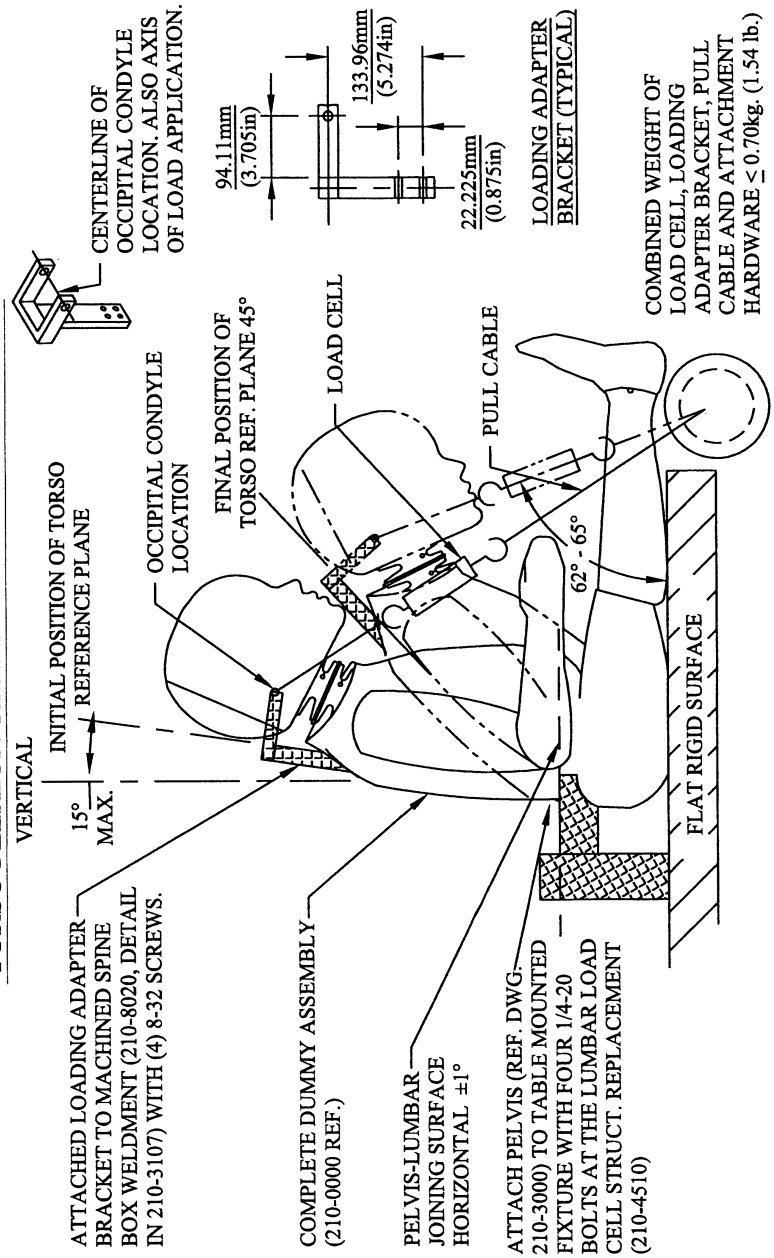

[65 FR 15262, Mar. 22, 2000, as amended at 66 FR 64376, Dec. 13, 2001]

Subpart R—CRABI 12-Month-Old Infant, Alpha Version

SOURCE: 65 FR 17188, Mar. 31, 2000, unless otherwise noted.

§ 572.150 Incorporation by reference.

(a) The following materials are incorporated by reference in this subpart R.

(1) A drawings and specifications package entitled ''Parts List and Drawings, Subpart R, CRABI 12-Month-Old Infant Crash Test Dummy (CRABI–12, Alpha version) August 2001'' and consisting of:

(i) Drawing No. 921022–001, Head Assembly, incorporated by reference in §§ 572.151, 572.152, 572.154, and 572.155;

(ii) Drawing No. 921022–041, Neck Assembly, incorporated by reference in §§ 572.151, 572.153, 572.154, and 572.155;

(iii) Drawing No. TE–3200–160, Headform, incorporated by reference in §§ 572.151 and 572.153;

(iv) Drawing No. 921022–060, Torso Assembly, incorporated by reference in §§ 572.151, 572.154, and 572.155;

(v) Drawing No. 921022–055, Leg Assembly, incorporated by reference in §§ 572.151, and 572.155 as part of a complete dummy assembly;

(vi) Drawing No. 921022–054, Arm Assembly, incorporated by reference in §§ 572.151, and 572.155 as part of the complete dummy assembly;

(2) A procedures manual entitled ''Procedures for Assembly, Disassembly and Inspection (PADI) Subpart R, CRABI 12-Month-Old Infant Crash Test Dummy (CRABI–12, Alpha version) August 2001'' incorporated by reference in § 572.155;

(3) SAE Recommended Practice J211/1, Rev. Mar95 ''Instrumentation for Impact Tests—Part 1—Electronic Instrumentation'', incorporated by reference in § 572.155;

(4) SAE J1733 1994–12 ''Sign Convention for Vehicle Crash Testing'', incorporated by reference in § 572.155.

(b) The Director of the Federal Register approved those materials incorporated by reference in accordance with 5 U.S.C. 552(a) and 1 CFR Part 51. Copies of the materials may be inspected at NHTSA's Docket Section, 400 Seventh Street S.W., room 5109, Washington, DC, or at the National Archives and Records Administration (NARA). For information on the availability of this material at NARA, call 202–741–6030, or go to: *http://www.archives.gov/federal_register/code_of_federal_regulations/ibr_locations.html.*

(c) The incorporated materials are available as follows:

(1) The drawings and specifications package referred to in paragraph (a)(1) of this section and the procedures manual referred to in paragraph (a)(2) of this section are available from Reprographic Technologies, 9000 Virginia Manor Road, Beltsville, MD 20705 (301) 419–5070.

(2) The SAE materials referred to paragraphs (a)(3) and (a)(4) of this section are available from the Society of Automotive Engineers, Inc., 400 Commonwealth Drive, Warrendale, PA 15096.

[65 FR 17188, Mar. 31, 2000, as amended at 66 FR 45784, Aug. 30, 2001]

§ 572.151 General description.

(a) The 12-month-old-infant crash test dummy is described by drawings and specifications containing the following materials:

(1) Technical drawings and specifications package 921022–000 (refer to § 572.150(a)(1)), the titles of which are listed in Table A of this section;

(2) Procedures for Assembly, Disassembly and Inspection document (PADI) (refer to § 572.150(a)(2)).

(b) The dummy consists of the component assemblies set out in the following Table A:

TABLE A

Component assembly	Drawing number
Head Assembly	921022–001.
Neck Assembly (complete)	921022–041.
Torso Assembly	921022–060.
Leg Assembly	921022–055 R&L.
Arm Assembly	921022–054 R&L.

(c) Adjacent segments of the dummy are joined in a manner such that, except for contacts existing under static conditions, there is no contact between metallic elements throughout the range of motion or under simulated crash impact conditions.

(d) The structural properties of the dummy are such that the dummy shall

conform to this Subpart in every respect before its use in any test under this chapter.

§ 572.152 Head assembly and test procedure.

(a) The head assembly (refer to § 572.150(a)(1)(i)) for this test consists of the assembly (drawing 921022–001), triaxial mount block (SA572–80), and 3 accelerometers (drawing SA572–S4).

(b) *Frontal and rear impact.* (1) Frontal impact. When the head assembly in paragraph (a) of this section is dropped from a height of 376.0 ±1.0 mm (14.8 ±0.04 in) in accordance with paragraph (c)(3)(i) of this section, the peak resultant acceleration measured at the head CG shall not be less than 100 g or more than 120 g. The resultant acceleration vs. time history curve shall be unimodal, and the oscillations occurring after the main pulse shall be less than 17 percent of the peak resultant acceleration. The lateral acceleration shall not exceed ±15 g's.

(2) *Rear impact.* When the head assembly in paragraph (a) of this section is dropped from a height of 376.0 ±1.0 mm (14.8 ±0.04 in) in accordance with paragraph (c)(3)(ii) of this section, the peak resultant acceleration measured at the head CG shall be not less than 55 g and not more than 71 g. The resultant acceleration vs. time history curve shall be unimodal, and the oscillations occurring after the main pulse shall be less than 17 percent of the peak resultant acceleration. The lateral acceleration shall not exceed ±15 g's.

(c) *Head test procedure.* The test procedure for the head is as follows:

(1) Soak the head assembly in a controlled environment at any temperature between 18.9 and 25.6 °C (66 and 78 °F) and at any relative humidity between 10 and 70 percent for at least four hours prior to a test. These temperature and humidity levels shall be maintained throughout the entire testing period specified in this section.

(2) Before the test, clean the impact surface of the head skin and the steel impact plate surface with isopropyl alcohol, trichlorethane, or an equivalent. Both impact surfaces shall be clean and dry for testing.

(3)(i) For a frontal impact test, suspend the head assembly with its midsagittal plane in vertical orientation as shown in Figure R1 of this subpart. The lowest point on the forehead is 376.0 ±1.0 mm (14.8 ±0.04 in) from the impact surface. The 3.30 mm (0.13 in) diameter holes located on either side of the dummy's head are used to ensure that the head is level with respect to the impact surface. The angle between the lower surface plane of the neck transducer mass simulator (drawing 910420–003) and the plane of the impact surface is 45 ±1 degrees.

(ii) For a rear impact test, suspend the head assembly with its midsagittal plane in vertical orientation as shown in Figure R2 of this subpart. The lowest point on the back of the head is 376.0 ±1.0 mm (14.8 ±0.04 in) from the impact surface. The 3.30 mm (0.13 in) diameter holes located on either side of the dummy's head are used to ensure that the head is level with respect to the impact surface. The angle between the lower surface plane of the neck transducer structural replacement (drawing 910420–003) and the impact surface is 90 ±1 degrees.

(4) Drop the head assembly from the specified height by a means that ensures a smooth, instant release onto a rigidly supported flat horizontal steel plate which is 50.8 mm (2 in) thick and 610 mm (24 in) square. The impact surface shall be clean, dry and have a micro finish of not less than 203.2×10^{-6} mm (8 micro inches) (RMS) and not more than 2032.0×10^{-6} mm (80 micro inches) (RMS).

(5) Allow at least 2 hours between successive tests of the head assembly at the same impact point. For head impacts on the opposite side of the head, the 30-minute waiting period specified in § 572.155(m) does not apply.

§ 572.153 Neck-headform assembly and test procedure.

(a) The neck and headform assembly (refer to §§ 572.150(a)(1)(ii) and 572.150(a)(1)(iii)) for the purposes of this test consists of parts shown in CRABI neck test assembly (drawing TE–3200–100);

(b) When the neck and headform assembly, as defined in § 572.153(a), is tested according to the test procedure in § 572.153(c), it shall have the following characteristics:

(1) *Flexion*. (i) Plane D referenced in Figure R3 of this subpart shall rotate in the direction of pre-impact flight with respect to the pendulum's longitudinal centerline not less than 75 degrees and not more than 86 degrees. Within this specified rotation corridor, the peak positive moment about the occipital condyles shall be not less than 36 N-m (26.6 ft-lbf) and not more than 45 N-m (33.2 ft-lbf).

(ii) The positive moment about the occipital condyles shall decay for the first time to 5 N-m (3.7 ft-lbf) between 60 ms and 80 ms after time zero.

(iii) The moment about the occipital condyles shall be calculated by the following formula: Moment (N-m) = My − (0.005842m) × (Fx), where My is the moment about the y-axis, Fx is the shear force measured by the neck transducer (drawing SA572 –S23) and 0.005842m is the distance from the point at which the load cell measures the force to the occipital condyle.

(2) *Extension*. (i) Plane D referenced in Figure R4 of this subpart shall rotate in the direction of preimpact flight with respect to the pendulum's longitudinal centerline not less than 80 degrees and not more than 92 degrees. Within the specified rotation corridor, the peak negative moment about the occipital condyles shall be not more than −12 Nm (−8.9 ft-lbf) and not less than −23 N-m (−17.0 ft-lbf) within the minimum and maximum rotation interval.

(ii) The negative moment about the occipital condyles shall decay for the first time to −5 Nm (−3.7 lbf-ft) between 76 ms and 90 ms after time zero.

(iii) The moment about the occipital condyles shall be calculated by the following formula: Moment (N-m) = My − (0.005842m) × (Fx), where My is the moment about the y-axis, Fx is the shear force measured by the neck transducer (drawing SA572 –S23) and 0.005842m is the distance from the point at which the load cell measures the force to the occipital condyle.

(c) *Test procedure*. (1) Soak the neck assembly in a controlled environment at any temperature between 20.6 and 22.2 °C (69 and 72 °F) and at any relative humidity between 10 and 70 percent for at least four hours prior to a test. These temperature and humidity levels shall be maintained throughout the testing period specified in this section.

(2) Torque the jam nut (drawing 9001336) on the neck cable (drawing ATD–6206) to 0.2 to 0.3 Nm (2–3 in-lbf).

(3) Mount the neck-headform assembly, defined in paragraph (b) of this section, on the pendulum so the midsagittal plane of the headform is vertical and coincides with the plane of motion of the pendulum as shown in Figure R3 for flexion and Figure R4 for extension tests.

(i) The moment and rotation data channels are defined to be zero when the longitudinal centerline of the neck and pendulum are parallel.

(ii) The test shall be conducted without inducing any torsion of the neck.

(4) Release the pendulum and allow it to fall freely to achieve an impact velocity of 5.2 ±0.1 m/s (17.1 ±0.3 ft/s) for flexion and 2.5 ±0.1 m/s (8.2 ±0.3 ft/s) for extension measured at the center of the pendulum accelerometer at the instant of contact with the honeycomb.

(i) Time-zero is defined as the time of initial contact between the pendulum striker plate and the honeycomb material. The pendulum data channel shall be defined to be zero at this time.

(ii) Stop the pendulum from the initial velocity with an acceleration vs. time pulse which meets the velocity change as specified in the following table. Integrate the pendulum acceleration data channel to obtain the velocity vs. time curve as indicated in Table B:

TABLE B—PENDULUM PULSE

Time	Flexion		Time	Extension	
m/s	m/s	ft/s	ms	m/s	ft/s
10	1.6–2.3	5.2–7.5	6	0.8–1.2	2.6–3.9
20	3.4–4.2	11.2–13.8	10	1.5–2.1	4.9–6.9
25	4.3–5.2	14.1–17.1	14	2.2–2.9	7.2–9.5

§ 572.154 Thorax assembly and test procedure.

(a) Thorax Assembly (refer to § 572.150(a)(1)(iv)) . The thorax consists of the part of the torso assembly shown in drawing 921022–060.

(b) When the thorax of a completely assembled dummy (drawing 921022–000) is impacted by a test probe conforming to § 572.155(a) at 5.0 ±0.1m/s (16.5 ±0.3 ft/s) according to the test procedure in paragraph (c) of this section, the peak force, measured by the impact probe in accordance with paragraph § 572.155(a), shall be not less than 1514 N (340.7 lbf) and not more than 1796 N (404.1 lbf).

(c) *Test procedure.* (1) Soak the dummy in a controlled environment at any temperature between 20.6 and 22.2 °C (69 and 72 °F) and at any relative humidity between 10 and 70 percent for at least four hours prior to a test. These temperature and humidity levels shall be maintained throughout the entire testing period specified in this section.

(2) The test dummy is clothed in a cotton-polyester based tight fitting sweat shirt with long sleeves and ankle long pants whose combined weight is not more than 0.25 kg (.55 lbs).

(3) Seat and orient the dummy on a level seating surface without back support as shown in Figure R5 of this subpart, with the lower limbs extended forward, parallel to the midsagittal plane and the arms 0 to 5 degrees forward of vertical. The dummy's midsagittal plane is vertical within ±/1 degree and the posterior surface of the upper spine box is aligned at 90 ±/1 degrees from the horizontal. (Shim material may be used under the upper legs to maintain the dummy's specified spine box surface alignment).

(4) Establish the impact point at the chest midsagittal plane so that the impact point of the longitudinal centerline of the probe coincides with the dummy's midsagittal plane, is centered on the torso 196 ±/2.5 mm (7.7 ±/0.1 in) vertically from the plane of the seating surface, and is within 0.5 degrees of a horizontal plane.

(5) Impact the thorax with the test probe so that at the moment of contact the probe's longitudinal center line falls within 2 degrees of a horizontal line in the dummy's midsagittal plane.

(6) Guide the test probe during impact so that there is no significant lateral, vertical or rotational movement.

(7) No suspension hardware, suspension cables, or any other attachments to the probe, including the velocity vane, shall make contact with the dummy during the test.

[65 FR 17188, Mar. 31, 2000, as amended at 66 FR 45784, Aug. 30, 2001]

§ 572.155 Test conditions and instrumentation.

(a) The test probe for thoracic impacts, except for attachments, shall be of rigid metallic construction and concentric about its longitudinal axis. Any attachments to the impactor, such as suspension hardware, impact vanes, etc., must meet the requirements of § 572.154(c)(7). The impactor shall have a mass of 2.86 ±0.02 kg (6.3 ±0.05 lbs) and a minimum mass moment of inertia of 164 kg-cm^2 (0.145 lb-in-sec^2) in yaw and pitch about the CG of the probe. One-third of the weight of suspension cables and any attachments to the impact probe must be included in the calculation of mass, and such components may not exceed five percent of the total weight of the test probe. The impacting end of the probe, perpendicular to and concentric with the longitudinal axis of the probe, has a flat, continuous, and non-deformable 101.6 ±0.25 mm (4.00 ±0.01 in) diameter face with an edge radius of 7.6/12.7 mm (0.3/0.5 in). The impactor shall have a 101–103 mm (4–4.1 in) diameter cylindrical surface extending for a minimum of 12.5 mm (0.5 in) to the rear from the impact face. The probe's end opposite to the impact face has provisions for mounting an accelerometer with its sensitive axis collinear with the longitudinal axis of the probe. The impact probe shall have a free air resonant frequency of not less than 1000 Hz measured in line with the longitudinal axis of the impactor, using the test method shown in the Procedures for Assembly, Disassembly and Inspection (PADI) document referenced in § 572.151.

(b) Head accelerometers shall have the dimensions, response characteristics, and sensitive mass locations specified in drawing SA572–S4 and be mounted in the head as shown in drawing 921022–000.

(c) The neck force-moment transducer shall have the dimensions, response characteristics, and sensitive axis locations specified in drawing SA572–S23 and shall be mounted for testing as shown in drawing 921022–000 and in figures R3 and R4 of this subpart.

(d) The shoulder force transducers shall have the dimensions and response characteristics specified in drawing SA572–S25 and are allowed to be mounted as optional instrumentation in place of part No. 921022–022 in the torso assembly as shown in drawing 921022–000.

(e) The thorax accelerometers shall have the dimensions, response characteristics, and sensitive mass locations specified in drawing SA572–S4 and be mounted in the torso assembly in triaxial configuration as shown in drawing 921022–000.

(f) The lumbar spine and lower neck force/moment transducer shall have the dimensions and response characteristics specified in drawing SA572–S23 and are allowed to be mounted as optional instrumentation in the torso assembly in place of part No. 910420–003 as shown in drawing 921022–000.

(g) The pelvis accelerometers shall have the dimensions, response characteristics, and sensitive mass locations specified in drawing SA572–S4 and are allowed to be mounted as optional instrumentation in the pelvis in triaxial configuration as shown in drawing 921022–000.

(h) The pubic force transducer shall have the dimensions and response characteristics specified in drawing SA572–S24 and is allowed to be mounted as optional instrumentation in place of part No. 921022–050 in the torso assembly as shown in drawing 921022–000.

(i) The outputs of acceleration and force-sensing devices installed in the dummy and in the test apparatus specified by this part are recorded in individual data channels that conform to the requirements of SAE Recommended Practice J211/1, Rev. Mar95 ''Instrumentation for Impact Tests—Part 1—Electronic Instrumentation'' (refer to § 572.150(a)(3)), with channel classes as follows:

(1) Head and headform acceleration—Class 1000.

(2) Neck :

(i) Forces—Class 1000;

(ii) Moments—Class 600;

(iii) Pendulum acceleration—Class 180;

(iv) Rotation potentiometer response (if used)—CFC 60.

(3) Thorax:

(i) Spine and pendulum accelerations—Class 180;

(ii) Shoulder forces—Class 600;

(4) Lumbar:

(i) Forces—Class 1000;

(ii) Moments—Class 600;

(5) Pelvis:

(i) Accelerations—Class 1000;

(ii) Pubic—Class 1000.

(j) Coordinate signs for instrumentation polarity shall conform to SAE J1733, 1994–12, ''Sign Convention For Vehicle Crash Testing, Surface Vehicle Information Report,'' (refer to § 572.150(a)(4)).

(k) The mountings for sensing devices shall have no resonance frequency within a range of 3 times the frequency range of the applicable channel class.

(l) Limb joints shall be set at 1 g, barely restraining the weight of the limb when it is extended horizontally. The force required to move a limb segment shall not exceed 2 g throughout the range of limb motion.

(m) Performance tests of the same component, segment, assembly, or fully assembled dummy shall be separated in time by period of not less than 30 minutes unless otherwise noted.

(n) Surfaces of dummy components may not be painted except as specified in this subpart or in drawings referenced in § 572.150.

[65 FR 17188, Mar. 31, 2000, as amended at 66 FR 45784, Aug. 30, 2001]

FIGURES TO SUBPART R OF PART 572

Figure R 1
FRONTAL HEAD DROP TEST SET-UP SPECIFICATIONS

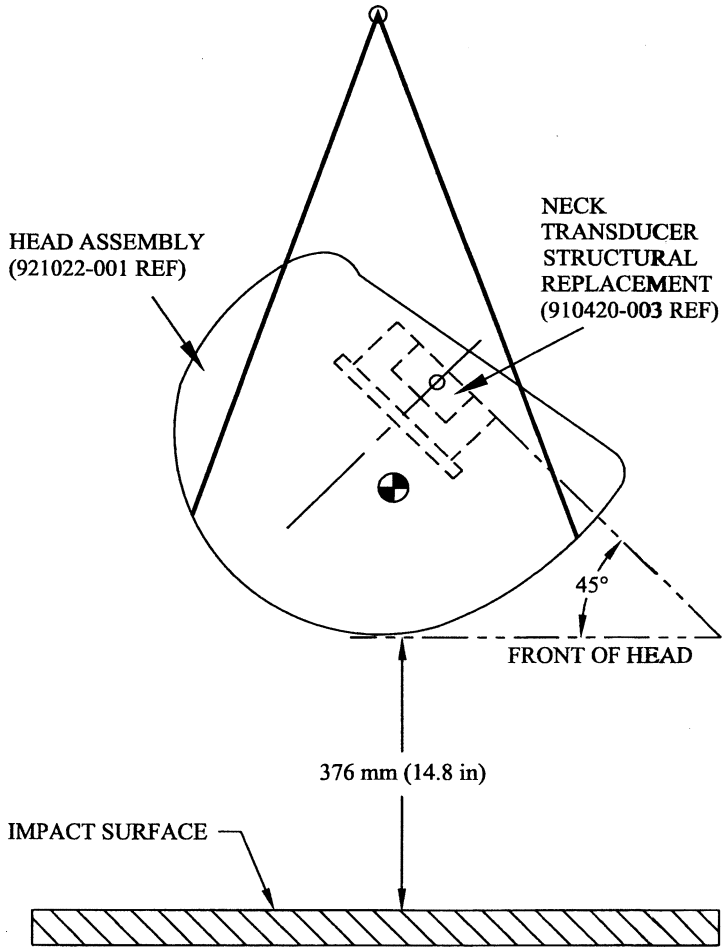

Figure R 2
REAR HEAD DROP TEST SET-UP SPECIFICATIONS

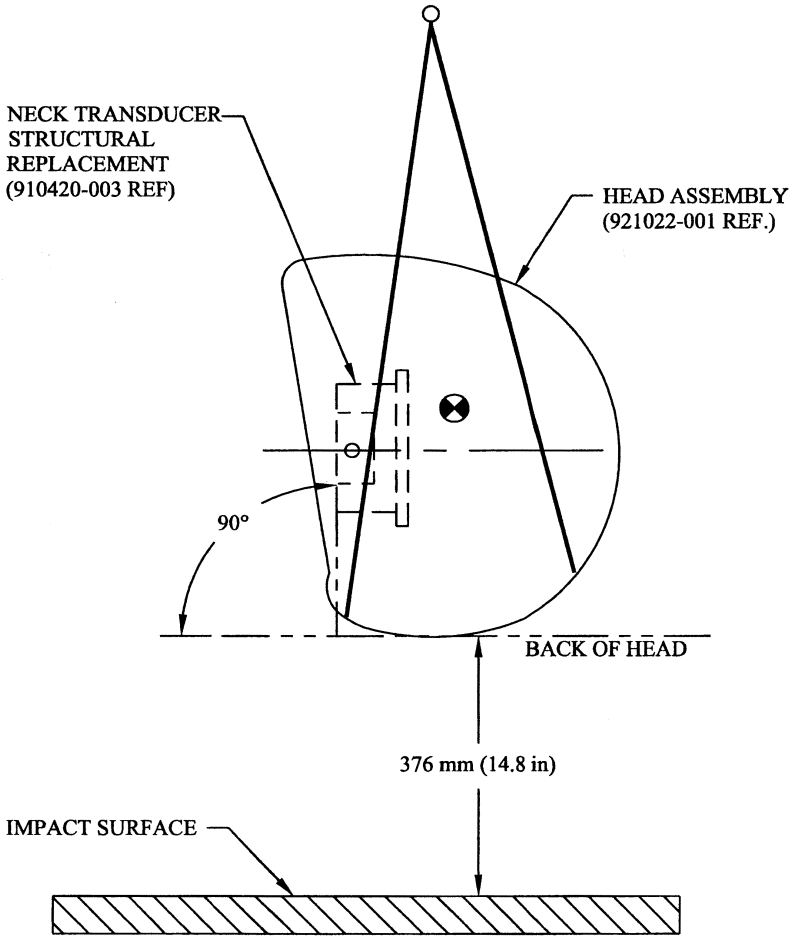

Figure R3
NECK FLEXION TEST SET-UP SPECIFICATIONS

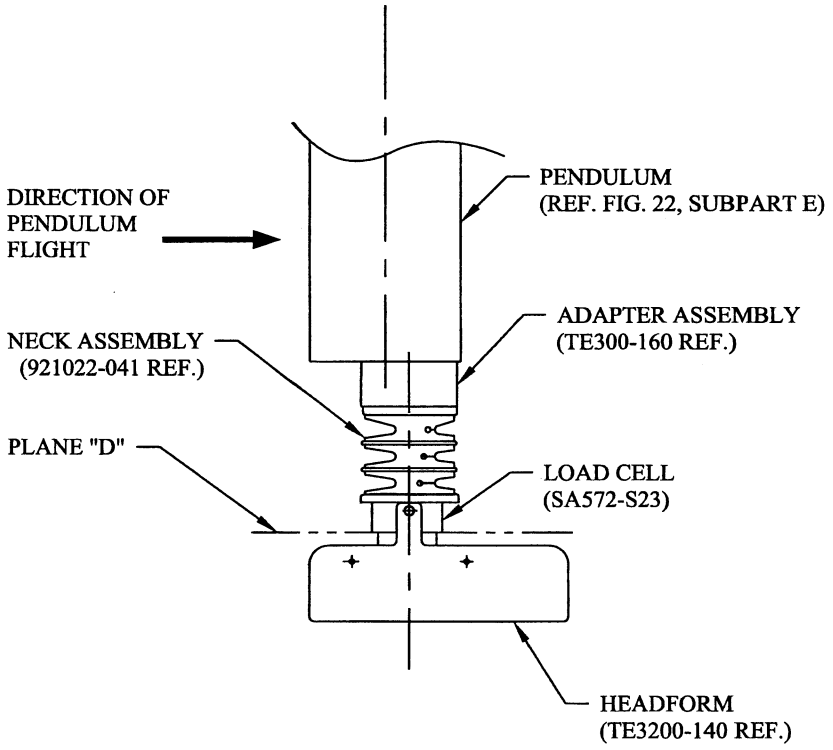

NOTE: MOUNT NECK AT LEADING EDGE OF PENDULUM TO AVOID INTERFERENCE.

Figure R4
NECK EXTENSION TEST SET-UP SPECIFICATIONS

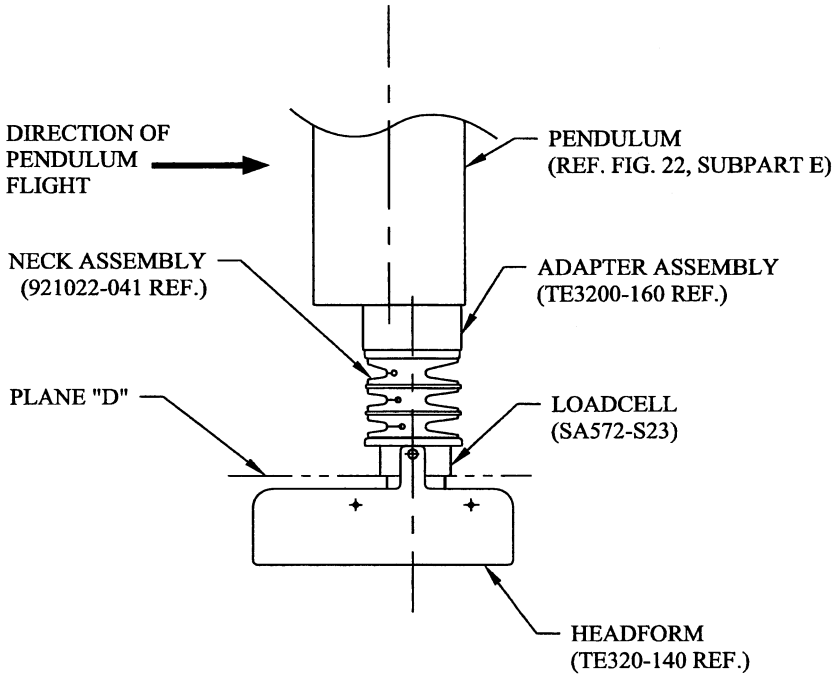

NOTE: MOUNT NECK AT LEADING EDGE OF PENDULUM TO AVOID INTERFERENCE.

Figure R 5
THORAX IMPACT TEST SET-UP SPECIFICATIONS

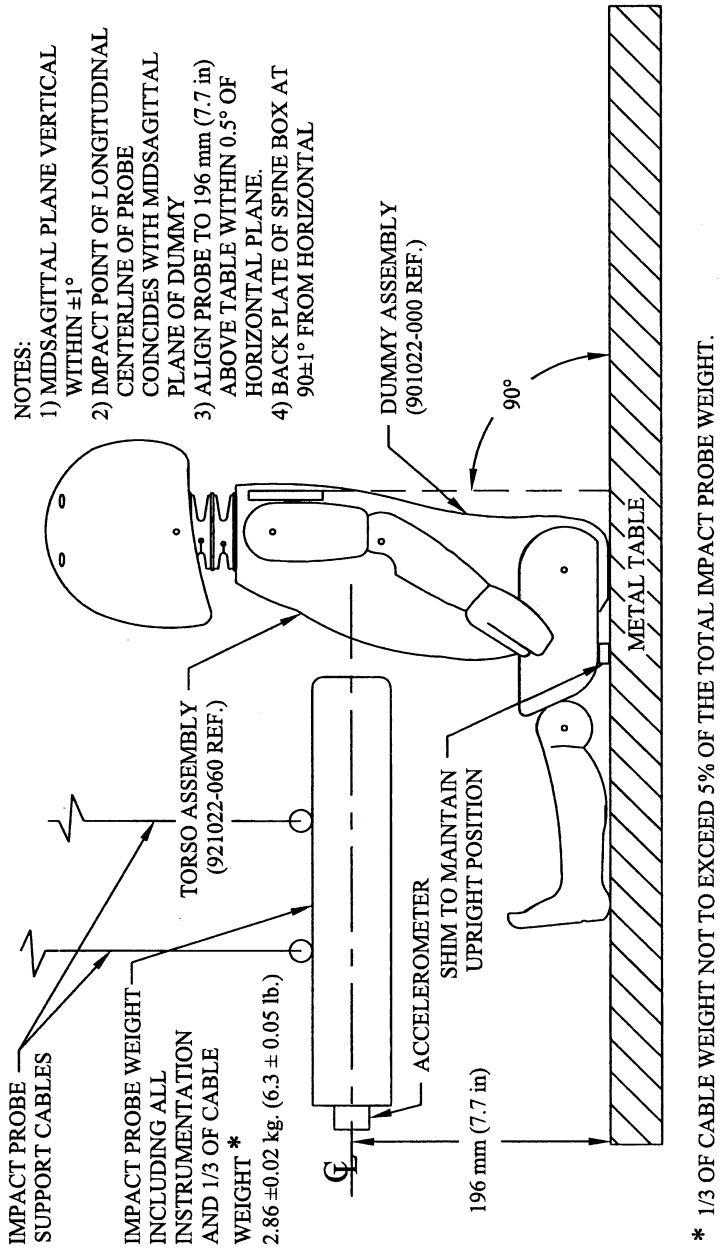

Subpart S—Hybrid III Six-Year-Old Weighted Child Test Dummy

SOURCE: 69 FR 42602, July 16, 2004, unless otherwise noted.

§ 572.160 Incorporation by reference.

(a) The following materials are hereby incorporated into this subpart S by reference:

(1) A drawings and specifications package entitled ''Parts List and Drawings, Part 572 Subpart S, Hybrid III Weighted Six-Year Old Child Test Dummy (H-III6CW, Alpha Version) April 13, 2004'', incorporated by reference in § 572.161 and consisting of:

(i) Drawing No. 167–0000, Complete Assembly, incorporated by reference in § 572.161;

(ii) Drawing No. 167–2000, Upper Torso Assembly, incorporated by reference in §§ 572.161, 572.164, and 572.165 as part of a complete dummy assembly;

(iii) Drawing No. 167–2020 Revision A, dated December 8, 2005, Spine Box Weight, incorporated by reference in §§ 572.161 and 572.165 as part of a complete dummy assembly;

(iv) Drawing No. 167–3000, Lower Torso Assembly, incorporated by reference in §§ 572.161, and 572.165 as part of a complete dummy assembly;

(v) Drawing No. 167–3010 Revision A, dated December 8, 2005, Lumbar Weight Base, incorporated by reference in §§ 572.161 and 572.165 as part of a complete dummy assembly; and

(vi) The Hybrid III Weighted Six-Year-Old Child Parts/Drawing List, incorporated by reference in § 572.161.

(2) A procedures manual entitled ''Procedures for Assembly, Disassembly, and Inspection (PADI) of the Hybrid III Six-Year-Old Weighted Child Test Dummy (H-III6CW), April 2004,'' incorporated by reference in § 572.161;

(3) The Director of the Federal Register approved those materials incorporated by reference in accordance with 5 U.S.C. 552(a) and 1 CFR part 51. Copies of the materials may be inspected at NHTSA's Technical Reference Library, 400 Seventh Street, SW., room 5109, Washington, DC, or at the National Archives and Records Administration (NARA). For information on the availability of this material at NARA, call 202–741–6030, or go to: *http://www.archives.gov/federal_register/code_of_federal_regulations/ibr_locations.html.*

(b) The incorporated materials are available as follows:

(1) The Drawings and Specifications for the Hybrid III Six-Year-Old Weighted Child Test Dummy referred to in paragraph (a)(1) of this section are available in electronic format through the NHTSA docket center and in paper format from Leet-Melbrook, Division of New RT, 18810 Woodfield Road, Gaithersburg, MD 20879, (301) 670–0090.

(2) [Reserved]

[69 FR 42602, July 16, 2004, as amended at 70 FR 77338, Dec. 30, 2005]

§ 572.161 General description.

(a) The Hybrid III Six-Year-Old Weighted Child Test Dummy is defined by drawings and specifications containing the following materials:

(1) ''Parts List and Drawings, Part 572 Subpart S, Hybrid III Weighted Six-Year Old Child Test Dummy (H-III6CW, Alpha Version) April 13, 2004'' (incorporated by reference, see § 572.160),

(2) The head, neck, arm, and leg assemblies specified in 49 CFR 572 subpart N; and

(3) ''Procedures for Assembly, Disassembly, and Inspection (PADI) of the Hybrid III Six-Year-Old Weighted Child Test Dummy, April 2004'' (incorporated by reference, see § 572.160).

TABLE A

Component assembly [1]	Drawing No.
Complete assembly	167–0000.
Upper torso assembly	167–2000.
Spine box weight	167–2020 Rev. A.
Lower torso assembly	167–3000.
Lumbar weight base	167–3010 Rev. A.

[1] Head, neck, arm, and leg assemblies are as specified in 49 CFR 572 subpart N.

(b) Adjacent segments are joined in a manner such that except for contacts existing under static conditions, there is no contact between metallic elements throughout the range of motion or under simulated crash impact conditions.

(c) The structural properties of the dummy are such that the dummy must conform to Subpart S in every respect and Subpart N as applicable, before use

in any test similar to those specified in Standard 208, ''Occupant Crash Protection'' (49 CFR 571.208), and Standard 213, ''Child Restraint Systems'' (49 CFR 571.213).

[69 FR 42602, July 16, 2004, as amended at 70 FR 77338, Dec. 30, 2005]

§ 572.162 Head assembly and test procedure.

The head assembly is assembled and tested as specified in 49 CFR 572.122 (Subpart N).

§ 572.163 Neck assembly and test procedure.

The neck assembly is assembled and tested as specified in 49 CFR 572.123 (Subpart N).

§ 572.164 Thorax assembly and test procedure.

(a) *Thorax (upper torso) assembly*. The thorax consists of the part of the torso assembly shown in drawing 167–2000 (incorporated by reference, see § 572.160).

(b) When the anterior surface of the thorax of a completely assembled dummy (drawing 167–2000) that is seated as shown in Figure S1 is impacted by a test probe conforming to 49 CFR 572.127(a) at 6.71 ±0.12 m/s (22.0 ±0.4 ft/s) according to the test procedure specified in 49 CFR 572.124(c):

(1) The maximum sternum displacement relative to the spine, measured with chest deflection transducer (specified in 49 CFR 572.124(b)(1)), must be not less than 38.0 mm (1.50 in) and not more than 46.0 mm (1.80 in). Within this specified compression corridor, the peak force, measured by the probe in accordance with 49 CFR 572.127, must be not less than 1205 N (270.9 lbf) and not more than 1435 N (322.6 lbf). The peak force after 12.5 mm (0.5 in) of sternum displacement, but before reaching the minimum required 38.0 mm (1.46 in) sternum displacement limit, must not exceed an upper limit of 1500 N.

(2) The internal hysteresis of the ribcage in each impact as determined by the plot of force vs. deflection in paragraph (b)(1) of this section must be not less than 65 percent but not more than 85 percent.

(c) *Test procedure*. The thorax assembly is tested as specified in 49 CFR 572.124(c).

§ 572.165 Upper and lower torso assemblies and torso flexion test procedure.

(a) *Upper/lower torso assembly*. The test objective is to determine the stiffness effects of the lumbar spine (specified in 49 CFR 572.125(a)), including cable (specified in 49 CFR 572.125(a)), mounting plate insert (specified in 49 CFR 572.125(a)), nylon shoulder bushing (specified in 49 CFR 572.125(a)), nut (specified in 49 CFR 572.125(a)), spine box weighting plates (drawing 167–2020 Revision A), lumbar base weight (drawing 167–3010 Revision A), and abdominal insert (specified in 49 CFR 572.125(a)), on resistance to articulation between the upper torso assembly (drawing 167–2000) and the lower torso assembly (drawing 167–3000). Drawing Nos. 167–2000, 167–2020 Revision A, 167–3000, and 167–3010 Revision A, are incorporated by reference, see § 572.160.

(b)(1) When the upper torso assembly of a seated dummy is subjected to a force continuously applied at the head to neck pivot pin level through a rigidly attached adaptor bracket as shown in Figure S2 according to the test procedure set out in 49 CFR 572.125(c), the lumbar spine-abdomen assembly must flex by an amount that permits the upper torso assembly to translate in angular motion until the machined surface of the instrument cavity at the back of the thoracic spine box is at 45 ± 0.5 degrees relative to the transverse plane, at which time the force applied as shown in Figure S2 must be within 88.6 N ± 25 N (20.0 lbf ± 5.6 lbf), and

(2) Upon removal of the force, the torso assembly must return to within 9 degrees of its initial position.

(c) *Test procedure*. The upper and lower torso assemblies are tested as specified in 49 CFR 572.125(c), except that in paragraph (c)(5) of that section, the initial torso orientation angle may not exceed 32 degrees.

[69 FR 42602, July 16, 2004, as amended at 70 FR 77338, Dec. 30, 2005]

§ 572.166 Knees and knee impact test procedure.

The knee assembly is assembled and tested as specified in 49 CFR 572.126 (Subpart N).

§ 572.167 Test conditions and instrumentation.

The test conditions and instrumentation are as specified in 49 CFR 572.127 (Subpart N).

FIGURES TO SUBPART S OF PART 572

FIGURE S1

THORAX IMPACT TEST SET-UP SPECIFICATIONS

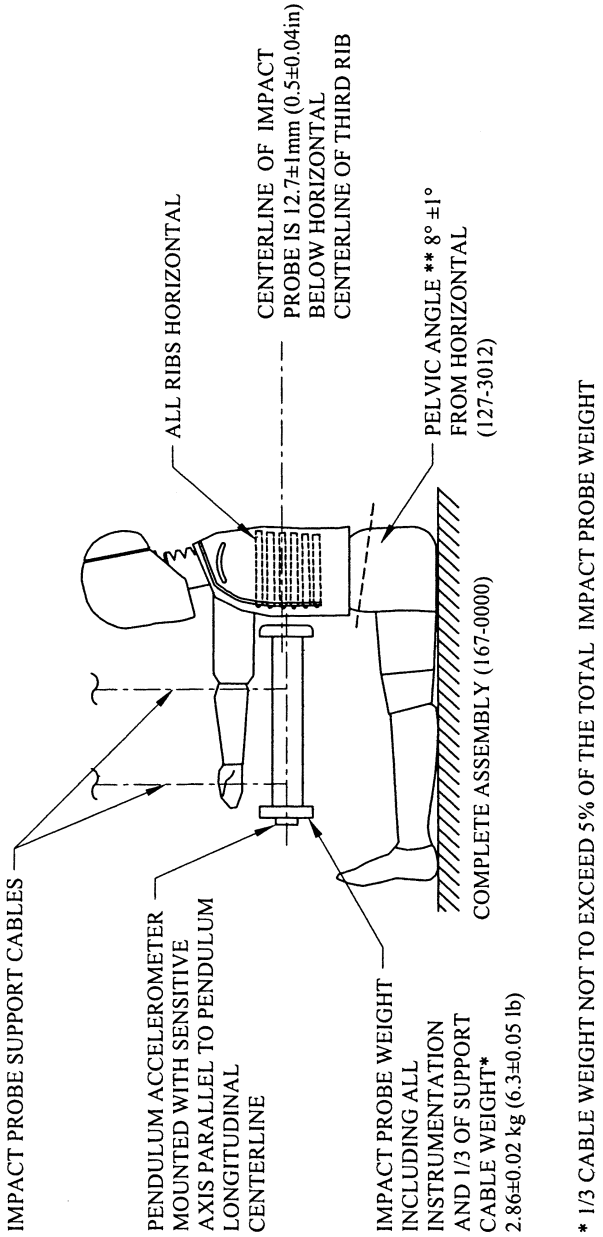

* 1/3 CABLE WEIGHT NOT TO EXCEED 5% OF THE TOTAL IMPACT PROBE WEIGHT

** PELVIS LUMBAR JOINING SURFACE
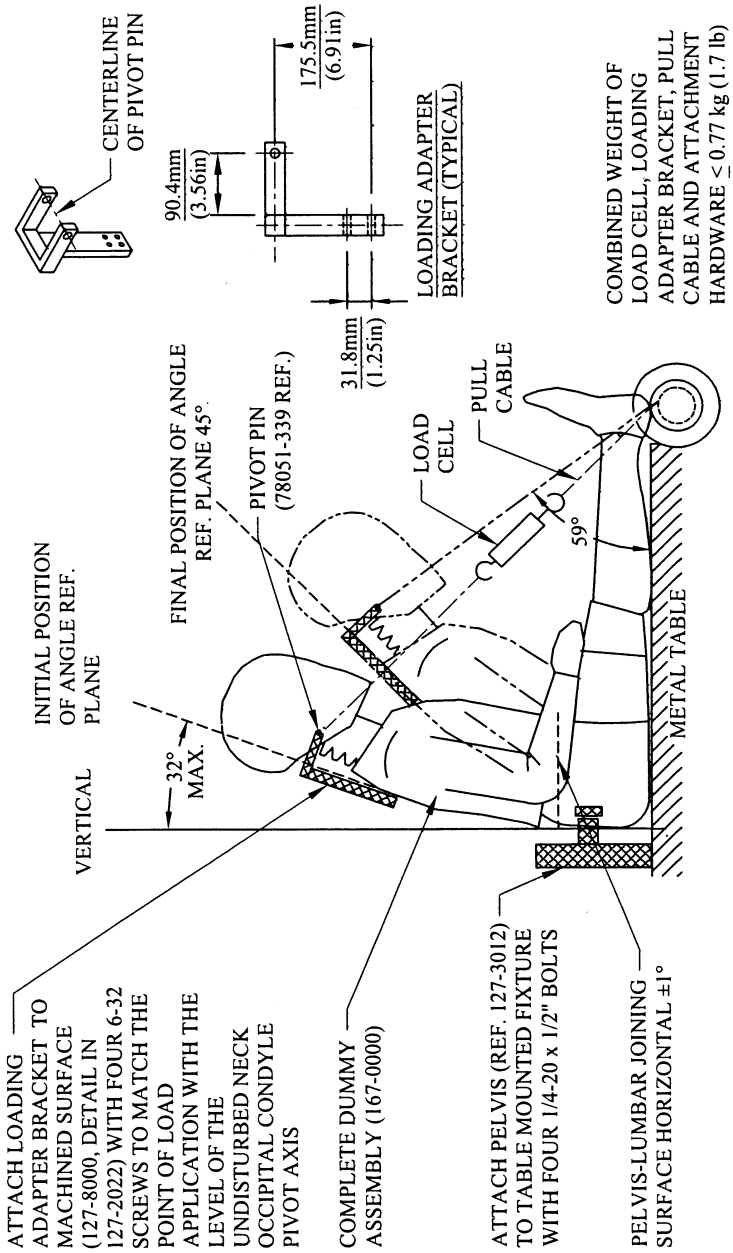
FIGURE S2
TORSO FLEXION TEST SET-UP SPECIFICATIONS